FOREWORD

This manual contains maintenance and repair procedures for the 1996 TOYOTA TACOMA.

Applicable models:
RZN140, 150, 161, 171 series
VZN150, 160, 170 series

The manual is divided into 21 sections with a thumb index for each section at the edge of the pages.

Please note that the publications below have also been prepared as relevant service manuals for the components and systems in this vehicle.

Manual Name	Pub. No.
• A43D Automatic Transmission Repair Manual (Nov. 1993)	RM387U
• A340E, A340F, A340H Automatic Transmission Repair Manual (Nov. 1993)	RM391U
• A340F, A343F Automatic Transmission Repair Manual (Sep. 1995)	RM479U
• 1996 Toyota Tacoma Electrical Wiring Diagram	EWD246U
• 1996 Model TOYOTA New Car Features	NCF120U

All information in this manual is based on the latest product information at the time of publication. However, specifications and procedures are subject to change without notice.

TOYOTA MOTOR CORPORATION

©2000 TOYOTA MOTOR CORPORATION
All rights reserved. This book may not be reproduced or copied, in whole or in part, without the written permission of Toyota Motor Corporation.
First Printing: Jul. 14, 1995 01-950714-00
Sixth Printing: Feb. 28, 2000 06-000228-01-2

CAUTION

This manual does not include all the necessary items about repair and service. this manual is made for the purpose of the use for the persons who have special techniques and certifications. In the cases that non–specialized or uncertified technicians perform repair or service only using this manual or without proper equipment or tool, that may cause severe injury to you or other people around and also cause damage to your customer's vehicle.

In order to prevent dangerous operation and damages to your customer's vehicle, be sure to follow the instruction shown below.

- Must read this manual thoroughly. It is especially important to have good understanding all the contents written in the PRECAUTION of "IN" section.
- The service method written in this manual is very effective to perform repair and service. When performing the operations following the procedures using this manual, be sure to use tools specified and recommended. If using non–specified or recommended tools and service method, be sure to confirm safety of the technicians and any possibility of causing personal injury or damage to the customer's vehicle before starting the operation.
- If part replacement is necessary, must replace the part with the same part number or equivalent part. Do not replace it with inferior quality.
- It is important to note that this manual contains various "Cautions" and "Notices" that must be carefully observed in order to reduce the risk of personal injury during service or repair, or the possibility that improper service or repair may damage the vehicle or render it unsafe. It is also important to understand that these "Cautions" and "Notices" are not exhaustive, because it is important to warn of all the possible hazardous consequences that might result from failure to follow these instructions.

INTRODUCTION IN
MAINTENANCE MA
2RZ-FE, 3RZ-FE ENGINE EG
5VZ-FE ENGINE EG
IGNITION SYSTEM IG
STARTING SYSTEM ST
CHARGING SYSTEM CH
CLUTCH CL
W59 MANUAL TRANSMISSION MT
R150, R150F MANUAL TRANSMISSION MT
A43D AUTOMATIC TRANSMISSION AT
A340E, A340F AUTOMATIC TRANSMISSION AT
TRANSFER TR
PROPELLER SHAFT PR
SUSPENSION AND AXLE SA
BRAKE SYSTEM BR
STEERING SR
SUPPLEMENTAL RESTRAINT SYSTEM RS
BODY ELECTRICAL SYSTEM BE
BODY BO
AIR CONDITIONING SYSTEM AC

INTRODUCTION

HOW TO USE THIS MANUAL ..... IN– 2
IDENTIFICATION INFORMATION ..... IN– 4
GENERAL REPAIR INSTRUCTIONS ..... IN– 5
PRECAUTION ..... IN– 8
HOW TO TROUBLESHOOT ECU CONTROLLED SYSTEM ..... IN– 13
VEHICLE LIFT AND SUPPORT LOCATIONS ..... IN– 30
ABBREVIATIONS USED IN THIS MANUAL ..... IN– 31
GLOSSARY OF SAE AND TOYOTA TERMS ..... IN– 33
STANDARD BOLT TORQUE SPECIFICATIONS ..... IN– 36

HOW TO USE THIS MANUAL

INDEX

IN02E-01

An INDEX is provided on the first page of each section to guide you to the item to be repaired. To assist you in finding your way through the manual, the Section Title and major heading are given at the top of every page.

IN

GENERAL DESCRIPTION

IN02G-01

At the beginning of each section, a general Description is given that pertains to all repair operations contained in that section.
Read these precautions before starting any repair task.

TROUBLESHOOTING

IN02H-0C

TROUBLESHOOTING tables are included for each system to help you diagnose the problem and find the cause. The fundamentals of how to proceed with troubleshooting are described on page IN–13. Be sure to read this before performing troubleshooting.

PREPARATION

IN02J-01

Preparation lists the SST (Special Service Tools), recommended tools, equipment, lubricant and SSM (Special Service Materials) which should be prepared before beginning the operation and explains the purpose of each one.

REPAIR PROCEDURES

IN02K-01

Most repair operations begin with an overview illustration. It identifies the components and shows how the parts fit together.
Example:

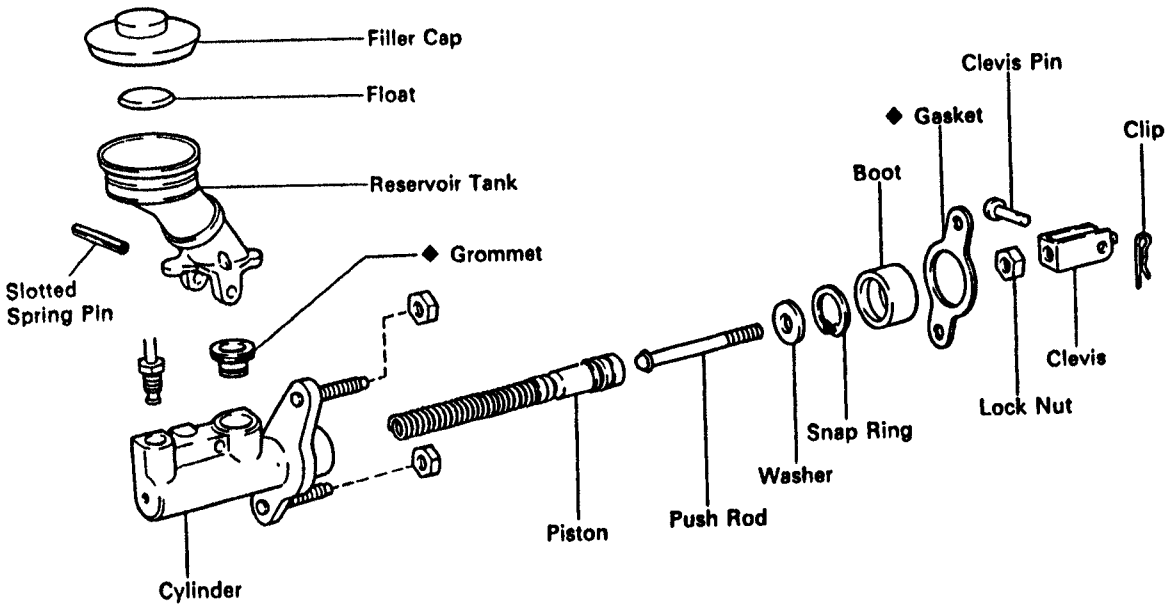

◆ Non-reusable part

N11306

The procedures are presented in a step–by–step format:

- The illustration shows what to do and where to do it.
- The task heading tells what to do.
- The detailed text tells how to perform the task and gives other information such as specifications and warnings.

Example:

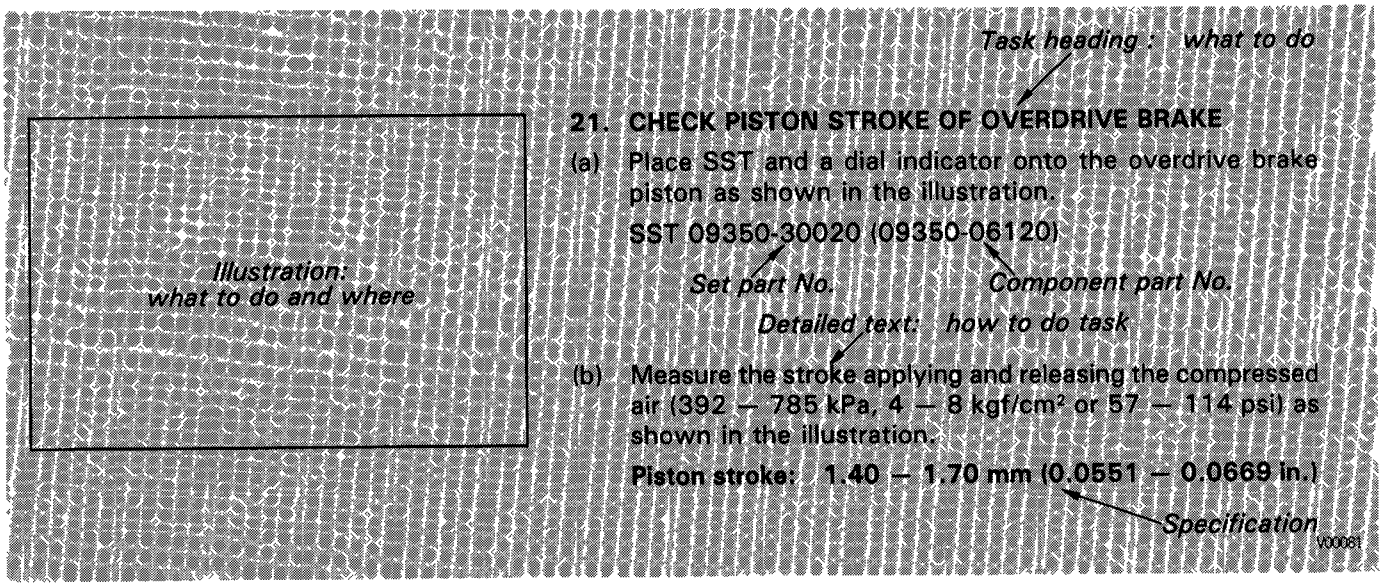

This format provides the experienced technician with a FAST TRACK to the information needed. The upper case task heading can be read at a glance when necessary, and the text below it provides detailed information. Important specifications and warnings always stand out in bold type.

IN02L–01

REFERENCES

References have been kept to a minimum. However, when they are required you are given the page to refer to.

IN02M–01

SPECIFICATIONS

Specifications are presented in bold type throughout the text where needed. You never have to leave the procedure to look up your specifications. They are also found at the end of each section, for quick reference.

CAUTIONS, NOTICES, HINTS:

IN02N-01

- CAUTIONS are presented in bold type, and indicate there is a possibility of injury to you or other people.
- NOTICES are also presented in bold type, and indicate the possibility of damage to the components being repaired.
- HINTS are separated from the text but do not appear in bold. They provide additional information to help you perform the repair efficiently.

IN

SI UNIT

IN02P-02

The UNITS given in this manual are primarily expressed according to the SI UNIT (International System of Unit), and alternately expressed in the metric system and in the English System.

Example:

Torque: 30 N·m (310 kgf·cm, 22 ft·lbf)

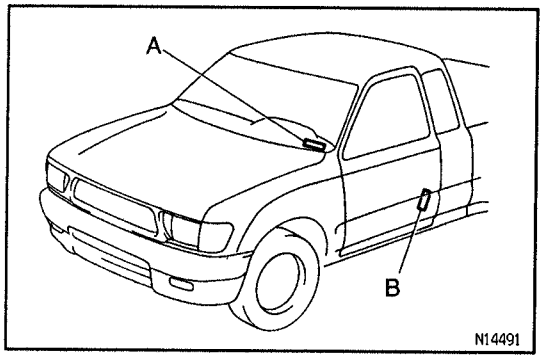

IDENTIFICATION INFORMATION

VEHICLE IDENTIFICATION NUMBER

IN003-00

The vehicle identification number is stamped on the vehicle identification number plate and certification label.

A. Vehicle Identification Number Plate
B. Certification Label

2RZ-FE, 3RZ-FE Engine :

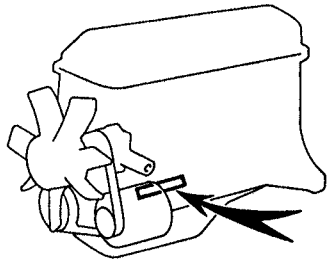

5VZ-FE Engine :

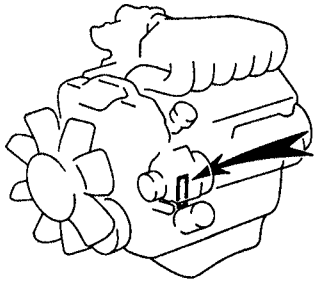

ENGINE SERIAL NUMBER

IN0S6-01

The engine serial number is stamped on the engine block as shown.

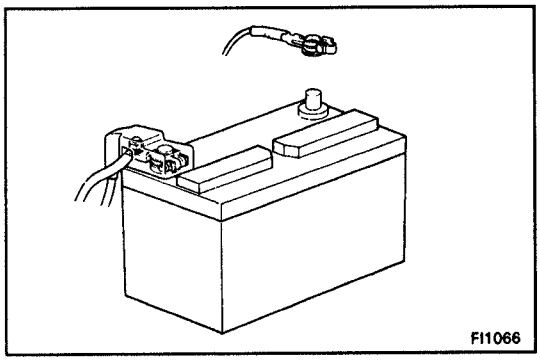
FI1066

GENERAL REPAIR INSTRUCTIONS

IN059-01

1. Use fender, seat and floor covers to keep the vehicle clean and prevent damage.
2. During disassembly, keep parts in the appropriate order to facilitate reassembly.
3. Observe the following:
   (a) Before performing electrical work, disconnect the negative (–) terminal cable from the battery.
   (b) If it is necessary to disconnect the battery for inspection or repair, always disconnect the negative (–) terminal cable which is grounded to the vehicle body.
   (c) To prevent damage to the battery terminal, loosen the cable nut and raise the cable straight up without twisting or prying it.
   (d) Clean the battery terminals and cable ends with a clean shop rag. Do not scrape them with a file or other abrasive objects.
   (e) Install the cable ends to the battery terminals with the nut loose, and tighten the nut after installation. Do not use a hammer to tap the cable ends onto the terminals.
   (f) Be sure the cover for the positive (+) terminal is properly in place.
4. Check hose and wiring connectors to make sure that they are secure and correct.
5. Non–reusable parts
   (a) Always replace cotter pins, gaskets, O–rings and oil seals etc. with new ones.
   (b) Non–reusable parts are indicated in the component illustrations by the "◆" symbol.

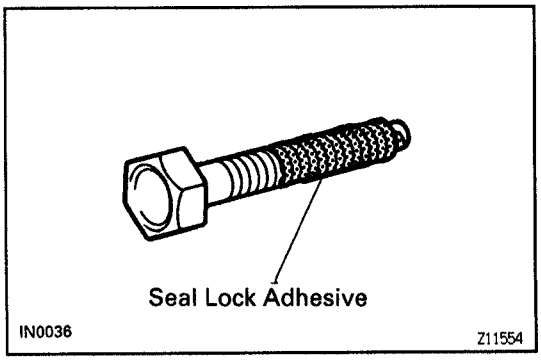

IN0036 Z11554

6. Precoated parts
   Precoated parts are bolts and nuts, etc. that are coated with a seal lock adhesive at the factory.
   (a) If a precoated part is retightened, loosened or caused to move in any way, it must be recoated with the specified adhesive.

IN

(b) When reusing precoated parts, clean off the old adhesive and dry with compressed air. Then apply the specified seal lock adhesive to the bolt, nut or threads.

(c) Precoated parts are indicated in the component illustrations by the "★" symbol.

7. When necessary, use a sealer on gaskets to prevent leaks.
8. Carefully observe all specifications for bolt tightening torques. Always use a torque wrench.
9. Use of special service tools (SST) and special service materials (SSM) may be required, depending on the nature of the repair. Be sure to use SST and SSM where specified and follow the proper work procedure. A list of SST and SSM can be found in the preparation part at the front of each section in this manual.

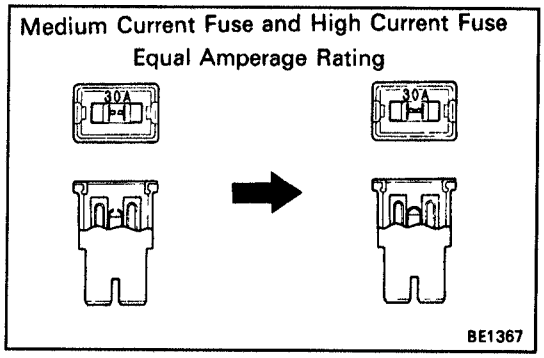

10. When replacing fuses, be sure the new fuse has the correct amperage rating. DO NOT exceed the rating or use one with a lower rating.

Illustration	Symbol	Part Name	Abbreviation
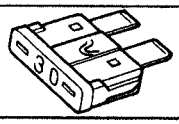 BE5594	 IN0365	FUSE	FUSE
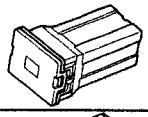 BE5595	 IN0366	MEDIUM CURRENT FUSE	M-FUSE
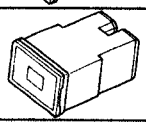 BE5596	 IN0367	HIGH CURRENT FUSE	H-FUSE
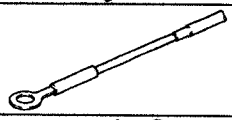 BE5597	 IN0367	FUSIBLE LINK	FL
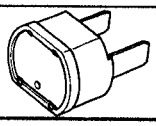 BE5598	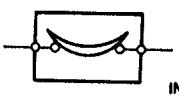 IN0368	CIRCUIT BREAKER	CB

11. Care must be taken when jacking up and supporting the vehicle. Be sure to lift and support the vehicle at the proper locations (See page IN−30).
    (a) If the vehicle is to be jacked up only at the front or rear end, be sure to block the wheels at the opposite end in order to ensure safety.
    (b) After the vehicle is jacked up, be sure to support it on stands. It is extremely dangerous to do any work on a vehicle raised on a jack alone, even for a small job that can be finished quickly.
12. Observe the following precautions to avoid damage to the following parts:
    (a) Do not open the cover or case of the ECU, ECM, PCM or TCM unless absolutely necessary. (If the IC terminals are touched, the IC may be destroyed by static electricity.)

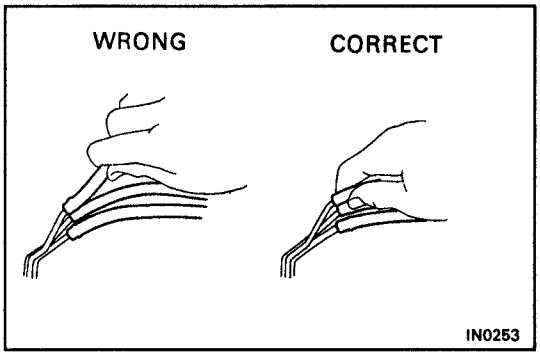

    (b) To disconnect vacuum hoses, pull on the end, not the middle of the hose.
    (c) To pull apart electrical connectors, pull on the connector itself, not the wires.
    (d) Be careful not to drop electrical components, such as sensors or relays. If they are dropped on a hard floor, they should be replaced and not reused.
    (e) When steam cleaning an engine, protect the distributor, air filter, and VCV from water.
    (f) Never use an impact wrench to remove or install temperature switches or temperature sensors.
    (g) When checking continuity at the wire connector, insert the tester probe carefully to prevent terminals from bending.
    (h) When using a vacuum gauge, never force the hose onto a connector that is too large. Use a step−down adapter instead. Once the hose has been stretched, it may leak.

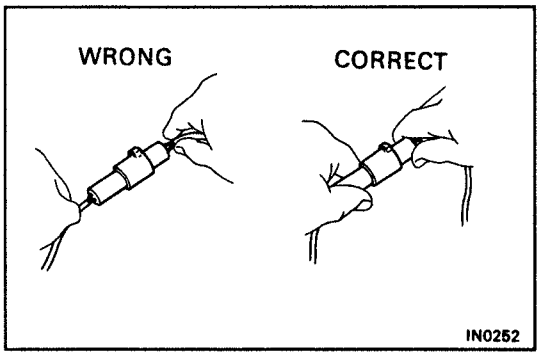

13. Tag hoses before disconnecting them:
    (a) When disconnecting vacuum hoses, use tags to identify how they should be reconnected.
    (b) After completing a job, double check that the vacuum hoses are properly connected. A label under the hood shows the proper layout.

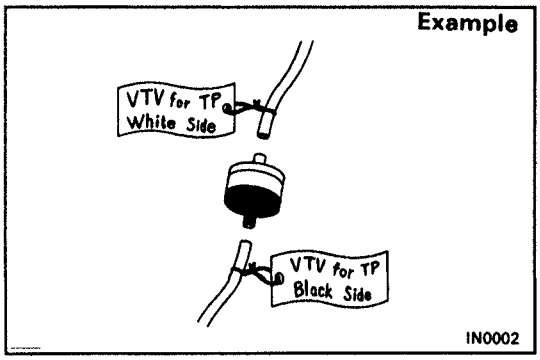

14. Unless otherwise stated, all resistance is measured at an ambient temperature of 20°C (68°F). Because the resistance may be outside specifications if measured at high temperatures immediately after the vehicle has been running, measurements should be made when the engine has cooled down.

PRECAUTION

FOR VEHICLES EQUIPPED WITH AIRBAG IN08A-01

The 1996 TOYOTA TACOMA is equipped with an SRS (Supplemental Restraint System), such as the driver airbag.

Failure to carry out service operations in the correct sequence could cause the supplemental restraint system to unexpectedly deploy during servicing, possibly leading to a serious accident.

Further, if a mistake is made in servicing the supplemental restraint system, it is possible the SRS may fail to operate when required. Before servicing (including removal or installation of parts, inspection or replacement), be sure to read the following items carefully, then follow the correct procedure described in this manual.

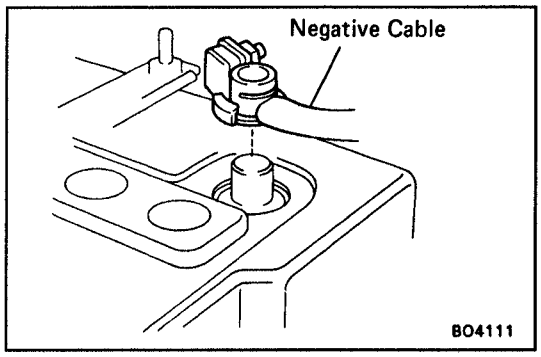

1. Malfunction symptoms of the supplemental restraint system are difficult to confirm, so the diagnostic trouble codes become the most important source of information when troubleshooting. When troubleshooting the supplemental restraint system, always inspect the diagnostic trouble codes before disconnecting the battery (See page RS−2).
2. **Work must be started after 90 seconds from the time the ignition switch is turned to the "LOCK" position and the negative (−) terminal cable is disconnected from the battery.**
   (The supplemental restraint system is equipped with a back−up power source so that if work is started within 90 seconds of disconnecting the negative (−) terminal cable from the battery, the SRS may deploy.)
   When the negative (−) terminal cable is disconnected from the battery, memory of the clock and audio systems will be cancelled. So before starting work, make a record of the contents memorized by the audio memory system. When work is finished, reset the audio systems as before and adjust the clock.
   This vehicle has power tilt and power telescopic steering, power seat, power outside rear view mirror and power shoulder belt anchorage, which are all equipped with memory function, it is not possible to make a record of the memory contents.

So when the work is finished, therefore it will be necessary to explain this fact to the customer, and ask the customer to adjust the features and reset the memory.

To avoid erasing the memory of each memory system, never use a back–up power supply from outside the vehicle.

3. Even in cases of a minor collision where the SRS does not deploy, the steering wheel pad should be inspected (See page RS–8).
4. Never use SRS parts from another vehicle. When replacing parts, replace them with new parts.
5. Before repairs, remove the airbag sensor if shocks are likely to be applied to the sensor during repairs.
6. Never disassemble and repair the airbag sensor assembly, steering wheel pad in order to reuse it.
7. If the airbag sensor assembly, steering wheel pad have been dropped, or if there are cracks, dents or other defects in the case, bracket or connector, replace them with new ones.
8. Do not expose the airbag sensor assembly, steering wheel pad directly to hot air or flames.
9. Use a volt/ohmmeter with high impedance (10 kΩ/V minimum) for troubleshooting of the electrical circuit.
10. Information labels are attached to the periphery of the SRS components. Follow the instructions on the notices.
11. After work on the supplemental restraint system is completed, check the SRS warning light (See page RS –26).

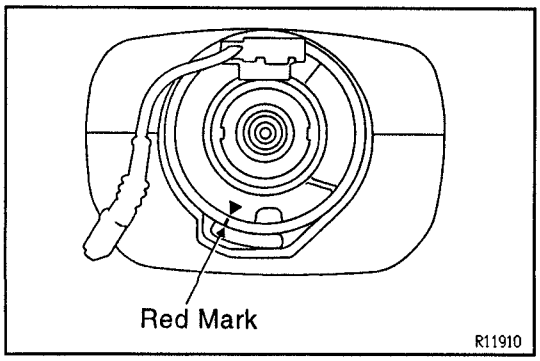

Spiral Cable (in Combination Switch)

The steering wheel must be fitted correctly to the steering column with the spiral cable at the neutral position, otherwise cable disconnection and other troubles may result. Refer to SR–16 of this manual concerning correct steering wheel installation.

IN

Steering Wheel Pad (with Airbag)

1. **When removing the steering wheel pad or handling a new steering wheel pad, it should be placed with the pad top surface facing up.**
   In this case, the twin–lock type connector lock lever should be in the locked state and care should be taken to place it so the connector will not be damaged. In addition do not store a steering wheel pad on top of another one. Storing the pad with its metallic surface up may lead to a serious accident if the airbag inflates for some reason.
2. **Never measure the resistance of the airbag squib. (This may cause the airbag to deploy, which is very dangerous.)**
3. Grease should not be applied to the steering wheel pad and the pad should not be cleaned with detergents of any kind.
4. Store the steering wheel pad where the ambient temperature remains below 93°C (200°F), without high humidity and away from electrical noise.
5. When using electric welding, first disconnect the airbag connector (yellow color and 2 pins) under the steering column near the combination switch connector before starting work.
6. **When disposing of a vehicle or the steering wheel pad alone, the airbag should be deployed using an SST before disposal (See page RS–11).**
   Carry out the operation in a safe place away from electrical noise.

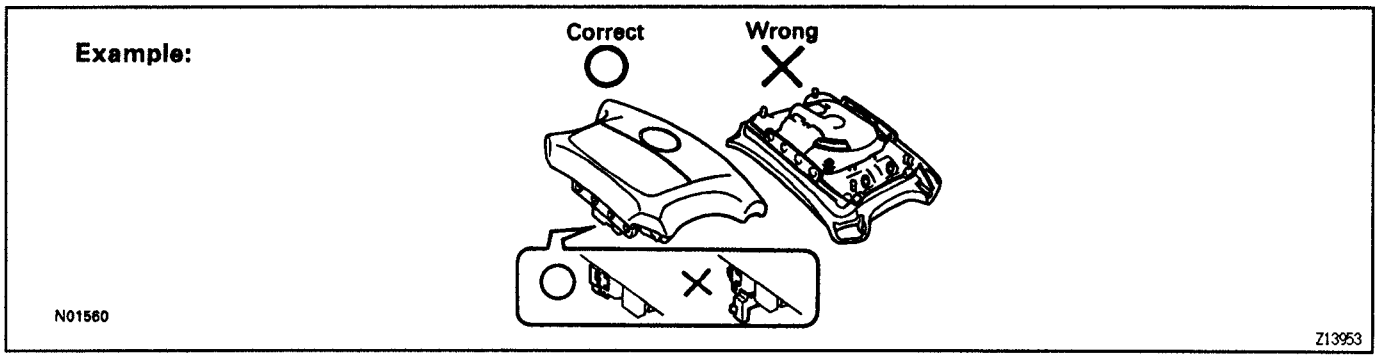

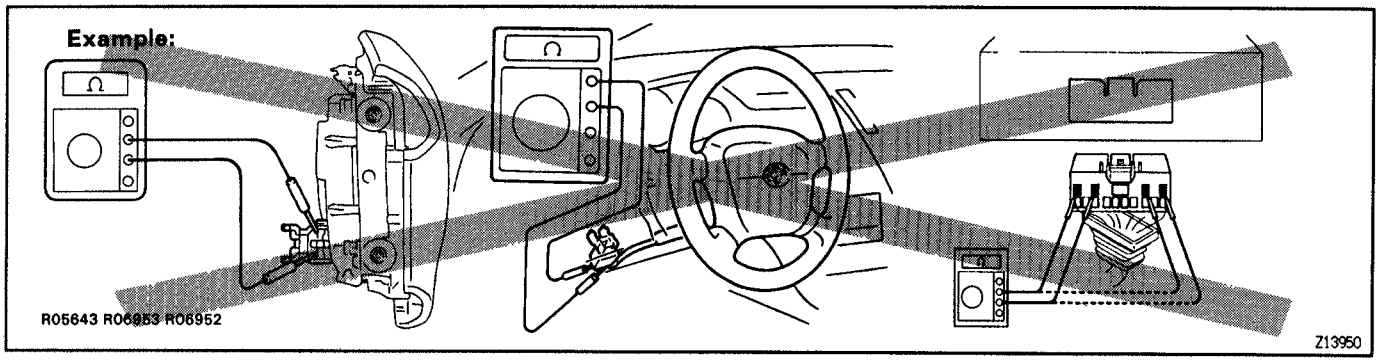

Airbag Sensor Assembly

1. Never reuse the airbag sensor assembly involved in a collision when the SRS has deployed.
2. The connectors to the airbag sensor assembly should be connected or disconnected with the sensor mounted on the floor. If the connectors are connected or disconnected while the airbag sensor assembly is not mounted to the floor, it could cause undesired ignition of the supplemental restraint system.
3. Work must be started after 90 seconds from the time the ignition switch is turned to the "LOCK" position and the negative (–) terminal cable is disconnected from the battery, even if only loosening the set bolts of the airbag sensor assembly.

Wire Harness and Connector

The SRS wire harness is integrated with the cowl wire harness assembly and floor wire harness assembly. The wires for the SRS wire harness are encased in a yellow corrugated tube. All the connectors for the system are also a standard yellow color. If the SRS wire harness becomes disconnected or the connector becomes broken due to an accident, etc., repair or replace it as shown on page RS–20.

FOR VEHICLES EQUIPPED WITH A CATALYTIC CONVERTER

IN006-08

CAUTION: If large amounts of unburned gasoline flow into the converter, it may overheat and create a fire hazard. To prevent this, observe the following precautions and explain them to your customer.

1. **Use only unleaded gasoline.**
2. **Avoid prolonged idling.**
   Avoid running the engine at idle speed for more than 20 minutes.
3. **Avoid spark jump test.**

(a) Perform spark jump test only when absolutely necessary. Perform this test as rapidly as possible.
(b) While testing, never race the engine.

4. **Avoid prolonged engine compression measurement.**
   Engine compression tests must be done as rapidly as possible.
5. **Do not run engine when fuel tank is nearly empty.**
   This may cause the engine to misfire and create an extra load on the converter.
6. **Avoid coasting with ignition turned off and prolonged braking.**
7. **Do not dispose of used catalyst along with parts contaminated with gasoline or oil.**

IF VEHICLE IS EQUIPPED WITH MOBILE COMMUNICATION SYSTEM

IN02R-0D

For vehicles with mobile communication systems such as two–way radios and cellular telephones, observe the following precautions.

(1) Install the antenna as far as possible away from the ECM, ECU and sensors of the vehicle's electronic system.

(2) Install the antenna feeder at least 20 cm (7.87 in.) away from the ECM, ECU and sensors of the vehicle's electronics systems. For details about ECM, ECU and sensors locations, refer to the section on the applicable component.

(3) Do not wind the antenna feeder together with the other wiring. As much as possible, also avoid running the antenna feeder parallel with other wire harnesses.

(4) Confirm that the antenna and feeder are correctly adjusted.

(5) Do not install powerful mobile communications system.

HOW TO TROUBLESHOOT ECU CONTROLLED SYSTEMS

A large number of ECU controlled systems are used in the TACOMA. In general, the ECU controlled system is considered to be a very intricate system requiring a high level of technical knowledge and expert skill to troubleshoot. However, the fact is that if you proceed to inspect the circuits one by one, troubleshooting of these systems is not complex. If you have adequate understanding of the system and a basic knowledge of electricity, accurate diagnosis and necessary repair can be performed to locate and fix the problem. This manual is designed through emphasis of the above standpoint to help service technicians perform accurate and effective troubleshooting, and is compiled for the following major ECU controlled systems:

System		Page
1.	2RZ-FE, 3RZ-FE Engine	EG-184
	5VZ-FE Engine	EG-192
2.	A340E, A340F Automatic Transmission	AT-32
3.	Anti-Lock Brake	BR-43
4.	Supplemental Restraint System	RS-23
5.	Cruise Control	BE-79

The troubleshooting procedure and how to make use of it are described on the following pages.

HOW TO PROCEED WITH TROUBLESHOOTING

Carry out troubleshooting in accordance with the procedure on the following page. Here, only the basic procedure is shown. Details are provided in each section, showing the most effective methods for each circuit. Confirm the troubleshooting procedures first for the relevant circuit before beginning troubleshooting of that circuit.

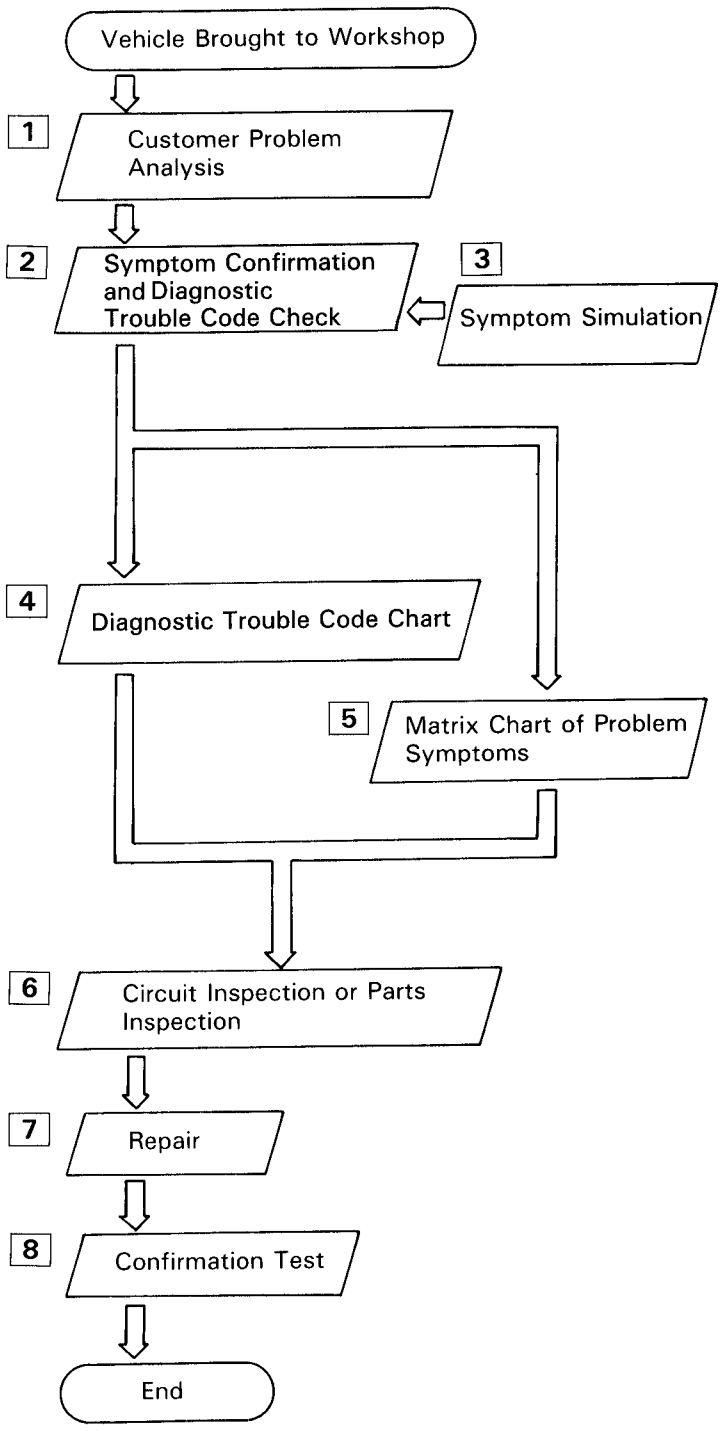

1

Ask the customer about the conditions and the environment when the problem occurred.

2 3

Confirm the symptoms and the problem conditions, and check the diagnostic trouble codes. (When the problem symptoms do not appear during confirmation, use the symptom simulation method described later on.)

4 5 6

Check the results obtained in Step 2 , then confirm the inspection procedure for the system or the part which should be checked using the diagnostic trouble code chart or the matrix chart of problem symptoms.

7

Check and repair the affected system or part in accordance with the instructions in Step 6 .

8

After completing repairs, confirm that the problem has been eliminated.
(If the problem is not reproduced, perform the confirmation test under the same conditions and in the same environment as when it occurred for the first time.)

1 CUSTOMER PROBLEM ANALYSIS

In troubleshooting, the problem symptoms must be confirmed accurately and all preconceptions must be cleared away in order to give an accurate judgement. To ascertain just what the problem symptoms are, it is extremely important to ask the customer about the problem and the conditions at the time it occurred.

Important Points in the Problem Analysis

The following 5 items are important points in the problem analysis. Past problems which are thought to be unrelated and the repair history, etc. may also help in some cases, so as much information as possible should be gathered and its relationship with the problem symptoms should be correctly ascertained for reference in troubleshooting. A customer problem analysis table is provided in the troubleshooting section for each system for your use.

Important Points in the Customer Problem Analysis

- What ——— Vehicle model, system name
- When ——— Date, time, occurrence frequency
- Where ——— Road conditions
- Under what conditions? ——— Running conditions, driving conditions, weather conditions
- How did it happen? ——— Problem symptoms

(Sample) Engine control system check sheet.

CUSTOMER PROBLEM ANALYSIS CHECK SHEET

ENGINE CONTROL System Check Sheet

Inspector's Name

Customer's name		Model and model year	
Driver's name		Frame no.	
Date vehicle brought in		Engine model	
License no.		Odometer reading	km miles

Problem Symptoms	☐ Engine does not Start	☐ Engine does not crank ☐ No initial combustion ☐ No complete combustion
	☐ Difficult to Start	☐ Engine cranks slowly ☐ Other
	☐ Poor Idling	☐ Incorrect first idle ☐ Idling rpm is abnormal [☐ High ☐ Low (rpm)] ☐ Rough idling ☐ Other
	☐ Poor Driveability	☐ Hesitation ☐ Back fire ☐ Muffler explosion (after-fire) ☐ Surging ☐ Knocking ☐ Other
	☐ Engine Stall	☐ Soon after starting ☐ After accelerator pedal depressed ☐ After accelerator pedal released ☐ During A/C operation ☐ Shifting from N to D ☐ Other
	☐ Others	

Dates Problem Occurred		
Problem Frequency		☐ Constant ☐ Sometimes (times per day/month) ☐ Once only ☐ Other
	Weather	☐ Fine ☐ Cloudy ☐ Rainy ☐ Snowy ☐ Various/Other
	Outdoor	☐ Hot ☐ Warm ☐ Cool ☐ Cold (approx. °F / °C)
		☐ Highway ☐ Suburbs ☐ Inner City ☐ Uphill ☐ Rough road ☐ Other
		☐ Warming up ☐ After warming up
		☐ Just after starting [min.] ☐ Idl Constant speed ☐ Accel

2 SYMPTOM CONFIRMATION AND DIAGNOSTIC TROUBLE CODE CHECK

The diagnostic system in the TACOMA fulfills various functions. The first function is the Diagnostic Trouble Code Check in which a malfunction in the signal circuits to the ECU is stored in code in the ECU memory at the time of occurrence, to be output by the technician during troubleshooting. Another function is the Input Signal Check which checks if the signals from various switches are sent to the ECU correctly. The air conditioner system has an Actuator Check function whereby the ECU automatically operates the actuators of the damper and blowermotor, etc. to check the operation. By using these check functions, the problem areas can be narrowed down quickly and troubleshooting can be performed effectively. Diagnostic functions are incorporated in the following systems in the TACOMA.

System		Diagnostic Trouble Code Check	Input Signal Check (Sensor Check)	Other Diagnosis Function
Engine	2RZ-FE, 3RZ-FE	○ (with Check Mode)	○	Diagnostic Test Mode
	5VZ-FE	○ (with Check Mode)	○	Diagnostic Test Mode
Automatic Transmission		○ (with Check Mode)	○	Diagnostic Test Mode
Supplemental Restraint System		○	○	

In diagnostic trouble code check, it is very important to determine whether the problem indicated by the diagnostic trouble code is still occurring or occurred in the past but returned to normal at present. In addition, it must be checked in the problem symptom check whether the malfunction indicated by the diagnostic trouble code is directly related to the problem symptom or not. For this reason, the diagnostic trouble codes should be checked before and after the symptom confirmation to determine the current conditions, as shown in the table below. If this is not done, it may depending on the case, result in unnecessary troubleshooting for normally operating systems, thus making it more difficult to locate the problem, or in repairs not pertinent to the problem. Therefore, always follow the procedure in correct order and perform the diagnostic trouble code check.

DIAGNOSTIC TROUBLE CODE CHECK PROCEDURE

Diagnostic Trouble Code Check (Make a note of and then clear)	Confirmation of Symptoms	Diagnostic Trouble Code Check	Problem Condition
Diagnostic Trouble Code Display	⇨ Problem symptoms exist	Same diagnostic trouble code is displayed	Problem is still occurring in the diagnostic circuit.
		Normal code is displayed	The problem is still occurring in a place other than in the diagnostic circuit. (The diagnostic trouble code displayed first is either for a past problem or it is a secondary problem.)
	⇨ No problem symptoms exist		The problem occurred in the diagnostic circuit in the past.
Normal Code Display	⇨ Problem symptoms exist	Normal code is displayed	The problem is still occurring in a place other than in the diagnostic circuit.
	⇨ No problem symptoms exist	Normal code is displayed	The problem occurred in a place other than in the diagnostic circuit in the past.

Taking into account the above points, a flow chart showing how to proceed with troubleshooting using the diagnostic trouble code check is shown below. This flow chart shows how to utilize the diagnostic trouble code check effectively, then by carefully checking the results, indicates how to proceed either to diagnostic trouble code troubleshooting or to troubleshooting of problem symptoms.

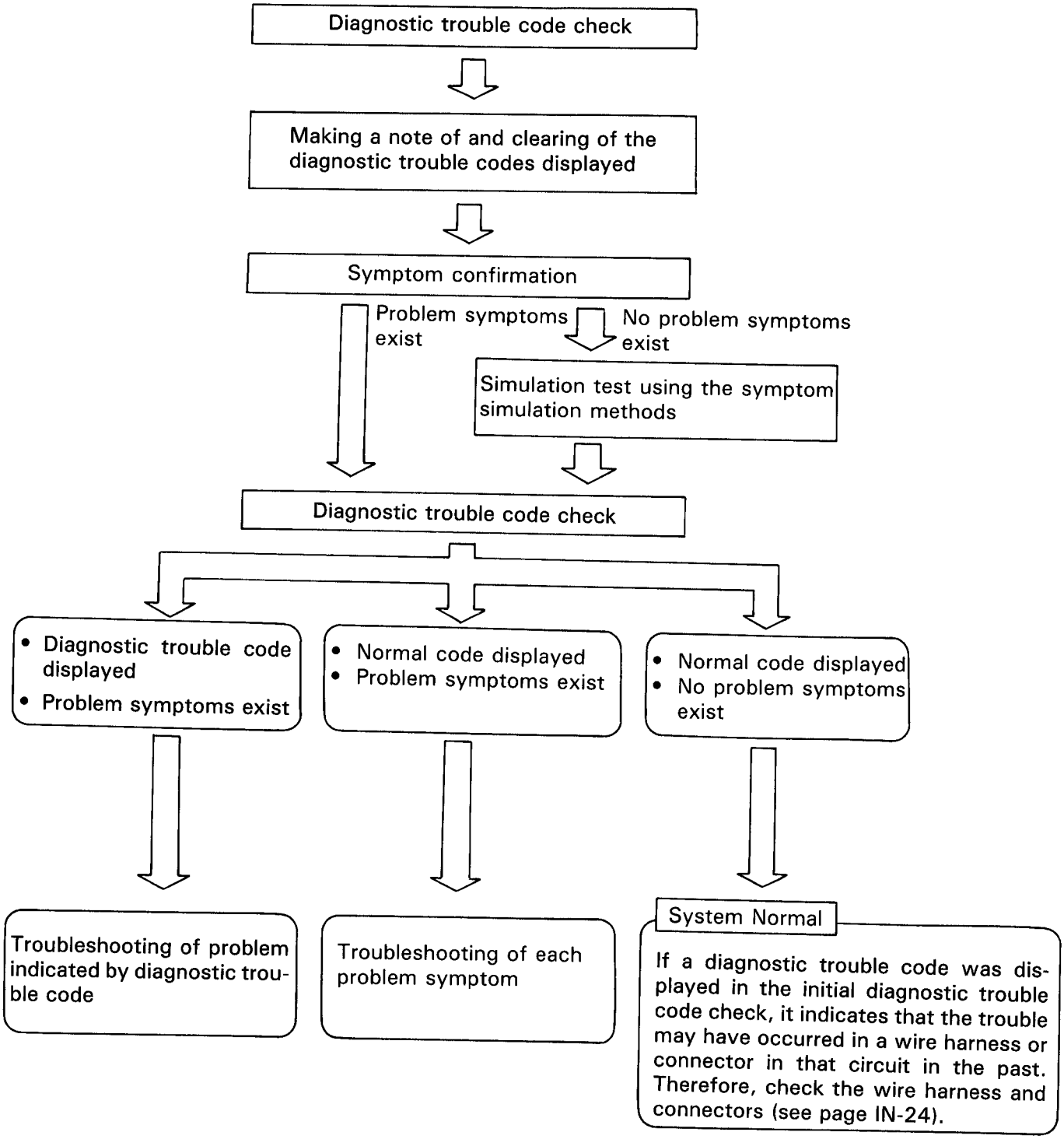

3 SYMPTOM SIMULATION

The most difficult case in troubleshooting is when there are no problem symptoms occurring. In such cases, a thorough customer problem analysis must be carried out, then simulate the same or similar conditions and environment in which the problem occurred in the customer's vehicle. No matter how much experience a technician has, or how skilled he may be, if he proceeds to troubleshoot without confirming the problem symptoms he will tend to overlook something important in the repair operation and make a wrong guess somewhere, which will only lead to a standstill. For example, for a problem which only occurs when the engine is cold, or for a problem which occurs due to vibration caused by the road during driving, etc., the problem can never be determined so long as the symptoms are confirmed with the engine hot condition or the vehicle at a standstill. Since vibration, heat or water penetration (moisture) are likely causes for problems which are difficult to reproduce, the symptom simulation tests introduced here are effective measures in that the external causes are applied to the vehicle in a stopped condition.

Important Points in the Symptom Simulation Test

In the symptom simulation test, the problem symptoms should of course be confirmed, but the problem area or parts must also be found out. To do this, narrow down the possible problem circuits according to the symptoms before starting this test and connect a tester beforehand. After that, carry out the symptom simulation test, judging whether the circuit being tested is defective or normal and also confirming the problem symptoms at the same time. Refer to the matrix chart of problem symptoms for each system to narrow down the possible causes of the symptom.

1 VIBRATION METHOD: When vibration seems to be the major cause.

CONNECTORS

Slightly shake the connector vertically and horizontally.

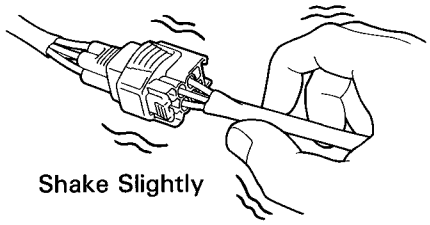

WIRE HARNESS

Slightly shake the wire harness vertically and horizontally. The connector joint, fulcrum of the vibration, and body through portion are the major areas to be checked thoroughly.

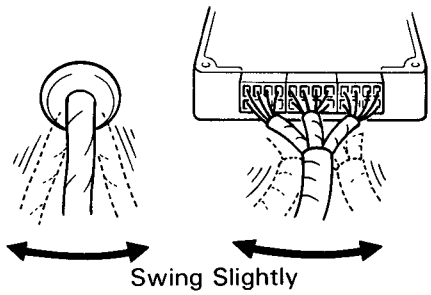

P19981
FI2332

PARTS AND SENSORS

Apply slight vibration with a finger to the part of the sensor considered to be the problem cause and check if the malfunction occurs.

HINT: Applying strong vibration to relays may result in open relays.

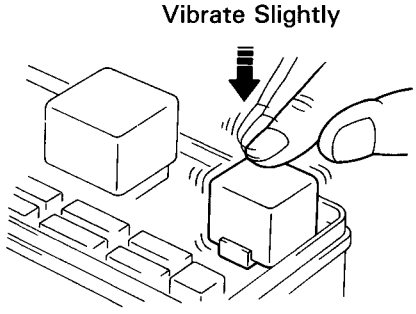

P20001

2 **HEAT METHOD: When the problem seems to occur when the suspect area is heated.**

Heat the component that is the likely cause of the malfunction with a hair dryer or similar object. Check to see if the malfunction occurs.

NOTICE:

(1) Do not heat to more than 60°C (140°F). (Temperature limit that no damage is done to the component).

(2) Do not apply heat directly to parts in the ECU.

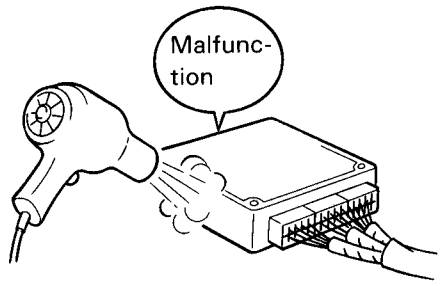

FI2334

3 **WATER SPRINKLING METHOD: When the malfunction seems to occur on a rainy day or in a high-humidity condition.**

Sprinkle water onto the vehicle and check to see if the malfunction occurs.

NOTICE:

(1) Never sprinkle water directly into the engine compartment, but indirectly change the temperature and humidity by applying water spray onto the radiator front surface.

(2) Never apply water directly onto the electronic components.

(Service hint)
If a vehicle is subject to water leakage, the leaked water may contaminate the ECU. When testing a vehicle with a water leakage problem, special caution must be used.



FI6649

4 **OTHER: When a malfunction seems to occur when electrical load is excessive.**

Turn on all electrical loads including the heater blower, head lights, rear window defogger, etc. and check to see if the malfunction occurs.

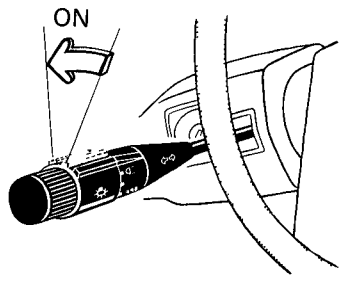

FI2336

IN

4 DIAGNOSTIC TROUBLE CODE CHART

The inspection procedure is shown in the table below. This table permits efficient and accurate troubleshooting using the diagnostic trouble codes displayed in the diagnostic trouble code check. Proceed with troubleshooting in accordance with the inspection procedure given in the diagnostic chart corresponding to the diagnostic trouble codes displayed.
The engine diagnostic trouble code chart is shown below as an example.

- DTC No.
  Indicates the diagnostic trouble code.
- Page or Instructions
  Indicates the page where the inspection procedure for each circuit is to be found, or gives instructions for checking and repairs.

- Detection Item
  Indicates the system of the problem or contents of the problem.

DTC CHART (SAE Controlled)

HINT: Parameters listed in the chart may not be exactly the same as your reading due to the type of instrument or other factors.

If a malfunction code is displayed during the DTC check in check mode, check the circuit for that code listed in the table below (Proceed to the page given for that circuit).

DTC No. (See Page)	Detection Item	Trouble Area	MIL*	Memory
P0100 (EG-218)	Mass Air Flow Circuit Malfunction	• Open or short in mass air flow meter circuit • Mass air flow meter • ECM	○	○
P0101 (EG-221)	Mass Air Flow Circuit Range/Performance Probelm	• Mass air flow meter	○	○
P0110 (EG-222)	Intake Air Temp. Circuit Malfunction	• Open or short in intake air temp. sensor circuit • Intake air temp. sensor • ECM	○	○
P0115 (EG-225)	Engine Coolant Temp. Circuit Malfunction	• Open or short in engine coolant temp. sensor circuit • Engine coolant temp. sensor • ECM	○	○
P0116 (EG-229)	Engine Coolant Temp. Circuit Range/ Performance Problem	• Engine coolant temp. sensor • Cooling system	○	○
	/Pedal Position itch "A" ction	• Open or short in throttle position sensor circuit • Throttle position sensor • ECM		
	on	• Throttle position sensor		

- Trouble Area
  Indicates the suspect area of the problem.

5 MATRIX CHART OF PROBLEM SYMPTOMS

The suspect circuits or parts for each problem symptom are shown in the table below. Use this table to troubleshoot the problem when a "Normal" code is displayed in the diagnostic trouble code check but the problem is still occurring. Numbers in the table indicate the inspection order in which the circuits or parts should be checked.

HINT: When the problem is not detected by the diagnostic system even though the problem symptom is present, it is considered that the problem is occurring outside the detection range of the diagnostic system, or that the problem is occurring in a system other than the diagnostic system.

- Problem Symptom
- Page
  Indicates the page where the flow chart for each circuit is located.
- Circuit or Part Name
  Indicates the circuit or part which needs to be checked.

MATRIX CHART OF PROBLEM SYMPTOMS

When the malfunction code is not confirmed in the DTC check and the problem still can not be confirmed in the basic inspection, then proceed to this step and perform troubleshooting according to the numbered order given in the table below.

Suspect area / Symptom		Starter signal circuit	ECM power source circuit	Fuel pump control circuit	Fuel pressure control circuit	A/C idle-up circuit	Starter and starter relay	Compression	A/T faulty	Engine control module (ECM)
See page		EG-299	EG-304	EG-309	EG-314	EG-306	ST section	EG-7	AT section	IN-29
Does not start	Engine does not crank						1			
	No initial combustion		1	2						
	No complete combustion			1						
	Engine cranks normally	1		2				3		
		1		2						
		1		3	2					
			2							

- Circuit Inspection, Inspection Order
  Indicates the circuit which needs to be checked for each problem symptom. Check in the order indicated by the numbers.

6 CIRCUIT INSPECTION

How to read and use each page is shown below.

IN

- Diagnostic Trouble Code No. and Detection Item
- Circuit Description
  The major role and operation, etc. of the circuit and its component parts are explained.

DTC	P0325	Knock Sensor 1 Circuit Malfunction

DTC	P0330	Knock Sensor 2 Circuit Malfunction

- Indicates the diagnostic trouble code, diagnostic trouble code set parameter and suspect area of the problem.

CIRCUIT DESCRIPTION

Knock sensors are fitted one each to the right bank and left bank of the cylinder block to detect engine knocking. This sensor contains a piezoelectric element which generates a voltage when it becomes deformed, which occurs when the cylinder block vibrates due to knocking. If engine knocking occurs, ignition timing is retarded to suppress it.

DTC No.	Diagnostic Trouble Code Detecting Condition	Trouble Area
P0325	No knock sensor 1 signal to ECM with engine speed 2,000 rpm or more	• Open or short in knock sensor 1 circuit • Knock sensor 1 (looseness) • ECM
P0330	No knock sensor 2 signal to ECM with engine speed 2,000 rpm or more	• Open or short in knock sensor 2 circuit • Knock sensor 2 (looseness) • ECM

If the ECM detects the above diagnosis conditions, it operates the fail safe function in which the corrective retard angle value is set to the maximum value.

WIRING DIAGRAM

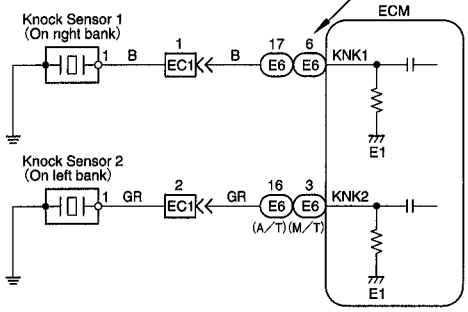

P19919

- Wiring Diagram
  This shows a wiring diagram of the circuit. Use this diagram together with ELECTRICAL WIRING DIAGRAM to thoroughly understand the circuit.

  Wire colors are indicated by an alphabetical code.

B = Black	L = Blue	R = Red
BR = Brown	LG = Light Green	V = Violet
G = Green	O = Orange	W = White
GR = Gray	P = Pink	Y = Yellow

  The first letter indicates the basic wire color and the second letter indicates the color of the stripe.

- Indicates the position of the ignition switch during the check.

LOCK Ignition Switch LOCK (OFF) ON Ignition Switch ON

START Ignition Switch START ACC Ignition Switch ACC

- **Inspection Procedure**

Use the inspection procedure to determine if the circuit is normal or abnormal, and, if it is abnormal, use it to determine whether the problem is located in the sensors, actuators, wire harness or ECU.

IN

2 Check voltage between terminal 1 of wire harness side connector and body ground.

ON

1(+)

BE6653 P23808

OK

P (1) Disconnect the throttle position sensor connector.
(2) Turn ignition switch ON.

C Measure voltage between terminal 1 of wire harness side connector and body ground.

OK Voltage: 4.5 – 5.5 V

NG Go to step 5 .

3 Check throttle position sensor.

Throttle Position Sensor

1 2 4

P Disconnect the throttle positon sensor connector.

C Measure resistance between terminals 1, 2 and 4 of throttle position sensor.

OK

Terminals	Throttle valve	Resistance
1 – 4	—	2.5 – 5.9 kΩ
2 – 4	Fully closed	0.2 – 5.7 kΩ
	Fully open	2.0

NG Replace throttle positi

terminals VTA and E

- P Preparation
- C Check

- Indicates the place to check the voltage or resistance.
- Indicates the connector position to be checked, from the front or back side.

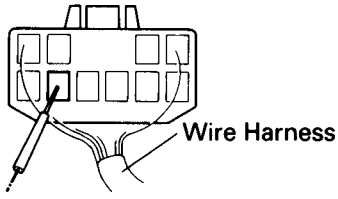

BE4076

Check from the connector back side. (with harness)

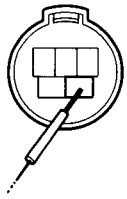

BE4077

Check from the connector front side (without harness) In this case, care must be taken not to bend the terminals.

- Indicates the condition of the connector of ECU during the ckeck.

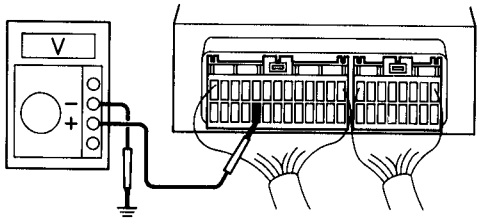

Connector being checked is connected.

BR5459

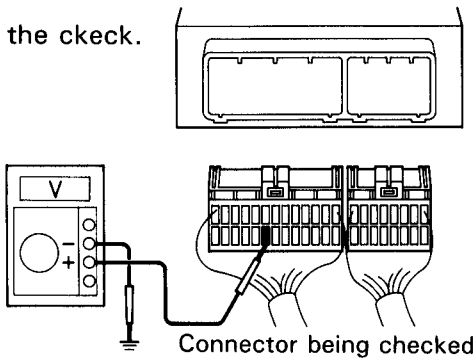

Connector being checked is disconnected.

BR5450

HOW TO USE THE DIAGNOSTIC CHART AND INSPECTION PROCEDURE

1. For troubleshooting, diagnostic trouble code charts or problem symptom charts are provided for each circuit with detailed inspection procedures on the following pages.
2. When all the component parts, wire harnesses and connectors of each circuit except the ECU are found to be normal in troubleshooting, then it is determined that the problem is in the ECU.
   Accordingly, if diagnosis is performed without the problem symptoms occurring, the instruction will be to check and replace the ECU, even if the problem is not in the ECU. So, always confirm that the problem symptoms are occurring, or proceed with inspection while using the symptom simulation method.
3. The instructions "Check wire harness and connector" and "Check and replace ECU" which appear in the inspection procedure, are common and applicable to all diagnostic trouble codes. Follow the procedure outlined below whenever these instructions appear.

Check Wire Harness and Connector

The problem in the wire harness or connector is an open circuit or a short circuit.

OPEN CIRCUIT:

This could be due to a disconnected wire harness, faulty contact in the connector, a connector terminal pulled out, etc.

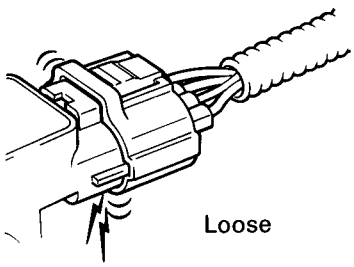

FI7049

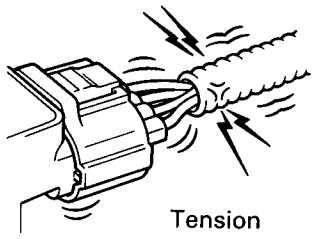

FI7048

HINT:

1. It is rarely the case that a wire is broken in the middle of it. Most cases occur at the connector. In particular, carefully check the connectors of sensors and actuators.
2. Faulty contact could be due to rusting of the connector terminals, to foreign materials entering terminals or a drop in the contact pressure between the male and female terminals of the connector. Simply disconnecting and reconnecting the connectors once changes the condition of the connection and may result in a return to normal operation.
   Therefore, in troubleshooting, if no abnormality is found in the wire harness and connector check, but the problem disappears after the check, then the cause is considered to be in the wire harness or connectors.

SHORT CIRCUIT:

This could be due to a short circuit between the wire harness and the body ground or to a short inside the switch, etc.

HINT:

- When there is a short between the wire harness and body ground, check thoroughly whether the wire harness is caught in the body or is clamped properly.

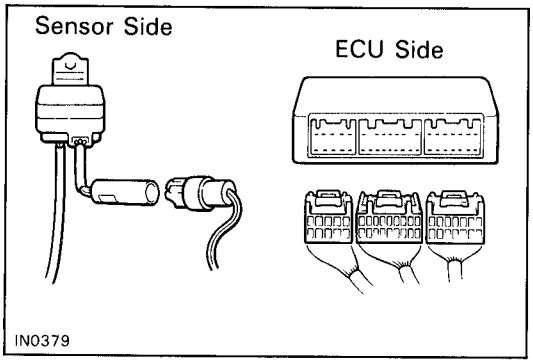

1. CONTINUITY CHECK (OPEN CIRCUIT CHECK)

(1) Disconnect the connectors at both ECU and sensor sides.

(2) Measure the resistance between the applicable terminals of the connectors.

Resistance: 1 Ω or less

HINT:

- Measure the resistance while lightly shaking the wire harness vertically and horizontally.
- When tester probes are inserted into a connector, insert the probes from the back. For waterproof connectors in which the probes cannot be inserted from the back, be careful not to bend the termianls when inserting the tester probes.

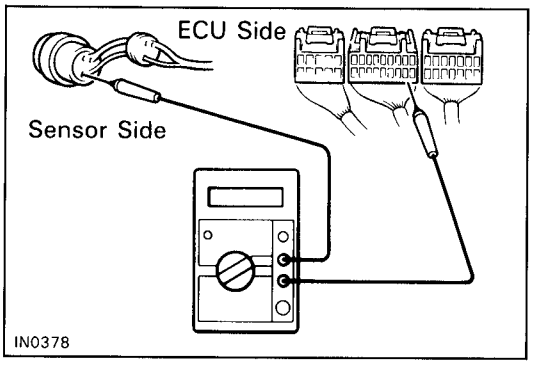

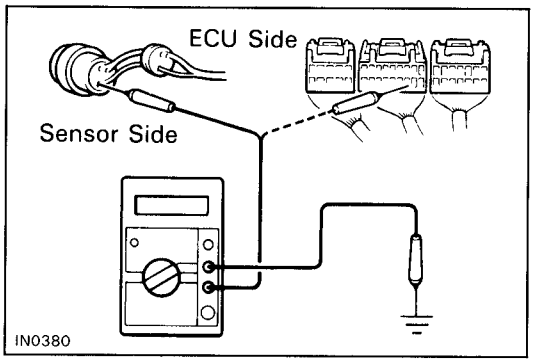

2. RESISTANCE CHECK (SHORT CIRCUIT CHECK)

(1) Disconnect the connectors at both ends.

(2) Measure the resistance between the applicable terminals of the connectors and body ground. Be sure to carry out this check on the connectors on both ends.

Resistance: 1 MΩ or higher

HINT: Measure the resistance while lightly shaking the wire harness vertically and horizontally.

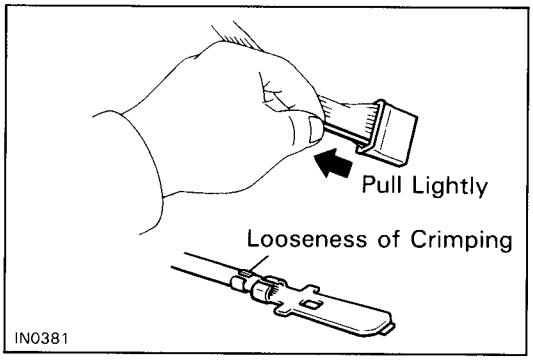

3. VISUAL CHECK AND CONTACT PRESSURE CHECK

(1) Disconnect the connectors at both ends.

(2) Check for rust or foreign material, etc. on the terminals of the connectors.

(3) Check crimped portions for looseness or damage and check if the terminals are secured in the lock position.

HINT: The terminals should not come out when pulled lightly.

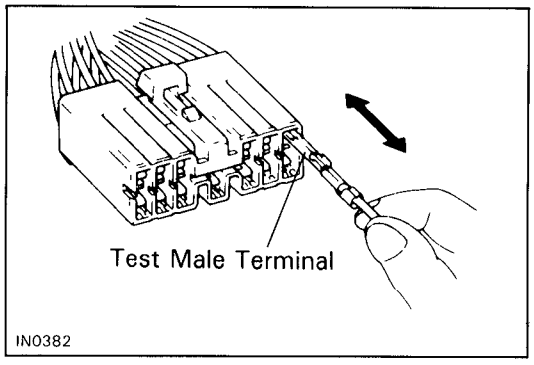

(4) Prepare a test male terminal and insert it in the female terminal, then pull it out.

HINT: When the test terminal is pulled out more easily than others, there may be poor contact in that section.

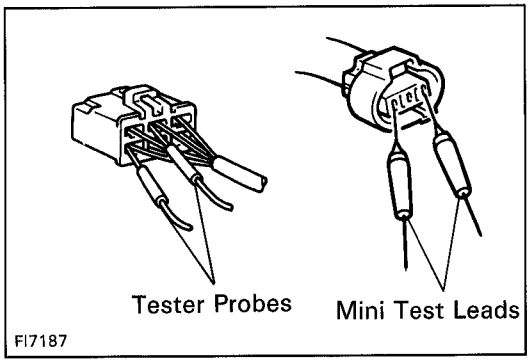

4. CONNECTOR HANDLING

When inserting tester probes into a connector, insert them from the rear of the connector. When necessary, use mini test leads. For water resistant connectors which cannot be accessed from behind, take good care not to deform the connector terminals.

Actual examples of the inspection method for open circuit and short circuit are explained below.

1. OPEN CIRCUIT CHECK

For the open circuit in the wire harness in Fig. 1, perform "(a) Continuity Check" or "(b) Voltage Check" to locate the section.

Fig. 1

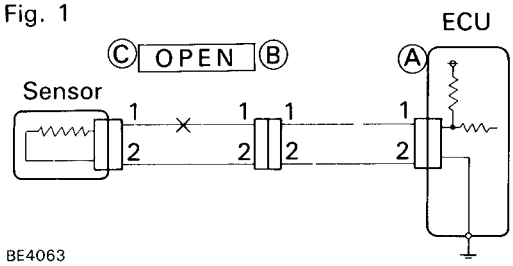

(a) Continuity Check

(1) Disconnect connectors Ⓐ and Ⓒ and measure the resistance between them.

In the case of Fig. 2,
Between terminal 1 of connector Ⓐ and terminal 1 of connector Ⓒ → No continuity (open)
Between terminal 2 of connector Ⓐ and terminal 2 of connector Ⓒ → Continuity
Therefore, it is found out that there is an open circuit between terminal 1 of connector Ⓐ and terminal 1 of connector Ⓒ.

Fig. 2

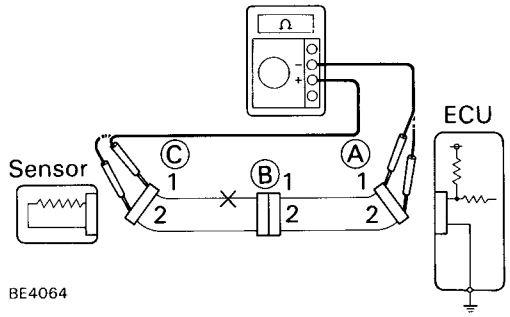

(2) Disconnect connector Ⓑ and measure the resistance between connectors Ⓐ and Ⓑ, Ⓑ and Ⓒ.

In the case of Fig. 3,
Between terminal 1 of connector Ⓐ and terminal 1 of connector Ⓑ → Continuity
Between terminal 1 of connector Ⓑ and terminal 1 of connector Ⓒ → No continuity (open)
Therefore, it is found out that there is an open circuit between terminal 1 of connector Ⓑ and terminal 1 of connector Ⓒ.

Fig. 3

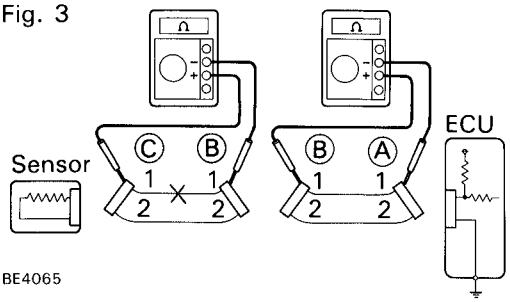

(b) Voltage Check

In a circuit in which voltage is applied (to the ECU connector terminal), an open circuit can be checked for by conducting a voltage check.

(1) As shown in Fig. 4, with each connector still connected, measure the voltage between body ground and terminal 1 of connector Ⓐ at the ECU 5 V output terminal, terminal 1 of connector Ⓑ, and terminal 1 of connector Ⓒ, in that order.

If the results are:

5 V: Between Terminal 1 of connector Ⓐ and Body Ground
5 V: Between Terminal 1 of connector Ⓑ and Body Ground
0 V: Between Terminal 1 of connector Ⓒ and Body Ground
then it is found out that there is an open circuit in the wire harness between terminal 1 of Ⓑ and terminal 1 of Ⓒ.

Fig. 4

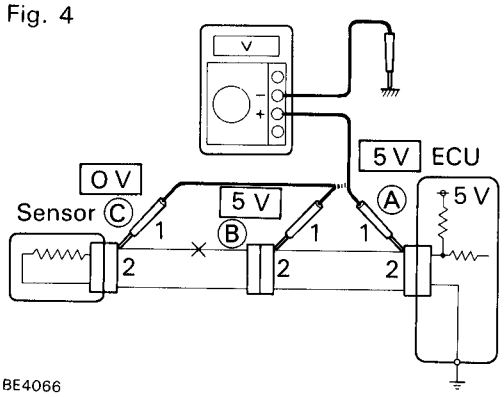

2. SHORT CIRCUIT CHECK

If the wire harness is ground shorted as in Fig. 5, locate the section by conducting a "continuity check with ground".

Fig. 5

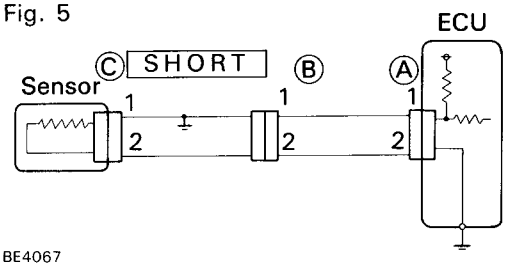

(a) Continuity Check with Ground

(1) Disconnect connectors Ⓐ and Ⓒ and measure the resistance between terminals 1 and 2 of connector Ⓐ and body ground.

In the case of Fig. 6,
Between terminal 1 of connector Ⓐ and body ground → Continuity
Between terminal 2 of connector Ⓐ and body ground → No continuity (open)
Therefore, it is found out that there is a short circuit between terminal 1 of connector Ⓐ and terminal 1 of connector Ⓒ.

Fig. 6

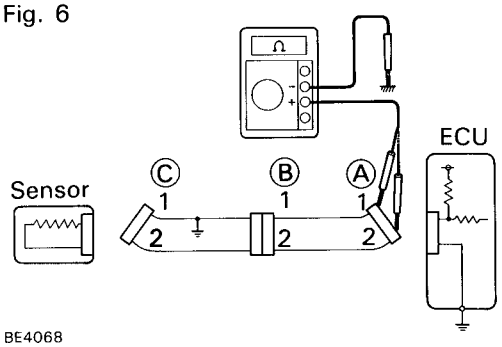

(2) Disconnect connector Ⓑ and measure the resistance between terminal 1 of connector Ⓐ and body ground, and terminal 1 of connector Ⓑ and body ground.

Between terminal 1 of connector Ⓐ and body ground → No continuity (open)
Between terminal 1 of connector Ⓑ and body ground → Continuity
Therefore, it is found out that there is a short circuit between terminal 1 of connector Ⓑ and terminal 1 of connector Ⓒ.

Fig. 7

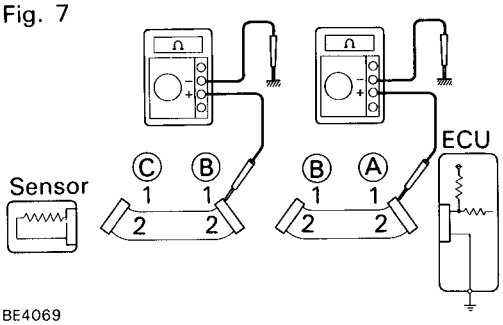

Check and Replace ECU

First check the ECU ground circuit. If it is faulty, repair it. If it is normal, the ECU could be faulty, so replace the ECU with a known good one and check if the symptoms appear.

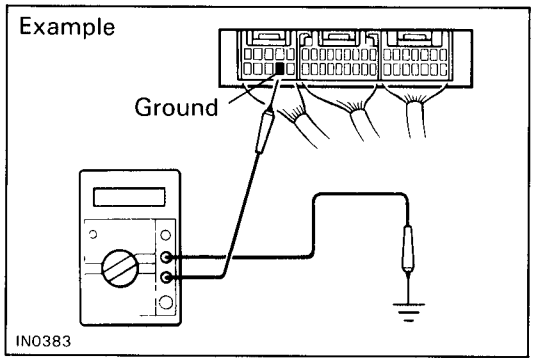

(1) Measure the resistance between the ECU ground terminal and the body ground.

Resistance: 1 Ω or less

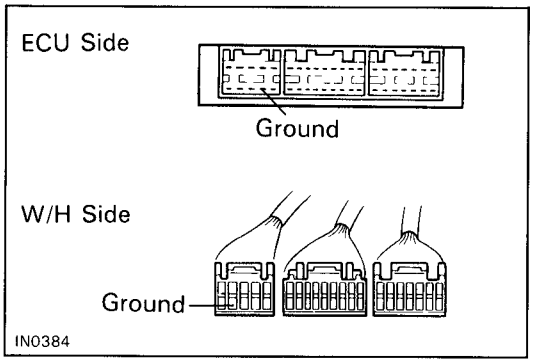

(2) Disconnect the ECU connector, check the ground terminals on the ECU side and the wire harness side for bend and check the contact pressure.

VEHICLE LIFT AND SUPPORT LOCATIONS

IN007-07

[2WD]

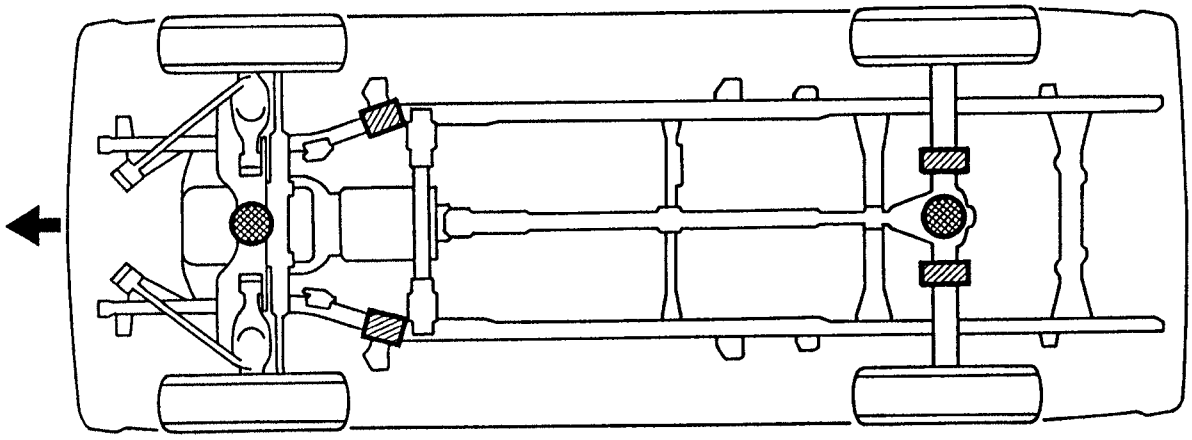

[4WD]

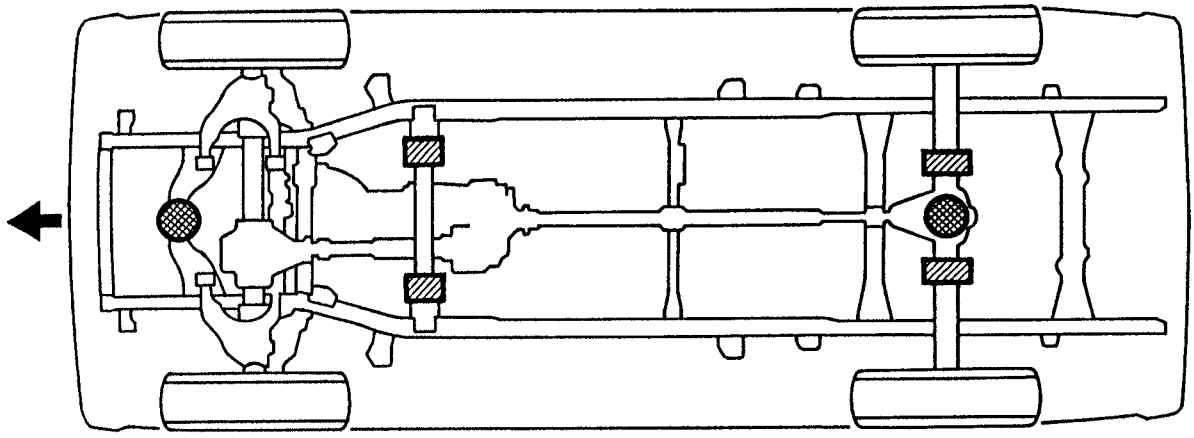

JACK POSITION . . . . . ●

Front . . . . . Center of crossmember
Rear . . . . . Under the rear differential

SUPPORT POSITION

Safety stand . . . . . ▨

N14493

ABBREVIATIONS USED IN THIS MANUAL

IN01D-1G

ABS	Anti—Lock Brake System
ADD	Automatic Disconnecting Differential
ALR	Automatic Locking Retractor
AS	Air Suction
A/T	Automatic Transmission
ATF	Automatic Transmission Fluid
BTDC	Before Top Dead Center
Calif.	California
CB	Circuit Breaker
CRS	Child Restraint System
DP	Dash Pot
DRW	Double Rear Wheel
ECU	Electronic Control Unit
ELR	Emergency Locking Retractor
ESA	Electronic Spark Advance
EX	Exhaust (Manifold, Valve)
Fed.	Vehicles Sold in USA except California
FIPG	Formed in Place Gasket
FL	Fusible Link
Fr	Front
IG	Ignition
IN	Intake (Manifold, Valve)
J/B	Junction Block
LH	Left—Hand
LSPV	Load Sensing Proportioning Valve
Max.	Maximum
Min.	Minimum
MP	Multipurpose
M/T	Manual Transmission
O/D, OD	Overdrive
OHC	Over Head Camshaft
O/S	Oversize
PCV	Positive Crankcase Ventilation
PKB	Parking Brake
PS	Power Steering
RH	Right—Hand
Rr	Rear
SRW	Single Rear Wheel
SSM	Special Service Materials
SST	Special Service Tools
STD	Standard
SW	Switch

TDC	Top Dead Center
TEMP.	Temperature
T/F	Transfer
T/M	Transmission
U/S	Undersize
VCS	Vacuum Control Switch
VCV	Vacuum Control Valve
VSV	Vacuum Switching Valve
VTV	Vacuum Transmitting Valve
w/	With
w/o	Without
2WD	Two Wheel Drive Vehicles (4x2)
4WD	Four Wheel Drive Vehicles (4x4)

GLOSSARY OF SAE AND TOYOTA TERMS

This glossary lists all SAE–J1930 terms and abbreviations used in this manual in compliance with SAE recommendations, as well as their Toyota equivalents. IN018–04

SAE ABBREVIATIONS	SAE TERMS	TOYOTA TERMS ( )––ABBREVIATIONS
A/C	Air Conditioning	Air Conditioner
ACL	Air Cleaner	Air Cleaner
AIR	Secondary Air Injection	Air Injection (AI)
AP	Accelerator Pedal	–
B+	Battery Positive Voltage	+B, Battery Voltage
BARO	Barometric Pressure	–
CAC	Charge Air Cooler	Intercooler
CARB	Carburetor	Carburetor
CFI	Continuous Fuel Injection	–
CKP	Crankshaft Position	Crank Angle
CL	Closed Loop	Closed Loop
CMP	Camshaft Position	Cam Angle
CPP	Clutch Pedal Position	–
CTOX	Continuous Trap Oxidizer	–
CTP	Closed Throttle Position	Idle ON (IDL ON)
DFI	Direct Fuel Injection (Diesel)	Direct Injection (DI)
DI	Distributor Ignition	–
DLC1 DLC2 DLC3	Data Link Connector 1 Data Link Connector 2 Data Link Connector 3	1: Check Connector 2: Toyota Diagnosis Comunication Link (TDCL) 3: OBD II Diagnostic Connector
DTC	Diagnostic Trouble Code	Diagnostic Code
DTM	Diagnostic Test Mode	–
ECL	Engine Control Level	–
ECM	Engine Control Module	Engine ECU (Electronic Control Unit)
ECT	Engine Coolant Temperature	Coolant Temperature, Water Temperature (THW)
EEPROM	Electrically Erasable Programmable Read Only Memory	Electrically Erasable Programmable Read Only Memory (EEPROM), Erasable Programmable Read Only Memory (EPROM)
EFE	Early Fuel Evaporation	Cold Mixture Heater (CMH), Heat Control Valve (HCV)
EGR	Exhaust Gas Recirculation	Exhaust Gas Recirculation (EGR)
EI	Electronic Ignition	Toyota Distributorless Ignition (TDI)
EM	Engine Modification	Engine Modification (EM)
EPROM	Erasable Programmable Read Only Memory	Programmable Read Only Memory (PROM)
EVAP	Evaporative Emission	Evaporative Emission Control (EVAP)
FC	Fan Control	–
FEEPROM	Flash Electrically Erasable Programmable Read Only Memory	–
FEPROM	Flash Erasable Programmable Read Only Memory	–
FF	Flexible Fuel	–
FP	Fuel Pump	Fuel Pump
GEN	Generator	Alternator
GND	Ground	Ground (GND)
HO2S	Heated Oxygen Sensor	Heated Oxygen Sensor (HO2S)

IAC	Idle Air Control	Idle Speed Control (ISC)
IAT	Intake Air Temperature	Intake or Inlet Air Temperature
ICM	Ignition Control Module	–
IFI	Indirect Fuel Injection	Indirect Injection
IFS	Inertia Fuel–Shutoff	–
ISC	Idle Speed Control	–
KS	Knock Sensor	Knock Sensor
MAF	Mass Air Flow	Air Flow Meter
MAP	Manifold Absolute Pressure	Manifold Pressure Intake Vacuum
MC	Mixture Control	Electric Bleed Air Control Valve (EBCV) Mixture Control Valve (MCV) Electric Air Control Valve (EACV)
MDP	Manifold Differential Pressure	–
MFI	Multiport Fuel Injection	Electronic Fuel Injection (EFI)
MIL	Malfunction Indicator Lamp	Check Engine Light
MST	Manifold Surface Temperature	–
MVZ	Manifold Vacuum Zone	–
NVRAM	Non–Volatile Random Access Memory	–
O2S	Oxygen Sensor	Oxygen Sensor, O_2 Sensor (O_2S)
OBD	On–Board Diagnostic	On–Board Diagnostic (OBD)
OC	Oxidation Catalytic Converter	Oxidation Catalyst Converter (OC), CCo
OP	Open Loop	Open Loop
PAIR	Pulsed Secondary Air Injection	Air Suction (AS)
PCM	Powertrain Control Module	–
PNP	Park/Neutral Position	–
PROM	Programmable Read Only Memory	–
PSP	Power Steering Pressure	–
PTOX	Periodic Trap Oxidizer	Diesel Particulate Filter (DPF) Diesel Particulate Trap (DPT)
RAM	Random Access Memory	Random Access Memory (RAM)
RM	Relay Module	–
ROM	Read Only Memory	Read Only Memory (ROM)
RPM	Engine Speed	Engine Speed
SC	Supercharger	Supercharger
SCB	Supercharger Bypass	–
SFI	Sequential Multiport Fuel Injection	Electronic Fuel Injection (EFI), Sequential Injection
SPL	Smoke Puff Limiter	–
SRI	Service Reminder Indicator	–
SRT	System Readiness Test	–
ST	Scan Tool	–
TB	Throttle Body	Throttle Body
TBI	Throttle Body Fuel Injection	Single Point Injection Central Fuel Injection (Ci)
TC	Turbocharger	Turbocharger
TCC	Torque Converter Clutch	Torque Converter
TCM	Transmission Control Module	Transmission ECU (Electronic Control Unit)
TP	Throttle Position	Throttle Position
TR	Transmission Range	–

TVV	Thermal Vacuum Valve	Bimetallic Vacuum Switching Valve (BVSV) Thermostatic Vacuum Switching Valve (TVSV)
TWC	Three–Way Catalytic Converter	Three–Way Catalytic (TWC) CC_{RO}
TWC+OC	Three–Way + Oxidation Catalytic Converter	CC_R + CCo
VAF	Volume Air Flow	Air Flow Meter
VR	Voltage Regulator	Voltage Regulator
VSS	Vehicle Speed Sensor	Vehicle Speed Sensor (Read Switch Type)
WOT	Wide Open Throttle	Full Throttle
WU–OC	Warm Up Oxidation Catalytic Converter	–
WU–TWC	Warm Up Three–Way Catalytic Converter	Manifold Converter
3GR	Third Gear	–
4GR	Fourth Gear	–

STANDARD BOLT TORQUE SPECIFICATIONS

IN008–0D

IN

HOW TO DETERMINE BOLT STRENGTH

	Mark	Class		Mark	Class
Hexagon head bolt	 Bolt head No. 4 — 4 5 — 5 6 — 6 7 — 7 8 — 8 9 — 9 10 — 10 11 — 11	4T 5T 6T 7T 8T 9T 10T 11T	Hexagon flange bolt w/ washer hexagon bolt	 4 Protruding lines	9T
	 No mark	4T	Hexagon flange bolt w/ washer hexagon bolt	 5 Protruding lines	10T
Hexagon flange bolt w/ washer hexagon bolt	 No mark	4T	Hexagon flange bolt w/ washer hexagon bolt	 6 Protruding lines	11T
Hexagon head bolt	 2 Protruding lines	5T	Stud bolt	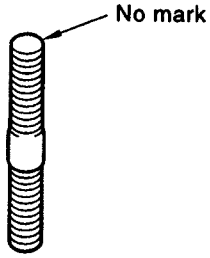 No mark	4T
Hexagon flange bolt w/ washer hexagon bolt	 2 Protruding lines	6T		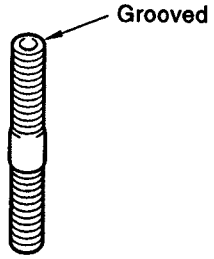 Grooved	6T
Hexagon head bolt	 3 Protruding lines	7T	Welded bolt	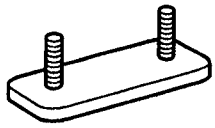	4T
Hexagon head bolt	 4 Protruding lines	8T			

V06821

SPECIFIED TORQUE FOR STANDARD BOLTS

Class	Diameter mm	Pitch mm	Specified torque					
			Hexagon head bolt			Hexagon flange bolt		
			N·m	kgf·cm	ft·lbf	N·m	kgf·cm	ft·lbf
4T	6	1	5	55	48 in.·lbf	6	60	52 in.·lbf
	8	1.25	12.5	130	9	14	145	10
	10	1.25	26	260	19	29	290	21
	12	1.25	47	480	35	53	540	39
	14	1.5	74	760	55	84	850	61
	16	1.5	115	1,150	83	–	–	–
5T	6	1	6.5	65	56 in.·lbf	7.5	75	65 in.·lbf
	8	1.25	15.5	160	12	17.5	175	13
	10	1.25	32	330	24	36	360	26
	12	1.25	59	600	43	65	670	48
	14	1.5	91	930	67	100	1,050	76
	16	1.5	140	1,400	101	–	–	–
6T	6	1	8	80	69 in.·lbf	9	90	78 in.·lbf
	8	1.25	19	195	14	21	210	15
	10	1.25	39	400	29	44	440	32
	12	1.25	71	730	53	80	810	59
	14	1.5	110	1,100	80	125	1,250	90
	16	1.5	170	1,750	127	–	–	–
7T	6	1	10.5	110	8	12	120	9
	8	1.25	25	260	19	28	290	21
	10	1.25	52	530	38	58	590	43
	12	1.25	95	970	70	105	1,050	76
	14	1.5	145	1,500	108	165	1,700	123
	16	1.5	230	2,300	166	–	–	–
8T	8	1.25	29	300	22	33	330	24
	10	1.25	61	620	45	68	690	50
	12	1.25	110	1,100	80	120	1,250	90
9T	8	1.25	34	340	25	37	380	27
	10	1.25	70	710	51	78	790	57
	12	1.25	125	1,300	94	140	1,450	105
10T	8	1.25	38	390	28	42	430	31
	10	1.25	78	800	58	88	890	64
	12	1.25	140	1,450	105	155	1,600	116
11T	8	1.25	42	430	31	47	480	35
	10	1.25	87	890	64	97	990	72
	12	1.25	155	1,600	116	175	1,800	130

MAINTENANCE

PREPARATION ..... MA– 2
MAINTENANCE OPERATIONS ..... MA– 2
GENERAL MAINTENANCE MA–10
SERVICE SPECIFICATIONS MA–12

GENERAL NOTES:

- Maintenance items may vary from country to country. Check the manual or guide in which the maintenance schedule is shown.
- Every service item in the periodic maintenance schedule must be performed.
- Periodic maintenance service must be performed according to whichever interval in the periodic maintenance schedule occurs first, the odometer reading (miles) or the time interval (months).
- Maintenance services after the last period should be performed at the same interval as before unless otherwise noted.
- Failure to do even one item can cause the engine to run poorly and increase exhaust emissions.

PREPARATION

EQUIPMENT

MA01Q–08

Mirror	Brake hose
Torque wrench	

MA

MAINTENANCE OPERATIONS

MA07W–03

ENGINE

Cold Engine Operations

1. **5VZ–FE ENGINE:**
   REPLACE TIMING BELT
   (See timing belt in Engine Mechanical)
2. **INSPECT DRIVE BELTS**
   (See on–vehicle inspection in Charging System)
3. **REPLACE SPARK PLUGS**
   (See on–vehicle inspection in Ignition System)
4. **INSPECT AIR FILTER**

(a) Visually check that the air cleaner element is not excessively dirty, damaged or oily.
HINT: Oiliness may indicate a stuck PCV valve.
If necessary, replace the air cleaner element.

(b) Clean the element with compressed air.
First blow from back side thoroughly, then blow off the front side of the element.

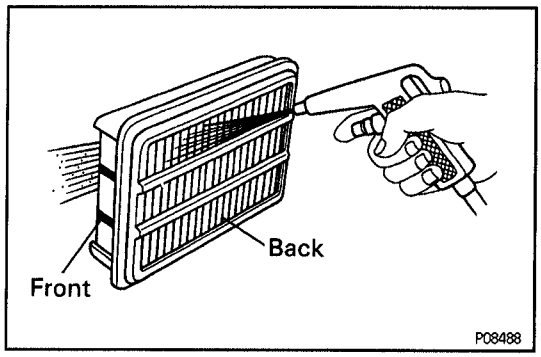

5. **REPLACE AIR FILTER**
   Replace the used air cleaner element with a new one.
6. **REPLACE ENGINE OIL AND OIL FILTER**
   (See oil and filter replacement in Lubrication System)
7. **REPLACE ENGINE COOLANT**
   (See coolant check and replacement in Cooling System
8. **INSPECT CHARCOAL CANISTER**
   (See EVAP control system in Emission Control Systems)
9. **REPLACE GASKET IN FUEL TANK CAP**
   (See EVAP control system in Emission Control Systems)
10. **INSPECT FUEL LINES AND CONNECTIONS**
    Visually inspect the fuel lines for cracks, leakage, loose connections, deformation or tank band looseness.

11. INSPECT EXHAUST PIPES AND MOUNTINGS
Visually inspect the pipes, hangers and connections for severe corrosion, leaks or damage.

12. REPLACE HEATED OXYGEN SENSOR
(See exhaust system in Engine Mechanical)

13. ADJUST VALVE CLEARANCE
(See valve clearance inspection and adjustment in Engine Mechanical)

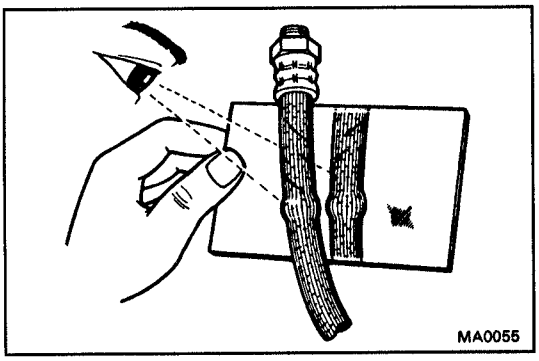

BRAKES

14. INSPECT BRAKE LINE PIPES AND HOSES
HINT: Inspect in a well – lighted area. Inspect the entire circumference and length of the brake hoses using a mirror as required. Turn the front wheels fully right or left before inspecting the front brake.

(a) Check all brake lines and hoses for:
- Damage
- Wear
- Deformation
- Cracks
- Corrosion
- Leaks
- Bends
- Twists

(b) Check all clamps for tightness and connections for leakage.

(c) Check that the hoses and lines are clear of sharp edges, moving parts and the exhaust system.

(d) Check that the lines installed in grommets pass through the center of the grommets.

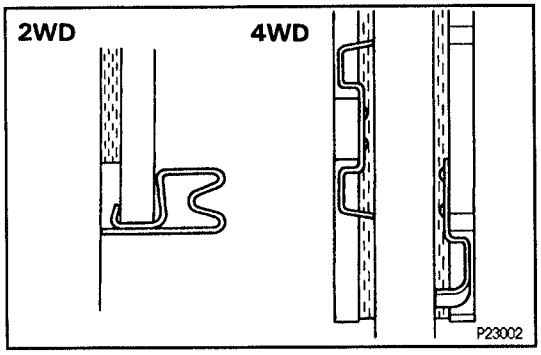

15. INSPECT FRONT BRAKE PADS AND DISCS
(See BR section)
HINT: If a squealing or scraping noise occurs from the brake during driving, check the pad wear indicator. If there are traces of the indicator contacting the disc rotor, the disc pad should be replaced.

16. INSPECT REAR BRAKE LININGS AND DRUMS
(See BR section)

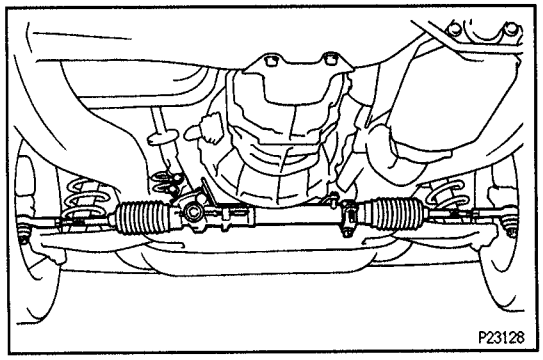

CHASSIS

17. INSPECT STEERING LINKAGE

(a) Check the steering wheel freeplay (See SR section).

(b) Check the steering linkage for looseness or damage. Check that:
- Tie rod ends do not have excessive play.
- Dust seals and boots are not damaged.
- Boot clamps are not loose.

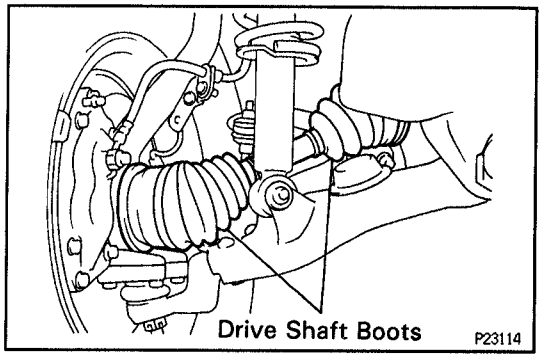

18. INSPECT SRS AIRBAG
(See RS section)

19. INSPECT STEERING GEAR HOUSING
Check the steering gear housing for oil leaks.
If leakage is found, check for cause and repair.

20. 4WD:
INSPECT DRIVE SHAFT BOOTS
Inspect the drive shaft boots for clamp looseness, grease leakage or damage.

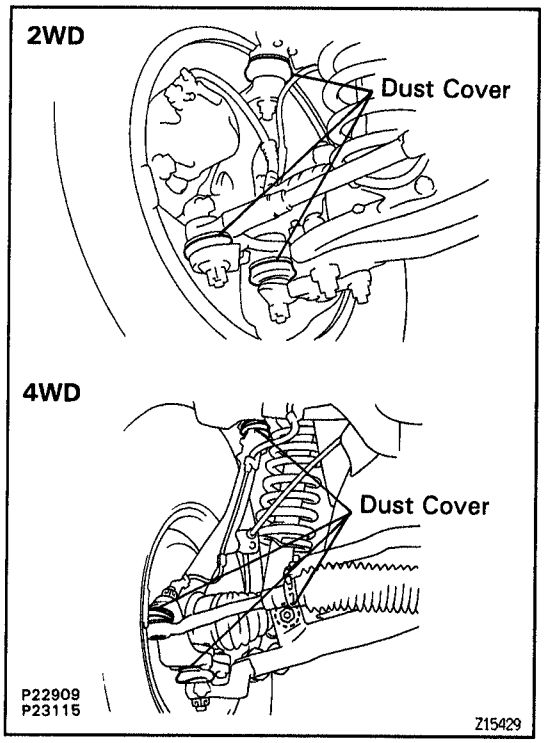

21. INSPECT BALL JOINTS AND DUST COVERS
(a) Inspect the ball joints for excessive looseness.
(See SA section)
(b) Inspect the dust cover for damage.

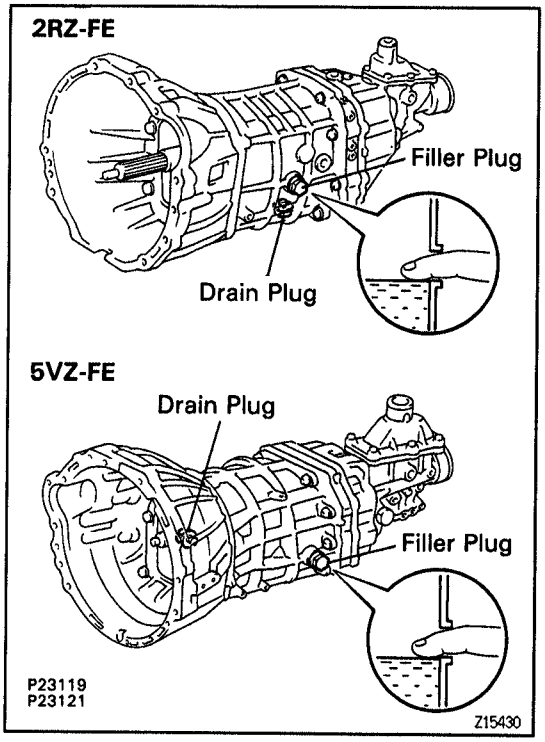

22. 2WD:
CHECK OIL LEVEL IN MANUAL TRANSMISSION, AUTOMATIC TRANSMISSION AND DIFFERENTIAL
(a) Manual transmission:
Remove the filler plug and feel inside the hole with your finger. Check that the oil comes to within 5 mm (0.20 in.) of the bottom edge of the hole. If the level is low, add oil until it begins to run out of the filler hole.
Transmission oil (M/T):
See MT section

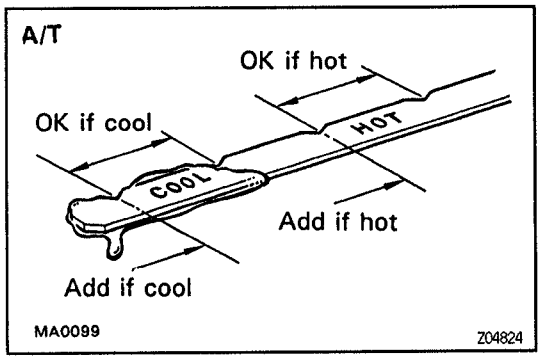

(b) Automatic transmission:
Check that the fluid level is in the "HOT" range at the normal operating temperature (70 – 80°C or 158 – 176°F) and add as necessary.
NOTICE: Do not overfill.
Transmission fluid (A/T):
See AT section

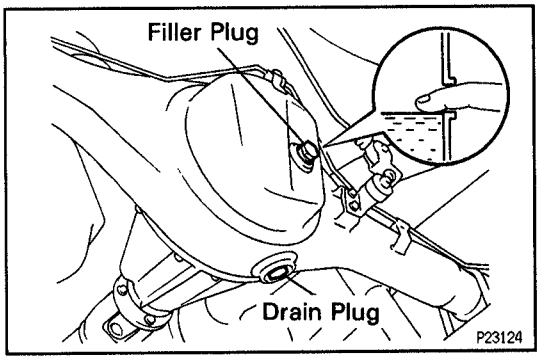

(c) Differential:
Remove the filler plug and feel inside the hole with your finger. Check that the oil comes to within 5 mm (0.20 in.) of the bottom edge of the hole. If the level is low, add oil until it begins to run out of the filler hole.
Differential oil:
See SA section

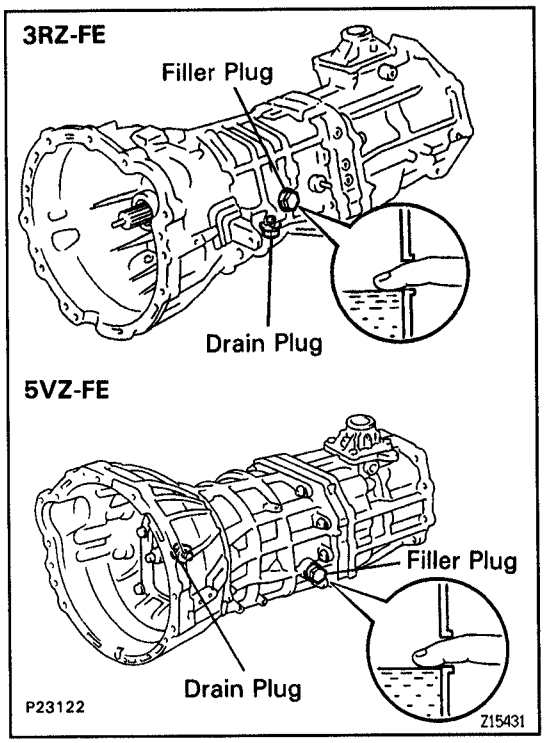

23. 4WD:
CHECK OIL LEVEL IN MANUAL TRANSMISSION, AUTOMATIC TRANSMISSION, TRANSFER AND DIFFERENTIAL

(a) Manual transmission:
Remove the filler plug and feel inside the hole with your finger. Check that the oil comes to within 5 mm (0.20 in.) of the bottom edge of the hole. If the level is low, add oil until it begins to run out of the filler hole.
Transmission oil (M/T):
See MT section

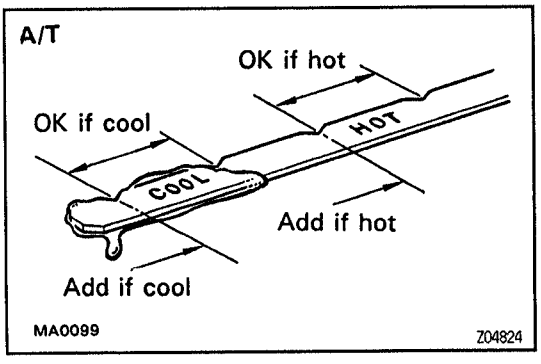

(b) Automatic transmission:
Check that the fluid level is in the "HOT" range at the normal operating temperature (70 – 80°C or 158 – 176°F) and add as necessary.
NOTICE: Do not overfill.
Transmission fluid (A/T):
See AT section

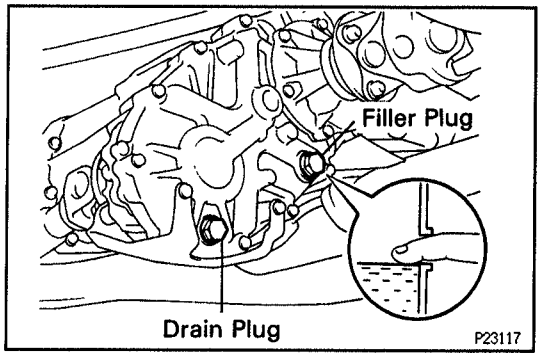

(c) Transfer:
Remove the filler plug and feel inside the hole with your finger. Check that the oil comes to within 5 mm (0.20 in.) of the bottom edge of the hole. If the level is low, add oil until it begins to run out of the filler hole.
Transfer oil:
See TR section

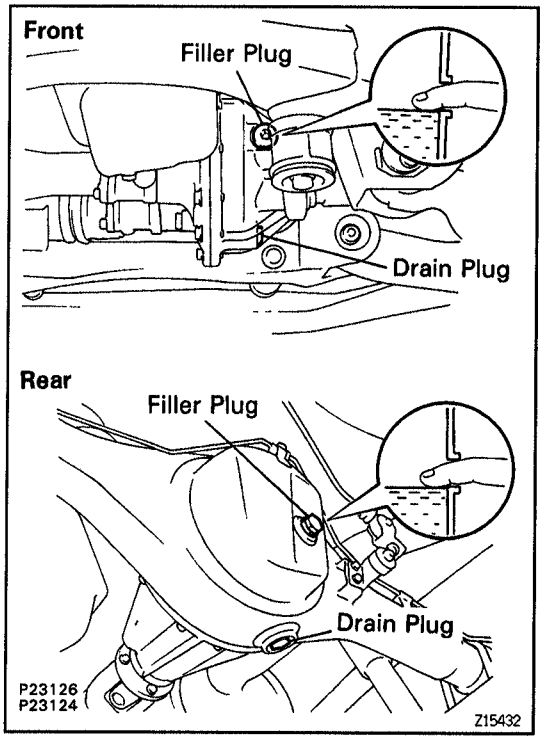

(d) Differential:
Remove the filler plug and feel inside the hole with your finger. Check that the oil comes to within 5 mm (0.20 in.) of the bottom edge of the hole. If the level is low, add oil until it begins to run out of the filler hole.
Differential:
See SA section

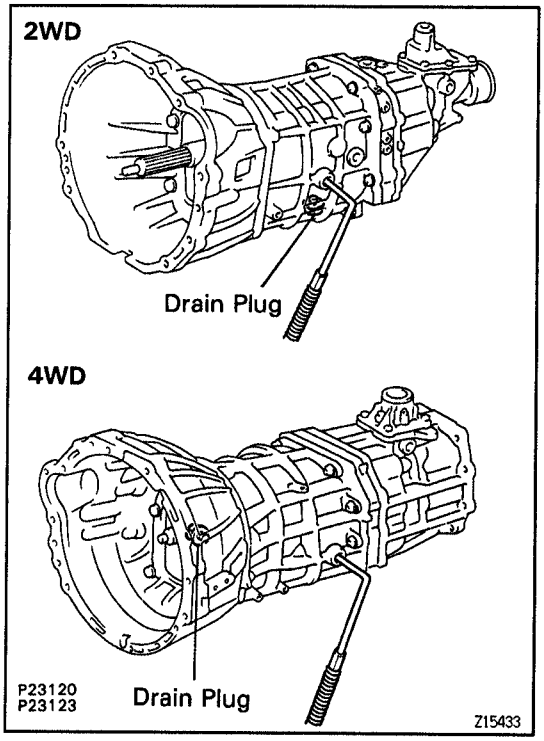

24. REPLACE MANUAL TRANSMISSION, TRANSFER (4WD) AND DEFFERENTIAL OIL

(a) Transfer:
Remove the transfer cover.
(b) Remove the drain plug and drain the oil.
(c) Reinstall drain plug securely.
(d) Add new oil until it begins to run out of the filler hole.
Transmission oil (M/T):
See MT section

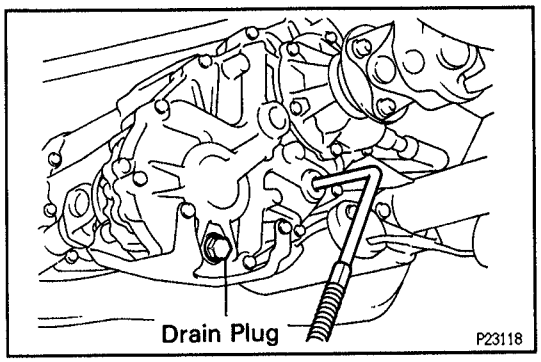

Transfer oil:

See TR section

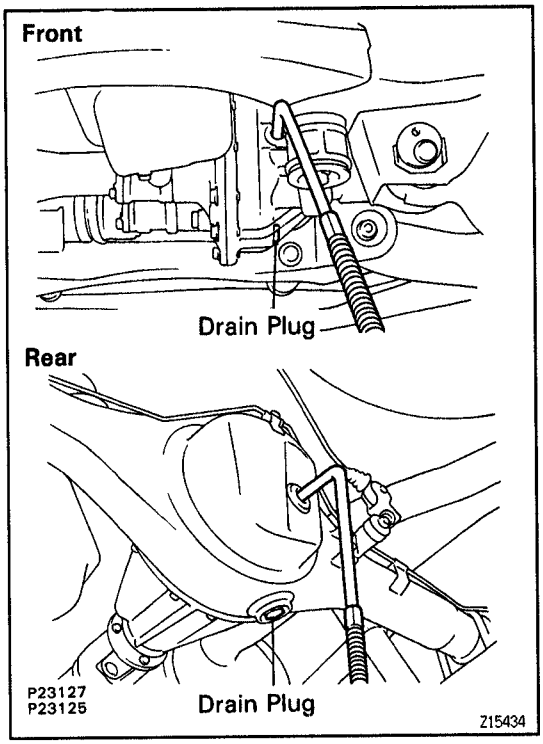

Differential oil

See SA section

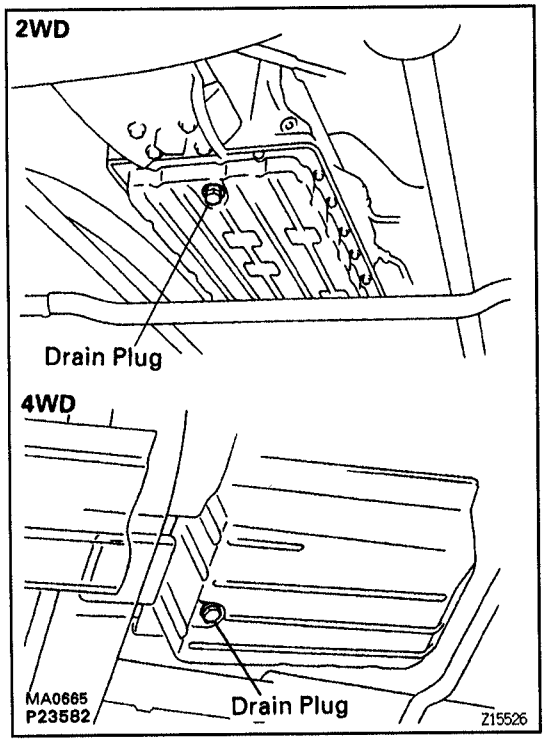

25. REPLACE AUTOMATIC TRANSMISSION FLUID

(a) Remove the drain plug(s) and drain the fluid.

(b) Reinstall the drain plug(s) securely.

(c) With the engine OFF, add new fluid through the oil filler pipe.

Transmission fluid (A/T):

See AT section

(d) Start the engine and shift the selector into all positions from "P" through "L" and then shift into "P".

(e) With the engine idling, check the fluid level.
Add fluid up to the "COOL" level on the dipstick.

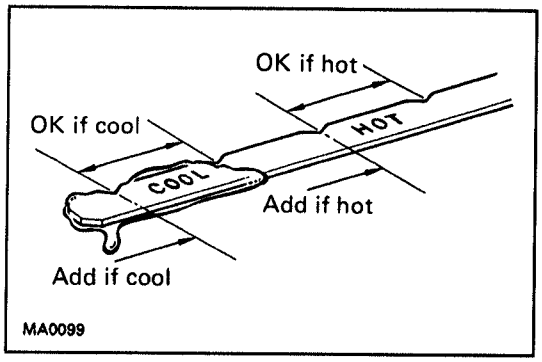

(f) Check that the fluid level is in the "HOT" range at the normal operating temperature (70 – 80°C or 158 – 176°F) and add as necessary.
NOTICE: Do not overfill.

26. REPACK FRONT WHEEL BEARINGS AND THRUST BUSH
(See SA section)

27. 4WD:
LUBRICATE PROPELLER SHAFT
Lubricate propeller shaft, referring to the lubrication chart. Before pumping in grease, wipe off any mud and dust on the grease fitting.
Grease grade:
Spiders
Lithium base chassis grease NLGI No.2
Slide yoke and double–cardan joint
Molybdenum–disulphidelithium base chassis grease NLGI No.2

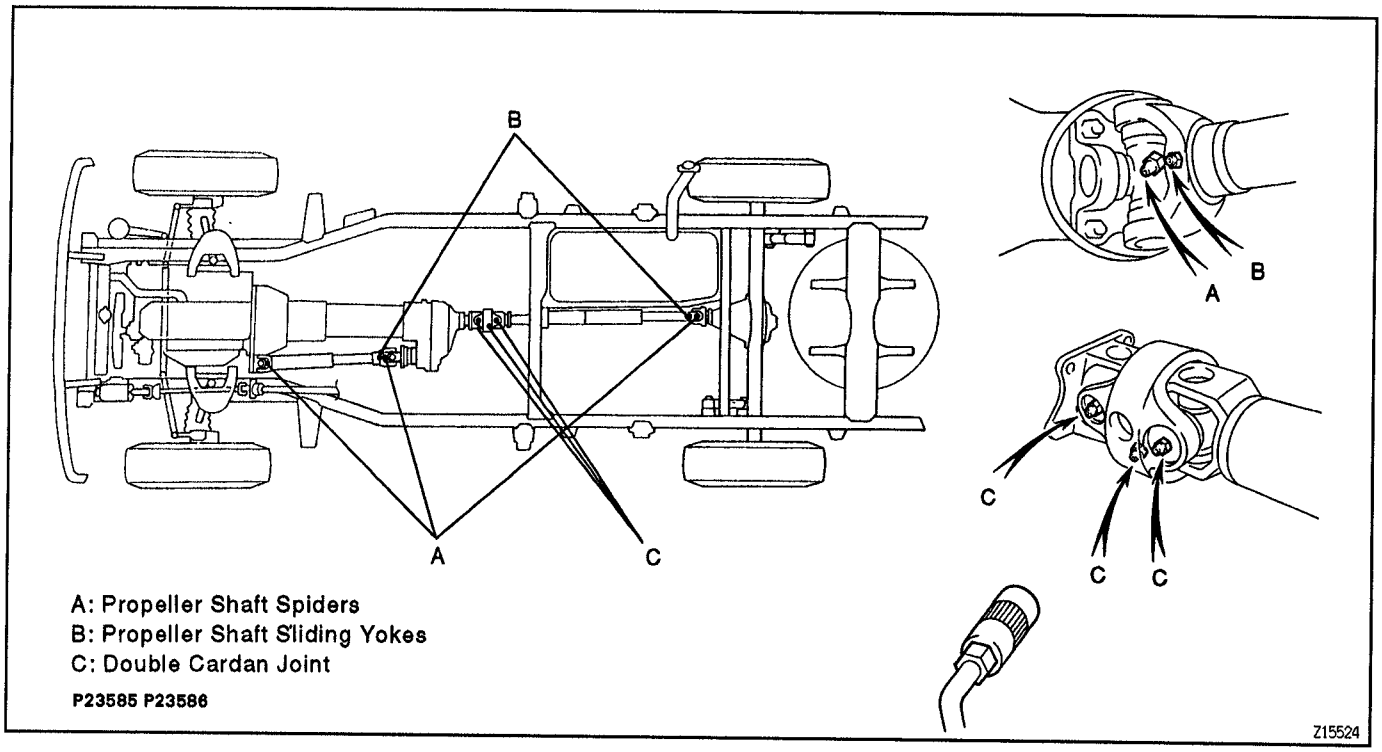

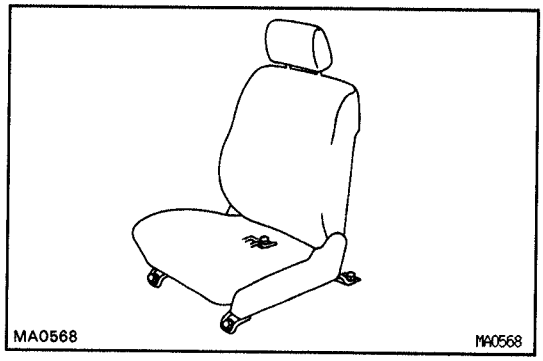

28. TIGHTEN BOLTS AND NUTS ON CHASSIS AND BODY
Tighten these parts:
- Seat mounting bolts

Torque: 37 N·m (375 kgf·cm, 27 ft·lbf)

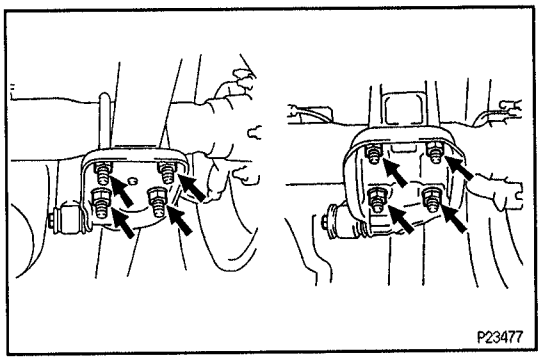

- Leaf spring U–bolt mounting nuts

Torque: 120 N·m (1,220 kgf·cm, 88 ft·lbf)

Under Severe Conditions:

In addition to the above maintenance items, check for loose or missing bolts and nuts on the following.

- Steering system
- Drive train
- Suspension system
- Fuel tank mounts
- Engine mounts, etc.

29. FINAL INSPECTION

(a) Check operation of body parts:

- Hood:
  Auxiliary catch operates properly
  Hood locks securely when closed
- Doors:
  Door locks operate properly
  Doors close properly
- Seats:
  Seat adjusts easily and locks securely in any positions
  Seat backs lock securely at any angle
  Fold–down seat backs lock securely

(b) Road test:

- Engine and chassis parts do not have abnormal noises.
- Vehicle does not wander or pull to one side.
- Brakes work properly and do not drag.

(c) Be sure to deliver a clean vehicle and especially check:

- Steering wheel
- Shift lever knob
- All switch knobs
- Door handles
- Seats

GENERAL MAINTENANCE

MA02R-0A

These are maintenance and inspection items which are considered to be the owner's responsibility.

They can be done by the owner or they can have them done at a service shop.

These items include those which should be checked on a daily basis, those which, in most cases, do not require (special) tools and those which are considered to be reasonable for the owner to do.

Items and procedures for general maintenance are as follows.

OUTSIDE VEHICLE

1. TIRES

(a) Check the pressure with a gauge. If necessary, adjust.

(b) Check for cuts, damage or excessive wear.

2. WHEEL NUTS

When checking the tires, check the nuts for looseness or for missing nuts. If necessary, tighten them.

3. TIRE ROTATION

It is recommended that the tires be rotated every 6,200 miles (10,000 km).

4. WINDSHIELD WIPER BLADES

Check for wear or cracks whenever they do not wipe clean. If necessary, replace.

5. FLUID LEAKS

(a) Check underneath for leaking fuel, oil, water or other fluid.

(b) If you smell gasoline fumes or notice any leak, have the cause found and corrected.

6. DOORS AND ENGINE HOOD

(a) Check that all doors and the tailgate operate smoothly, and that all latches lock securely.

(b) Check that the engine hood secondary latch secures the hood from opening when the primary latch is released.

INSIDE VEHICLE

7. LIGHTS

(a) Check that the headlights, stop lights, taillights, turn signal lights, and other lights are all working.

(b) Check the headlight aim.

8. WARNING LIGHTS AND BUZZERS

Check that all warning lights and buzzers function properly.

9. HORN

Check that it is working.

10. WINDSHIELD GLASS

Check for scratches, pits or abrasions.

11. WINDSHIELD WIPER AND WASHER

(a) Check operation of the wipers and washer.

(b) Check that the wipers do not streak.

12. WINDSHIELD DEFROSTER

Check that air comes out from the defroster outlet when operating the heater or air conditioner.

13. REAR VIEW MIRROR

Check that it is mounted securely.

14. SUN VISORS

Check that they move freely and are mounted securely.

15. STEERING WHEEL

Check that it has the specified freeplay. Be alert for changes in steering condition, such as hard steering, excessive freeplay or strange noises.

16. SEATS

(a) Check that the seat adjusters operate smoothly.

(b) Check that all latches lock securely in any position.

(c) Check that the head restraints move up and down smoothly and that the locks hold securely in any latch position.

(d) For fold—down seat backs, check that the latches lock securely.

17. SEAT BELTS

(a) Check that the seat belt system such as the buckles, retractors and anchors operate properly and smoothly.

(b) Check that the belt webbing is not cut, frayed, worn or damaged.

18. ACCELERATOR PEDAL
Check the pedal for smooth operation and uneven pedal effort or catching.

19. CLUTCH PEDAL (See CL section)
Check the pedal for smooth operation.
Check that the pedal has the proper free-play.

20. BRAKE PEDAL (See BR section)
(a) Check the pedal for smooth operation.
(b) Check that the pedal has the proper reserve distance and freeplay.
(c) Check the brake booster function.

21. BRAKES
At a safe place, check that the brakes do not pull to one side when applied.

22. PARKING BRAKE (See BR section)
(a) Check that the lever has the proper travel.
(b) On a safe incline, check that the vehicle is held securely with only the parking brake applied.

23. AUTOMATIC TRANSMISSION "PARK" MECHANISM
(a) Check the lock release button of the selector lever for proper and smooth operation.
(b) On a safe incline, check that the vehicle is held securely with the selector lever in "P" position and all brakes released.

UNDER HOOD

24. WINDSHIELD WASHER FLUID
Check that there is sufficient fluid in the tank.

25. ENGINE COOLANT LEVEL
Check that the coolant level is between the "FULL" and "LOW" lines on the see–through reservoir.

26. RADIATOR AND HOSES
(a) Check that the front of the radiator is clean and not blocked with leaves, dirt or bugs.
(b) Check the hoses for cracks, kinks, rot or loose connections.

27. BATTERY ELECTROLYTE LEVEL
Check that the electrolyte level of all battery cells is between the upper and lower level lines on the case.

28. BRAKE AND CLUTCH FLUID LEVELS
Check that the brake and clutch fluid levels are near the upper level line on the see–through reservoirs.

29. ENGINE DRIVE BELTS
Check all drive belts for fraying, cracks, wear or oiliness.

30. ENGINE OIL LEVEL
Check the level on the dipstick with the engine turned off.

31. POWER STEERING FLUID LEVEL
Check the level on the dipstick.
The level should be in the "HOT" or "COLD" range depending on the fluid temperature.

32. AUTOMATIC TRANSMISSION FLUID LEVEL
(a) Park the vehicle on a level surface.
(b) With the engine idling and the parking brake applied, shift the selector into all positions from "P" to "L", and then shift into "P" position.
(c) Pull out the dipstick and wipe off the fluid with a clean rag. Re–insert the dipstick and check that the fluid level is in the HOT range.
(d) Do this check with the fluid at normal driving temperature (70 – 80°C, 158 – 176°F).
HINT: Wait until the engine cools down (approx. 30 min.) before checking the fluid level after extended driving at high speeds, in hot weather, in heavy traffic or pulling a trailer.

33. EXHAUST SYSTEM
Visually inspect for cracks, holes or loose supports.
If any change in the sound of the exhaust or smell of the exhaust fumes is noticed, have the cause located and corrected.

SERVICE SPECIFICATIONS

TORQUE SPECIFICATIONS

MA06U-06

Part tightened	N·m	kgf·cm	ft·lbf
Front seat mount bolts	37	375	27
Leaf spring U—bolt mounting nuts	120	1,220	88

2RZ-FE, 3RZ-FE ENGINE

ENGINE MECHANICAL
- PREPARATION ..... EG- 2
- IDLE AND/OR 2,500 RPM CO/HC CHECK ..... EG- 6
- COMPRESSION CHECK ..... EG- 7
- VALVE CLEARANCE INSPECTION AND ADJUSTMENT ..... EG- 8
- IGNITION TIMING INSPECTION EG-13
- IDLE SPEED INSPECTION EG-14
- CYLINDER HEAD EG-15
- TIMING CHAIN EG-46
- CYLINDER BLOCK EG-61
- EXHAUST SYSTEM EG-102
- SERVICE SPECIFICATIONS EG-104

EMISSION CONTROL SYSTEMS
- SYSTEM PURPOSE EG-110
- PREPARATION EG-110
- LAYOUT AND SCHEMATIC DRAWING EG-111
- POSITIVE CRANKCASE VENTILATION (PCV) SYSTEM EG-112
- EVAPORATIVE EMISSION (EVAP) CONTROL SYSTEM EG-112
- EXHAUST GAS RECIRCULATION (EGR) SYSTEM EG-115
- THREE-WAY CATALYTIC CONVERTER (TWC) SYSTEM EG-118
- SERVICE SPECIFICATIONS EG-118

MFI SYSTEM
- PRECAUTION EG-119
- PREPARATION EG-122
- FUEL PUMP EG-124
- FUEL PRESSURE REGULATOR EG-129
- INJECTOR EG-130
- FUEL TANK AND LINE EG-136
- THROTTLE BODY EG-138
- IDLE AIR CONTROL (IAC) VALVE EG-143
- MASS AIR FLOW (MAF) METER EG-145
- EFI MAIN RELAY EG-146
- CIRCUIT OPENING RELAY EG-147
- ENGINE COOLANT TEMPERATURE (ECT) SENSOR EG-148
- INTAKE AIR TEMPERATURE (IAT) SENSOR EG-149
- VAPOR PRESSURE SENSOR (3RZ-FE) EG-150
- KNOCK SENSOR EG-151
- VSV FOR EVAP EG-152
- VSV FOR EGR EG-153
- VSV FOR VAPOR PRESSURE SENSOR (3RZ-FE) EG-154
- EGR GAS TEMPERATURE SENSOR EG-155
- HEATED OXYGEN SENSOR EG-156
- ENGINE CONTROL MODULE (ECM) EG-157
- FUEL CUT RPM EG-158
- SERVICE SPECIFICATIONS EG-159

COOLING SYSTEM
- PREPARATION EG-161
- COOLANT CHECK AND REPLACEMENT EG-161
- WATER PUMP EG-163
- THERMOSTAT EG-166
- RADIATOR EG-168
- SERVICE SPECIFICATIONS EG-172

LUBRICATION SYSTEM
- PREPARATION EG-173
- OIL PRESSURE CHECK EG-174
- OIL AND FILTER REPLACEMENT EG-175
- OIL PUMP EG-177
- SERVICE SPECIFICATIONS EG-183

ENGINE TROUBLESHOOTING EG-184

ENGINE MECHANICAL

PREPARATION

SST (SPECIAL SERVICE TOOLS)

EG0AY–1X

	09032–00100 Oil Pan Seal Cutter	
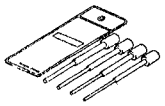	09201–10000 Valve Guide Bushing Remover & Replacer Set	
	(09201–01060) Valve Guide Bushing Remover & Replacer 6	
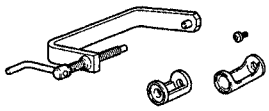	09202–70020 Valve Spring Compressor	
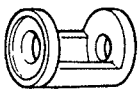	(09202–00010) Attachment	
	09207–76010 Rocker Arm Bushing	
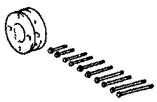	09213–54015 Crankshaft Pulley Holding Tool	
	09223–15030 Oil Seal & Bearing Replacer	Crankshaft rear oil seal
	09236–00101 Water Pump Overhaul Tool Set	
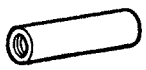	(09236–15010) Bearing Stay	Valve stem oil seal
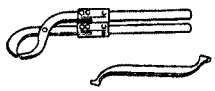	09248–55040 Valve Clearance Adjust Tool Set	
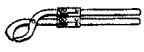	(09248–05410) Valve Lifter Press	

	(09248–05420) Valve Lifter Stopper	
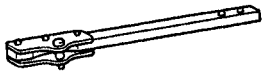	09330–00021 Companion Flange Holding Tool	Crankshaft pulley
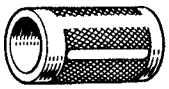	09636–20010 Upper Ball Joint Dust Cover Replacer	Crankshaft timing gear
	09816–30010 Oil Pressure Switch Socket	Knock sensor
	09843–18020 Diagnosis Check Wire	
	09950–40010 Puller B Set	Crankshaft timing gear
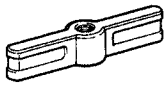	(09951–04010) Hanger 150	
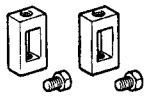	(09952–04010) Slide Arm	
	(09953–04010) Center Bolt 100	
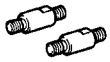	(09954–04010) Arm 25	
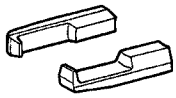	(09955–04060) Claw No.6	
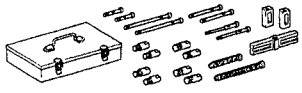	09950–50010 Puller C Set	Crankshaft pulley
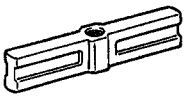	(09951–05010) Hanger 150	
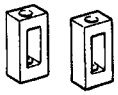	(09952–05010) Slide Arm	

	(09953–05010) Center Bolt 100	
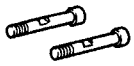	(09954–05020) Claw No.2	
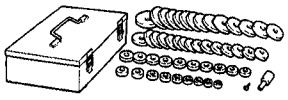	09950–60010 Replacer Set	Spark plug tube gasket
	(09951–00260) Replacer 26	
	(09951–00490) Replacer 49	
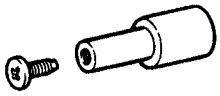	(09952–06010) Adapter	
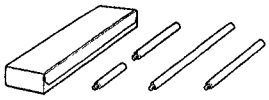	09950–70010 Handle Set	
	(09951–07150) Handle 150	Valve guide bushing Spark plug tube gasket Crankshaft rear oil seal
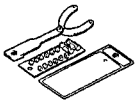	09960–10010 Variable Pin Wrench Set	
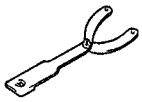	(09962–01000) Variable Pin Wrench Arm Assy	
	(09963–00500) Pin 5	Exhaust camshaft sub–gear
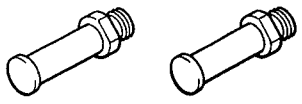	(09963–01000) Pin 10	PS pump pulley

RECOMMENDED TOOLS

EG0AZ–1E

	09082–00050 TOYOTA Electrical Tester Set.	

	09200–00010 Engine Adjust Kit .	
	09258–00030 Hose Plug Set .	Plug for the vacuum hose, fuel hose etc.

EG080–1C

EQUIPMENT

Caliper gauge	
CO/HC meter	
Compression gauge	
Connecting rod aligner	
Cylinder gauge	
Dial indicator	
Dye penetrant	
Engine tune–up tester	
Heater	
Magnetic finger	
Micrometer	
OBD II scan tool	Engine speed
Piston ring compressor	
Piston ring expander	
Plastigage	
Precision straight edge	
Soft brush	
Spring tester	Valve spring
Steel square	Valve spring
Thermometer	
Torque wrench	
V–block	
Valve seat cutter	
Vernier calipers	

EG081–2F

SSM (SPECIAL SERVICE MATERIALS)

08826–00080	Seal Packing Black or equivalent (FIPG)	Over space between cylinder head and timing chain cover Semi–circular plug Oil pan, Rear oil seal retaine
08833–00070	Adhesive 1324, THREE BOND 1324 or equivalent	Spark plug tube Drive plate bolt
08833–00080	Adhesive 1344, THREE BOND 1344, LOCTITE 242 or equivalent	Oil pressure switch

EG

IDLE AND/OR 2,500 RPM CO/HC CHECK

EG5MB–02

HINT: This check is used only to determine whether or not the idle CO/HC complies with regulations.

1. **INITIAL CONDITIONS**

(a) Engine at normal operating temperature
(b) Air cleaner installed
(c) All pipes and hoses of air induction system connected
(d) All accessories switched OFF
(e) All vacuum lines properly connected
HINT: All vacuum hoses for EGR systems, etc. should be properly connected.
(f) MFI system wiring connectors fully plugged
(g) Ignition timing check correctly
(h) Transmission in neutral position
(i) Tachometer and CO/HC meter calibrated by hand

2. **START ENGINE**
3. **RACE ENGINE AT 2,500 RPM FOR APPROX. 180 SECONDS**
4. **INSERT CO/HC METER TESTING PROBE AT LEAST 40 cm (1.3 ft) INTO TAILPIPE DURING IDLING**
5. **IMMEDIATELY CHECK CO/HC CONCENTRATION AT IDLE AND/OR 2,500 RPM**
HINT: When doing the 2 mode (idle and 2,500 rpm) test, these measurement order prescribed by the applicable local regulations.

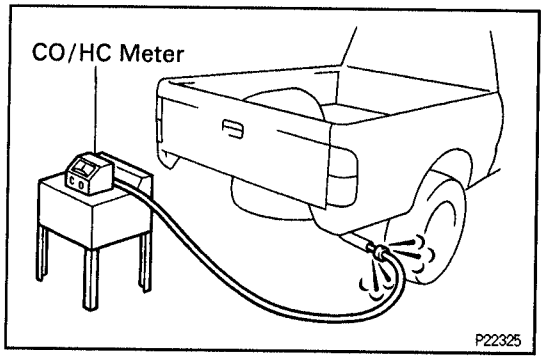

Troubleshooting

If the CO/HC concentration does not comply with regulations, troubleshoot according to the table on the next page.

(a) Check heated oxygen sensor operation.
(b) Check and correct the cause if necessary.

HC	CO	Symptoms	Causes
High	Normal	Rough idle	1. Faulty ignition: • Incorrect timing • Fouled, shorted or improperly gapped plugs • Open or crossed high–tension cords • Cracked distributor cap 2. Incorrect valve clearance 3. Leaky EGR valve 4. Leaky exhaust valves 5. Leaky cylinder
High	Low	Rough idle (Fluctuating HC reading)	1. Vacuum leak: • Vacuum hose • Intake manifold • Intake chamber • PCV line • Throttle body
High	High	Rough idle (Black smoke from exhaust)	1. Clogged air filter 2. Plugged PCV valve 3. Faulty MFI system • Faulty fuel pressure regulator • Clogged fuel return line • Faulty MAF meter • Defective ECT sensor • Defective IAT sensor • Faulty engine control module (ECM) • Faulty injector

V04904

COMPRESSION CHECK

EG64C–01

HINT: If there is lack of power, excessive oil consumption or poor fuel economy, measure the compression pressure.

1. **WARM UP AND STOP ENGINE**
2. **REMOVE INTAKE AIR CONNECTOR**
   (See steps 2 to 4 in cylinder head removal)
3. **DISCONNECT HIGH–TENSION CORDS FROM SPARK PLUGS**
   NOTICE: Pulling on or bending the cords may damage the conductor inside.
4. **REMOVE SPARK PLUGS**

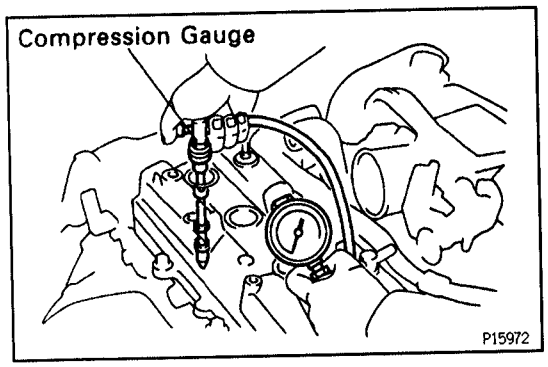

5. **CHECK CYLINDER COMPRESSION PRESSURE**

(a) Insert a compression gauge into the spark plug hole.
(b) Fully open the throttle.
(c) While cranking the engine, measure the compression pressure.
HINT: Always use a fully charged battery to obtain engine speed of 250 rpm or more.
(d) Repeat steps (a) through (c) for each cylinder.

NOTICE: This measurement must be done in as short a time as possible.

Compression pressure:

1,230 kPa (12.5 kgf/cm², 178 psi) or more

Minimum pressure:

880 kPa (9.0 kgf/cm², 127 psi)

Difference between each cylinder:

98 kPa (1.0 kgf/cm², 14 psi) or less

(e) If the cylinder compression in one or more cylinders is low, pour a small amount of engine oil into the cylinder through the spark plug hole and repeat steps (a) through (c) for cylinders with low compression.

- If adding oil helps the compression, chances are that the piston rings and/or cylinder bore are worn or damage.
- If pressure stays low, a valve may be sticking or seating is improper, or there may be leakage past the gasket.

6. **REINSTALL SPARK PLUGS**
   Torque: 19 N·m (200 kgf·cm, 14 ft·lbf)
7. **REINSTALL HIGH–TENSION CORDS TO SPARK PLUGS**
8. **REINSTALL INTAKE AIR CONNECTOR**
   (See steps 34 to 36 in cylinder head installation)

VALVE CLEARANCE INSPECTION AND ADJUSTMENT

EG64D-01

HINT: Inspect and adjust the valve clearance when the engine is cold.

1. **REMOVE INTAKE AIR CONNECTOR**
   (See steps 2 to 4 in cylinder head removal)
2. **REMOVE PCV HOSES**
3. **DISCONNECT HIGH–TENSION CORDS FROM SPARK PLUGS**
   NOTICE: Pulling on or bending the cords may damage the conductor inside.
4. **DISCONNECT ENGINE WIRE**

(a) Disconnect these connectors:

- w/ A/C:
  A/C compressor connector
- Oil pressure sensor connector
- Engine coolant temperature sender gauge connector
- Distributor connector

(b) Disconnect the 4 engine wire clamps and engine wire.

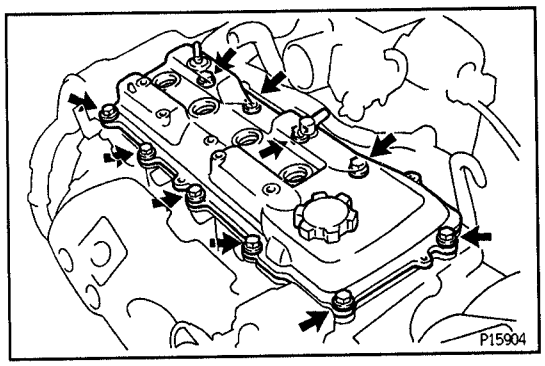

5. REMOVE CYLINDER HEAD COVER

Remove the 10 bolts, seal washers, cylinder head cover and gasket.

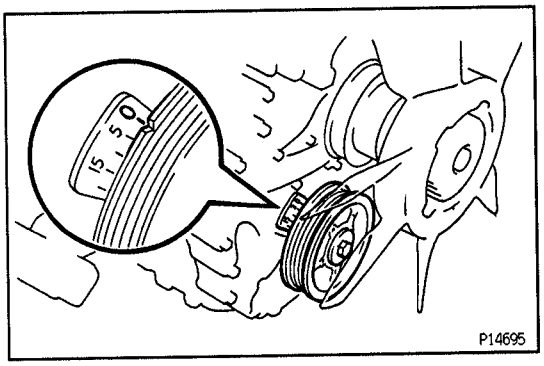

6. SET NO.1 CYLINDER TO TDC/COMPRESSION

(a) Turn the crankshaft pulley clockwise and align its groove with the "0" mark on the timing chain cover.

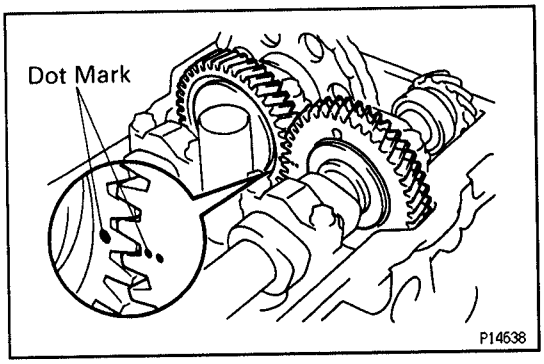

(b) Check that the timing marks (1 and 2 dots) of the camshaft drive and driven gears are in straight line on the cylinder head surface as shown in the illustration. If not, turn the crankshaft 1 revolution (360°) and align the marks as above.

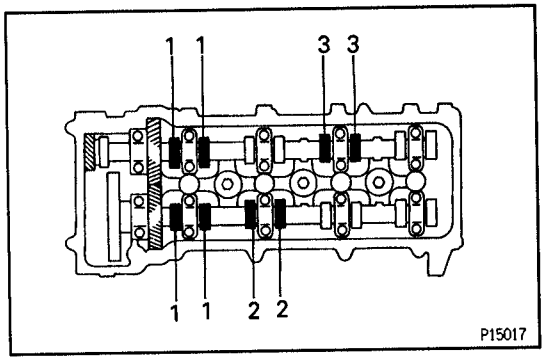

7. INSPECT VALVE CLEARANCE

(a) Check only the valves indicated.

- Using a thickness gauge, measure the clearance between the valve lifter and camshaft.
- Record the out – of – specification valve clearance measurements. They will be used later to determine the required replacement adjusting shim.

Valve clearance (Cold):

Intake

0.15 – 0.25 mm (0.006 – 0.010 in.)

Exhaust

0.25 – 0.35 mm (0.010 – 0.014 in.)

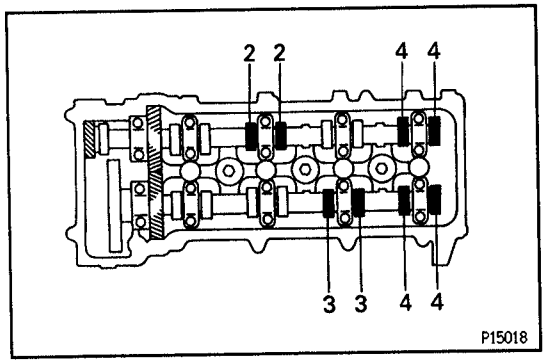

(b) Turn the crankshaft pulley 1 revolution (360°) and align its groove with timing mark "0" of the timing chain cover.

(c) Check only the valves indicated as shown. Measure the valve clearance. (See procedure in step (a))

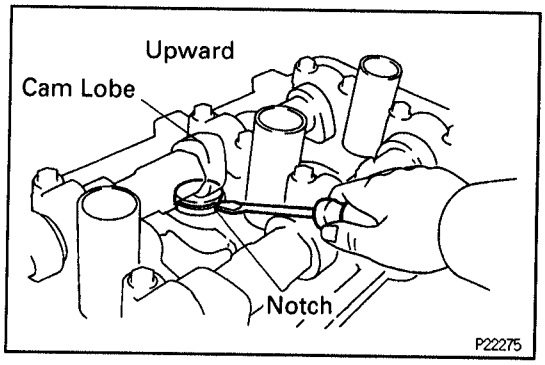

EG

8. ADJUST VALVE CLEARANCE

(a) Remove the adjusting shim.

- Turn the crankshaft to position the cam lobe of the camshaft on the adjusting valve upward.
- Position the notch of the valve lifter toward the spark plug side.

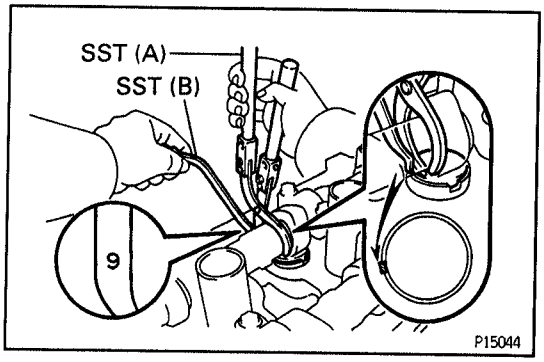

- Using SST (A), press down the valve lifter and place SST (B) between the camshaft and valve lifter flange. Remove SST (A).

SST 09248–55040 (09248–05410, 09248–05420)

HINT:

- Apply SST (B) at slight angle on the side marked with "9", at the position shown in the illustration.

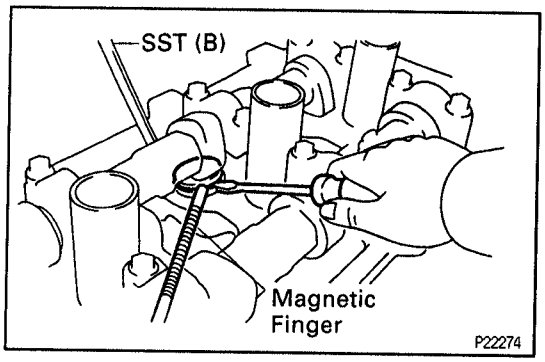

- Remove the adjusting shim with a small screwdriver and magnetic finger.

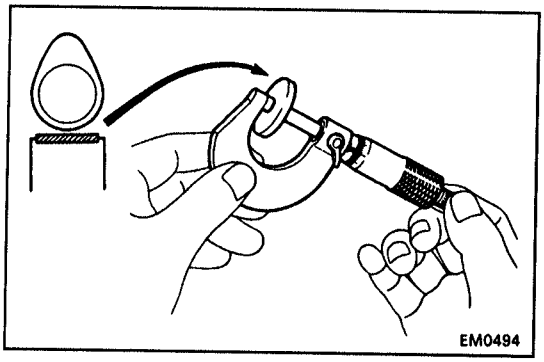

(b) Determine the replacement adjusting shim size by these Formula or Charts:

- Using a micrometer, measure the thickness of the removed shim.
- Calculate the thickness of a new shim so that the valve clearance comes within the specified value.

T ..... Thickness of removed shim
A ..... Measured valve clearance
N ..... Thickness of new shim

Intake:

N=T + (A – 0.20 mm (0.008 in.))

Exhaust:

N=T + (A – 0.30 mm (0.012 in.))

- Select a new shim with a thickness as close as possible to the calculated value.

HINT: Shims are available in 17 sized in increments of 0.05 mm (0.0020 in.), from 2.50 mm (0.0984 in.) to 3.30 mm (0.1299 in.).

Adjusting Shim Selection Chart (Intake)

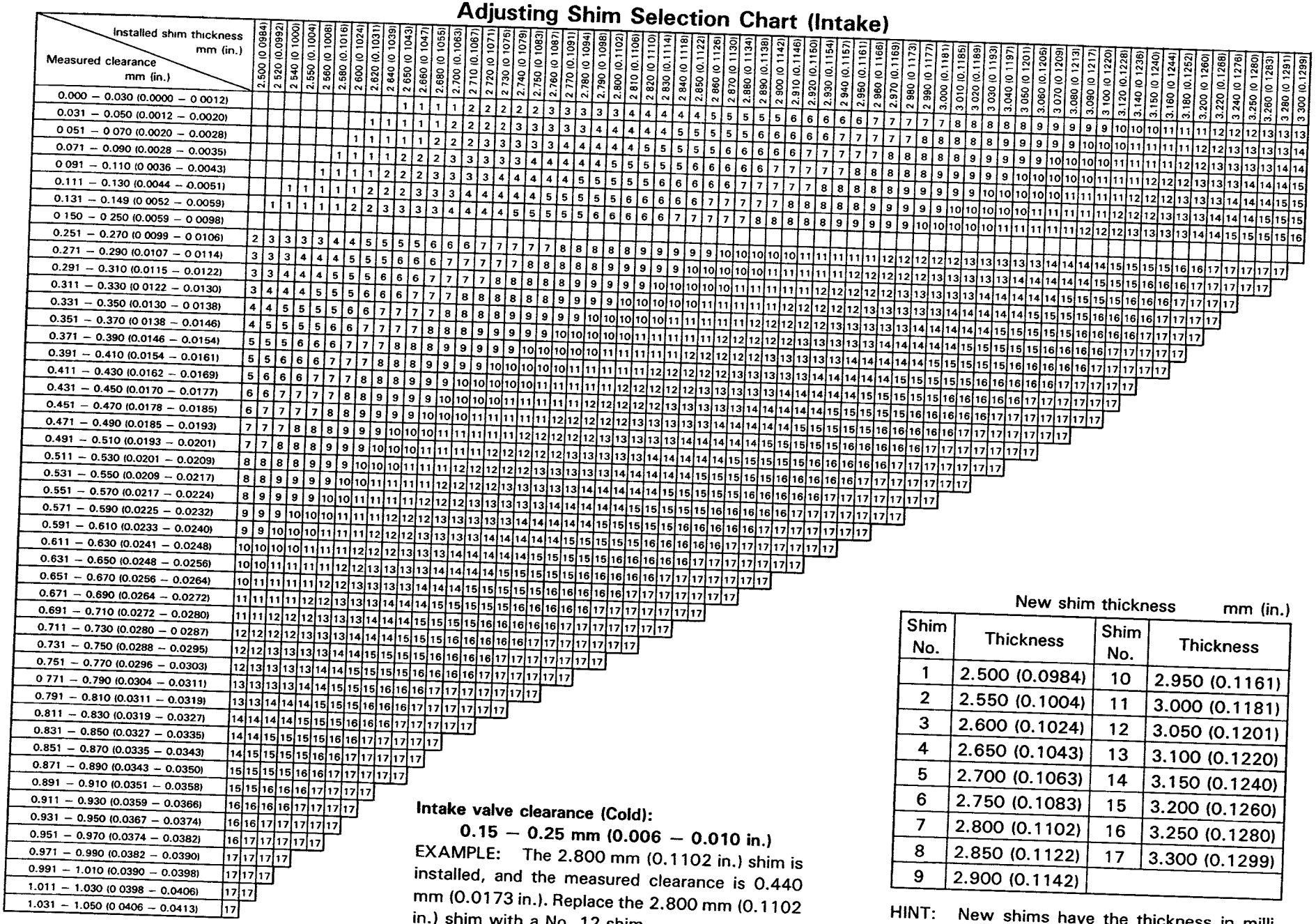

V00831

Intake valve clearance (Cold):

0.15 – 0.25 mm (0.006 – 0.010 in.)

EXAMPLE: The 2.800 mm (0.1102 in.) shim is installed, and the measured clearance is 0.440 mm (0.0173 in.). Replace the 2.800 mm (0.1102 in.) shim with a No. 12 shim.

New shim thickness mm (in.)

Shim No.	Thickness	Shim No.	Thickness
1	2.500 (0.0984)	10	2.950 (0.1161)
2	2.550 (0.1004)	11	3.000 (0.1181)
3	2.600 (0.1024)	12	3.050 (0.1201)
4	2.650 (0.1043)	13	3.100 (0.1220)
5	2.700 (0.1063)	14	3.150 (0.1240)
6	2.750 (0.1083)	15	3.200 (0.1260)
7	2.800 (0.1102)	16	3.250 (0.1280)
8	2.850 (0.1122)	17	3.300 (0.1299)
9	2.900 (0.1142)		

HINT: New shims have the thickness in millimeters imprinted on the face.

Adjusting Shim Selection Chart (Exhaust)

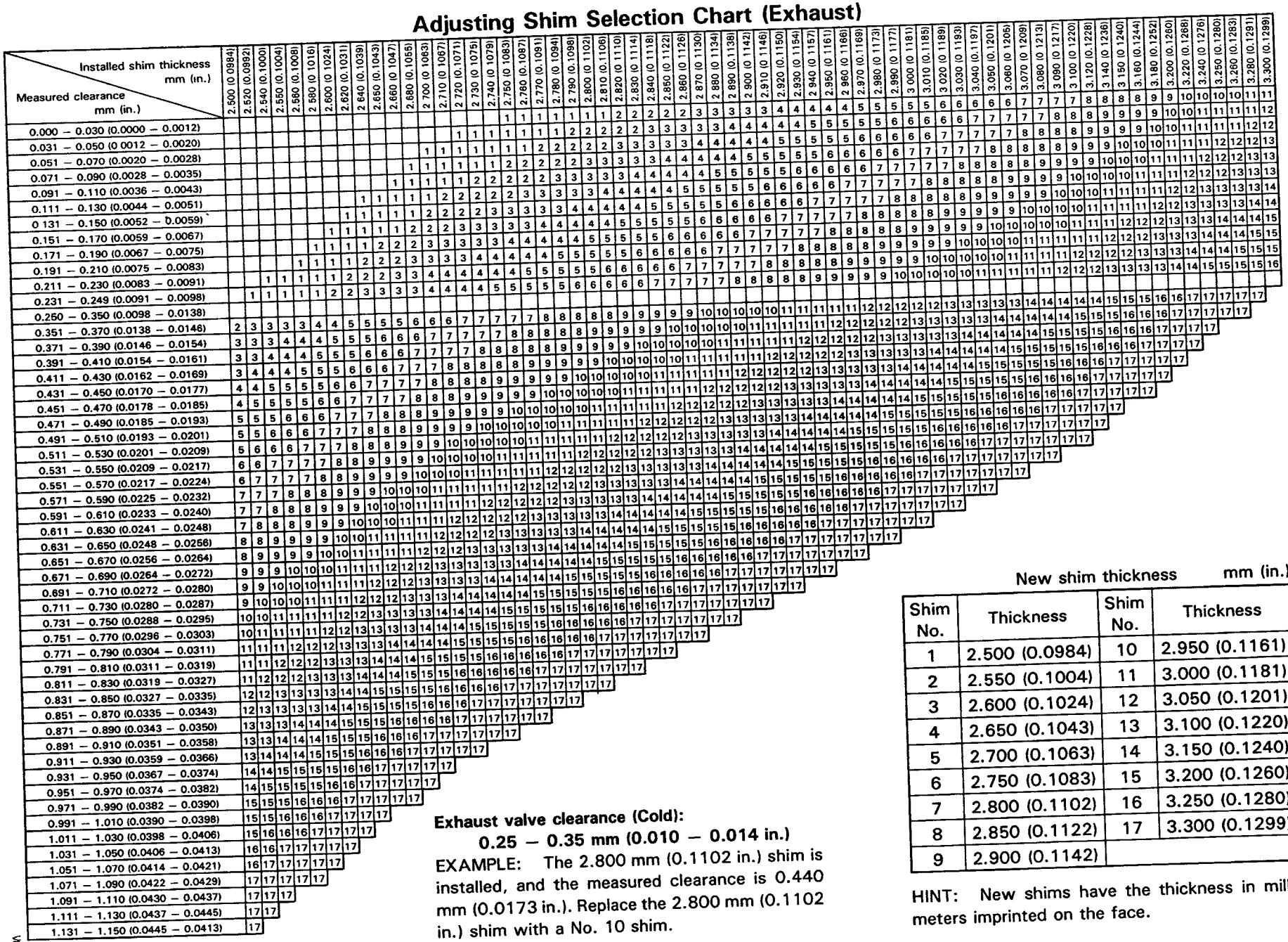

V00832

Exhaust valve clearance (Cold):

0.25 – 0.35 mm (0.010 – 0.014 in.)

EXAMPLE: The 2.800 mm (0.1102 in.) shim is installed, and the measured clearance is 0.440 mm (0.0173 in.). Replace the 2.800 mm (0.1102 in.) shim with a No. 10 shim.

New shim thickness mm (in.)

Shim No.	Thickness	Shim No.	Thickness
1	2.500 (0.0984)	10	2.950 (0.1161)
2	2.550 (0.1004)	11	3.000 (0.1181)
3	2.600 (0.1024)	12	3.050 (0.1201)
4	2.650 (0.1043)	13	3.100 (0.1220)
5	2.700 (0.1063)	14	3.150 (0.1240)
6	2.750 (0.1083)	15	3.200 (0.1260)
7	2.800 (0.1102)	16	3.250 (0.1280)
8	2.850 (0.1122)	17	3.300 (0.1299)
9	2.900 (0.1142)		

HINT: New shims have the thickness in millimeters imprinted on the face.

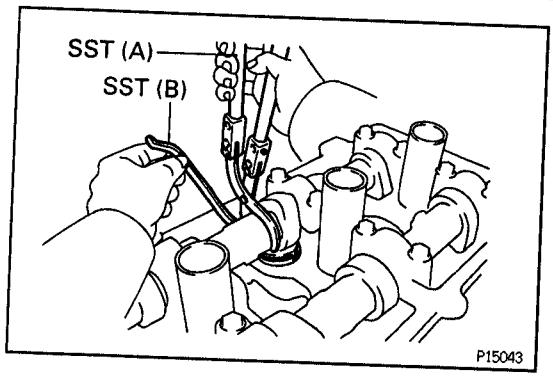

(c) Install a new adjusting shim.
- Place a new adjusting shim on the valve lifter.
- Using SST (A), press down the valve lifter and remove SST (B).

SST 09248–55040 (09248–05410, 09248–05420)

(d) Recheck the valve clearance.

9. REINSTALL CYLINDER HEAD COVER

10. RECONNECT ENGINE WIRE

11. REINSTALL HIGH–TENSION CORDS TO SPARK PLUGS

12. REINSTALL PCV HOSES

13. REINSTALL INTAKE AIR CONNECTOR

(See steps 34 to 36 in cylinder head installation)

EG

IGNITION TIMING INSPECTION

1. WARM UP ENGINE EGSME–02

Allow the engine to warm up to normal operating temperature.

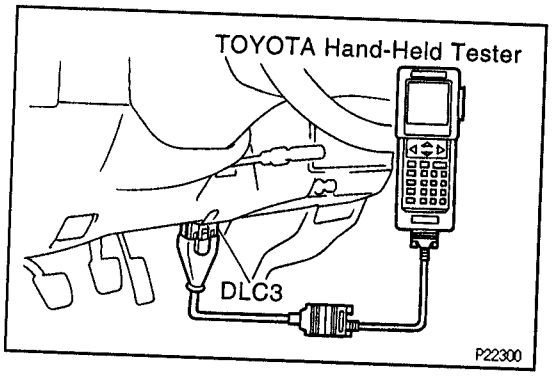

2. CONNECT TOYOTA HAND–HELD TESTER OR OBD II SCAN TOOL

(a) Connect the TOYOTA hand–held tester or OBD II scan tool to the DLC3.

(b) Please refer to the TOYOTA hand–held tester or OBD II scan tool operators manual for further details.

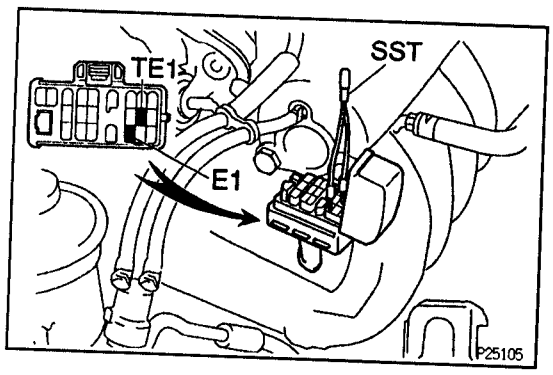

3. CHECK IGNITION TIMING

(a) Using SST, connect terminals TE1 and E1 of the DLC1.

SST 09843–18020

HINT: After engine speed is kept at about 1,000 rpm for 5 seconds, check that it returns to idle speed.

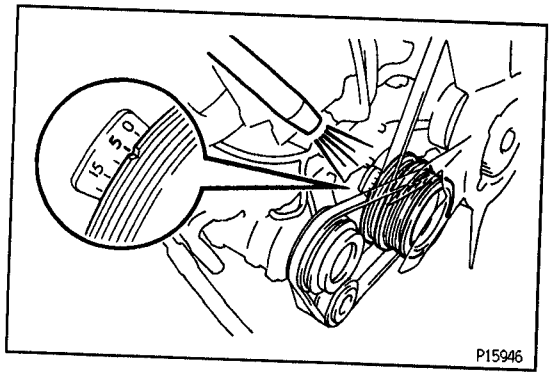

(b) Using a timing light, connect the test probe to the No.1 high–tension cord.

(c) Check ignition timing.

Ignition timing:

3 – 7° BTDC @ idle

(d) Remove the SST from the DLC1.

SST 09843–18020

4. **FURTHER CHECK IGNITION TIMING**

Ignition timing:

7 – 18° BTDC @ idle

HINT: The timing mark moves in a range between 7° and 18°.

5. **DISCONNECT TOYOTA HAND–HELD TESTER OR OBD II SCAN TOOL, AND TIMING LIGHT**

EG

IDLE SPEED INSPECTION

EG64E–01

1. **INITIAL CONDITIONS**

(a) Engine at normal operating temperature
(b) Air cleaner installed
(c) All pipes and hoses of air induction system connected
(d) All accessories switched OFF
(e) All vacuum lines properly connected
HINT: All vacuum hoses for EGR system, etc. should be properly connected.
(f) MFI system wiring connectors fully plugged
(g) Ignition timing check correctly
(h) Transmission in neutral position

2. **CONNECT TOYOTA HAND–HELD TESTER OR OBD II SCAN TOOL**

(See step 2 in ignition timing inspection)

3. **INSPECT IDLE SPEED**

(a) Race the engine speed at 2,500 rpm for approx. 90 seconds.
(b) Check the idle speed.

Idle speed:

650 – 750 rpm

If the idle speed is not as specified, check the IAC valve, intake air leakage and MFI system.

4. **DISCONNECT TOYOTA HAND–HELD TESTER OR OBD II SCAN TOOL**

CYLINDER HEAD

COMPONENTS FOR REMOVAL AND INSTALLATION

EGSMG–02

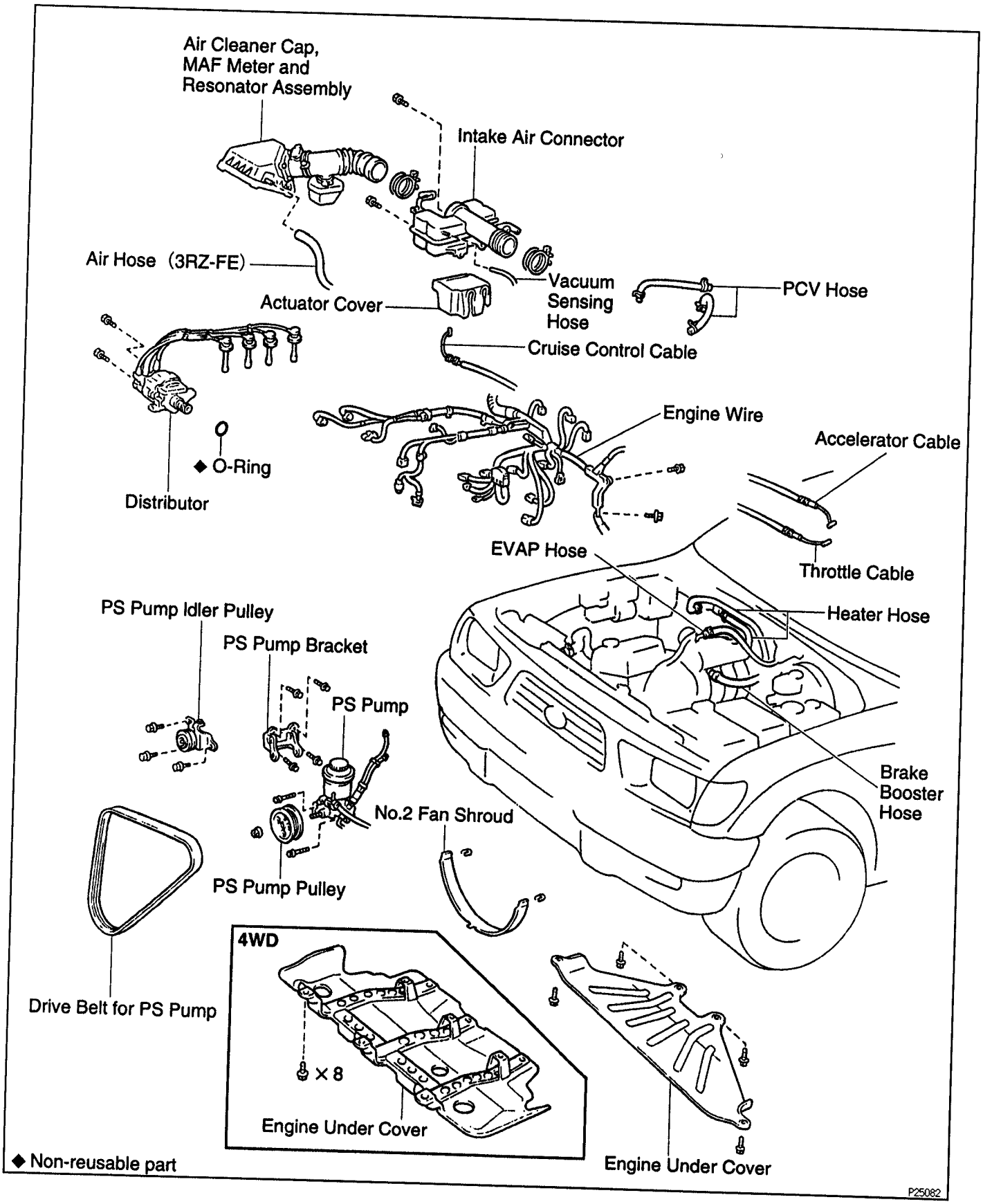

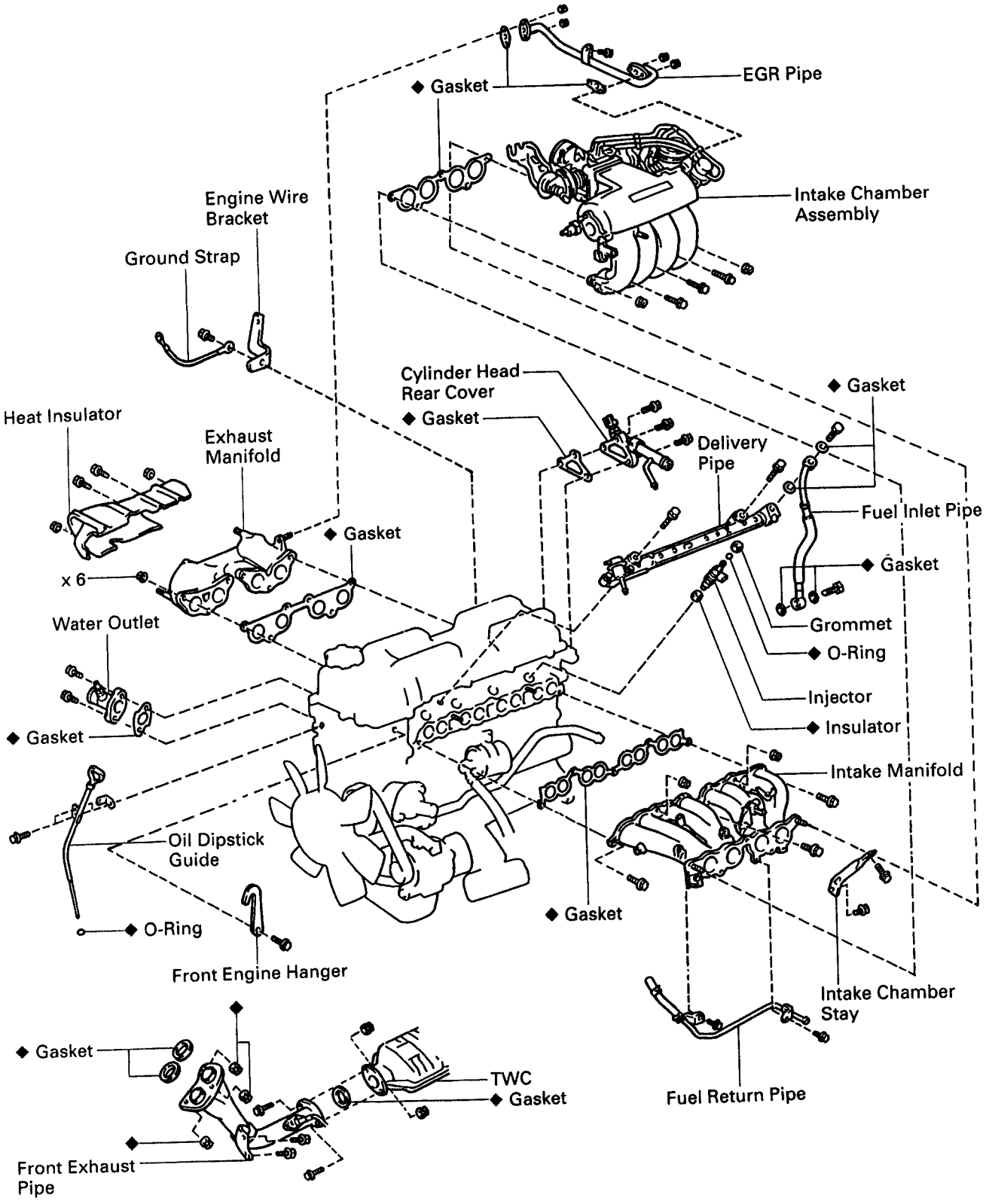

◆ Non-reusable part

P22337

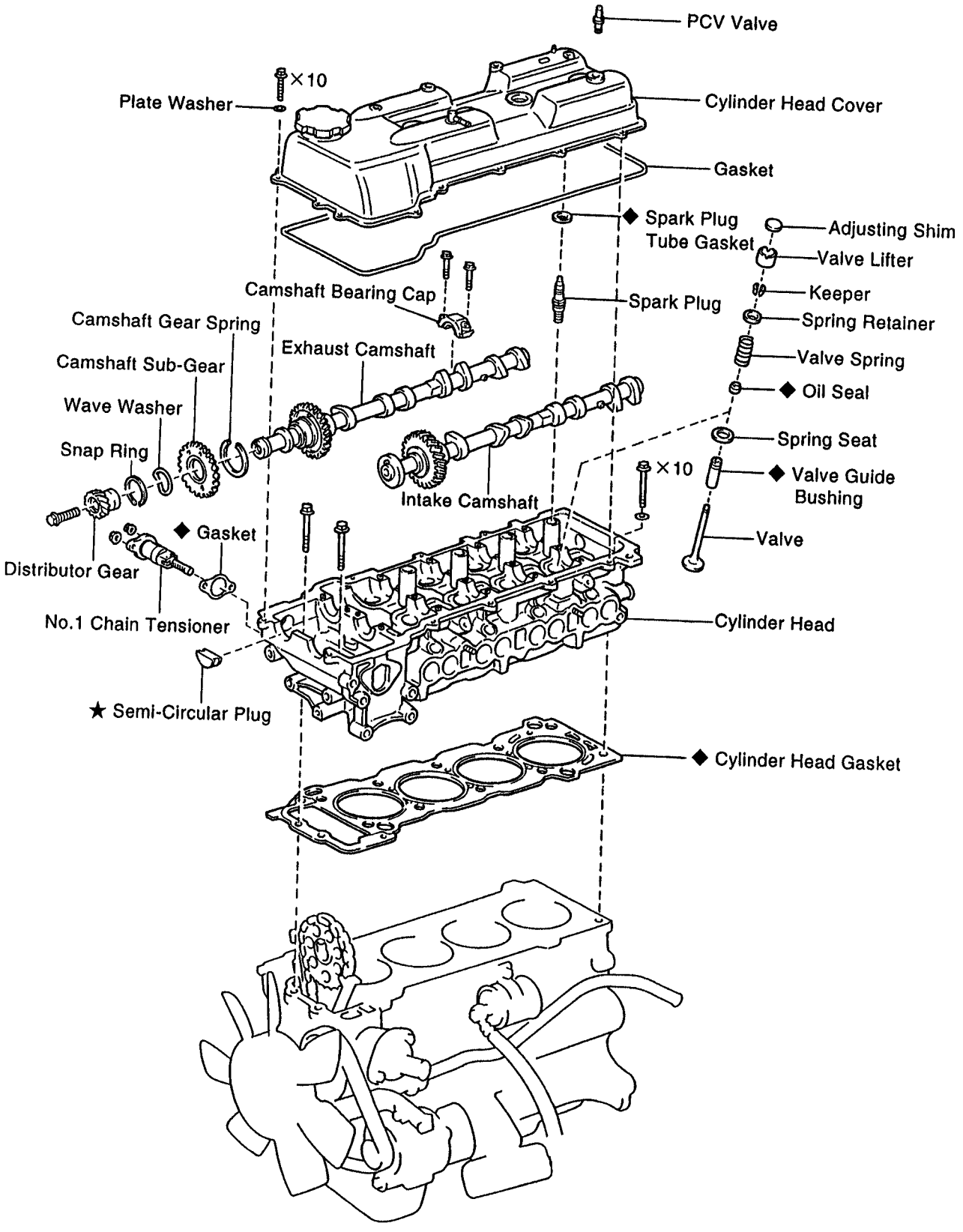

◆ Non-reusable part
★ Precoated part

P22292

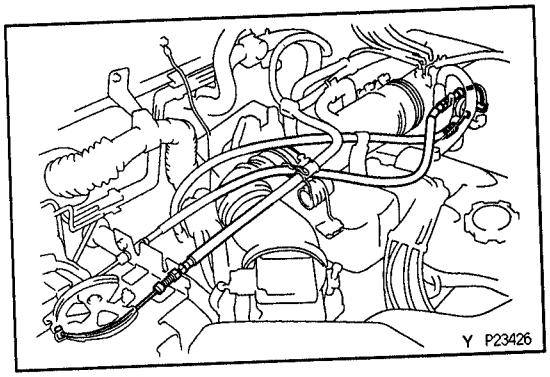

CYLINDER HEAD REMOVAL

1. DRAIN ENGINE COOLANT

2. DISCONNECT THESE CABLES:

(a) M/T:
Disconnect the accelerator cable from the throttle body.

(b) A/T:
Disconnect the accelerator and throttle cables from the throttle body.

(c) w/ Cruise Control System:
Remove the actuator cover, and disconnect the cruise control cable from the actuator.

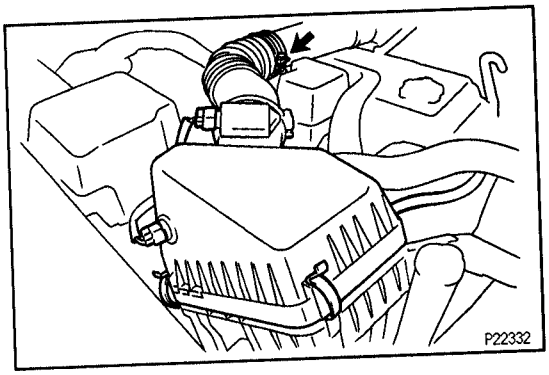

3. REMOVE AIR CLEANER CAP, MAF METER AND RESONATOR ASSEMBLY

(a) Disconnect the 3 wire clamps for the engine wire.

(b) Disconnect the MAF meter and IAT sensor connectors.

(c) 3RZ–FE:
Disconnect the air hose from the air cleaner cap.

(d) Loosen the air cleaner hose clamp.

(e) Loosen the 4 clips, and remove the air cleaner cap, MAF meter and resonator assembly.

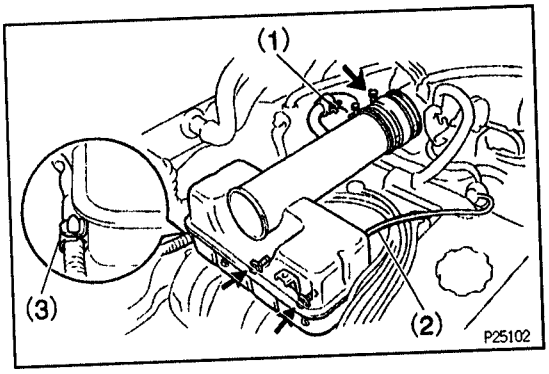

4. REMOVE INTAKE AIR CONNECTOR

(a) Disconnect these hoses and clamp:
(1) Air hose for IAC
(2) Vacuum sensing hose
(3) Wire clamp for engine wire

(b) Loosen the hose clamp, and remove the 2 bolts and intake air connector.

5. REMOVE OIL DIPSTICK GUIDE

(a) Remove the bolt, dipstick guide and engine wire bracket.

(b) Remove the O–ring from the dipstick guide.

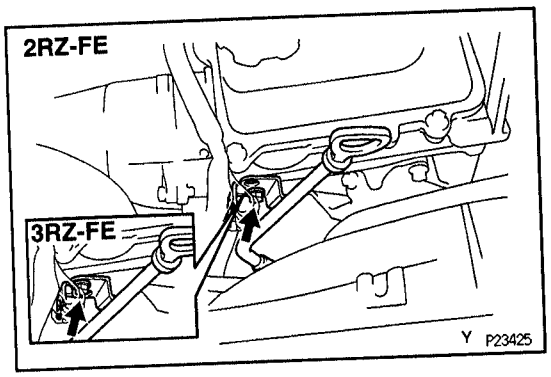

6. w/ PS:
REMOVE DRIVE BELT FOR PS PUMP
Loosen the lock bolt and adjusting bolt, and remove the drive belt.

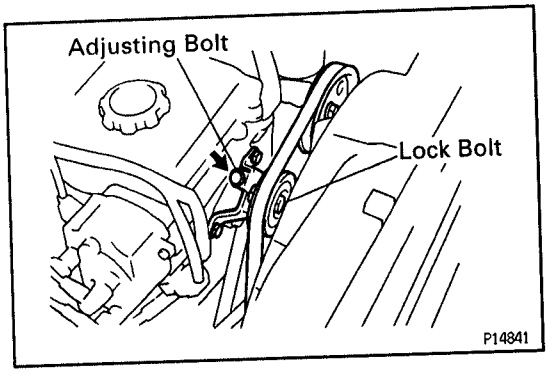

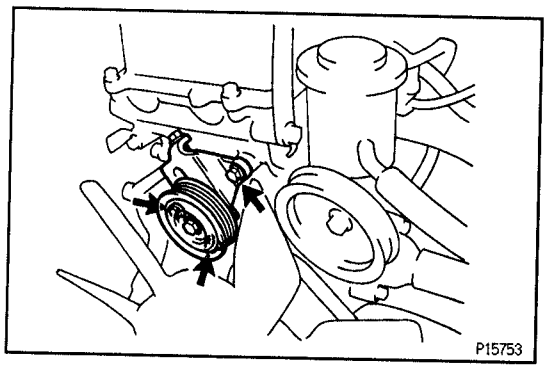

7. w/ PS:
REMOVE DRIVE BELT IDLER PULLEY FOR PS PUMP
Remove the 3 bolts and idler pulley.

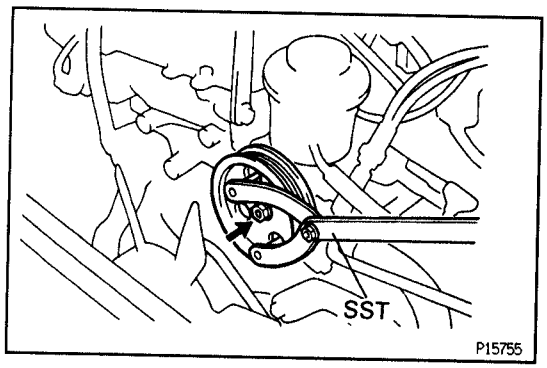

8. w/ PS:
REMOVE PS PUMP AND BRACKET
(a) Using SST, remove the nut and PS pump pulley.
SST 09960–10010 (09962–01000, 09963–01000)

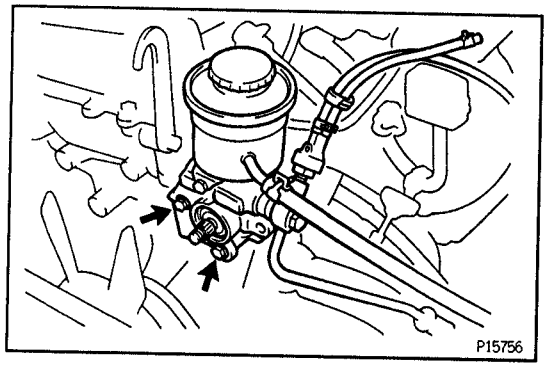

(b) Disconnect the 2 air hoses from the throttle body and air intake chamber.
(c) Remove the 2 bolts, and disconnect the PS pump.
HINT: Put aside the pump and suspend it.

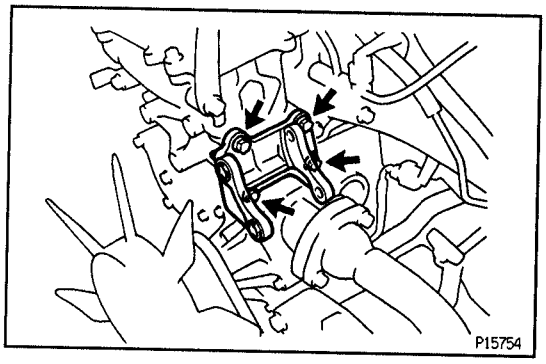

(d) Remove the 4 bolts and PS pump bracket.

9. REMOVE PCV HOSES

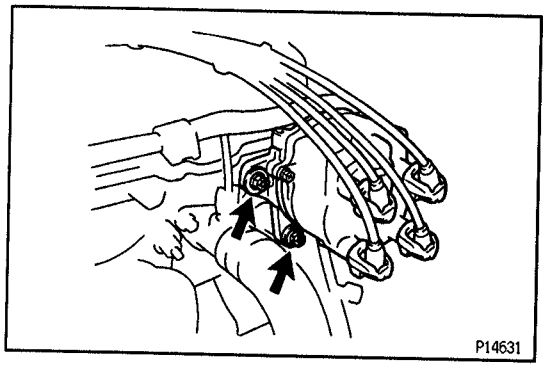

10. REMOVE DISTRIBUTOR
(a) Disconnect high–tension cords at the rubber boot from the cylinder head.
NOTICE: Pulling on or bending the cords may damage the conductor inside.
(b) Disconnect the distributor connector.
(c) Remove the hold–down bolts and distributor.
(d) Remove the O–ring.

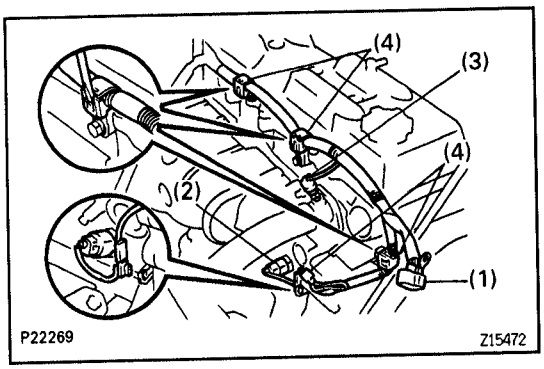

11. DISCONNECT ENGINE WIRE

(a) Disconnect these connectors and clamps:
  (1) w/ A/C:
    A/C compressor connector
  (2) Oil pressure sensor connector and clamp
  (3) Engine coolant temperature sender gauge connector
  (4) 4 engine wire clamps and engine wire

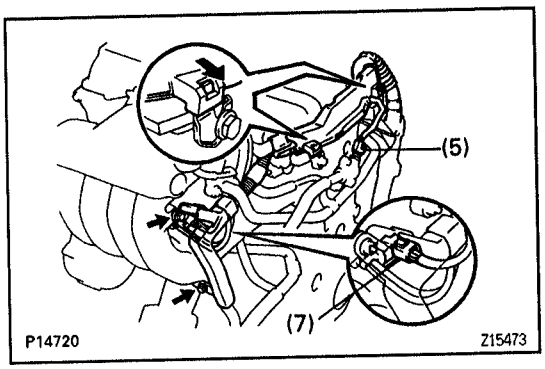

  (5) ECT sensor connector
  (6) EGR gas temperature sensor connector
  (7) VSV connector for EGR

(b) Disconnect the 2 vacuum hose from the VSV for EGR and clamp.

(c) Disconnect the bolt and ground strap from the cowl top panel.

(d) Remove the 2 bolts, and disconnect the engine wire from air the intake chamber.

(e) Disconnect the 2 engine wire clamps and engine wire.

(f) Disconnect these connectors:
  (1) Throttle position sensor connector
  (2) IAC valve connector

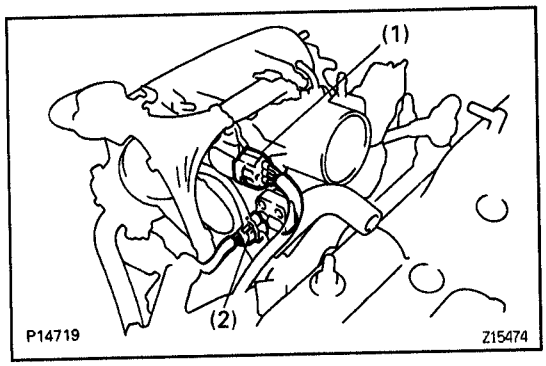

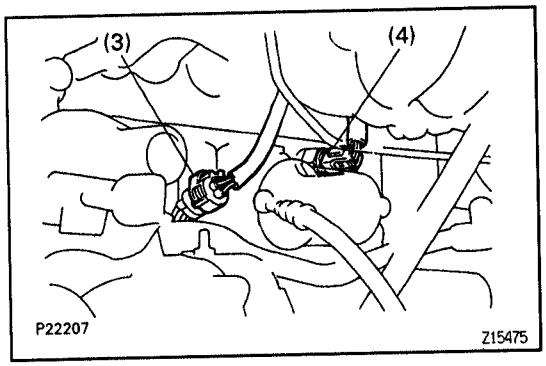

  (3) Crankshaft position sensor connector
  (4) Knock sensor connector

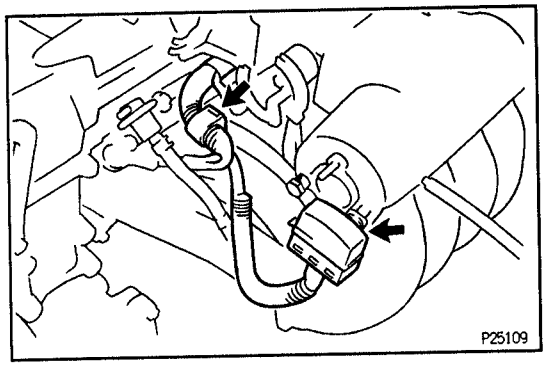

(g) Disconnect the DLC1 from the bracket.

(h) Disconnect the engine wire clamp.

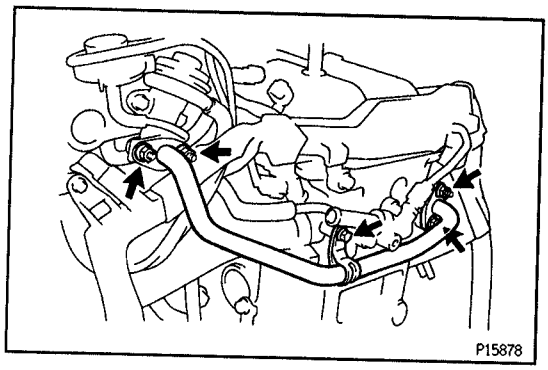

12. REMOVE EGR PIPE

Remove the 4 nuts, bolt, EGR pipe and 2 gasket.

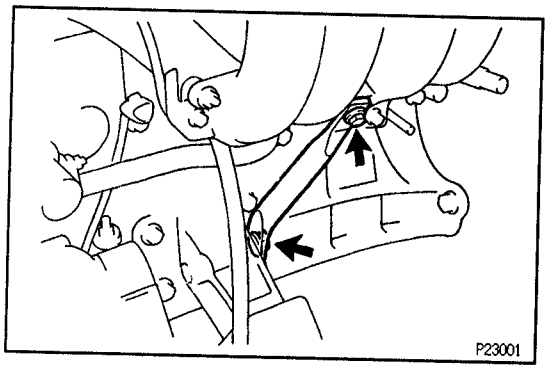

13. REMOVE INTAKE CHAMBER STAY

Remove the 2 bolts and intake chamber stay.

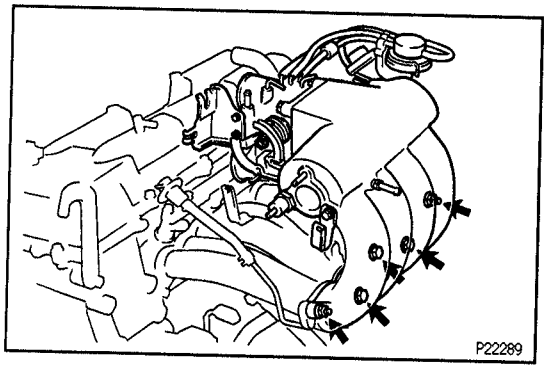

14. REMOVE AIR INTAKE CHAMBER ASSEMBLY

(a) Disconnect these hoses:
- EVAP hose from throttle body
- Brake booster vacuum hose from union
- Water bypass hose from water bypass pipe
- Water bypass hose from cylinder head rear cover

(b) Remove the 3 bolts, 2 nuts, air intake chamber assembly and gasket.

15. DISCONNECT INJECTOR CONNECTORS

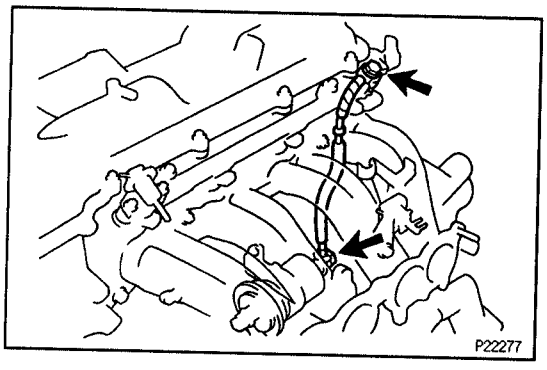

16. REMOVE FUEL INLET PIPE

Remove the 2 union bolts, 4 gaskets and fuel inlet pipe.

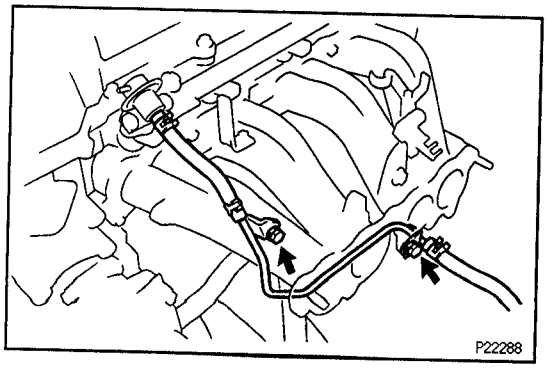

17. REMOVE FUEL RETURN PIPE

(a) Disconnect these hoses:
- Fuel return hose from fuel pressure regulator
- Fuel return hose from fuel return pipe

(b) Remove the 2 bolts and fuel return pipe.

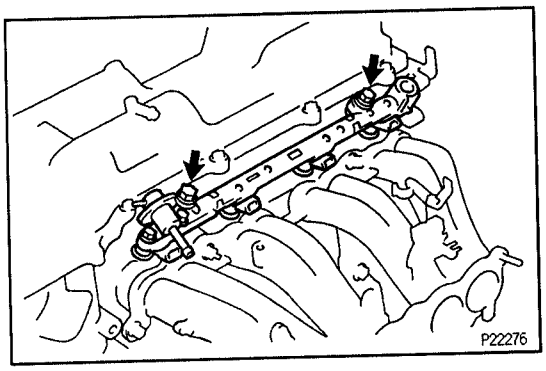

18. REMOVE DELIVERY PIPE AND INJECTORS

(a) Remove the 2 bolts and delivery pipe together with the 4 injectors.

NOTICE: Be careful not to drop the injectors when removing the delivery pipe.

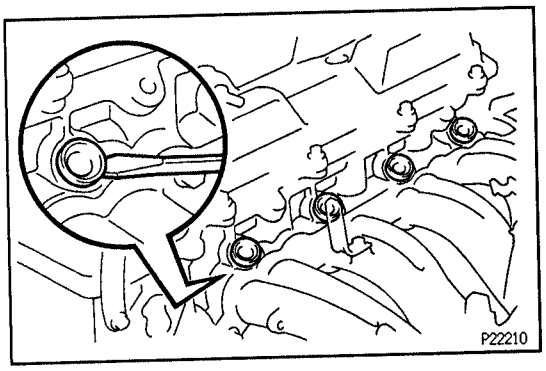

(b) Remove the 4 insulators from the 4 spacers.
(c) Pull out the 4 injectors from the delivery pipe.
(d) Remove the O–ring and grommet from each injector.
(e) Using a screwdriver, pry out the 4 spacers.

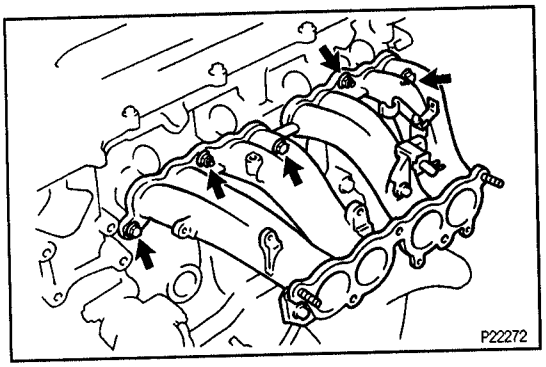

19. REMOVE INTAKE MANIFOLD

Remove the 3 bolts, 2 nuts, intake manifold and gasket.

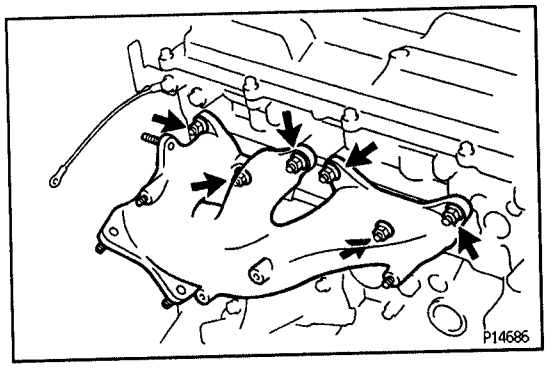

20. REMOVE FRONT EXHAUST PIPE

(See engine removal in cylinder block)

21. REMOVE EXHAUST MANIFOLD

(a) Remove the 2 bolts, 2 nuts and heat insulator.
(b) Remove the 6 nuts, exhaust manifold and gasket.

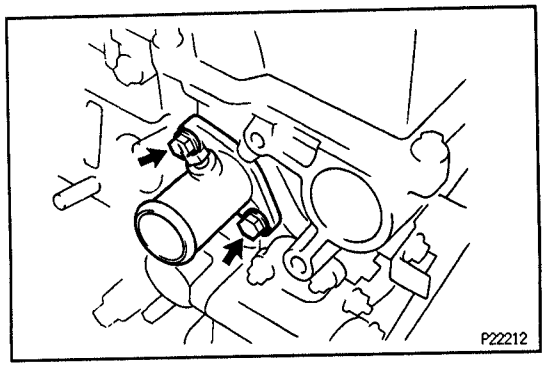

22. REMOVE WATER OUTLET

(a) Disconnect the upper radiator hose.
(b) Remove the 2 bolts, water outlet and gasket.

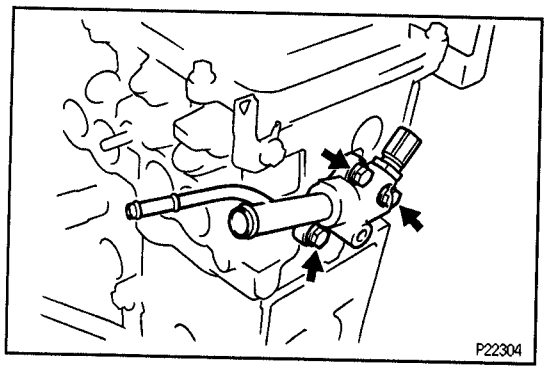

23. REMOVE CYLINDER HEAD REAR COVER

Remove the 3 bolts, cylinder head rear cover and gasket.

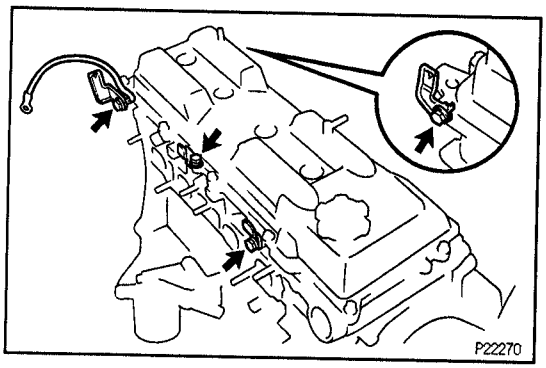

24. REMOVE SPARK PLUGS

25. REMOVE FRONT ENGINE HANGER

26. REMOVE ENGINE WIRE BRACKETS

Remove the 4 bolts, 4 wire brackets and ground strap.

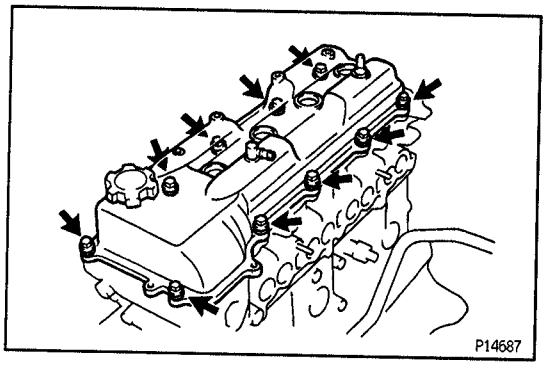

27. REMOVE CYLINDER HEAD COVER

Remove the 10 bolts, seal washers, cylinder head cover and gasket.

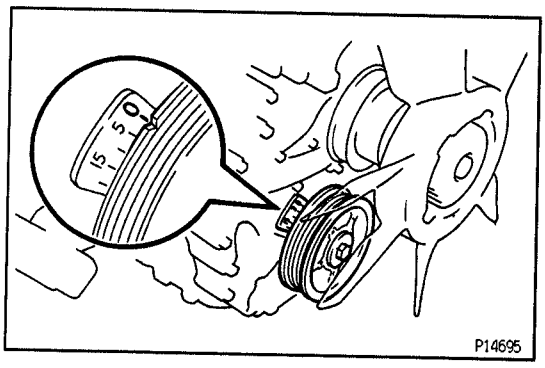

28. SET NO.1 CYLINDER TO TDC/COMPRESSION

(a) Turn the crankshaft pulley clockwise and align its groove with the "0" mark on the timing chain cover.

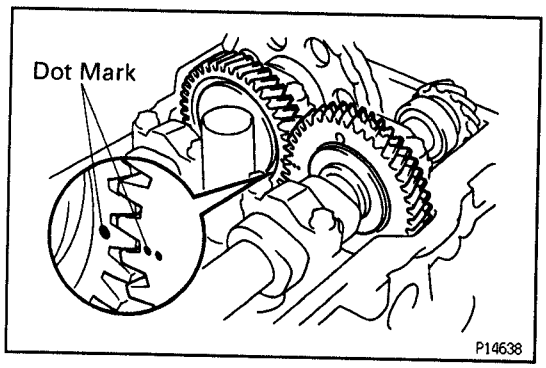

(b) Check that the timing marks (1 and 2 dots) of the camshaft drive and driven gears are in straight line on the cylinder head surface as shown in the illustration. If not, turn the crankshaft 1 revolution (360°) and align the marks as above.

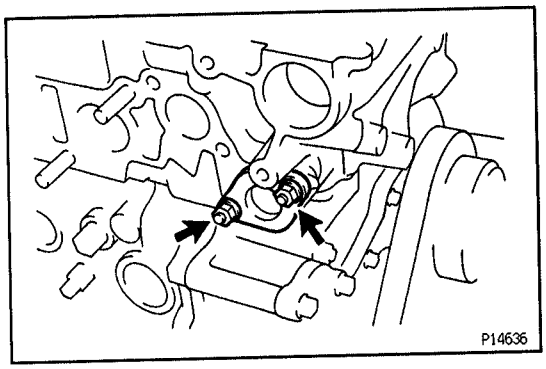

29. REMOVE CHAIN TENSIONER

Remove the 2 nuts, chain tensioner and gasket.

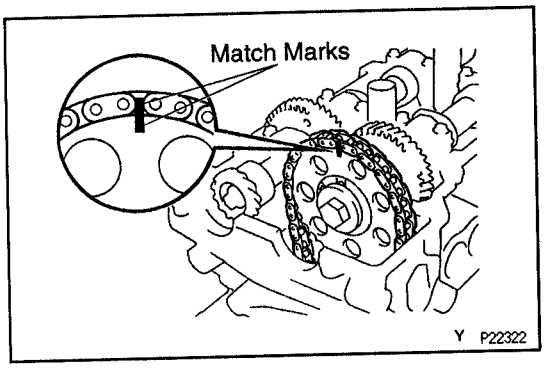

30. REMOVE SEMI–CIRCULAR PLUGS

31. REMOVE CAMSHAFT TIMING GEAR

(a) Place the matchmarks on the camshaft timing gear and No.1 timing chain.

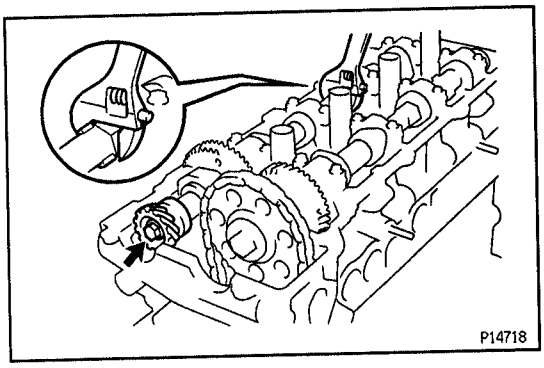

(b) Hold the exhaust camshaft with a wrench, remove the bolt and distributor gear.

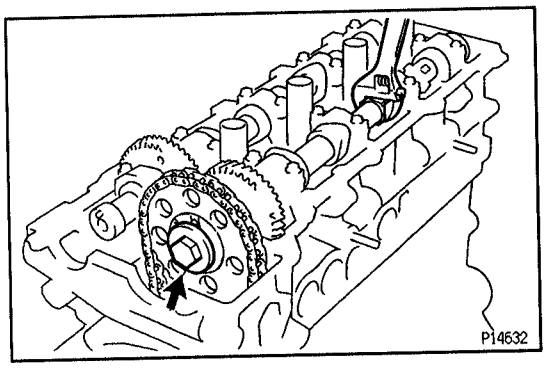

(c) Hold the intake camshaft with a wrench and remove the bolt.

(d) Remove the camshaft timing gear and chain from the intake camshaft and leave on the slipper and damper.

32. REMOVE CAMSHAFTS

NOTICE: Since the thrust clearance of the camshaft is small, the camshaft must be kept level while it is being removed. If the camshaft is not kept level, the portion of the cylinder head receiving the shaft thrust may crack or be damaged, causing the camshaft to seize or break. To avoid this, these steps should be carried out.

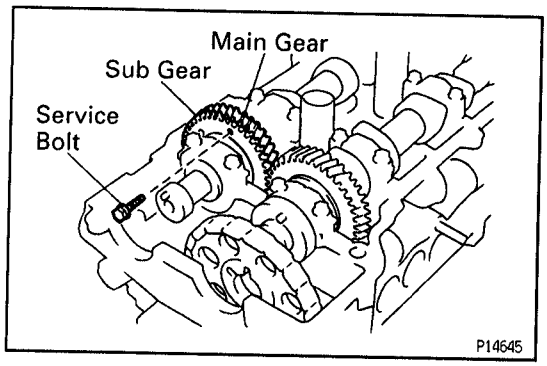

A. Remove exhaust camshaft

(a) Bring the service bolt hole of the driven sub–gear upward by turning the hexagon wrench head portion of the exhaust camshaft with a wrench.

(b) Secure the exhaust camshaft sub–gear to the main gear with a service bolt.
Recommended service bolt:

Thread diameter	6 mm
Thread pitch	1.0 mm
Bolt length	16 – 20 mm (0.63 – 0.79 in.)

HINT: When removing the camshaft, make sure that the torsional spring force of the sub–gear has been eliminated by the above operation.

(c) Uniformly loosen and remove the 10 bearing cap bolts, in several passes, in the sequence shown.

(d) Remove the 5 bearing caps and camshaft.

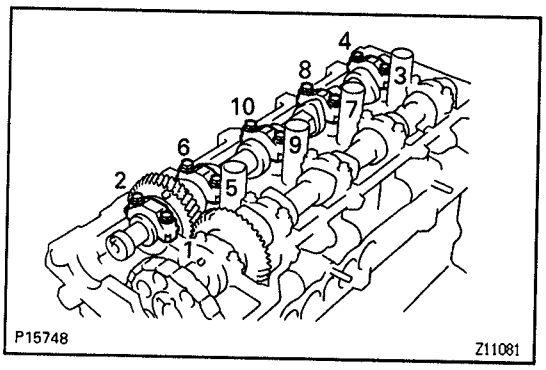

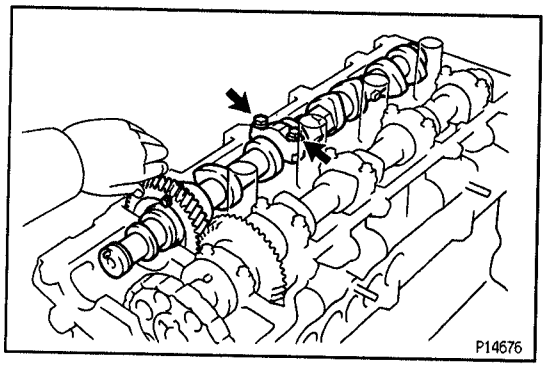

HINT: If the camshaft is not being lifted out straight and level, reinstall the No.3 bearing cap with the 2 bolts. Then alternately loosen and remove the bearing cap bolts with the camshaft gear pulled up.

NOTICE: Do not pry on or attempt to force the camshaft with a tool or other object.

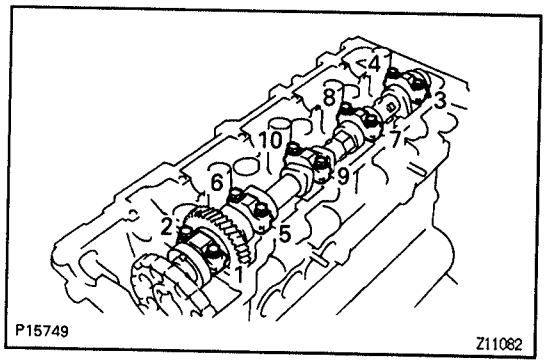

B. Remove intake camshaft

(a) Uniformly loosen and remove the 10 bearing cap bolts, in several passes, in the sequence shown.

(b) Remove the 5 bearing caps and camshaft.

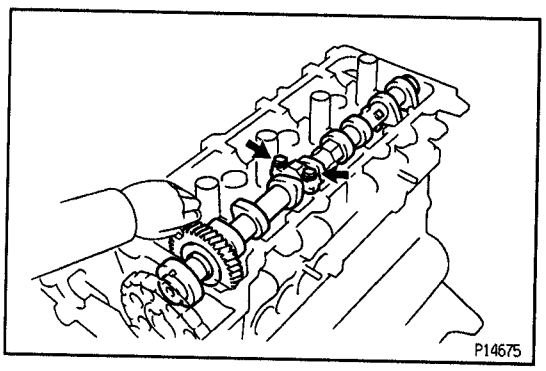

HINT: If the camshaft is not being lifted out straight and level, reinstall the No.3 bearing cap with the 2 bolts. Then alternately loosen and remove the 2 bearing cap bolts with the camshaft gear pulled up.

NOTICE: Do not pry on or attempt to force the camshaft with a tool or other object.

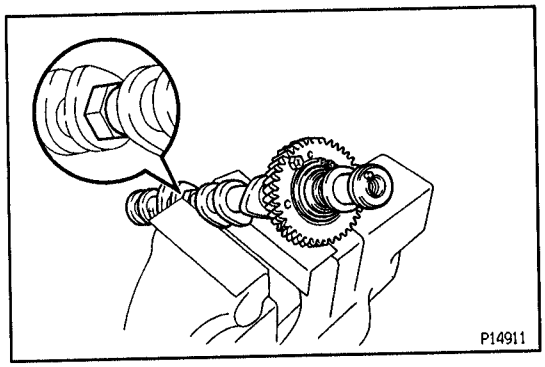

33. DISASSEMBLE EXHAUST CAMSHAFT

(a) Mount the hexagon wrench head portion of the camshaft in a vise.

NOTICE: Be careful not to damage the camshaft.

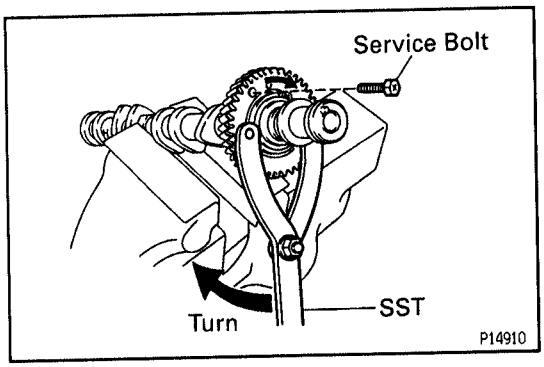

(b) Using SST, turn the sub–gear clockwise, and remove the service bolt.
SST 09960–10010 (09962–01000, 09963–00500)

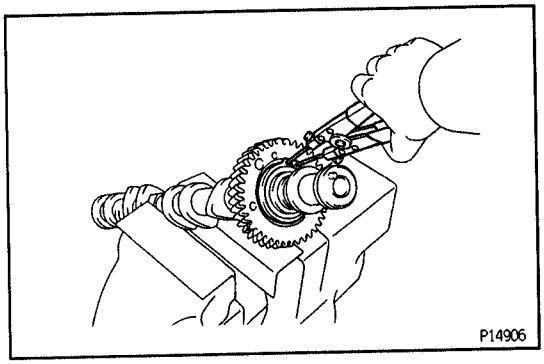

(c) Using snap ring pliers, remove the snap ring.
(d) Remove these parts:
- Wave washer
- Camshaft sub–gear
- Camshaft gear spring

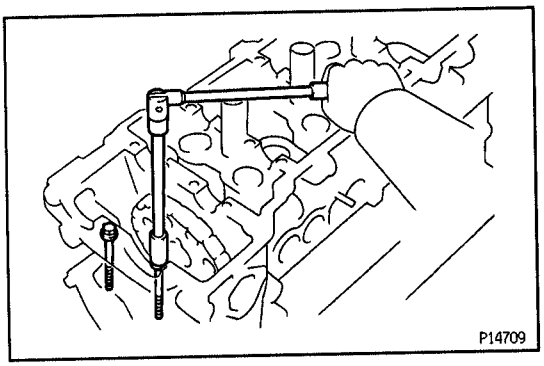

34. REMOVE CYLINDER HEAD

(a) Remove the 2 bolts in front of the head before the other head bolts are removed.

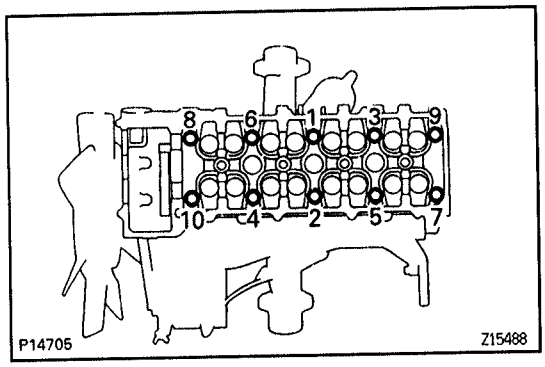

(b) Uniformly loosen and remove the 10 cylinder head bolts, in several passes, in the sequence shown.

NOTICE: Cylinder head warpage or cracking could result from removing bolts in incorrect order.

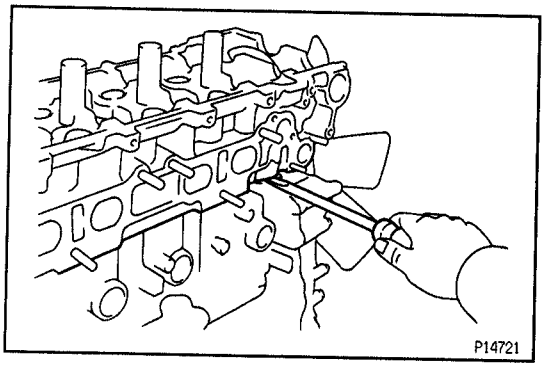

(c) Lift the cylinder head from the dowels on the cylinder block, and place the cylinder head on wooden blocks on a bench.
HINT: If the cylinder head is difficult to lift off, pry between the cylinder head and cylinder block with a screwdriver.
NOTICE: Be careful not to damage the contact surfaces of the cylinder head and cylinder block.

CYLINDER HEAD DISASSEMBLY

EG5C1–03

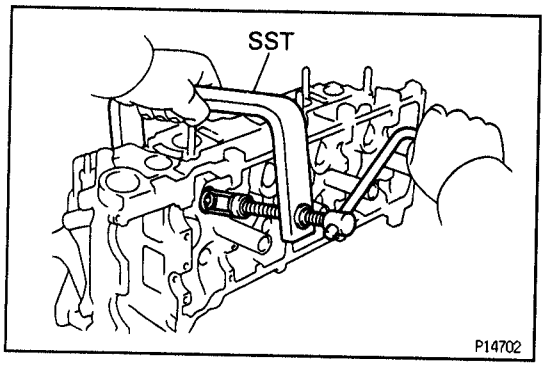

1. REMOVE VALVE LIFTERS AND SHIMS

HINT: Arrange the valve lifters and shims in correct order.

2. REMOVE VALVES

(a) Using SST, compress the valve spring and remove the 2 keepers.
SST 09202–70020 (09202–00010)

(b) Remove the spring retainer, valve spring and valve.

(c) Using needle–nose pliers, remove the oil seal.

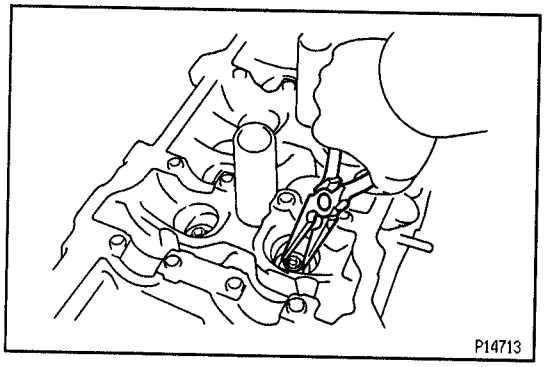

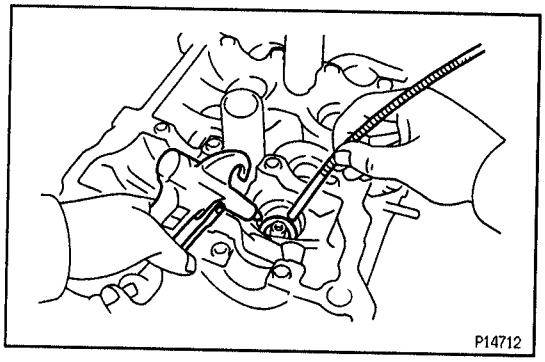

(d) Using compressed air and a magnetic finger, remove the spring seat by blowing air.
HINT: Arrange the valves, valve springs, spring seats and spring retainers in correct order.

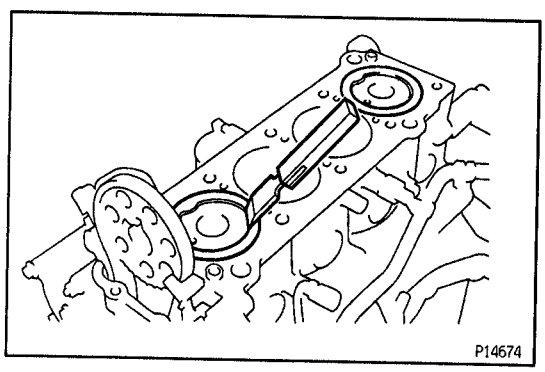

CYLINDER HEAD COMPONENTS, INSPECTION, CLEANING AND REPAIR

EG5C2–05

1. CLEAN TOP SURFACES OF PISTONS AND CYLINDER BLOCK

(a) Turn the crankshaft, and bring each piston to top dead center (TDC). Using a gasket scraper, remove all the carbon from the piston top surface.

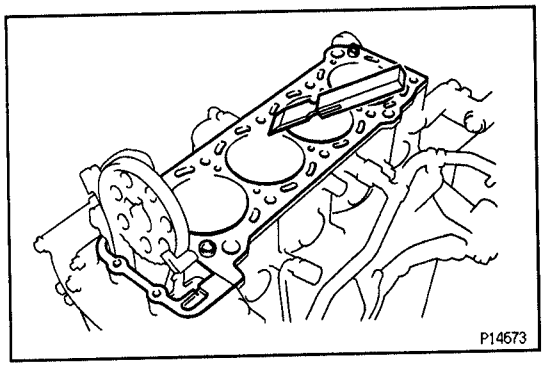

(b) Using a gasket scraper, remove all the gasket material from the cylinder block surface.

(c) Using compressed air, blow carbon and oil from the bolt holes.

CAUTION: Protect your eyes when using high–compressed air.

EG

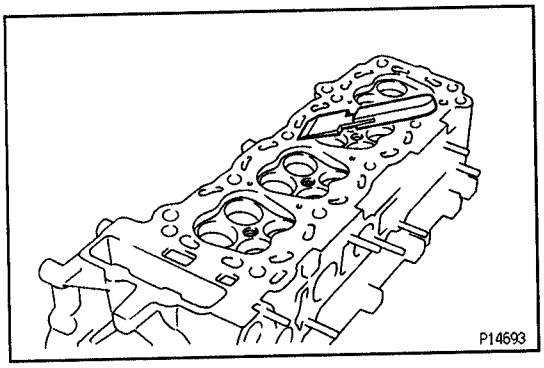

2. CLEAN CYLINDER HEAD

A. Remove gasket material

Using a gasket scraper, remove all the gasket material from the cylinder block contact surface.

NOTICE: Be careful not to scratch the cylinder block contact surface.

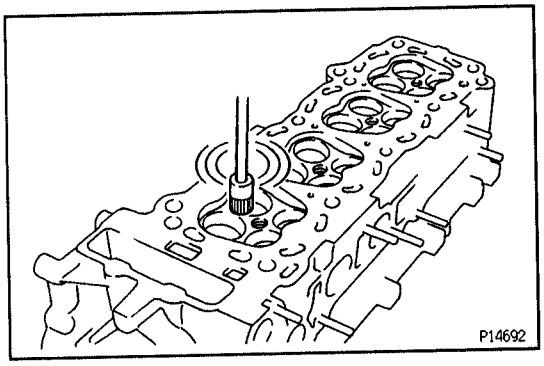

B. Clean combustion chambers

Using a wire brush, remove all the carbon from the combustion chambers.

NOTICE: Be careful not to scratch the cylinder block contact surface.

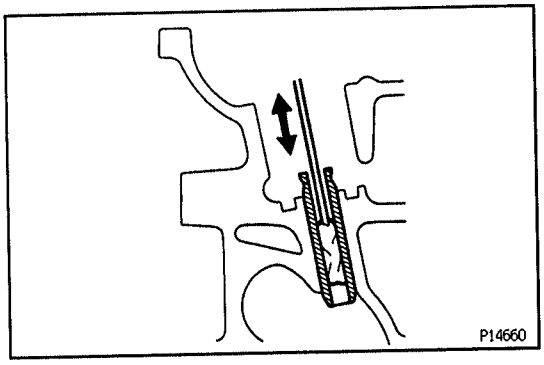

C. Clean valve guide bushings

Using a valve guide bushing brush and solvent, clean all the guide bushings.

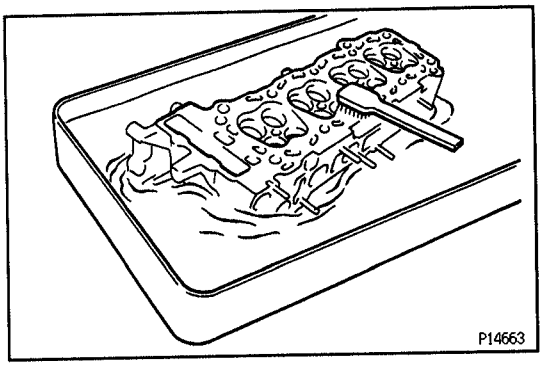

D. Clean cylinder head

Using a soft brush and solvent, thoroughly clean the cylinder head.

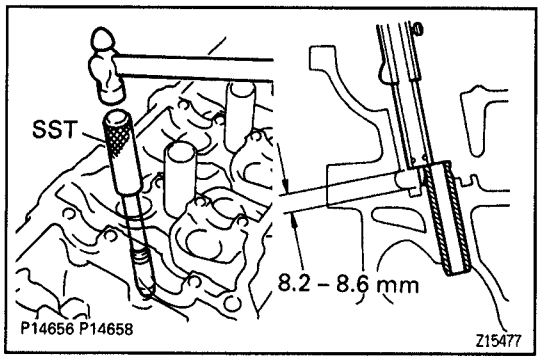

(e) Gradually heat the cylinder head to 80 – 100°C (176 – 212°F).

(f) Using SST and a hammer, tap in a new guide bushing to where there 8.2 – 8.6 mm (0.323 – 0.339 in.) protruding from the cylinder head.
SST 09201–10000 (09201–01060),
09950–70010 (09951–07150)

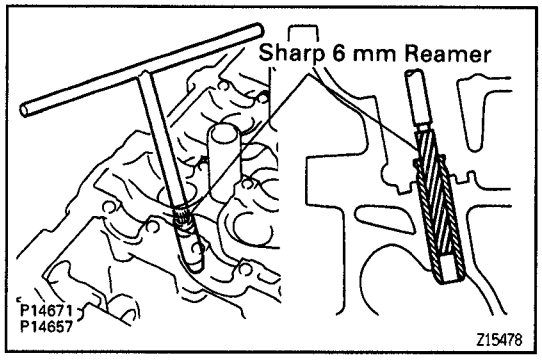

(g) Using a sharp 6 mm reamer, ream the guide bushing to obtain the standard specified clearance (See step 5 on the previous page) between the guide bushing and valve stem.

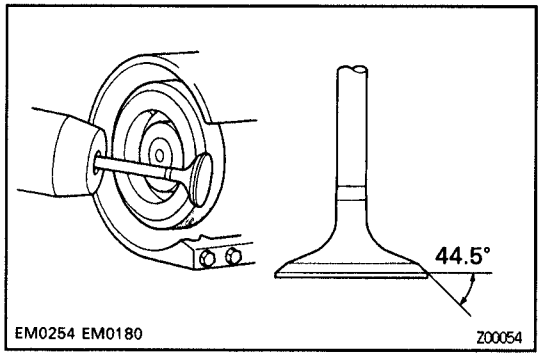

7. INSPECT AND GRIND VALVES

(a) Grind the valve enough to remove pits and carbon.

(b) Check that the valve is ground to the correct valve face angle.
Valve face angle:
44.5°

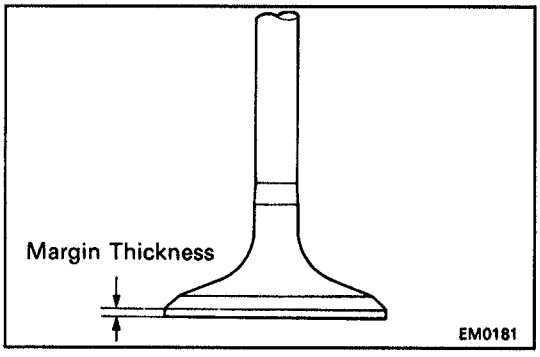

(c) Check the valve head margin thickness.
Standard margin thickness:
1.0 mm (0.039 in.)
Minimum margin thickness:
0.5 mm (0.020 in.)
If the margin thickness is less than minimum, replace the valve.

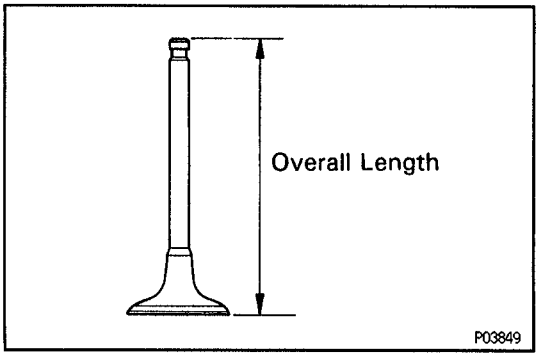

(d) Check the valve overall length.
Standard overall length:
Intake: 103.45 mm (4.0728 in.)
Exhaust: 103.60 mm (4.0787 in.)
Minimum overall length:
Intake: 102.95 mm (4.0531 in.)
Exhaust: 103.10 mm (4.0590 in.)
If the overall length is less than minimum, replace the valve.

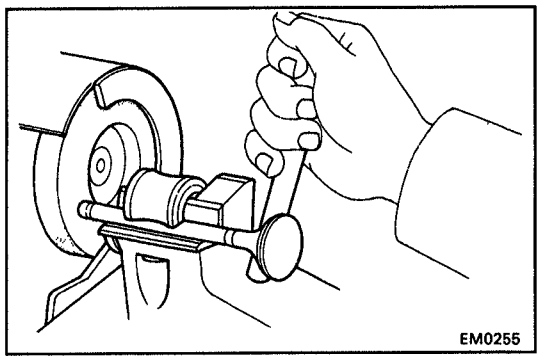

(e) Check the surface of the valve stem tip for wear.
If the valve stem tip is worn, resurface the tip with a grinder or replace the valve.
NOTICE: Do not grind off more than minimum.

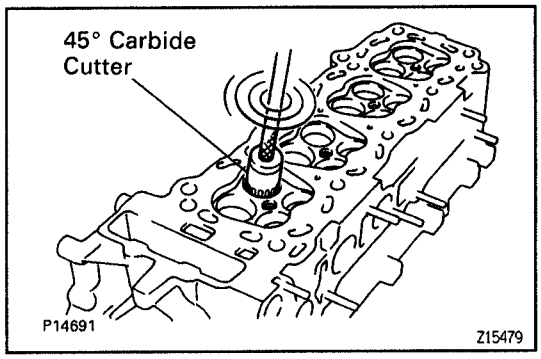

8. INSPECT AND CLEAN VALVE SEATS

(a) Using a 45° carbide cutter, resurface the valve seats. Remove only enough metal to clean the seats.

(b) Check the valve seating position.
Apply a light coat of prussian blue (or white lead) to the valve face. Lightly press the valve against the seat. Do not rotate valve.

(c) Check the valve face and seat for these:

- If blue appears 360° around the face, the valve is concentric. If not, replace the valve.
- If blue appears 360° around the valve seat, the guide and face are concentric. If not, resurface the seat.
- Check that the seat contact is in the middle of the valve face with these width:
1.0 – 1.4 mm (0.039 – 0.055 in.)

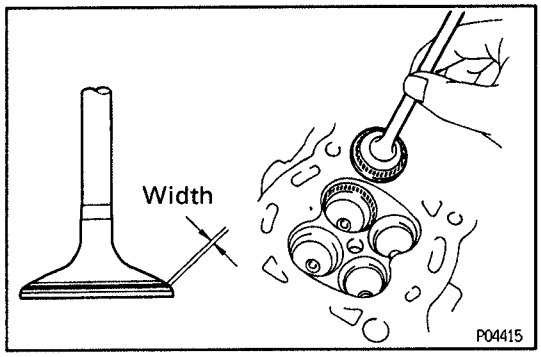

If not, correct the valve seats as follows:

(1) Intake:
If the seating is too high on the valve face, use 30° and 45° cutters to correct the seat.

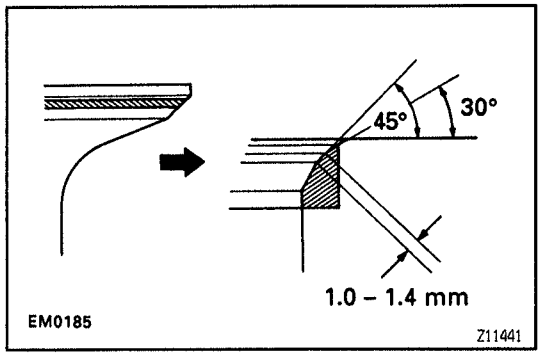

(2) If the seating is too low on the valve face, use 60° and 45° cutters to correct the seat.

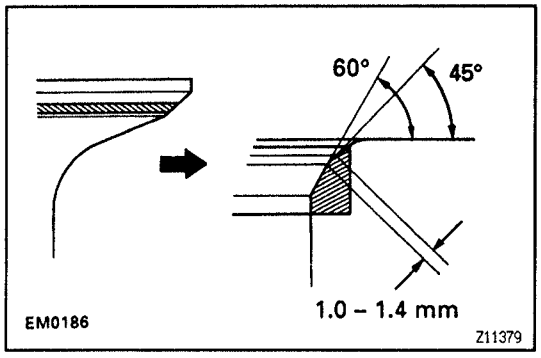

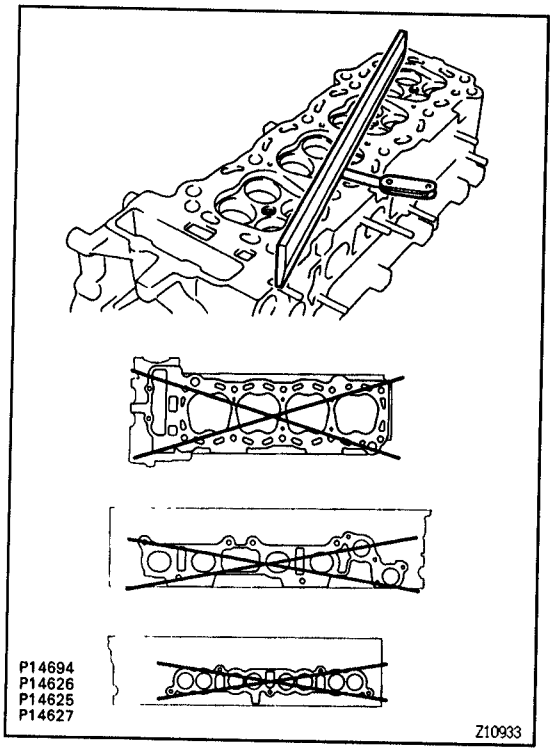

3. INSPECT CYLINDER HEAD

A. Inspect for flatness

Using a precision straight edge and thickness gauge, measure the surfaces contacting the cylinder block and the manifolds for warpage.

Maximum warpage:

Cylinder block side

0.05 mm (0.0020 in.)

Manifold side

0.10 mm (0.0039 in.)

If warpage is greater than maximum, replace the cylinder head.

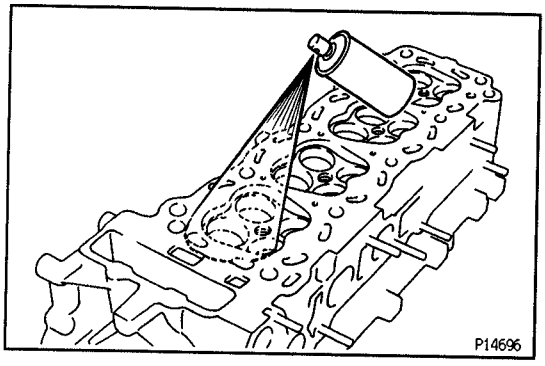

B. Inspect for cracks

Using a dye penetrant, check the combustion chambers, intake ports, exhaust ports and cylinder block surface for cracks.

If cracked, replace the cylinder head.

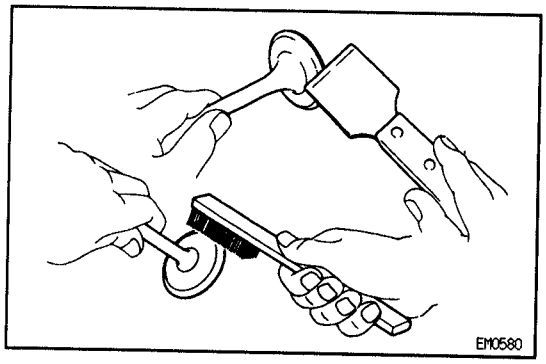

4. CLEAN VALVES

(a) Using a gasket scraper, chip off any carbon from the valve head.

(b) Using a wire brush, thoroughly clean the valve.

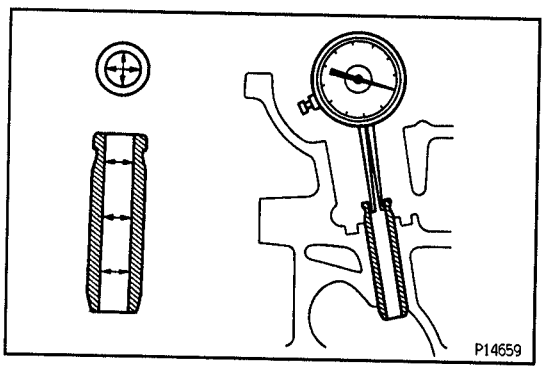

5. INSPECT VALVE STEMS AND GUIDE BUSHINGS

(a) Using a caliper gauge, measure the inside diameter of the guide bushing.

Bushing inside diameter:

6.010 – 6.030 mm (0.2366 – 0.2374 in.)

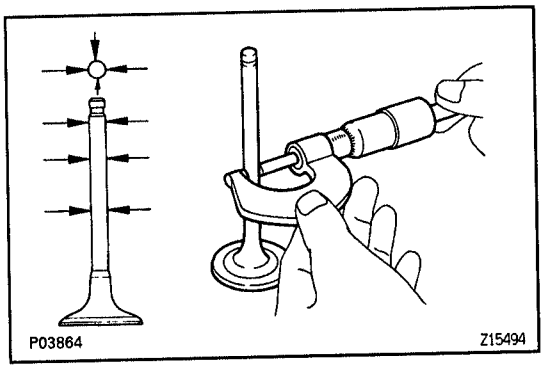

(b) Using a micrometer, measure the diameter of the valve stem.

Valve stem diameter:

Intake

5.970 – 5.985 mm (0.2350 – 0.2356 in.)

Exhaust

5.965 – 5.980 mm (0.2348 – 0.2354 in.)

(c) Subtract the valve stem diameter measurement from the guide bushing inside diameter measurement.

Standard oil clearance:

Intake

0.025 – 0.060 mm (0.0010 – 0.0024 in.)

Exhaust

0.030 – 0.065 mm (0.0012 – 0.0026 in.)

Maximum oil clearance:

Intake

0.08 mm (0.0031 in.)

Exhaust

0.10 mm (0.0039 in.)

If the clearance is greater than maximum, replace the valve and guide bushing.

6. IF NECESSARY, REPLACE VALVE GUIDE BUSHINGS

(a) Gradually heat the cylinder head to 80 – 100°C (176 – 212°F).

(b) Using SST and a hammer, tap out the guide bushing.
SST 09201–10000 (09201–01060),
09950–70010 (09951–07150)

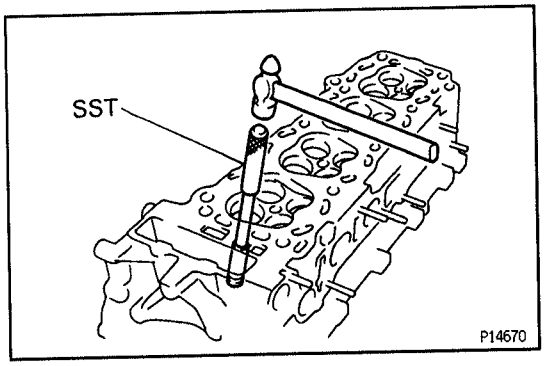

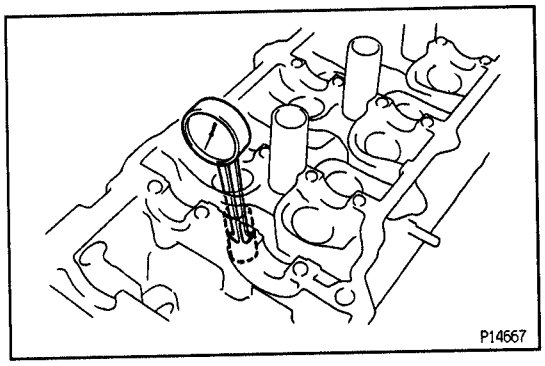

(c) Using a caliper gauge, measure the bushing bore diameter of the cylinder head.

Both intake and exhaust

Bushing bore diameter mm (in.)	Bushing size
11.000 – 11.027 (0.4331 – 0.4341)	Use STD
11.050 – 11.077 (0.4350 – 0.4361)	Use O/S 0.05

V04903

(d) Select a new guide bushing (STD size or O/S 0.05).
If the bushing bore diameter of the cylinder head is greater than 11.027 mm (0.4341 in.), machine the bushing bore to these dimension:
11.050 – 11.077 mm (0.4350 – 0.4361 in.)
If the bushing bore diameter of the cylinder head is greater than 11.077 mm (0.4361 in.), replace the cylinder head.

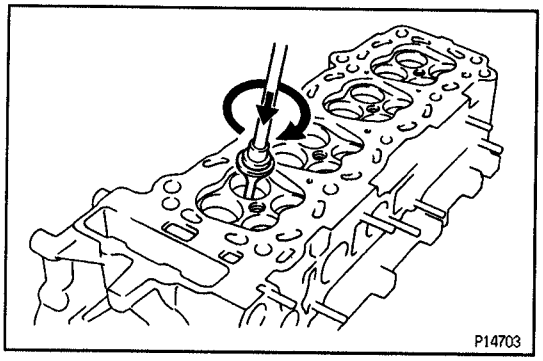

(d) Hand–lap the valve and valve seat with an abrasive compound.

(e) After hand–lapping, clean the valve and valve seat.

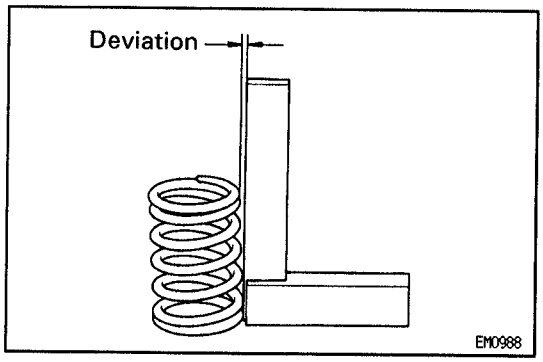

9. INSPECT VALVE SPRINGS

(a) Using a steel square, measure the deviation of the valve spring.

Maximum deviation:

2.0 mm (0.079 in.)

If the deviation is greater than maximum, replace the valve spring.

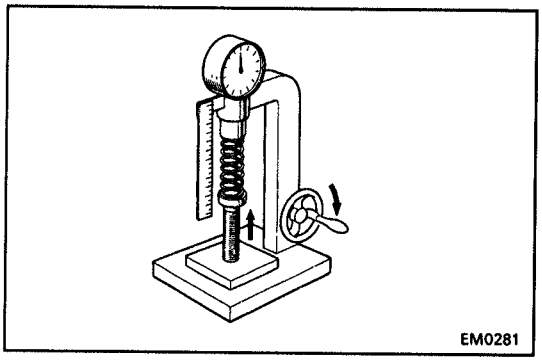

(b) Using a spring tester, measure the tension of the valve spring at the specified installed length.

Installed tension:

At 35.7 mm (1.406 in.):

177 – 204 N (18.0 – 20.8 kgf, 39.7 – 45.9 lbf)

If the installed tension is not as specified, replace the valve spring.

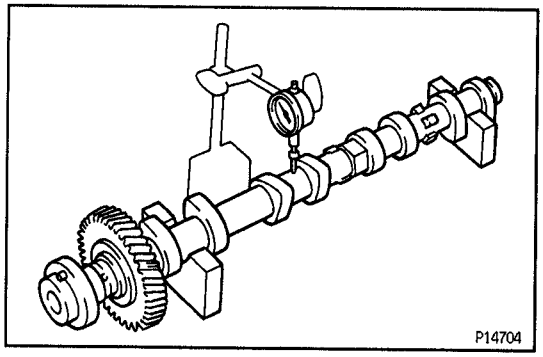

10. INSPECT CAMSHAFTS AND BEARINGS

A. Inspect camshaft for runout

(a) Place the camshaft on V–blocks.

(b) Using a dial indicator, measure the circle runout at the center journal.

Maximum circle runout:

0.06 mm (0.0024 in.)

If the circle runout is greater than maximum, replace the camshaft.

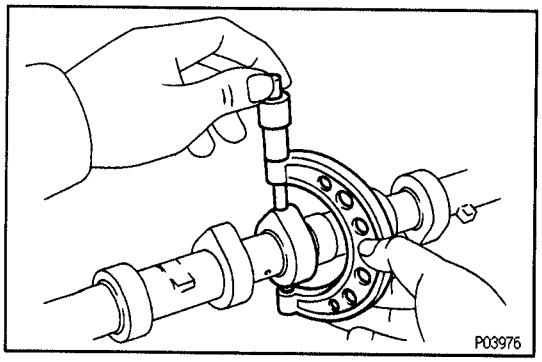

B. Inspect cam lobes

Using a micrometer, measure the cam lobe height.

Standard cam lobe height:

Intake

45.31 – 45.41 mm (1.7839 – 1.7878 in.)

Exhaust

45.06 – 45.16 mm (1.7740 – 1.7779 in.)

If the cam lobe height is less than standard allowable, replace the camshaft.

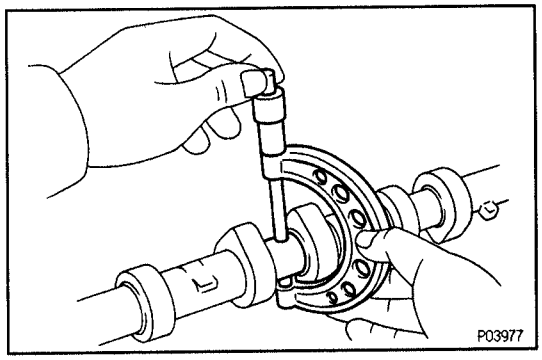

C. Inspect camshaft journals

Using a micrometer, measure the journal diameter.

Journal diameter:

26.959 – 26.975 mm (1.0614 – 1.0620 in.)

If the journal diameter is not as specified, check the oil clearance.

D. Inspect camshaft bearings

Check the bearings for flaking and scoring.

If the bearings are damaged, replace the bearing caps and cylinder head as a set.

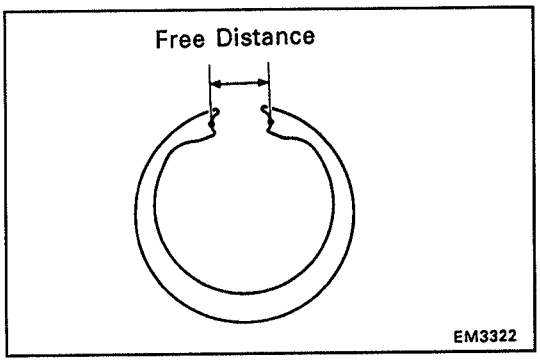

E. Inspect camshaft gear spring

Using a vernier caliper, measure the free distance between the spring ends.

Free distance:

22.5 – 22.9 mm (0.886 – 0.902 in.)

If the free distance is not as specified, replace the gear spring.

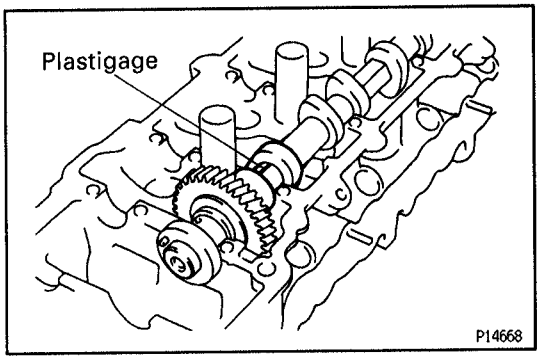

F. Inspect camshaft journal oil clearance

(a) Clean the bearing caps and camshaft journals.

(b) Place the camshafts on the cylinder head.

(c) Lay a strip of Plastigage across each of the camshaft journals.

(d) Install the bearing caps.
(See step 3 in cylinder head installation)
Torque: 15.5 N·m (160 kgf·cm, 12 ft·lbf)
NOTICE: Do not turn the camshaft.

(e) Remove the bearing caps.

(f) Measure the Plastigage at its widest point.
Standard oil clearance:
0.025 – 0.062 mm (0.0010 – 0.0024 in.)
Maximum oil clearance:
0.08 mm (0.0031 in.)
If the oil clearance is greater than maximum, replace the camshaft. If necessary, replace the bearing caps and cylinder head as a set.

(g) Completely remove the Plastigage.

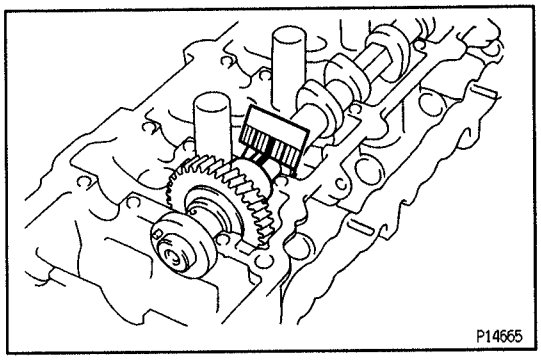

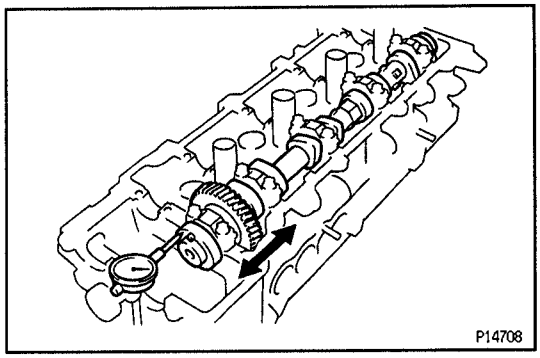

G. Inspect camshaft thrust clearance

(a) Install the camshaft.
(See step 3 in cylinder head installation)

(b) Using a dial indicator, measure the thrust clearance while moving the camshaft back and forth.
Standard thrust clearance:
0.040 – 0.095 mm (0.0016 – 0.0037 in.)
Maximum thrust clearance:
0.12 mm (0.0047 in.)

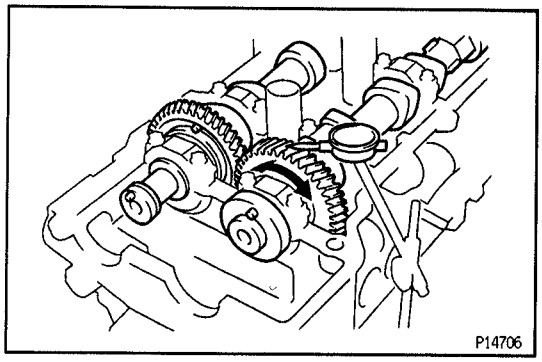

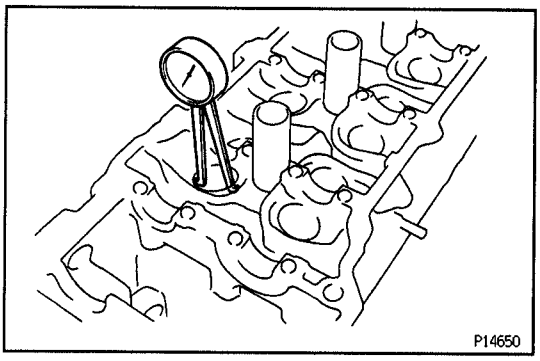

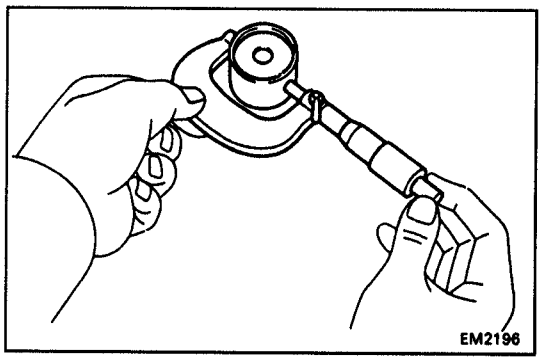

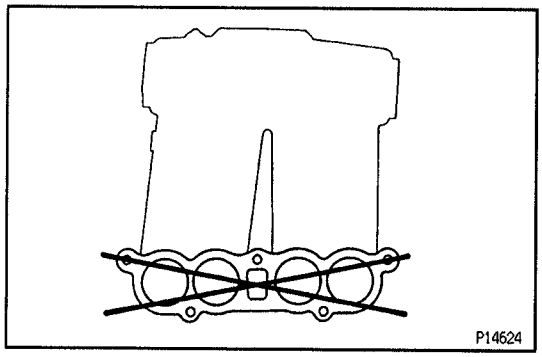

If the thrust clearance is greater than maximum, replace the camshaft. If necessary, replace the bearing caps and cylinder head as a set.

H. Inspect camshaft gear backlash

(a) Install the camshafts without installing the exhaust cam sub–gear.
(See step 3 in cylinder head installation)

(b) Using a dial indicator, measure the backlash.
Standard backlash:
0.020 – 0.200 mm (0.0008 – 0.0079 in.)
Maximum backlash:
0.30 mm (0.0188 in.)
If the backlash is greater than maximum, replace the camshafts.

11. INSPECT VALVE LIFTERS AND LIFTER BORES

(a) Using a caliper gauge, measure the lifter bore diameter of the cylinder head.
Lifter bore diameter:
31.000 – 31.016 mm (1.2205 – 1.2211 in.)

(b) Using a micrometer, measure the lifter diameter.
Lifter diameter:
30.966 – 30.976 mm (1.1578 – 1.2195 in.)

(c) Subtract the lifter diameter measurement from the lifter bore diameter measurement.
Standard oil clearance:
0.024 – 0.050 mm (0.0009 – 0.0020 in.)
Maximum oil clearance:
0.07 mm (0.0028 in.)
If the oil clearance is greater than maximum, replace the lifter. If necessary, replace the cylinder head.

12. INSPECT AIR INTAKE CHAMBER

Using a precision straight edge and thickness gauge, measure the surface contacting the intake manifold for warpage.
Maximum warpage:
0.20 mm (0.0078 in.)
If warpage is greater than maximum, replace the air intake chamber.

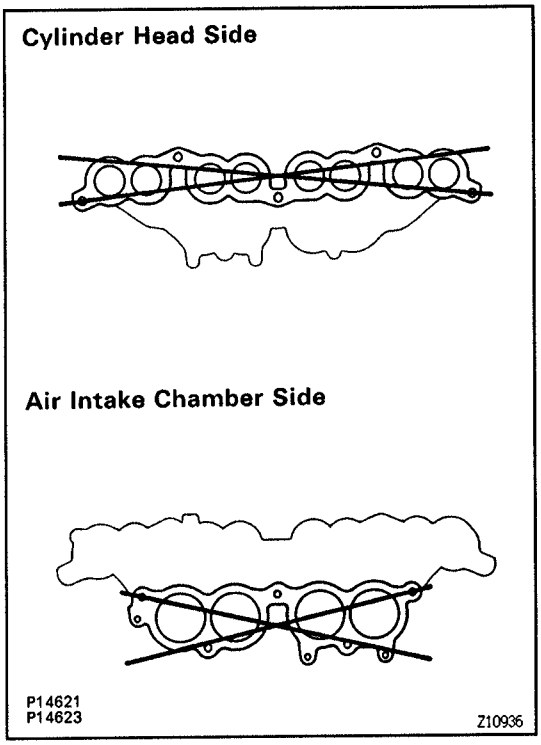

13. INSPECT INTAKE MANIFOLD

Using a precision straight edge and thickness gauge, measure the surface contacting the cylinder head and air intake chamber for warpage.

Maximum warpage:

0.20 mm (0.0078 in.)

If warpage is greater than maximum, replace the manifold.

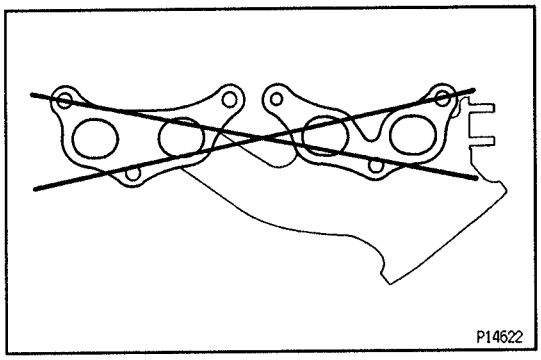

14. INSPECT EXHAUST MANIFOLD

Using a precision straight edge and thickness gauge, measure the surface contacting the cylinder head for warpage.

Maximum warpage:

0.50 mm (0.0197 in.)

If warpage is greater than maximum, replace the manifold.

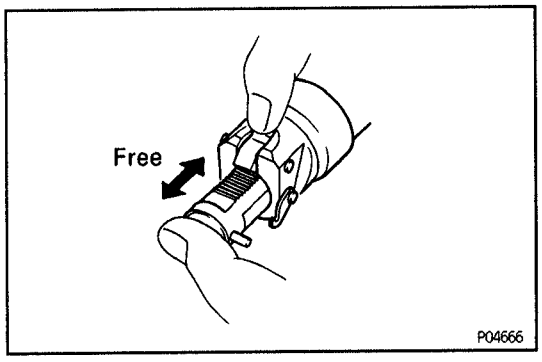

15. INSPECT CHAIN TENSIONER

(a) Check that the plunger moves smoothly when the ratchet pawl is raised with your finger.

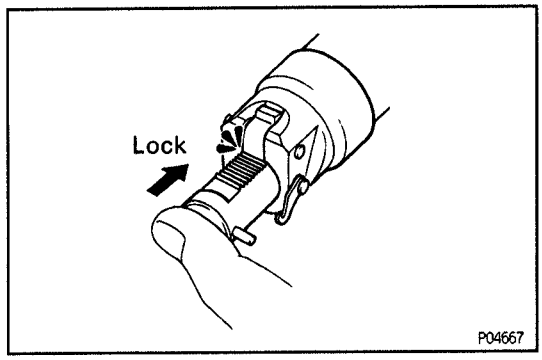

(b) Released the ratchet pawl and check that the plunger is locked in place by the ratchet pawl and does not move when pushed with your finger.

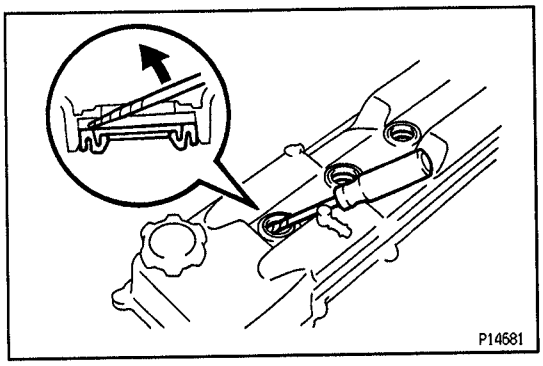

16. IF NECESSARY, REPLACE SPARK PLUG TUBE GASKETS

(a) Using a screwdriver, pry out the tube gasket.

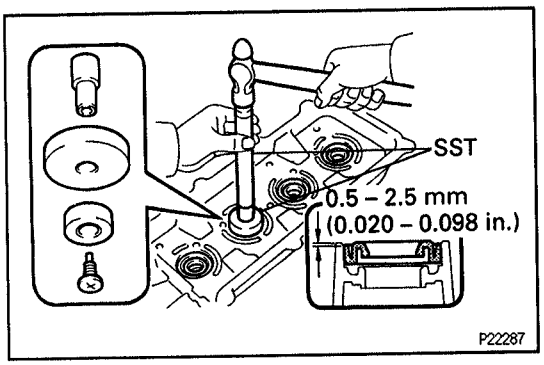

(b) Using SST and a hammer, tap in a new tube gasket as shown in the illustration.
SST 09950–60010 (09951–00260, 09951–00490, 09952–06010), 09950–70010 (09951–07150)

(c) Apply a light coat of MP grease to the gasket lip.

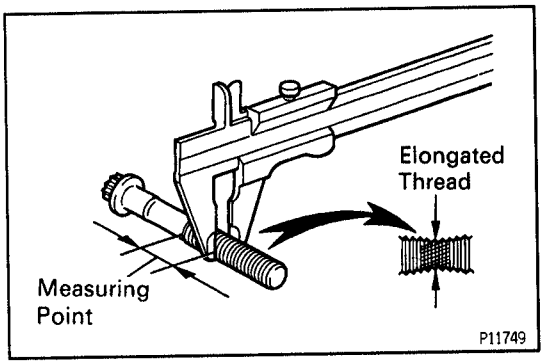

17. INSPECT CYLINDER HEAD BOLTS

Using vernier calipers, measure the minimum diameter of the elongated thread at the measuring point.

Standard outside diameter:

10.76 – 10.97 mm (0.4236 – 0.4319 in.)

Minimum outside diameter:

10.40 mm (0.4094 in.)

If the diameter is less than minimum, replace the bolt.

EG5C3–03

CYLINDER HEAD ASSEMBLY

HINT:

- Thoroughly clean all parts to be assembled.
- Before installing the parts, apply fresh engine oil to all sliding and rotating surfaces.
- Replace all gaskets and oil seals with new ones.

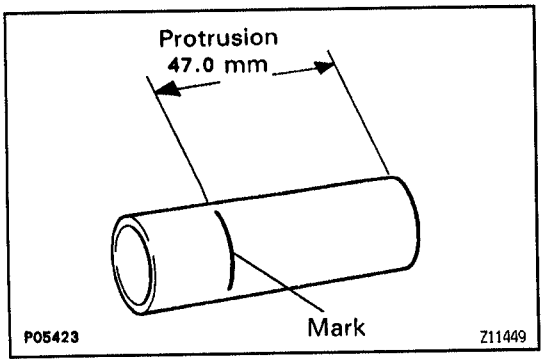

1. INSTALL SPARK PLUG TUBES

HINT: When using a new cylinder head, spark plug tubes must be installed.

(a) Mark the standard position away from the edge, onto the spark plug tube.

Standard protrusion:

47.0 mm (1.850 in.)

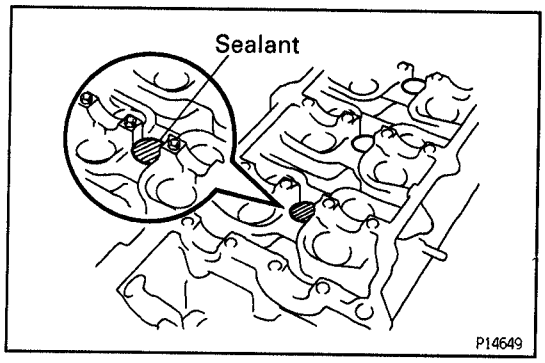

(b) Apply adhesive to the spark plug tube hole of the cylinder head.
Sealant:
Part No. 08833 – 00070, Adhesive 1324, THREE BOND 1324 or equivalent

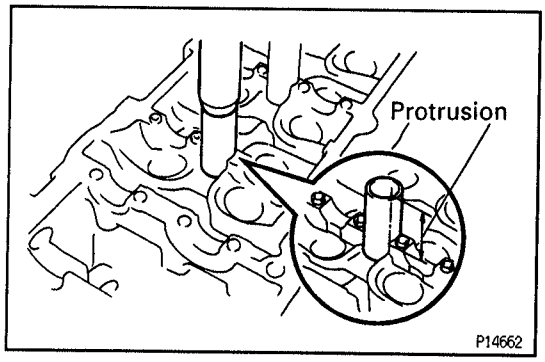

(c) Using a press, press in a new spark plug tube until there is 47.0 mm (1.850 in.) protruding from the camshaft bearing cap installation surface of the cylinder head.
NOTICE: Avoid pressing a new spark plug tube in too far by measuring the amount of protrusion while pressing.

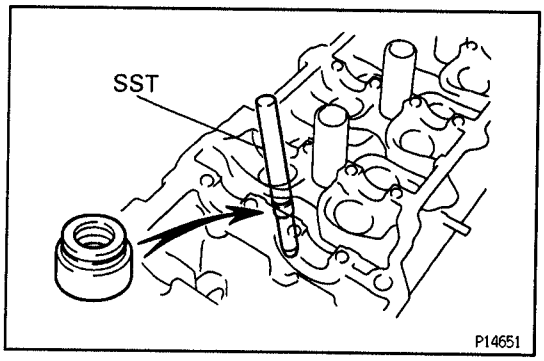

2. INSTALL VALVES

(a) Using SST, push in a new oil seal.
SST 09236–00101 (09236–15010)
HINT: Different oil seals are used for the intake and exhaust.
Code mark (Intake side only):
"H"

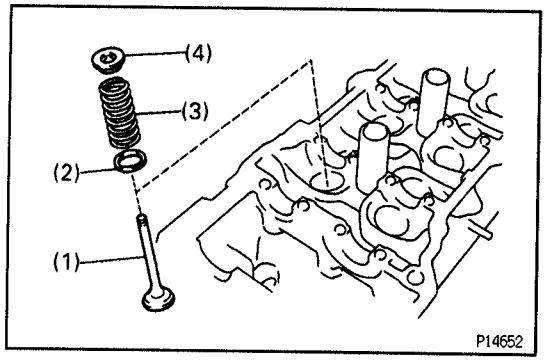

(b) Install these parts:
(1) Valve
(2) Spring seat
(3) Valve spring
(4) Spring retainer

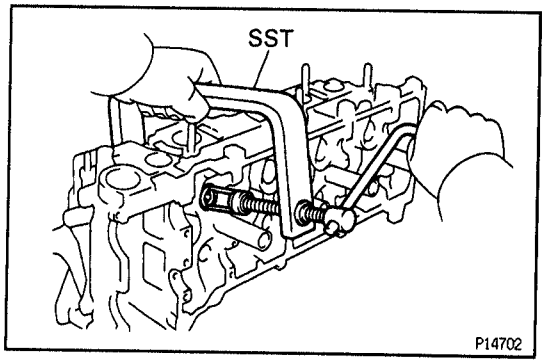

(c) Using SST, compress the valve spring and place the 2 keepers around the valve stem.
SST 09202–70020 (09202–00010)
(d) Using a plastic–faced hammer, lightly tap the valve stem tip to ensure a proper fit.

3. INSTALL VALVE LIFTERS AND SHIMS

(a) Install the valve lifter and shim.
(b) Check that the valve lifter rotates smoothly by hand.

EG64G-01

CYLINDER HEAD INSTALLATION

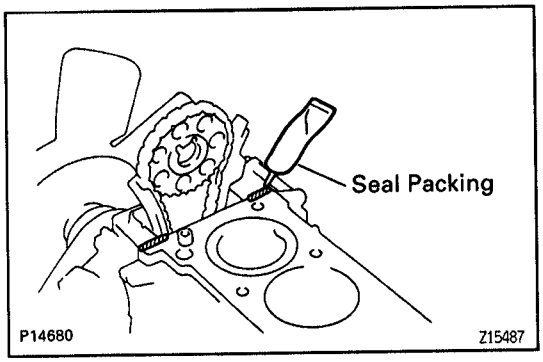

1. INSTALL CYLINDER HEAD

A. Place cylinder head on cylinder block

(a) Apply seal packing to the 2 locations as shown.

Seal packing:

Part No. 08826–00080 or equivalent

NOTICE: Do not apply too much seal packing.

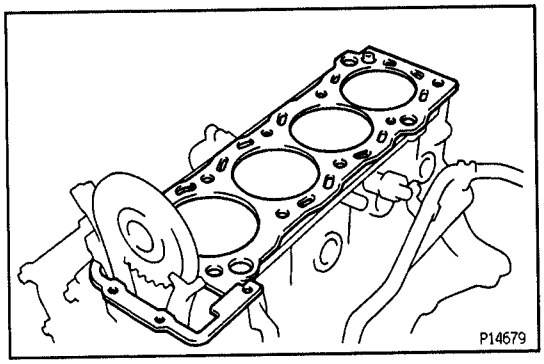

(b) Place a new cylinder head gasket in position on the cylinder block.

NOTICE: Be careful of the installation direction.

(c) Place the cylinder head in position on the cylinder head gasket.

B. Install cylinder head bolts

HINT:

- The cylinder head bolts are tightened in 3 progressive steps (steps (b) and (d)).
- If any cylinder head bolt is broken or deformed, replace it.

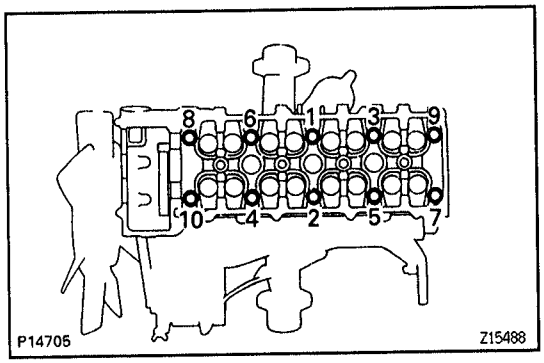

(a) Apply a light coat of engine oil on the threads and under the heads of the cylinder head bolts.

(b) Install and uniformly tighten the 10 cylinder head bolts and plate washers, in several passes, in the sequence shown.

Torque: 39 N·m (400 kgf·cm, 29 ft·lbf)

If any of the cylinder head bolts does not meet the torque specification, replace the cylinder head bolt.

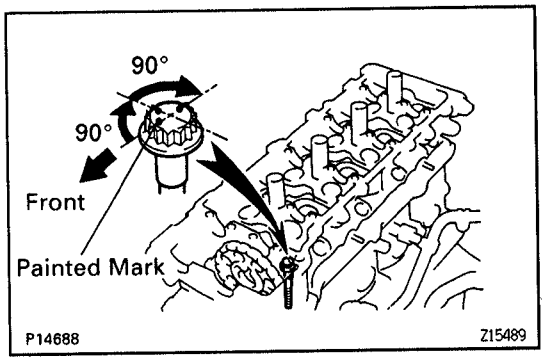

(c) Mark the front of the cylinder head bolt head with paint.

(d) Retighten the cylinder head bolts by 90° in the numerical order shown.

(e) Retighten the cylinder head bolts by an additional 90°.

(f) Check that the painted mark is now facing rearward.

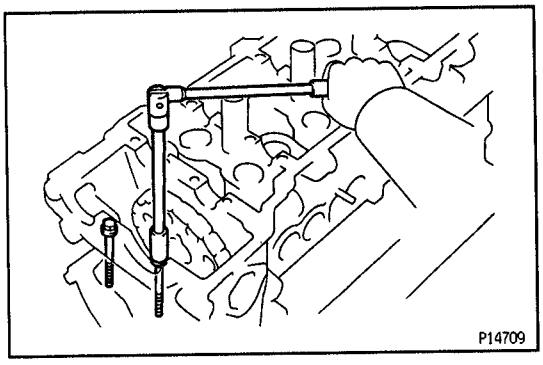

(g) Install and torque the 2 bolts.

Torque: 21 N·m (210 kgf·cm, 15 ft·lbf)

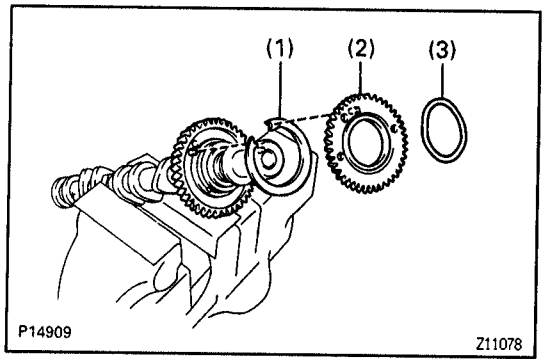

EG

2. ASSEMBLE EXHAUST CAMSHAFT

(a) Mount the hexagon wrench head portion of the camshaft in a vise.

NOTICE: Be careful not to damage the camshaft.

(b) Install these parts:
(1) Camshaft gear spring
(2) Camshaft sub–gear
(3) Wave washer

HINT: Align the pins on the gears with the spring ends.

(c) Using snap ring pliers, install the snap ring.

(d) Using SST, align the holes of the camshaft main gear and sub–gear by turning sub–gear clockwise, and install a service bolt.

SST 09960–10010 (09962–01000, 09963–00500)

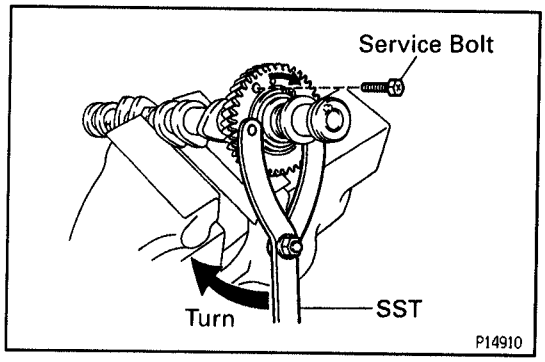

3. INSTALL CAMSHAFTS

NOTICE: Since the thrust clearance of the camshaft is small, the camshaft must be kept level while it is being installed. If the camshaft is not kept level, the portion of the cylinder head receiving the shaft thrust may crack or be damaged, causing the camshaft to seize or break. To avoid this, these steps should be carried out.

A. Install intake camshaft

(a) Apply MP grease to the thrust portion of the intake camshaft.

(b) Place the intake camshaft with knock pin facing upward of camshaft angle on the cylinder head.

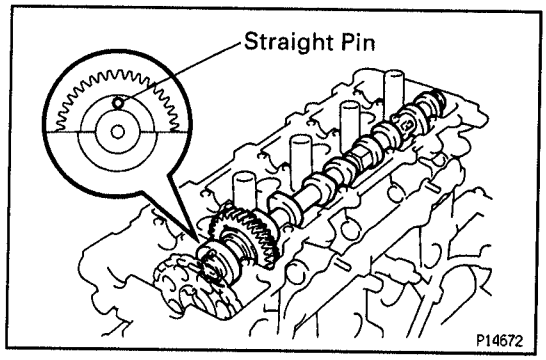

(c) Install the bearing caps in their proper locations.

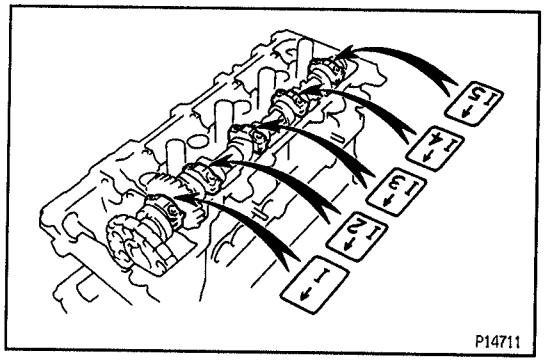

(d) Apply a light coat of engine oil on the threads and under the heads of the bearing cap bolts.

(e) Install and uniformly tighten the 10 bearing cap bolts in the sequence shown.

Torque: 15.5 N·m (160 kgf·cm, 12 ft·lbf)

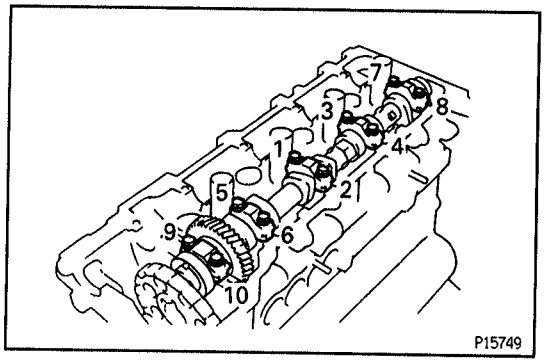

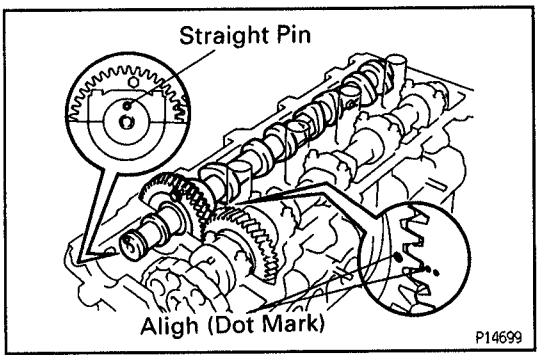

B. Install exhaust camshaft

(a) Apply MP grease to the thrust portion of the exhaust camshaft.

(b) Engage the exhaust camshaft gear to the intake camshaft gear by matching the timing marks (1 and 2 dots) on each gear.

NOTICE: There are also timing marks (for TDC) on each gear as shown in the illustration. Do not use these marks.

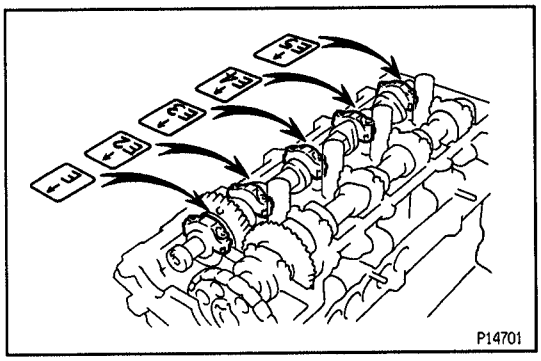

(c) Roll down the exhaust camshaft onto the bearing journals while engaging gears with each other.

(d) Install the bearing caps in their proper locations.

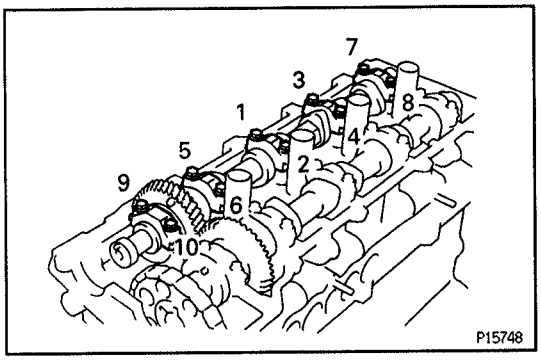

(e) Apply light coat of engine oil on the threads and under the heads of the bearing cap bolts.

(f) Install and uniformly tighten the 10 bearing cap bolts, in several passes, in the sequence shown.

Torque: 15.5 N·m (160 kgf·cm, 12 ft·lbf)

(g) Remove the service bolt.

(h) Check that the intake and exhaust camshafts turn smoothly.

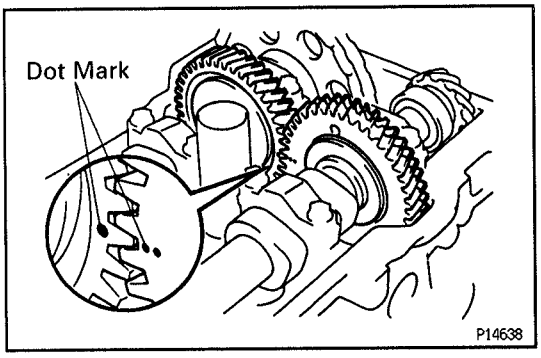

4. SET NO.1 CYLINDER TO TDC/COMPRESSION

(a) Turn the crankshaft pulley clockwise, and align its groove with the timing mark "0" of the timing chain cover.

(b) Turn the camshafts so that the timing marks with 1 and 2 dots will be in straight line on the cylinder head surface as shown in the illustration.

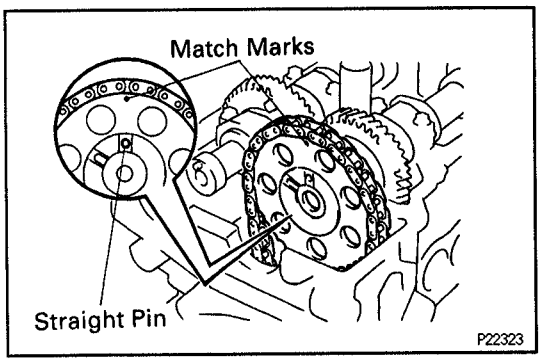

5. INSTALL CAMSHAFT TIMING GEAR

HINT: Check that the matchmarks on the camshaft timing gear and timing chain are aligned.

(a) Place the gear over the straight pin of the intake camshaft.

(b) Hold the intake camshaft with a wrench, install and torque the bolt.

Torque: 73.5 N·m (750 kgf·cm, 54 ft·lbf)

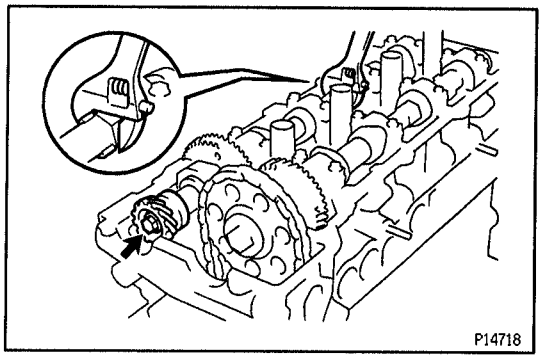

(c) Hold the exhaust camshaft with a wrench, install the bolt and distributor gear.
Torque: 46 N·m (470 kgf·cm, 34 ft·lbf)

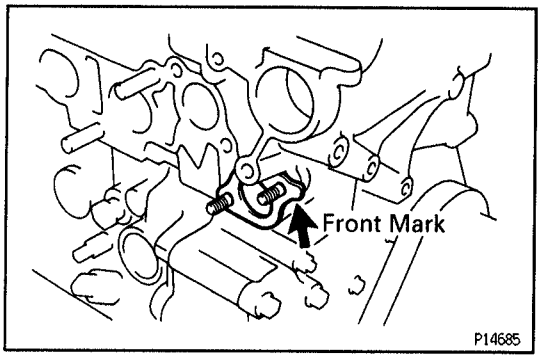

6. INSTALL CHAIN TENSIONER

(a) Place a new gasket so that the front mark is toward the front side.

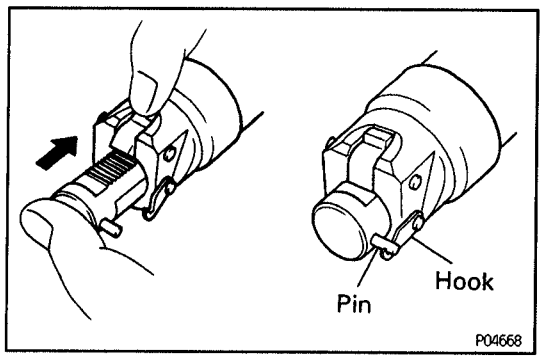

(b) Release the ratchet pawl, fully push in the plunger and apply the hook to the pin so that the plunger cannot spring out.

(c) Turn the crankshaft pulley clockwise to provide some slack for the chain on the tensioner side.
NOTICE: Do not turn the pulley counterclockwise.

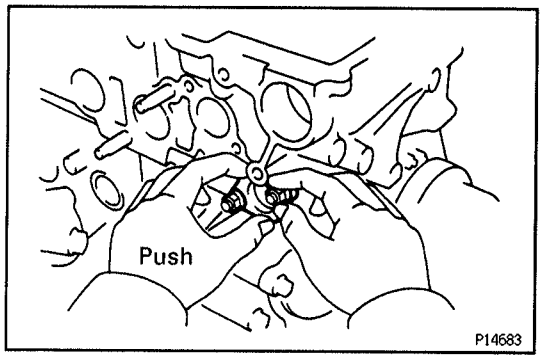

(d) Push the tensioner by hand until it touches the head installation surface, then install the 2 nuts.

(e) Tighten the 2 nuts.
Torque: 21 N·m (210 kgf·cm, 15 ft·lbf)

(f) Check that the hook of the tensioner is not released.
NOTICE: If the plunger springs out during installation of the chain tensioner, repeat the operation in step (b) before installing the tensioner.

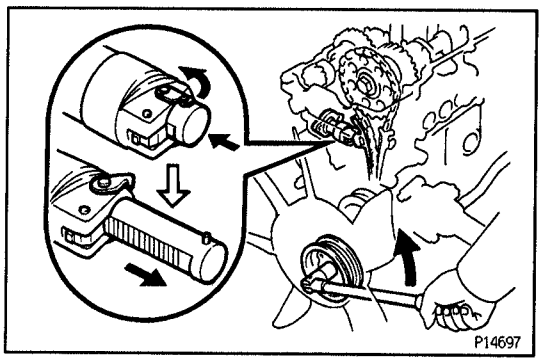

7. SET CHAIN TENSIONER

Turn the crankshaft to the left so that the hook of the chain tensioner is released from the pin of the plunger, causing the plunger to spring out and the slipper to be pushed in to the chain.

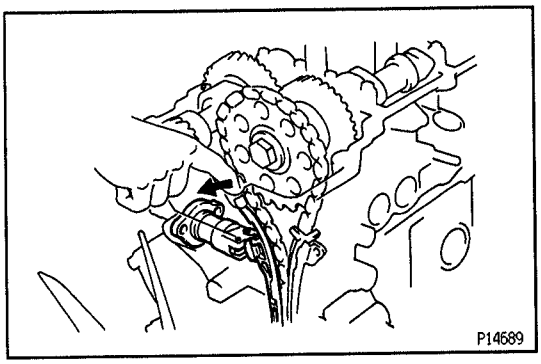

HINT: If the plunger does not spring out, press the slipper into the chain tensioner with a screwdriver or your finger so that the hook is released and the plunger springs out.

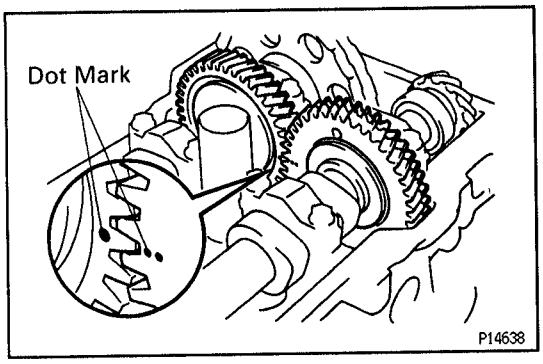

8. CHECK VALVE TIMING

(a) Turn the crankshaft pulley, and align its groove with the timing mark "0" of the timing chain cover.
NOTICE: Always turn the crankshaft clockwise.

(b) Check that the timing marks (1 and 2 dots) of the camshaft drive and driven gears are in straight line on the cylinder head surface as shown in the illustration. If not, turn the crankshaft 1 revolution (360°) and align the marks as above.

9. CHECK AND ADJUST VALVE CLEARANCE
(See step 8 in valve clearance inspection and adjustment)
Valve clearance (Cold):
Intake
0.15 – 0.25 mm (0.006 – 0.010 in.)
Exhaust
0.25 – 0.35 mm (0.010 – 0.014 in.)

10. INSTALL SPARK PLUGS

11. INSTALL SEMI–CIRCULAR PLUGS

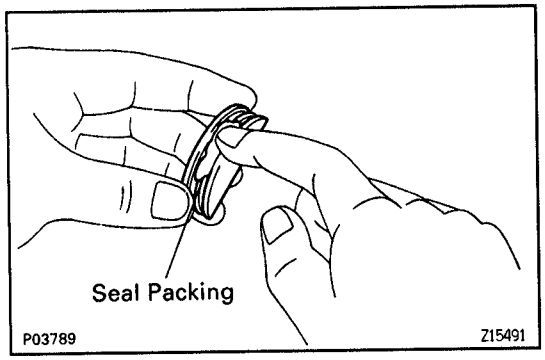

(a) Remove any old packing (FIPG) material.

(b) Apply seal packing to the cylinder head installation surface of the semi–circular plugs.
Seal packing:
Part No. 08826–00080 or equivalent

(c) Install the semi–circular plug to the cylinder head.

12. INSTALL CYLINDER HEAD COVER

13. INSTALL ENGINE WIRE BRACKETS

14. INSTALL FRONT ENGINE HANGER
Torque: 42 N·m (420 kgf·cm, 30 ft·lbf)

15. INSTALL CYLINDER HEAD REAR COVER
Install a new gasket and the rear cover with the 3 bolts.
Torque: 13.5 N·m (135 kgf·cm, 10 ft·lbf)

16. INSTALL WATER OUTLET

(a) Install a new gasket and the water outlet with the 2 bolts.
Torque: 20 N·m (200 kgf·cm, 14 ft·lbf)

(b) Connect the upper radiator hose.

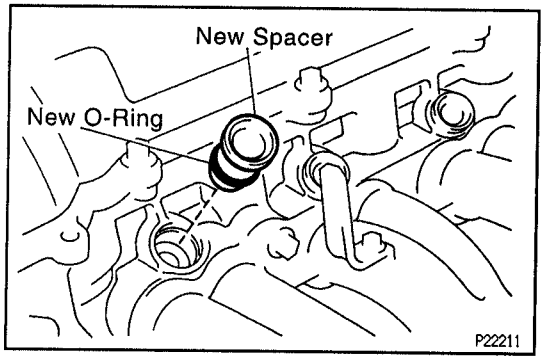

17. INSTALL EXHAUST MANIFOLD

(a) Install a new gasket and the exhaust manifold with the 6 nuts.
Torque: 49 N·m (500 kgf·cm, 36 ft·lbf)

(b) Install the heat insulator with the 2 bolts and 2 nuts.
Torque: 5.5 N·m (55 kgf·cm, 48 in.·lbf)

18. INSTALL FRONT EXHAUST PIPE
(See engine installation in cylinder block)

19. INSTALL INTAKE MANIFOLD
Install a new gasket and the intake manifold with the 3 bolts and 2 nuts.
Torque: 29 N·m (300 kgf·cm, 22 ft·lbf)

20. INSTALL INJECTORS AND DELIVERY PIPE
(See steps 1 and 2 in injectors installation in MFI System)
HINT: When using a new cylinder head, spacers must be installed.
Apply a light coat of gasoline to a new O–ring and install it to a new spacer.

21. INSTALL FUEL RETURN PIPE

22. INSTALL FUEL INLET PIPE
Install the fuel inlet pipe and 4 new gaskets with 2 union bolts.
Torque: 29 N·m (300 kgf·cm, 22 ft·lbf)

23. CONNECT INJECTOR CONNECTORS

24. INSTALL AIR INTAKE CHAMBER ASSEMBLY

(a) Install a new gasket and the air intake chamber assembly with the 3 bolts and 2 nuts.
Torque: 21 N·m (210 kgf·cm, 15 ft·lbf)

(b) Connect these hoses:
- EVAP hose to throttle body
- Brake booster vacuum hose to union
- Water bypass hose to water bypass pipe
- Water bypass hose to cylinder head rear cover

25. INSTALL INTAKE CHAMBER STAY
Torque: 20 N·m (200 kgf·cm, 15 ft·lbf)

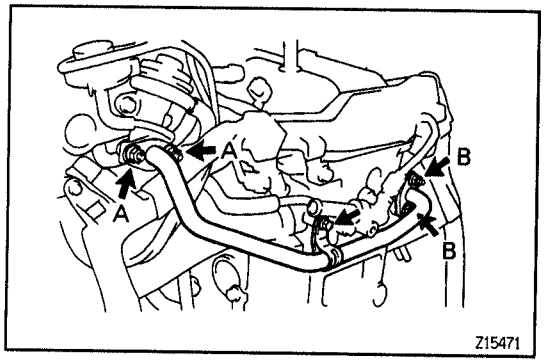

26. INSTALL EGR PIPE
Install 2 new gaskets and EGR pipe with the bolt and 4 nuts.
Torque:
Bolt: 18 N·m (185 kgf·cm, 13 ft·lbf)
Nut A: 19 N·m (195 kgf·cm, 14 ft·lbf)
Nut B: 20 N·m (200 kgf·cm, 15 ft·lbf)

27. CONNECT ENGINE WIRE

28. INSTALL DISTRIBUTOR
(See distributor installation in Ignition System)

29. INSTALL PCV HOSES

30. w/ PS:
INSTALL PS PUMP AND BRACKET

(a) Install the PS pump bracket with the 4 bolts.
Torque: 20 N·m (200 kgf·cm, 15 ft·lbf)

(b) Connect the PS pump to the bracket with the 2 bolts.
Torque: 58 N·m (590 kgf·cm, 43 ft·lbf)

(c) Connect the 2 air hoses to the throttle body and air intake chamber.

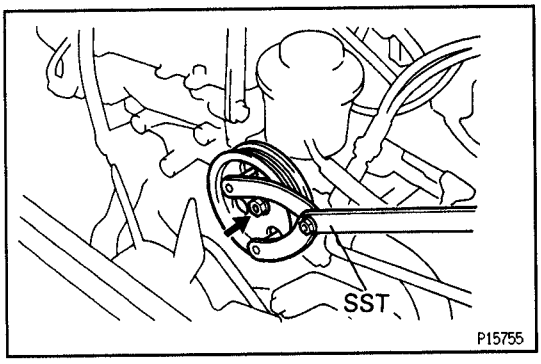

(d) Using SST, install the PS pump pulley with the nut.
SST 09960–10010 (09962–01000, 09963–01000)
Torque: 43 N·m (440 kgf·cm, 32 ft·lbf)

31. w/ PS:
INSTALL DRIVE BELT IDLER PULLEY FOR PS PUMP
Torque: 20 N·m (200 kgf·cm, 14 ft·lbf)

32. INSTALL DRIVE BELT FOR PS PUMP
(See SR section)

33. INSTALL OIL DIPSTICK GUIDE
Torque: 20 N·m (200 kgf·cm, 15 ft·lbf)

34. INSTALL INTAKE AIR CONNECTOR
Torque: 18 N·m (185 kgf·cm, 13 ft·lbf)

35. INSTALL AIR CLEANER CAP, MAF METER AND RESONATOR ASSEMBLY

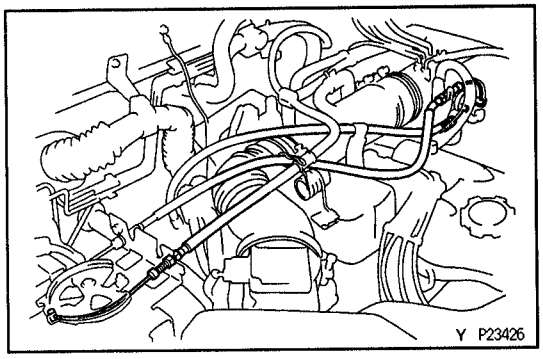

36. CONNECT THESE CABLES:

(a) M/T:
Connect the throttle cable to the throttle body.

(b) A/T:
Connect the accelerator and throttle cables to the throttle body.

(c) w/ Cruise Control System:
Connect the cruise control cable to the actuator, and install the actuator cover.

37. FILL WITH ENGINE COOLANT

38. START ENGINE AND CHECK FOR LEAKS

39. VEHICLE ROAD TEST
Check for abnormal noise, shock, slippage, correct shift points and smooth operation.

40. RECHECK ENGINE COOLANT LEVEL

TIMING CHAIN

COMPONENTS FOR REMOVAL AND INSTALLATION

EG5MK–02

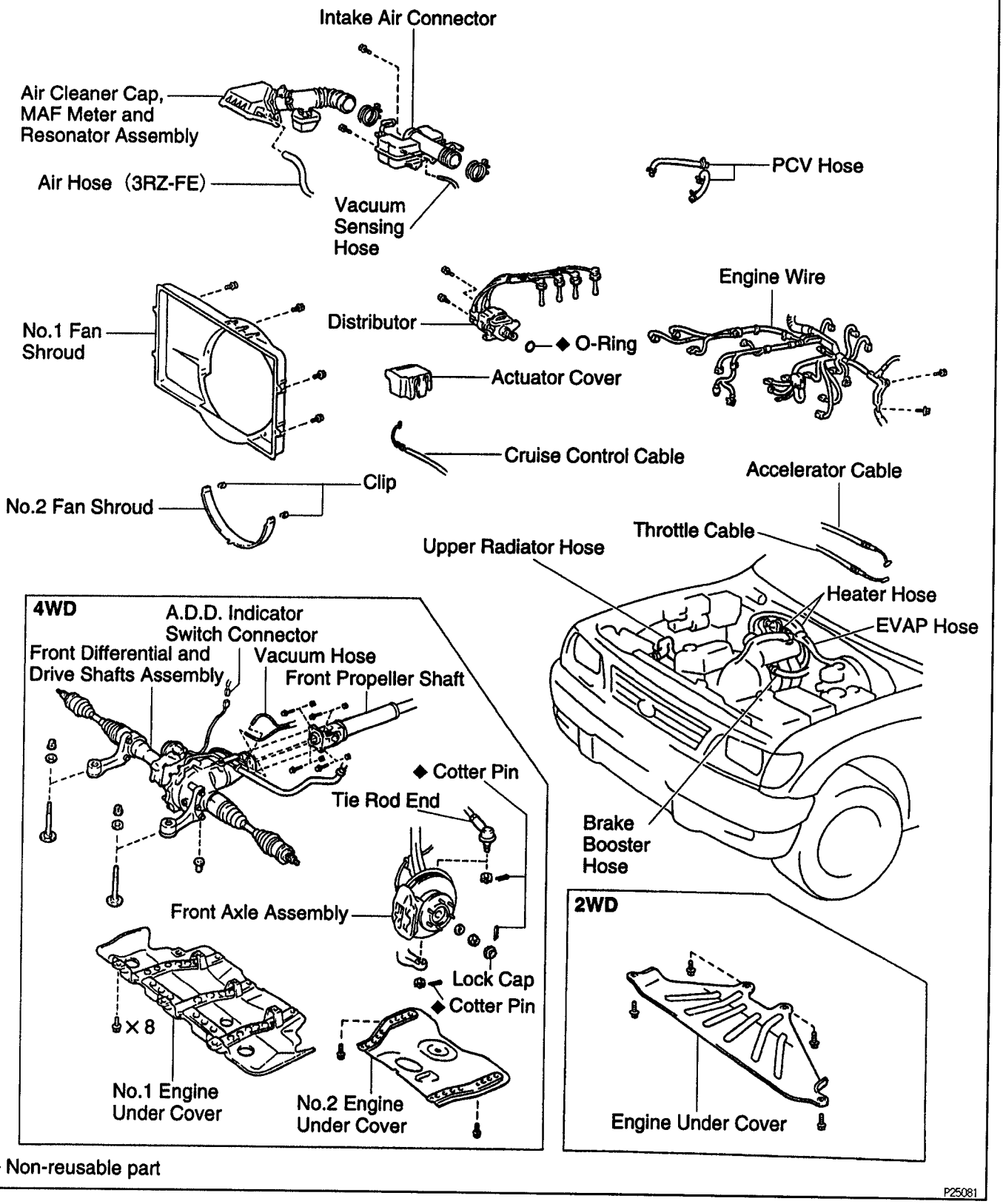

◆ Non-reusable part

P25081

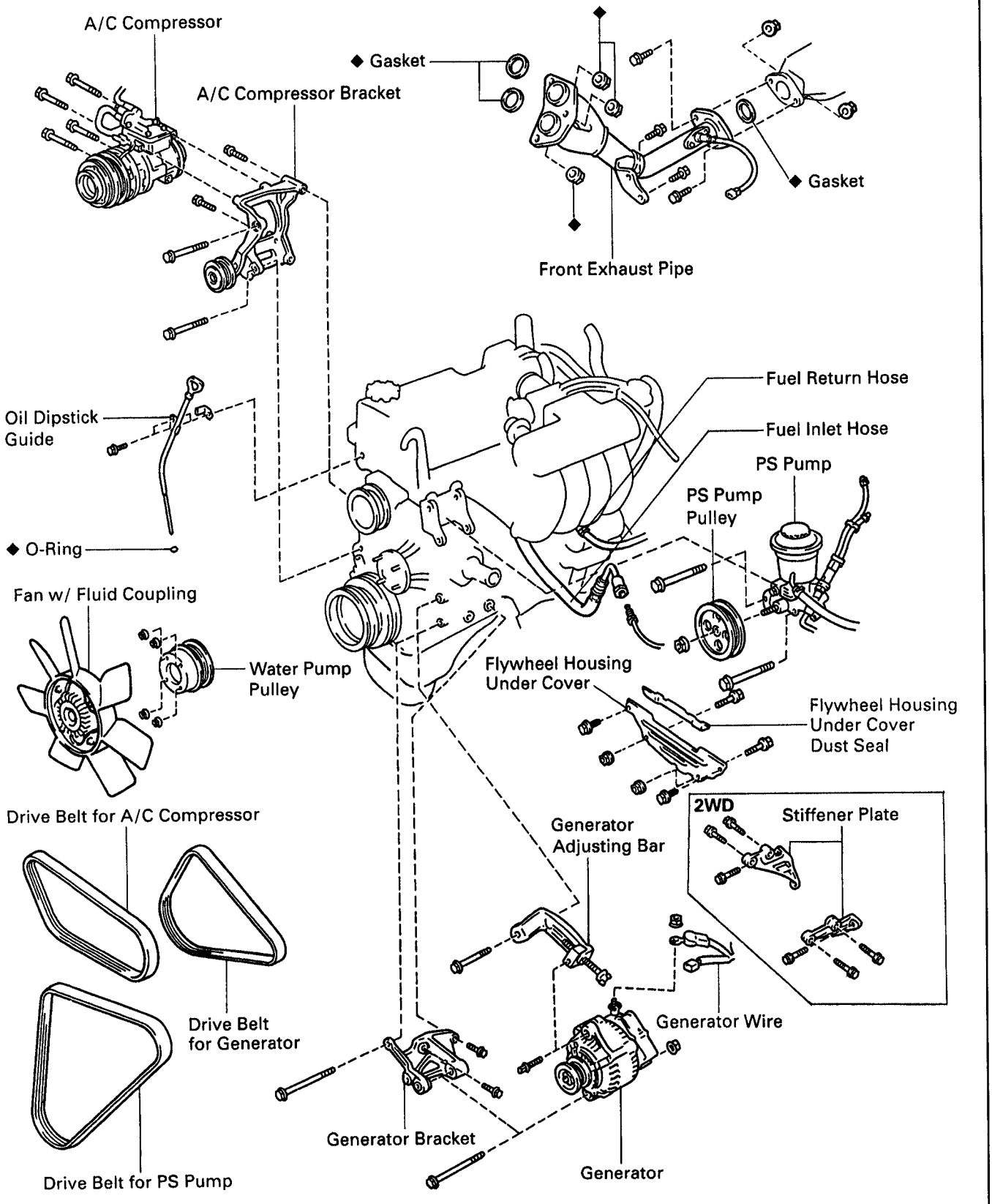

◆ Non-reusable part

P22485

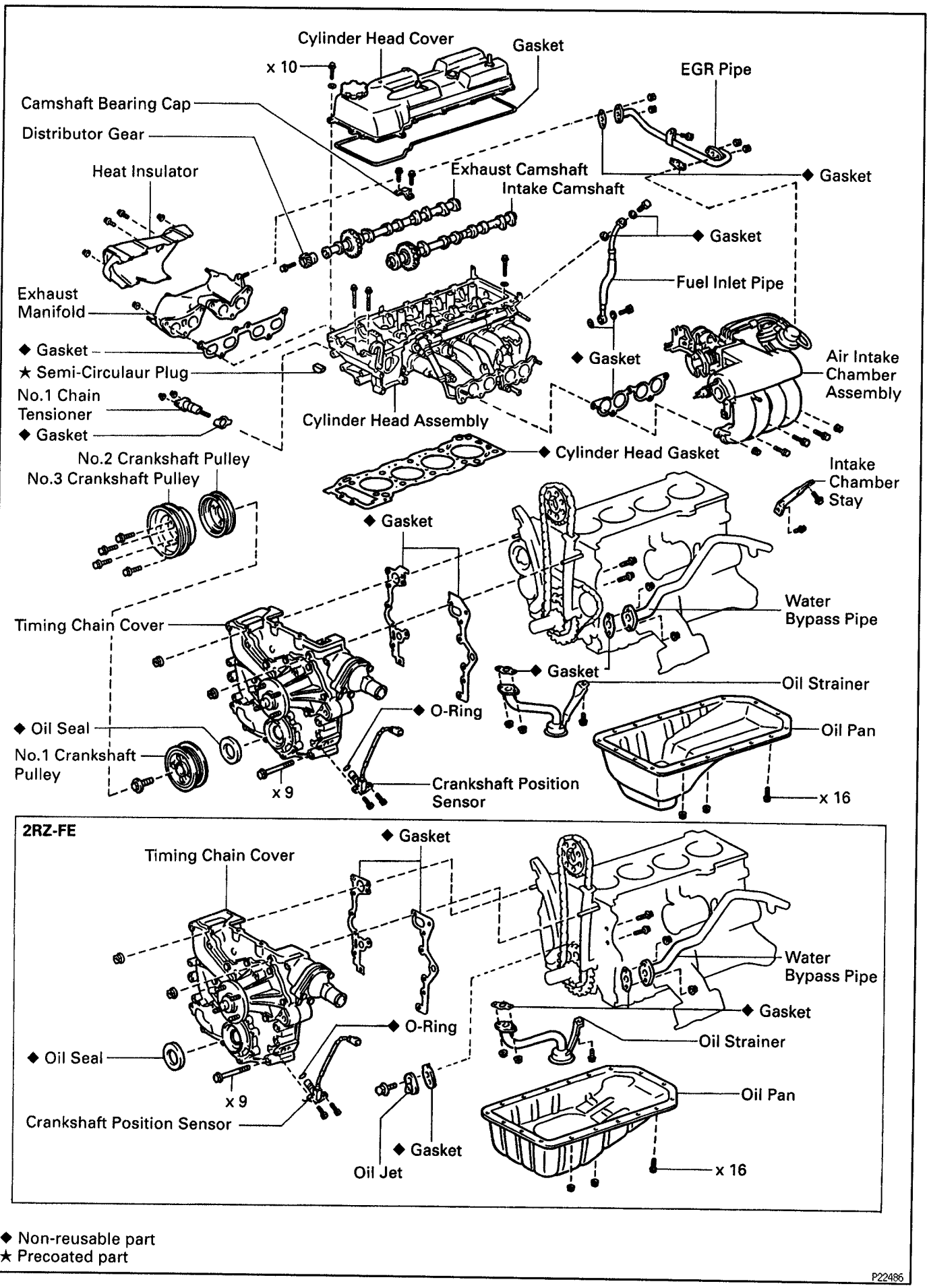

◆ Non-reusable part
★ Precoated part

P22486

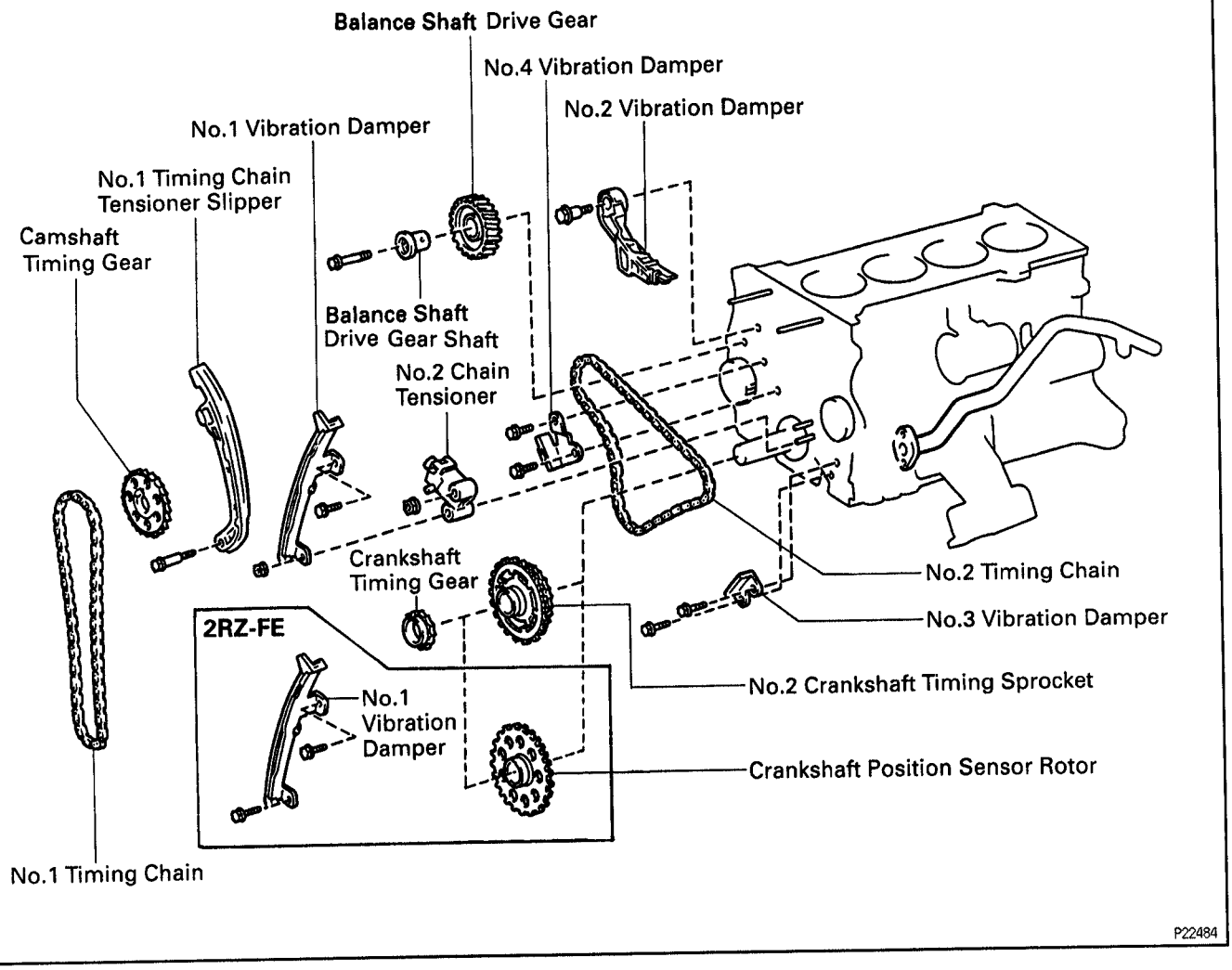

EG6ML–02

TIMING CHAIN REMOVAL

1. **REMOVE ENGINE UNDER COVER**
2. **DRAIN ENGINE OIL**
3. **4WD:**
   REMOVE FRONT DIFFERENTIAL AND DRIVE SHAFTS ASSEMBLY
   (See front differential and front drive shaft removal in Suspension and Axle)
4. **REMOVE DRIVE BELT FOR GENERATOR, FAN WITH FLUID COUPLING AND WATER PUMP PULLEY**
   (See steps 3 to 9 in water pump removal in Cooling System)
5. **REMOVE CYLINDER HEAD ASSEMBLY**
   (See cylinder head removal)

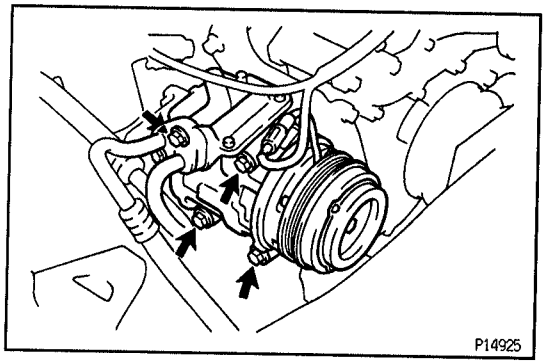

6. w/ A/C:
DISCONNECT A/C COMPRESSOR AND BRACKET

(a) Remove the 4 bolts, and disconnect the compressor from the bracket.
HINT: Put aside the compressor, and suspend it.

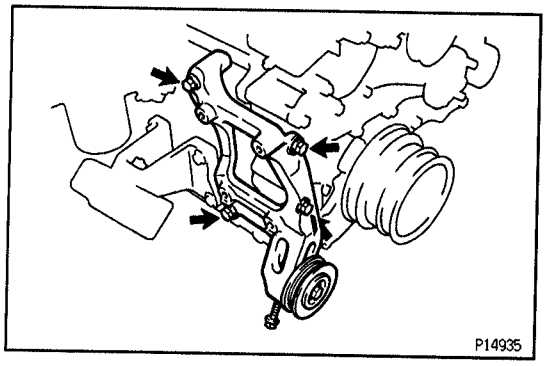

(b) Remove the 4 bolts and A/C compressor bracket.

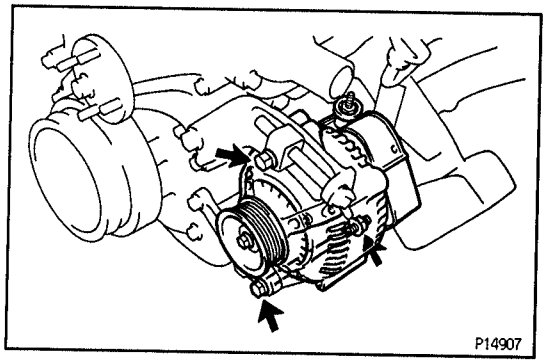

7. REMOVE GENERATOR, ADJUSTING BAR AND BRACKET

(a) Disconnect the generator connector.
(b) Remove the nut, and disconnect the generator wire and wire clip.
(c) Remove the lock, pivot bolts and the generator.

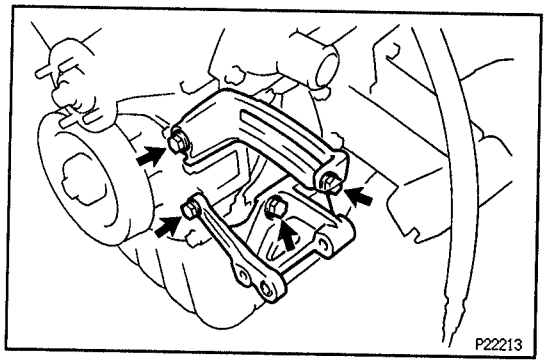

(d) Remove the bolt and adjusting bar.
(e) Remove the 3 bolts and generator bracket.

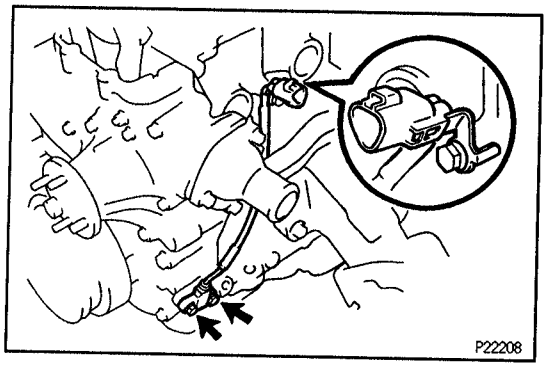

8. REMOVE CRANKSHAFT POSITION SENSOR

(a) Remove the 2 bolts and crankshaft position sensor.
(b) Remove the O – ring from the crankshaft position sensor.

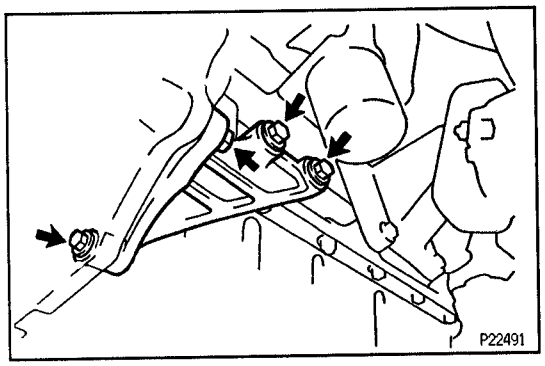

9. 2WD:
REMOVE STIFFENER PLATES
Remove the 8 bolts and stiffener plates.

10. REMOVE FLYWHEEL HOUSING UNDER COVER AND DUST SEAL

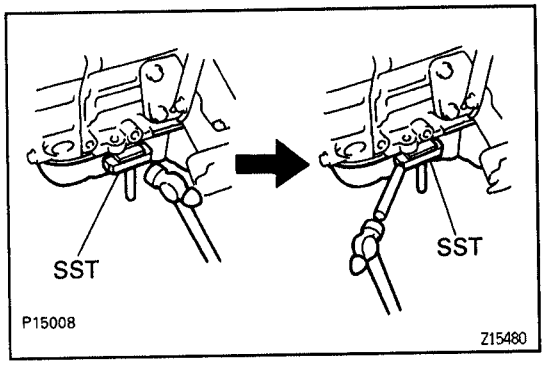

11. REMOVE OIL PAN
(a) Remove the 16 bolts and 2 nuts.
(b) Insert the blade of SST between the cylinder block and oil pan, cut off applied sealer and remove the oil pan.
SST 09032–00100
NOTICE: Be careful not to damage the oil pan flanges of the oil pan and cylinder block.

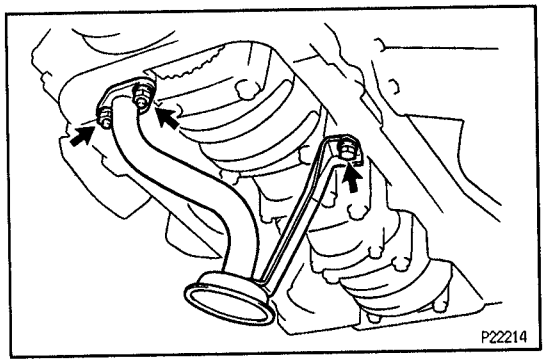

12. REMOVE OIL STRAINER
Remove the bolt, 2 nuts, oil strainer and gasket.

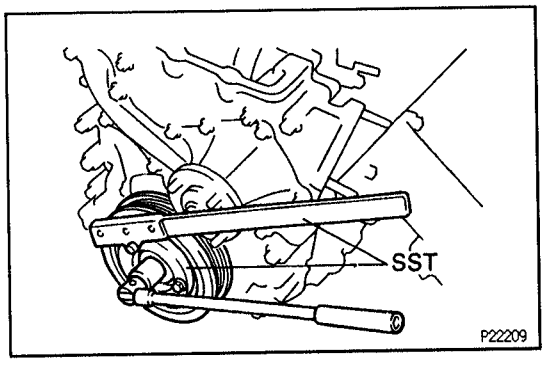

13. REMOVE CRANKSHAFT PULLEY
(a) w/ A/C:
Remove the 4 bolts, No.2 and No.3 crankshaft pulleys.
(b) Using SST, remove the pulley bolt.
SST 09213–54015, 09330–00021
(c) Remove the crankshaft pulley.

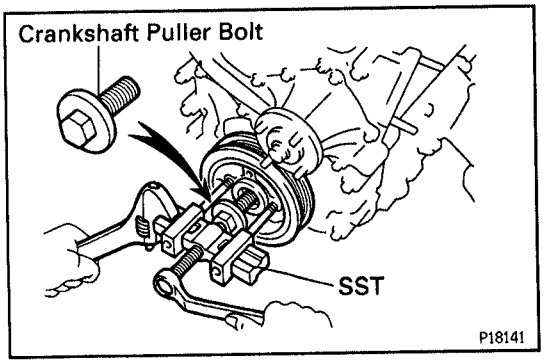

HINT: If necessary, remove the pulley with SST and crankshaft pulley bolt.
SST 09950–50010 (09951–05010, 09952–05010, 09953–05010, 09954–05020)

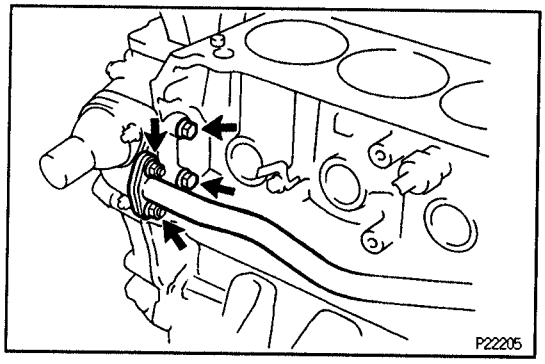

14. REMOVE TIMING CHAIN COVER

(a) Remove the 2 water bypass pipe nuts.
(b) Remove the 2 timing chain cover bolts.

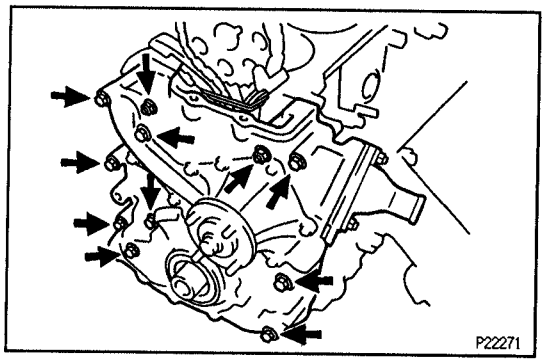

(c) Remove the 9 bolts and 2 nuts.
(d) Using a plastic faced hammer, loosen the chain cover and remove the timing chain cover and 3 gasket.

No.1 Timing Chain

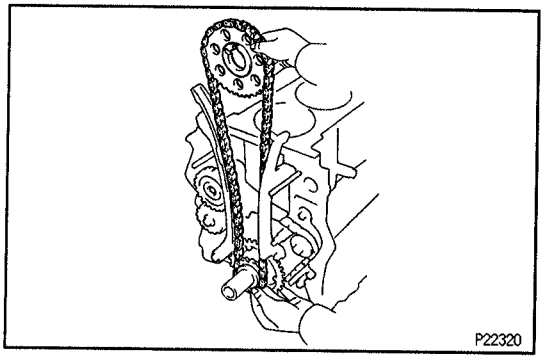

15. REMOVE NO.1 TIMING CHAIN AND CAMSHAFT TIMING GEAR

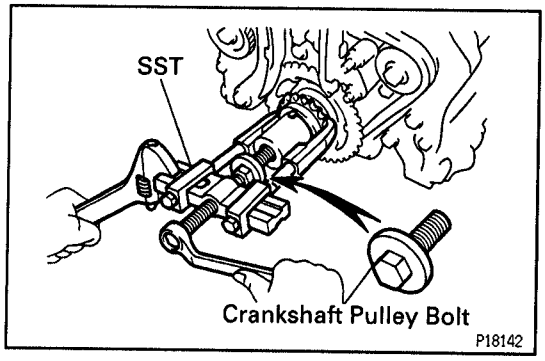

16. REMOVE CRANKSHAFT TIMING GEAR

HINT: If necessary, remove the gear with SST and crankshaft pulley bolt.
SST 09950–40010 (09951–04010, 09952–04010, 09953–04010, 09954–04010, 09955–04060)

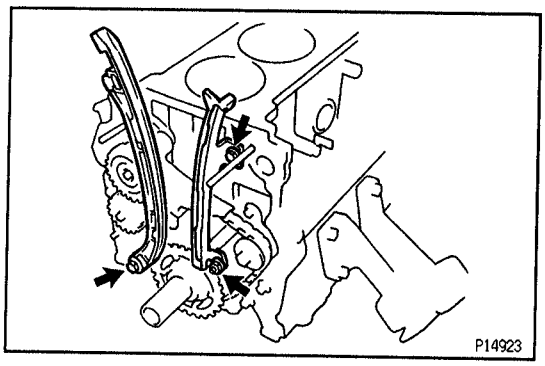

17. REMOVE NO.1 TIMING CHAIN TENSIONER SLIPPER AND NO.1 VIBRATION DAMPER

(a) Remove the bolt and slipper.
(b) 2RZ–FE:
Remove the 2 bolts and No.1 damper.
(c) 3RZ–FE:
Remove the bolt, nut and No.1 damper.

18. 2RZ–FE:
REMOVE CRANKSHAFT POSITION SENSOR ROTOR

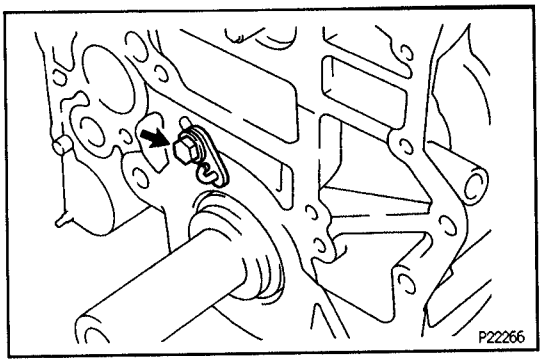

19. 2RZ–FE:
REMOVE TIMING CHAIN OIL JET
Remove the bolt, oil jet and gasket.

No.2 Timing Chain (3RZ–FE)

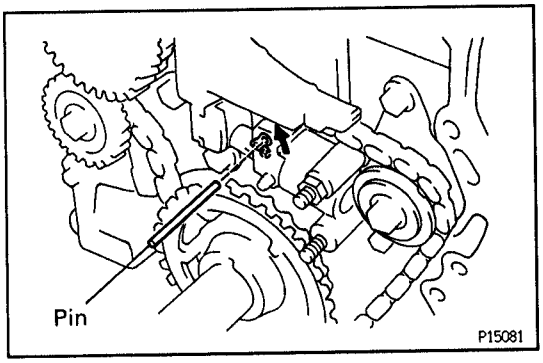

20. REMOVE NO.2, NO.3 VIBRATION DAMPERS AND NO.2 CHAIN TENSIONER
(a) Install a pin to the No.2 chain tensioner and lock the plunger.

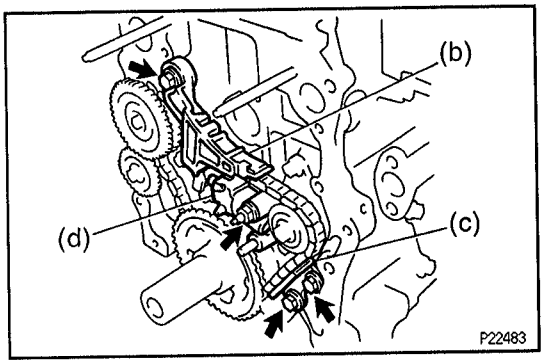

(b) Remove the bolt and No.2 damper.
(c) Remove the 2 bolts and No.3 damper.
(d) Remove the nut and No.2 chain tensioner.

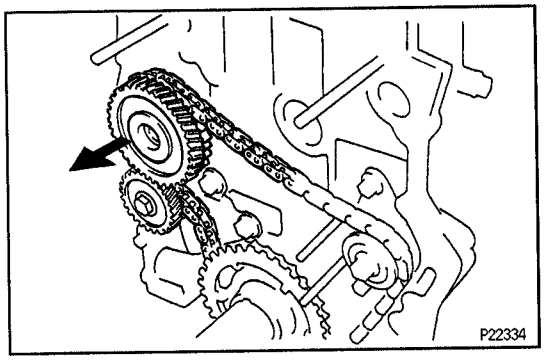

21. REMOVE BALANCE SHAFT DRIVE GEAR, SHAFT, NO. 2 TIMING CHAIN AND NO. 2 CRANKSHAFT TIMING SPROCKET
(a) Remove the bolt from the balance shaft drive gear.
(b) Remove the balance shaft drive gear with the shaft.
(c) Remove the No.2 timing chain with the No.2 crankshaft timing sprocket.

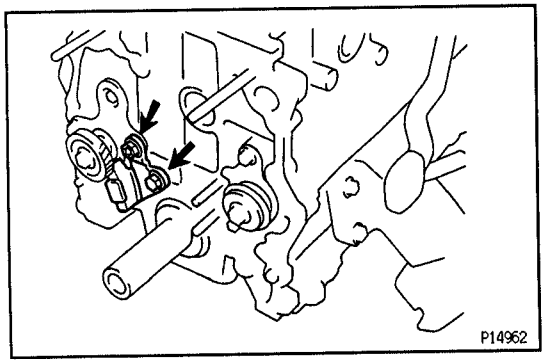

22. REMOVE NO.4 VIBRATION DAMPER
Remove the 2 bolts and No.4 damper.

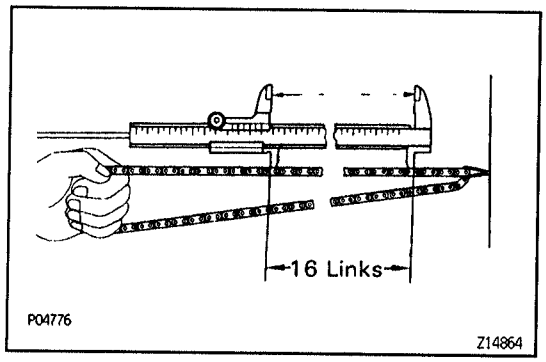

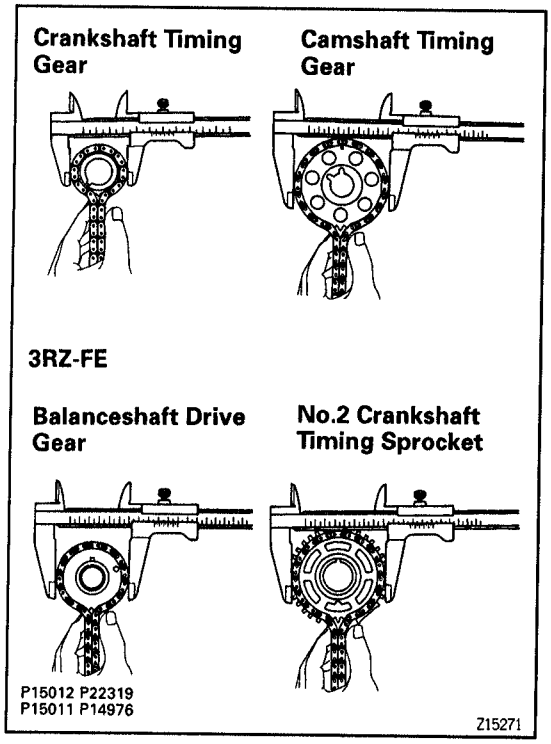

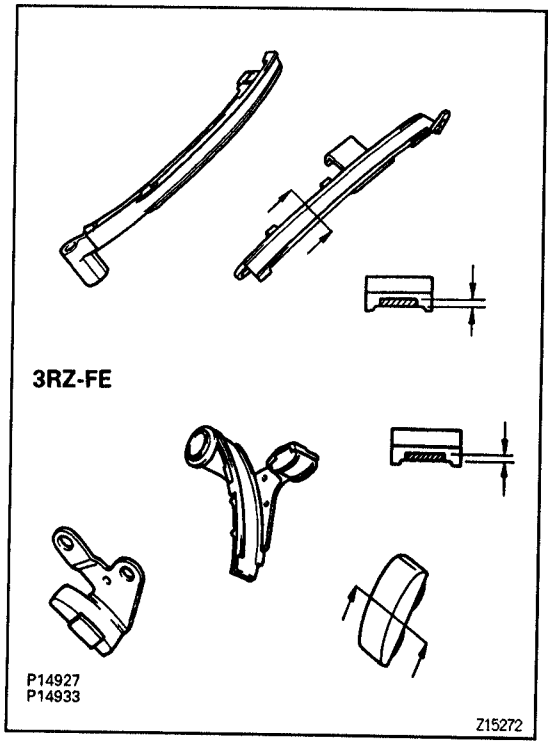

TIMING CHAIN COMPONENTS INSPECTION

EG3K8–05

1. INSPECT TIMING CHAINS, TIMING GEARS AND TIMING SPROCKETS

(a) Measure the length of 16 links with the chain fully stretched.

Maximum chain elongation:

No.1 Timing chain

147.5 mm (5.807 in.)

3RZ–FE:

No.2 Timing chain

123.6 mm (4.866 in.)

If the elongation is greater than maximum, replace the chain.

HINT: Make the same measurements pulling at 3 or more places selected at random.

(b) Wrap the chain around the timing gear and timing sprocket.

(c) Using vernier calipers, measure the timing gear and timing sprocket diameter with the chain.

NOTICE: Vernier calipers must contact the chain rollers for measuring.

Minimum gear diameter (w/ chain):

Camshaft

113.8 mm (4.480 in.)

Crankshaft

59.4 mm (2.339 in.)

3RZ–FE:

Balance shaft

75.9 mm (2.988 in.)

Minimum sprocket diameter (w/ chain):

3RZ–FE:

No.2 crankshaft

96.7 mm (3.807 in.)

If the diameter is less than minimum, replace the chain, gears and sprocket.

2. INSPECT CHAIN TENSIONER SLIPPER AND VIBRATION DAMPERS

Measure the chain tensioner slipper and vibration damper wears.

Maximum wear:

1.0 mm (0.039 in.)

If the wear is greater than maximum, replace the slipper and/or dampers.

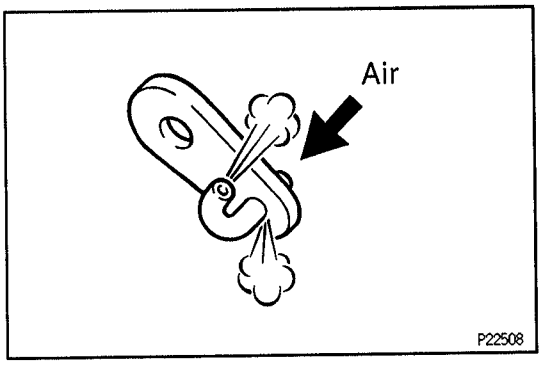

3. **2RZ–FE:**
INSPECT OIL JET
Check the oil for damage or clogging.
If necessary, replace the oil jet.

EG

4. **INSPECT NO.1 CHAIN TENSIONER**
(See step 15 in cylinder head components, inspection, cleaning and repair in cylinder head)

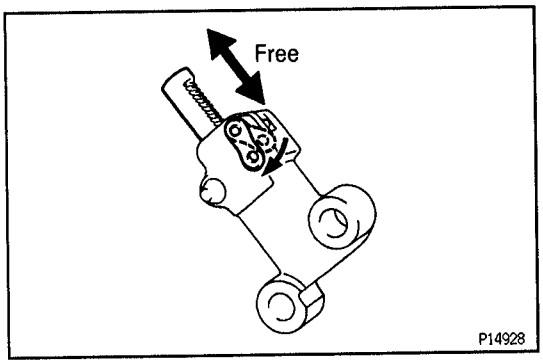

5. **3RZ–FE:**
INSPECT NO.2 CHAIN TENSIONER

A. Inspect chain tensioner

(a) Check that the plunger moves smoothly when the ratchet pawl is raised with your finger.

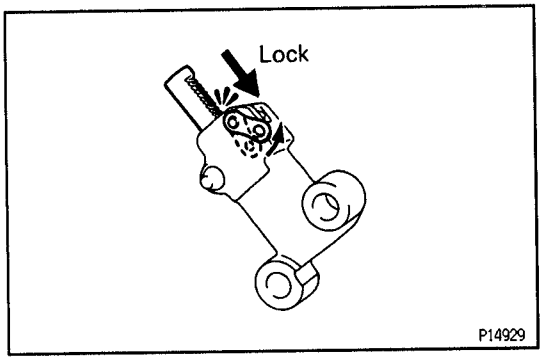

(b) Release the ratchet pawl and check that the plunger is locked in place by the ratchet pawl and does not move when pushed with your finger.

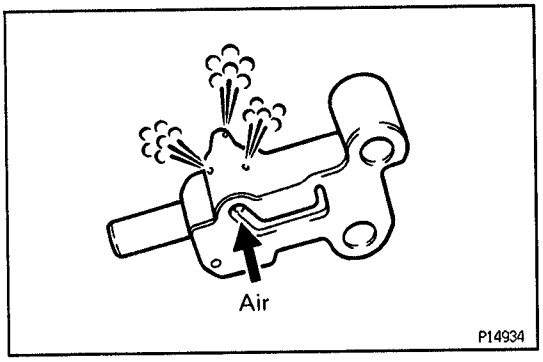

B. Inspect oil jet (No.2 chain tensioner).
Check the oil jet for damage or clogging.
If necessary, replace the oil jet (No.2 chain tensioner).

EG

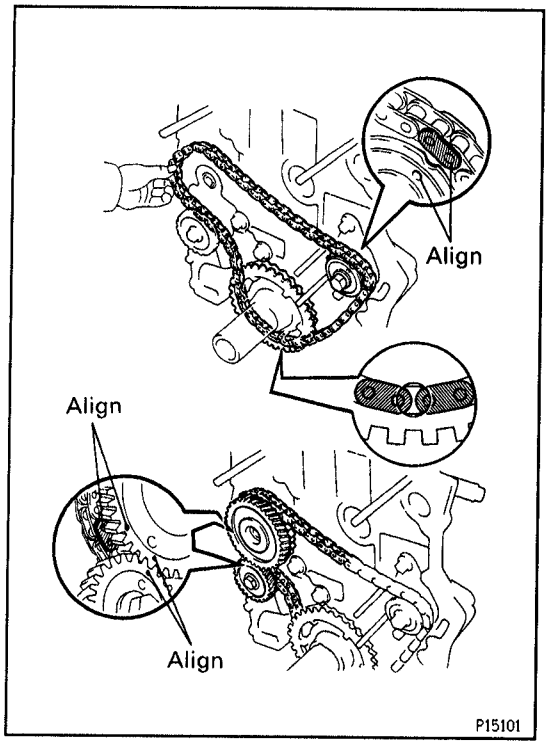

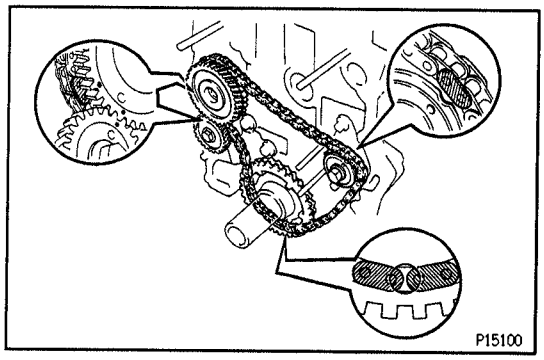

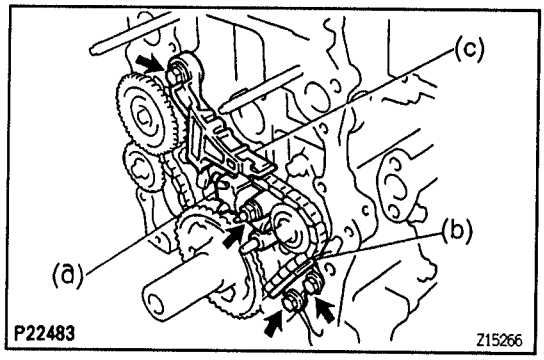

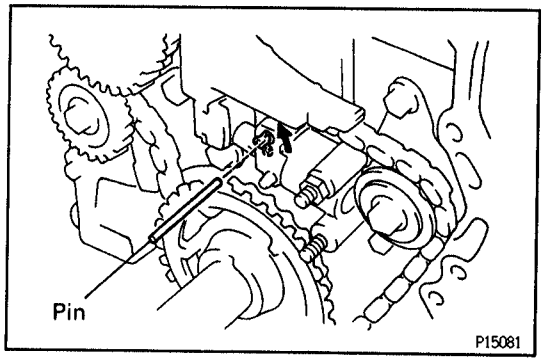

TIMING CHAIN INSTALLATION

EG5MM–02

No.2 Timing Chain (3RZ–FE)

NOTICE: Check that No.1 cylinder is at TDC and that the weights of the No.1 and No.2 balance shafts are at the bottom side.

1. **INSTALL NO.4 VIBRATION DAMPER**

Install the No.4 damper with the 2 bolts.

2. **INSTALL NO.2 TIMING CHAIN, NO.2 CRANKSHAFT TIMING SPROCKET, BALANCE SHAFT DRIVE GEAR AND SHAFT**

(a) Install the No.2 timing chain by matching its mark links with the timing marks on the No.2 crankshaft timing sprocket and balance shaft timing sprocket.

(b) Fit the other mark link of No.2 timing chain onto the sprocket behind the large timing mark of the balance shaft drive gear.

(c) Insert the balance shaft drive gear shaft through the balance shaft drive gear so that it fits into the thrust plate hole.
Then align the small timing mark of the balance shaft drive gear with the timing mark of the balance shaft timing gear.

(d) Install the bolt to the balance shaft drive gear and tighten it.
Torque: 25 N·m (250 kgf·cm, 18 ft·lbf)

(e) Check that each timing mark is matched with the corresponding mark link.

3. **INSTALL NO.2, NO.3 VIBRATION DAMPERS AND NO.2 CHAIN TENSIONER**

NOTICE: Assemble the chain tensioner with the pin installed, then remove the pin after assembly. When doing this, avoid pushing the No.2 vibration damper against the chain.

(a) Install the No.2 chain tensioner with the nut.
Torque: 18 N·m (185 kgf·cm, 13 ft·lbf)

(b) Install No.3 damper with the 2 bolts.
Torque: 18 N·m (185 kgf·cm, 13 ft·lbf)

(c) Install No.2 damper with the bolt.
Torque: 27 N·m (270 kgf·cm, 20 ft·lbf)

(d) Remove a pin from the No.2 chain tensioner and free the plunger.

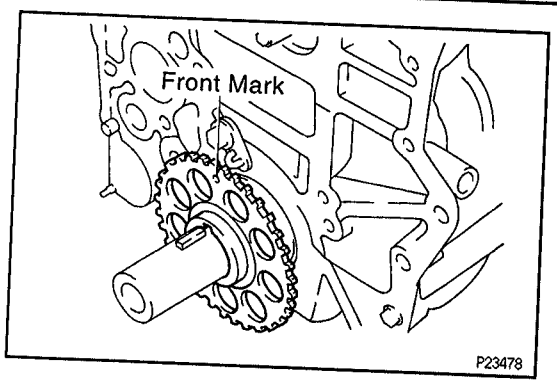

No.1 Timing Chain

4. **2RZ–FE:**
INSTALL OIL JET
Install a new gasket and the oil jet with the bolt.
Torque: 18 N·m (185 kgf·cm, 13 ft·lbf)

5. **2RZ–FE:**
INSTALL CRANKSHAFT POSITION SENSOR ROTOR
Install the rotor to the crankshaft with the front mark (cavity) of the rotor facing forward.

6. **INSTALL NO.1 TIMING CHAIN TENSIONER SLIPPER AND NO.1 VIBRATION DAMPER**
(a) Install the No.1 damper with the bolt and nut.
Torque: 29 N·m (300 kgf·cm, 22 ft·lbf)
(b) Install the slipper with the bolt.
Torque: 27 N·m (270 kgf·cm, 20 ft·lbf)
(c) Check that the slipper moves smoothly.

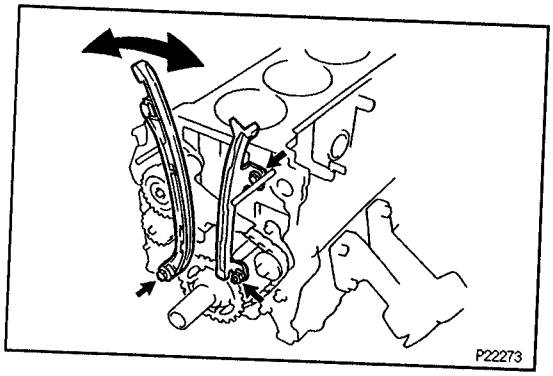

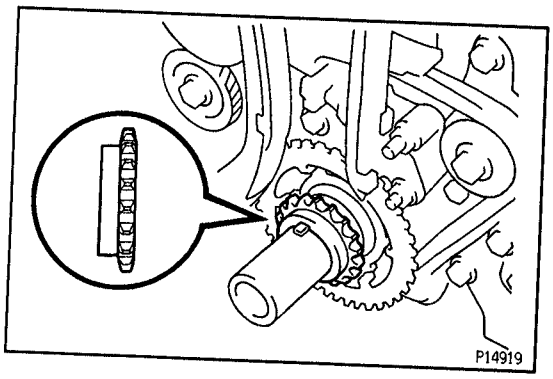

7. **INSTALL CRANKSHAFT TIMING GEAR**

HINT: If necessary, install the gear with SST.
SST 09636–20010

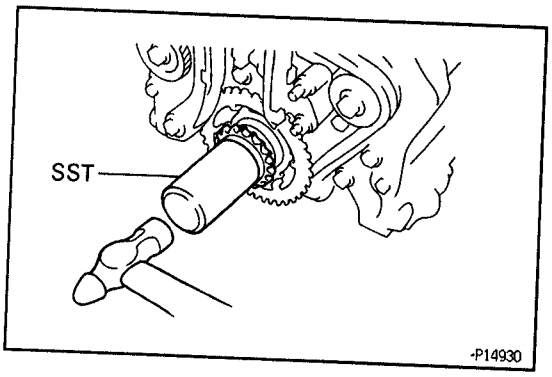

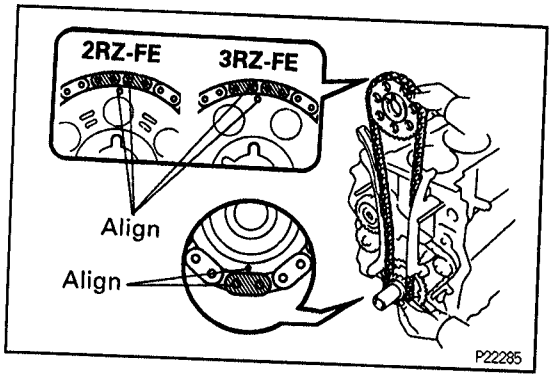

8. **INSTALL NO.1 TIMING CHAIN AND CAMSHAFT TIMING GEAR**
(a) Align the timing mark between the mark link of the No.1 timing chain, and install the No.1 timing chain to the timing gear.
(b) Align the timing mark of the crankshaft timing gear with the mark link of the No.1 timing chain and install the No.1 timing chain.

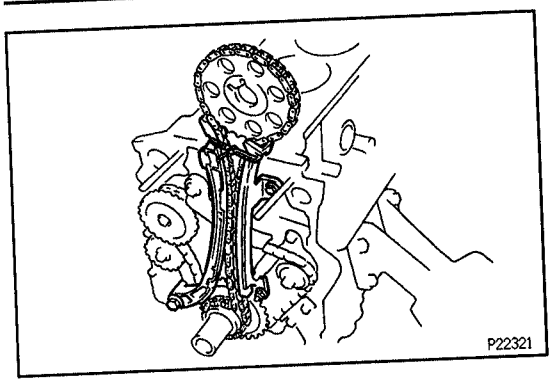

(c) Tie the No.1 timing chain with a cord as shown in the illustration, and make sure it doesn't come loose.

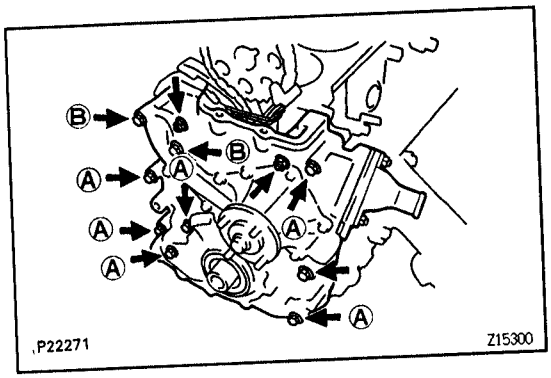

9. INSTALL TIMING CHAIN COVER

(a) Install 3 new gaskets to the cylinder block and water bypass pipe.

(b) Install the timing chain cover with the 9 bolts and 2 nuts.

Torque:

Bolt:

12 mm head Ⓐ: 20 N·m (200 kgf·cm, 14 ft·lbf)

12 mm head Ⓑ: 24.5 N·m (250 kgf·cm, 18 ft·lbf)

14 mm head: 44 N·m (440 kgf·cm, 32 ft·lbf)

Nut : 20 N·m (200 kgf·cm, 14 ft·lbf)

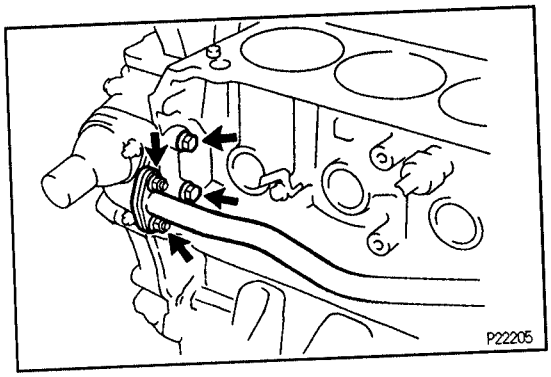

(c) Install the 2 timing chain cover bolts.
Torque: 18 N·m (185 kgf·cm, 13 ft·lbf)

(d) Install the 2 water bypass pipe nuts.
Torque: 20 N·m (200 kgf·cm, 14 ft·lbf)

(e) Remove the cord from the chain.

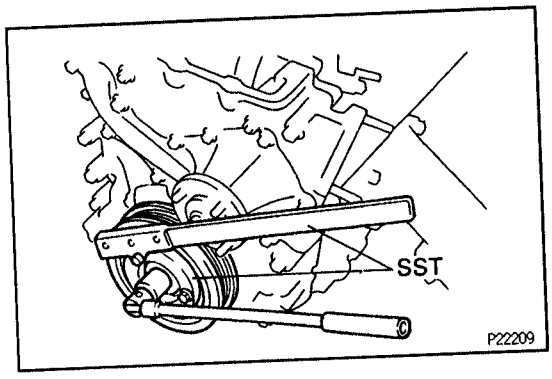

10. INSTALL CRANKSHAFT PULLEY

(a) Align the pulley set key with the key groove of the pulley, and slide on the pulley.

(b) Using SST, install and torque the pulley bolt.
SST 09213–54015, 09330–00021
Torque: 260 N·m (2,650 kgf·cm, 193 ft·lbf)

(c) w/ A/C:
Install the No.3 and No.2 crankshaft pulleys with the 4 bolts.
Torque: 25 N·m (250 kgf·cm, 18 ft·lbf)

11. INSTALL OIL STRAINER

Install a new gasket and the oil strainer with the bolt and 2 nuts.
Torque: 18 N·m (185 kgf·cm, 13 ft·lbf)

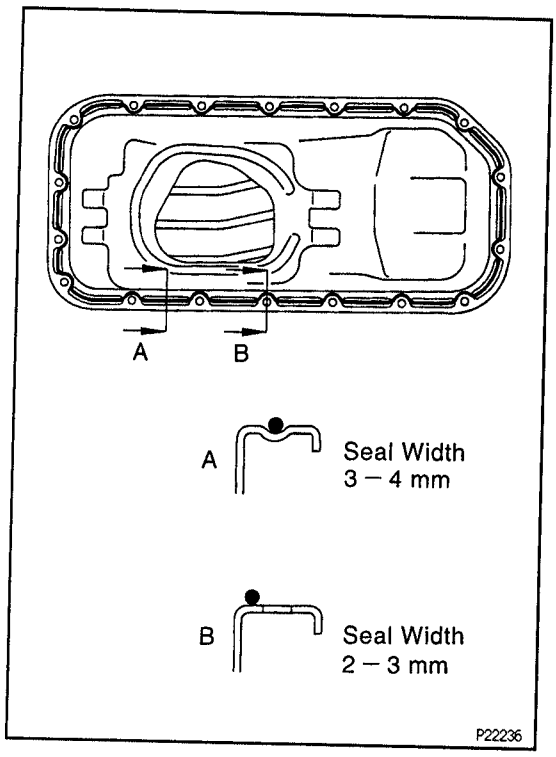

12. INSTALL OIL PAN

(a) Remove any old packing (FIPG) material and be careful not to drop any oil on the contact surface of the oil pan.

- Using a razor blade and gasket scraper, remove all the old packing (FIPG) material from the gasket surfaces and sealing grooves.
- Thoroughly clean all components to remove all the loose material.
- Using a non–residue solvent, clean both sealing surfaces.

NOTICE: Do not use a solvent which will affect the painted surfaces.

(b) Apply seal packing to the oil pan as shown in the illustration.

Seal packing:

Part No. 08826–00080 or equivalent

- Install a nozzle that has been cut to a 2 – 3 mm (0.08 – 0.12 in.)opening or 3 – 4 mm (0.012 – 0.016 in.) opening.

HINT: Avoid applying an excessive amount to the surface.

- Parts must be assembled within 5 minutes of application. Otherwise the material must be removed and reapplied.
- Immediately remove nozzle from the tube and reinstall cap.

(c) Install the oil pan with the 16 bolts and 2 nuts.

Torque: 12.5 N·m (130 kgf·cm, 9 ft·lbf)

13. INSTALL FLYWHEEL HOUSING UNDER COVER AND DUST SEAL

14. 2WD: INSTALL STIFFENER PLATES

Torque: 37 N·m (380 kgf·cm, 27 ft·lbf)

15. INSTALL CRANKSHAFT POSITION SENSOR

Install a new O–ring.

Torque: 8.5 N·m (85 kgf·cm, 74 in.·lbf)

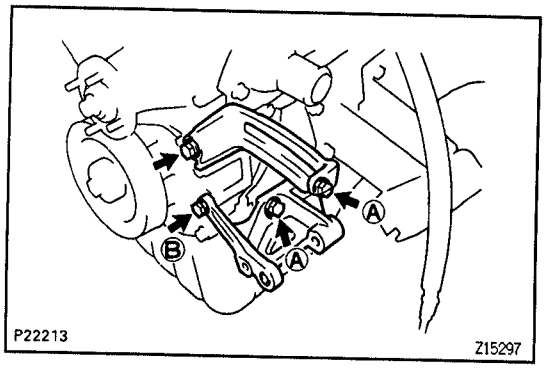

16. INSTALL GENERATOR, ADJUSTING BAR AND BRACKET

(a) Install the bracket with the 3 bolts.

Torque:

Bolt Ⓐ: 74.5 N·m (760 kgf·cm, 55 ft·lbf)

Bolt Ⓑ: 18 N·m (185 kgf·cm, 13 ft·lbf)

(b) Install the adjusting bar with the bolt.

Torque: 63.5 N·m (650 kgf·cm, 47 ft·lbf)

(c) Install the generator with the pivot bolt and lock bolt.

17. **w/ A/C:**
    INSTALL A/C COMPRESSOR AND BRACKET
    (a) Install the A/C compressor bracket with the 4 bolts.
    Torque: 44 N·m (440 kgf·cm, 32 ft·lbf)
    (b) Install the A/C compressor with the 4 bolts.
    Torque: 25 N·m (250 kgf·cm, 18 ft·lbf)
18. **INSTALL CYLINDER HEAD ASSEMBLY**
    (See cylinder head installation)
19. **INSTALL WATER PUMP PULLEY, FAN WITH FLUID COUPLING AND DRIVE BELT FOR GENERATOR**
20. **4WD:**
    INSTALL FRONT DIFFERENTIAL AND DRIVE SHAFTS ASSEMBLY
21. **FILL WITH ENGINE OIL**
22. **START ENGINE AND CHECK FOR LEAKS**
23. **INSTALL ENGINE UNDER COVER**
24. **VEHICLE ROAD TEST**
    Check for abnormal noise, shock slippage, correct shift points and smooth operation.
25. **RECHECK ENGINE COOLANT AND ENGINE OIL LEVEL**

CYLINDER BLOCK

EG1K1–0A

2WD:
COMPONENTS FOR REMOVAL AND INSTALLATION

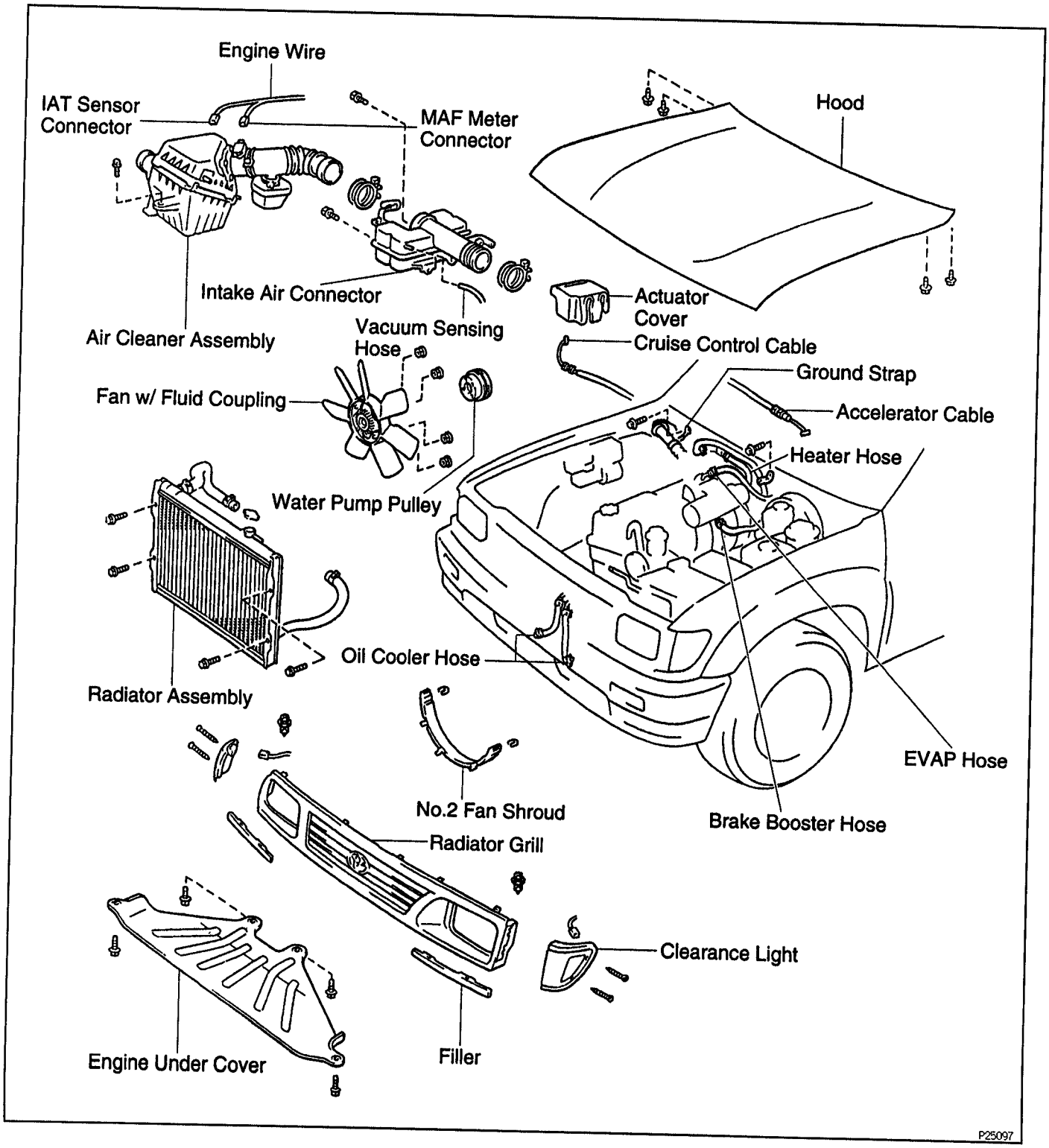

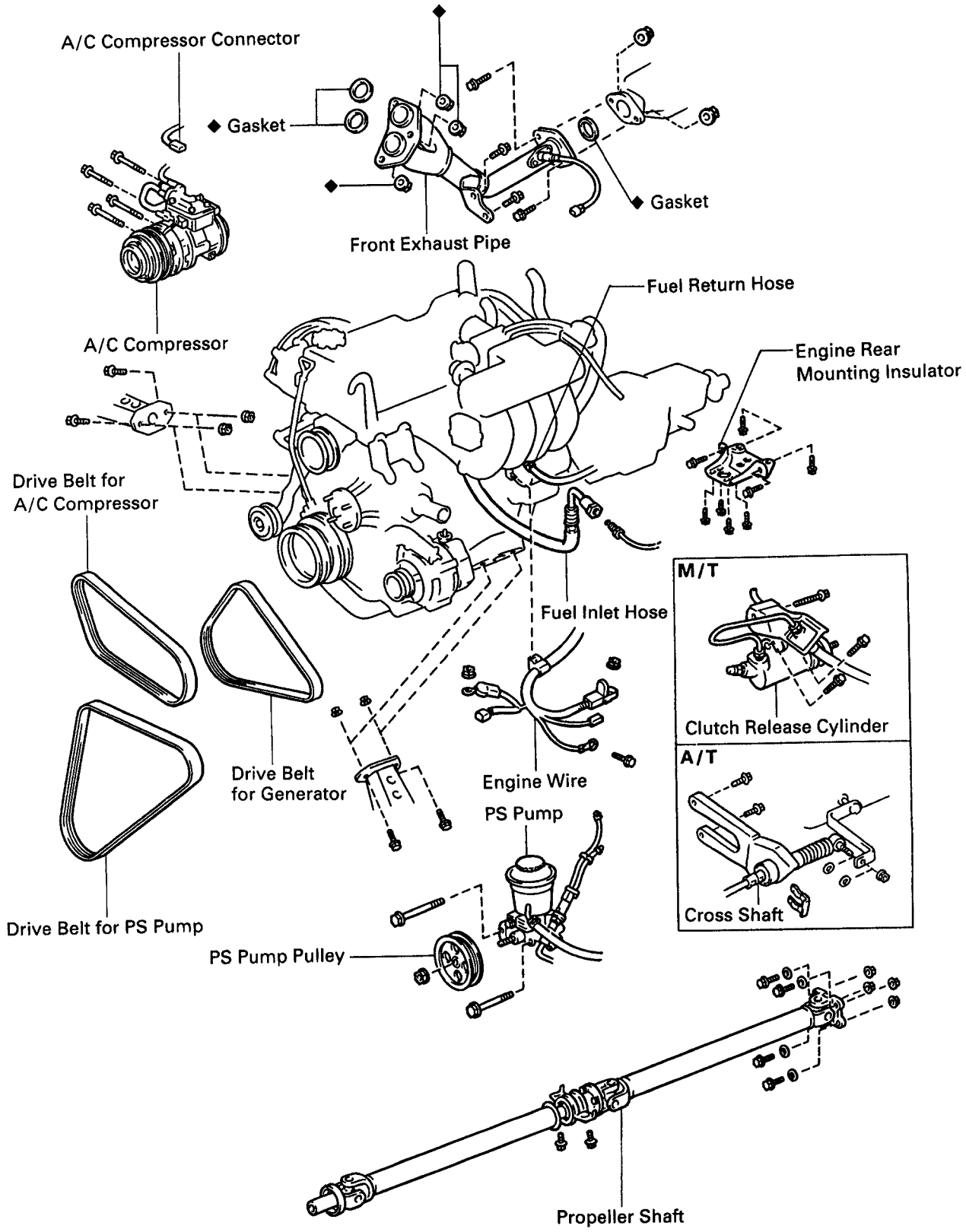

◆ Non-reusable part

P22489

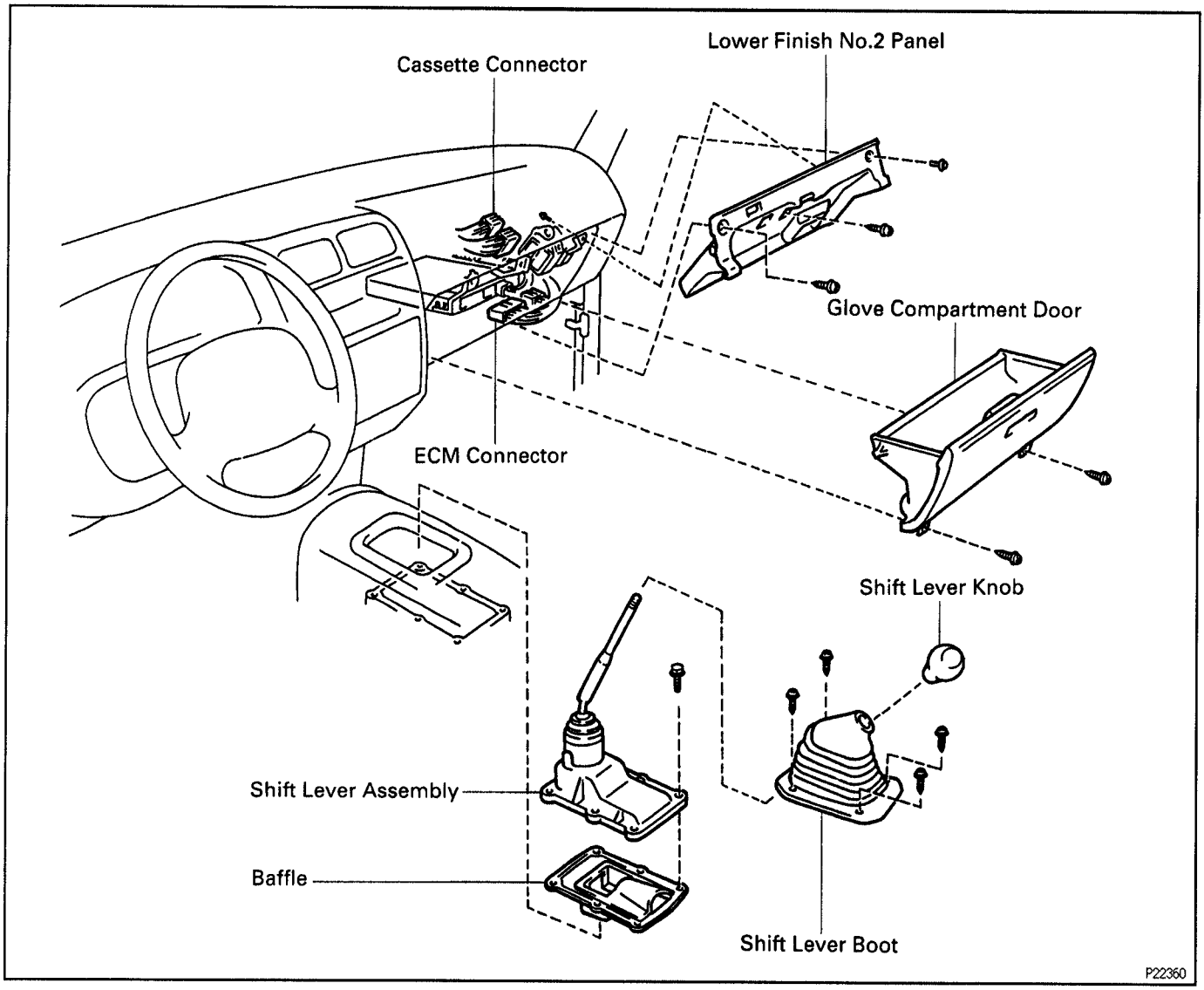

ENGINE WITH TRANSMISSION REMOVAL EG64H–01

1. **REMOVE ENGINE UNDER COVER**
2. **DRAIN ENGINE COOLANT**
3. **DRAIN ENGINE OIL**
4. **DRAIN TRANSMISSION OIL**
5. **REMOVE HOOD**
6. **REMOVE RADIATOR**
   (See radiator removal in Cooling System)
7. **REMOVE DRIVE BELT FOR GENERATOR, FAN WITH FLUID COUPLING AND WATER PUMP PULLEY (See steps 6, 8 and 9 in water pump removal in Cooling System)**
8. **DISCONNECT THESE CABLES:**

(a) Disconnect the accelerator cable from the throttle body.

(b) w/ Cruise Control System:
Remove the actuator cover, and disconnect the cruise control cable from the actuator.

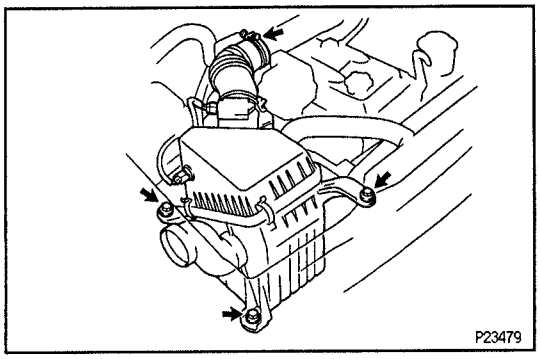

9. REMOVE AIR CLEANER ASSEMBLY

(a) Disconnect the IAT sensor and MAF meter connectors.
(b) Disconnect the 3 wire clamps and engine wire.
(c) Loosen the air cleaner hose clamp.
(d) Remove the 3 bolts and the MAF meter, resonator and air cleaner assembly.

10. REMOVE INTAKE AIR CONNECTOR

(See step 4 in cylinder head removal)

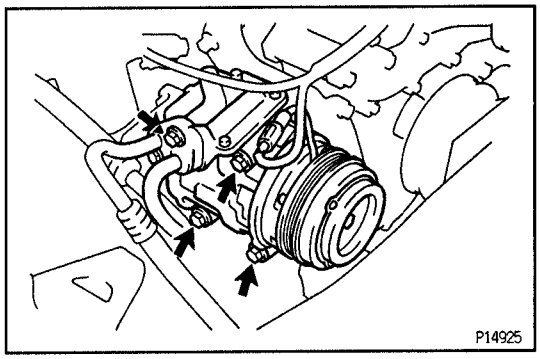

11. w/A/C:
DISCONNECT A/C COMPRESSOR

(a) Loosen the idler pulley nut and adjusting bolt, and remove the drive belt.
(b) Disconnect the A/C compressor connector.
(c) Remove the 4 bolts, and disconnect the compressor from the bracket.
HINT: Put aside the compressor, and suspend it.

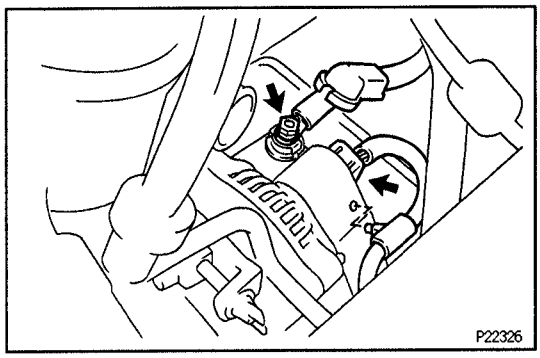

12. REMOVE GENERATOR WIRE

(a) Disconnect the generator connector.
(b) Remove the nut, and disconnect the generator wire and wire clip.

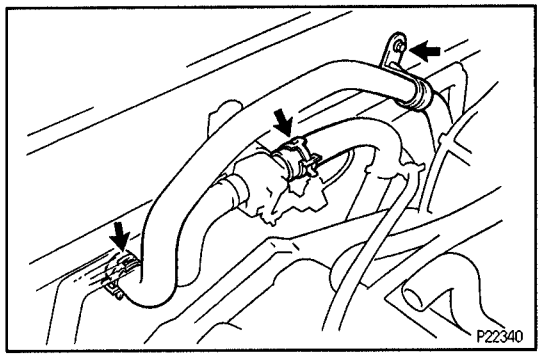

13. DISCONNECT HEATER HOSES

(a) Remove the bolt and hose clamp.
(b) Disconnect the heater hoses.

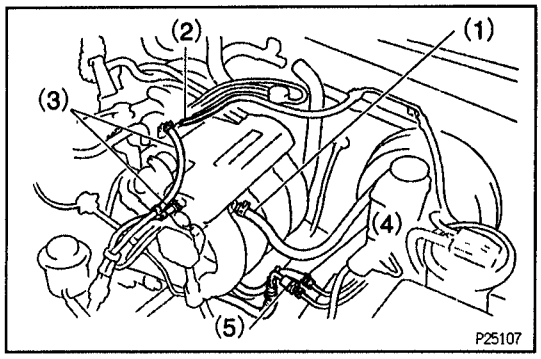

14. DISCONNECT HOSES

Disconnect these hoses:
(1) Brake booster vacuum hose
(2) EVAP hose
(3) w/ PS:
2 air hoses for PS idle–up
(4) Fuel return hose
(5) Fuel inlet hose

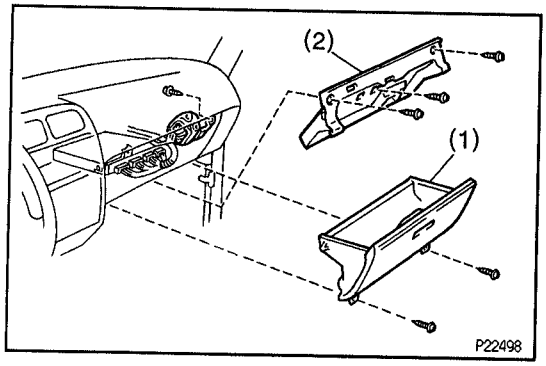

15. w/ PS:
DISCONNECT PS PUMP FROM ENGINE
(See step 8 in cylinder head removal)

16. DISCONNECT ENGINE WIRE FROM CABIN

(a) Remove these parts:
(1) Glove compartment door
(2) Lower finish No.2 panel

(b) Disconnect the 2 ECM connectors.

(c) Disconnect the 2 cassette connectors (cowl wire x engine wire) and 2 wire clamps from the lower finish panel.

(d) Disconnect these connector grand strap and clamps:
(1) Igniter connector
(2) Ground strap from cowl top panel
(3) 2 engine wire clamps

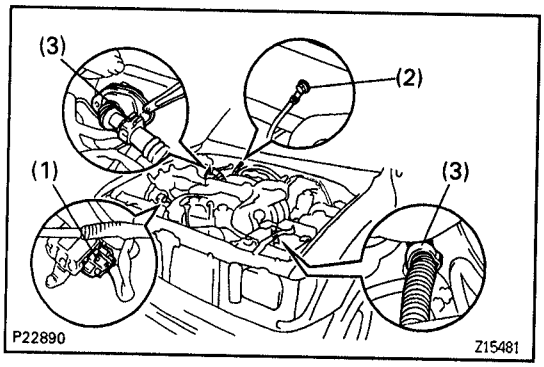

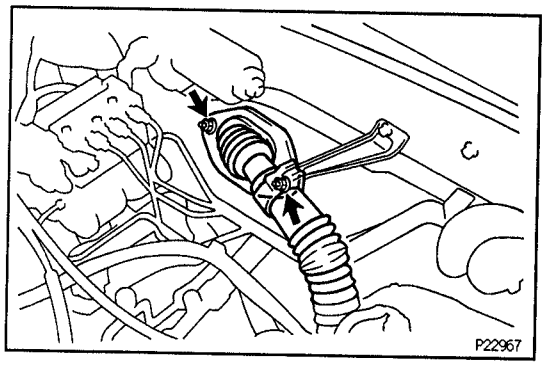

(e) Remove 2 nuts holding the engine wire retainer to the cowl panel and pull out the engine wire from the cabin.

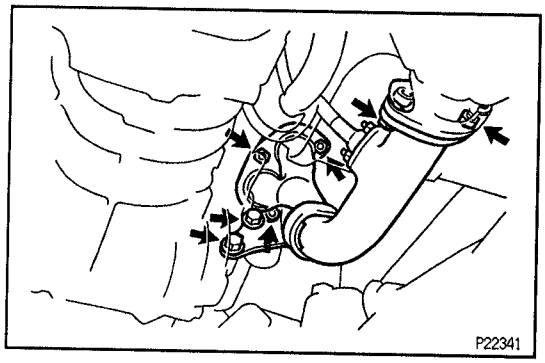

17. REMOVE FRONT EXHAUST PIPE

(a) Disconnect the heated oxygen sensor connector.

(b) Remove the 2 bolts holding the front exhaust pipe to the TWC.

(c) Remove the 2 bolts holding the support bracket to the transmission.

(d) Remove the 3 nuts, front exhaust pipe and 3 gaskets.

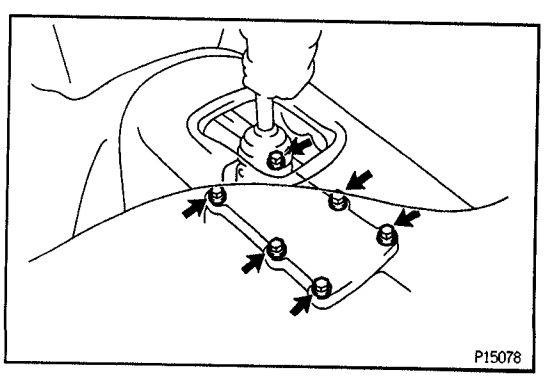

18. M/T:
REMOVE SHIFT LEVER ASSEMBLY

(a) Remove the shift lever knob.

(b) Remove the 4 screws and shift lever boot.

(c) Remove the 6 bolts, shift lever assembly and baffle.
NOTICE: Do not lose the washers.

19. REMOVE PROPELLER SHAFT
(See propeller shaft removal in Propeller Shaft)

20. DISCONNECT SPEEDOMETER CABLE
NOTICE: Do not lose the felt protector and washers.

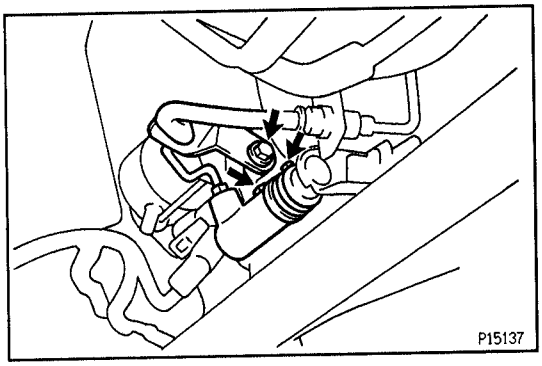

21. M/T:
REMOVE CLUTCH RELEASE CYLINDER

(a) Remove the 2 bolts, and disconnect the clutch release cylinder from the clutch housing.

(b) Remove the bolt and disconnect the clutch line.

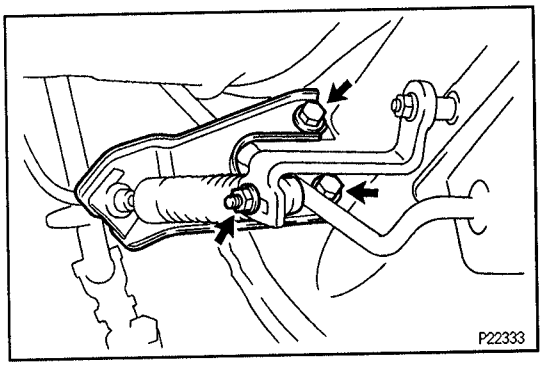

22. A/T:
REMOVE CROSS SHAFT

Remove the 2 bolts and nut, and disconnect bracket from the transmission.

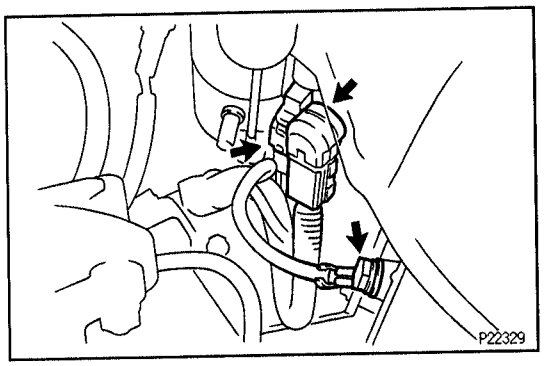

23. DISCONNECT STARTER WIRE

(a) Remove the nut and disconnect the starter wire.

(b) Disconnect the starter connector.

(c) Remove the bolt and disconnect ground strap.

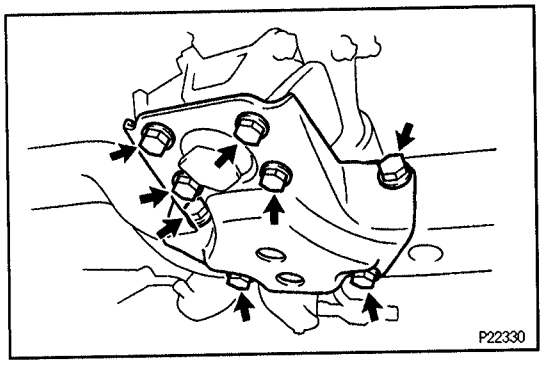

24. PLACE JACK UNDER TRANSMISSION

25. REMOVE ENGINE REAR MOUNTING BRACKET

Remove the 8 bolts holding the mounting bracket to the mounting insulator and cross member.

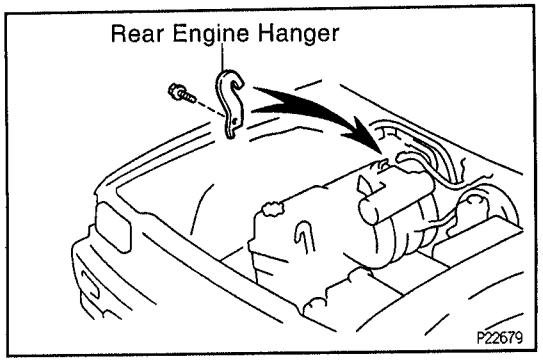

26. REMOVE ENGINE WITH TRANSMISSION

(a) Install a rear engine hanger in the correct direction.
Part No.:
HANGER, ENGINE, NO.2 12282–75020
BOLT 91512–61020
Torque: 42 N·m (420 kgf·cm, 30 ft·lbf)

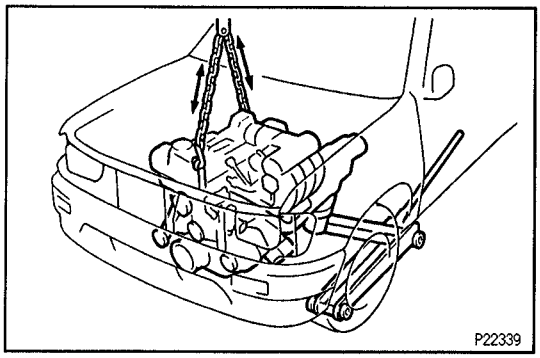

(b) Attach the engine hoist chain to the 2 engine hangers.

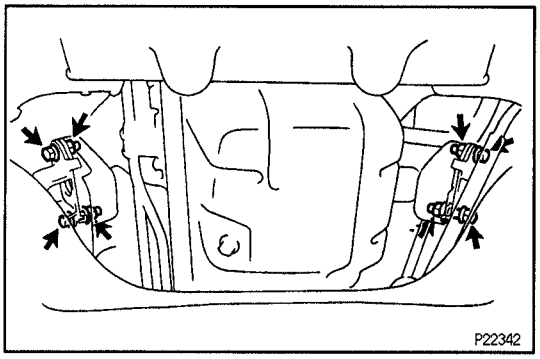

(c) Remove the 4 bolts and nuts holding the engine front mounting insulators to the frame.

(d) Lift the engine with transmission out of the vehicle slowly and carefully.

NOTICE: Make sure the engine is clear of all wiring and hoses.

(e) Place the engine and transmission assembly onto the stand.

EG5MP–02

COMPONENTS FOR ENGINE AND TRANSMISSION SEPARATION (2WD)

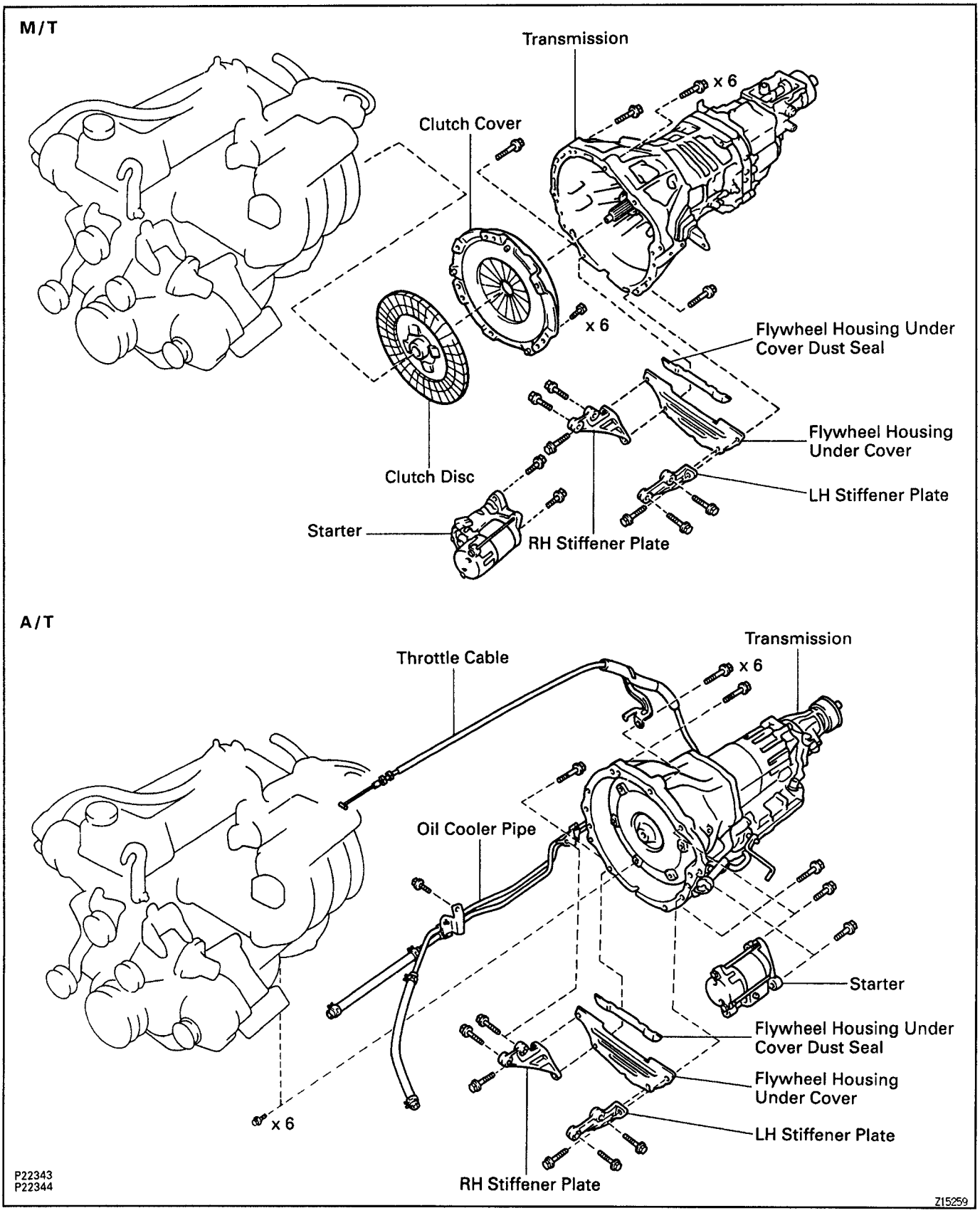

EG5MQ–02

4WD:
TRANSMISSION REMOVAL
(See M/T or A/T section)

EG64J–01

COMPONENTS FOR REMOVAL AND INSTALLATION

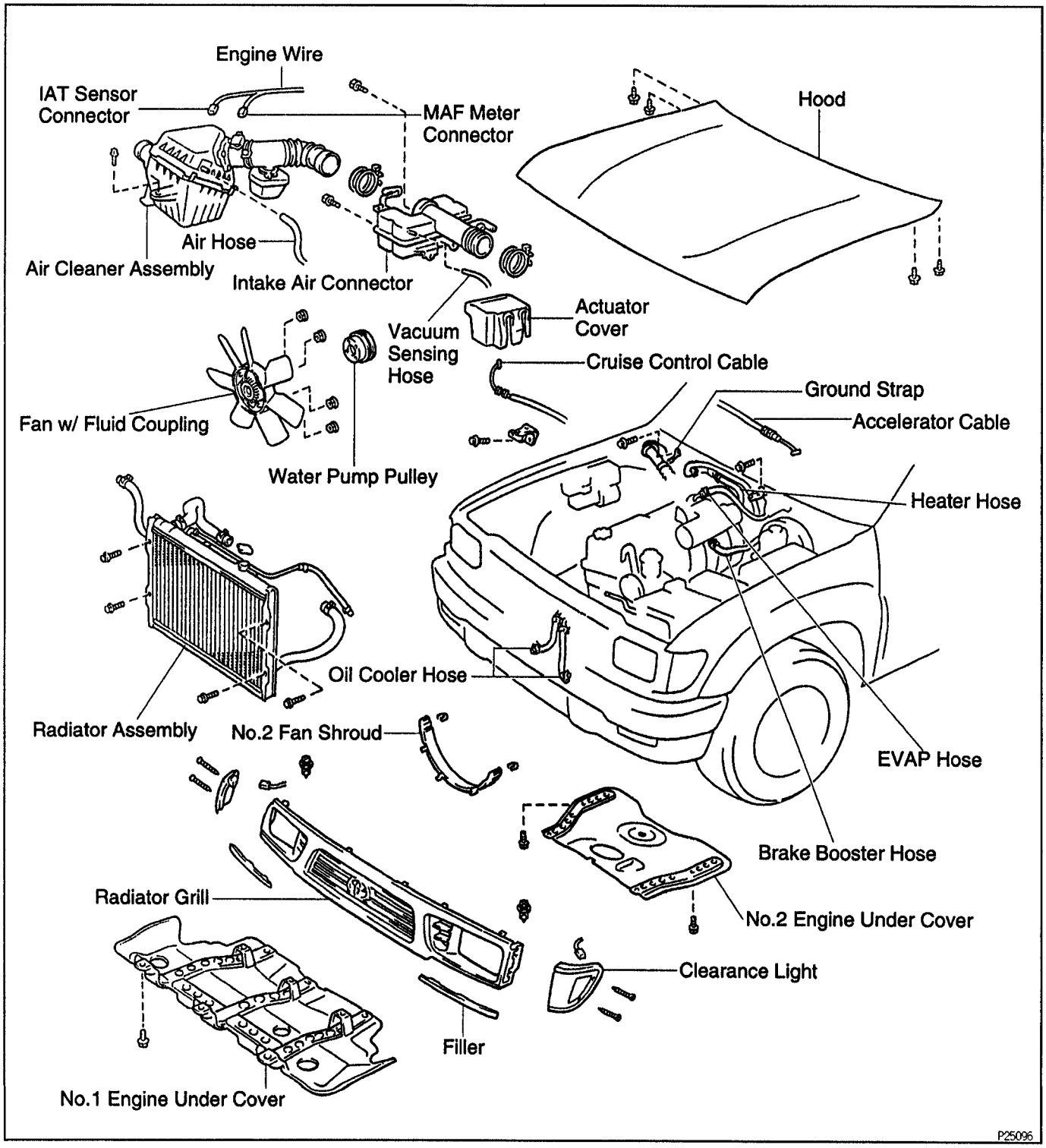

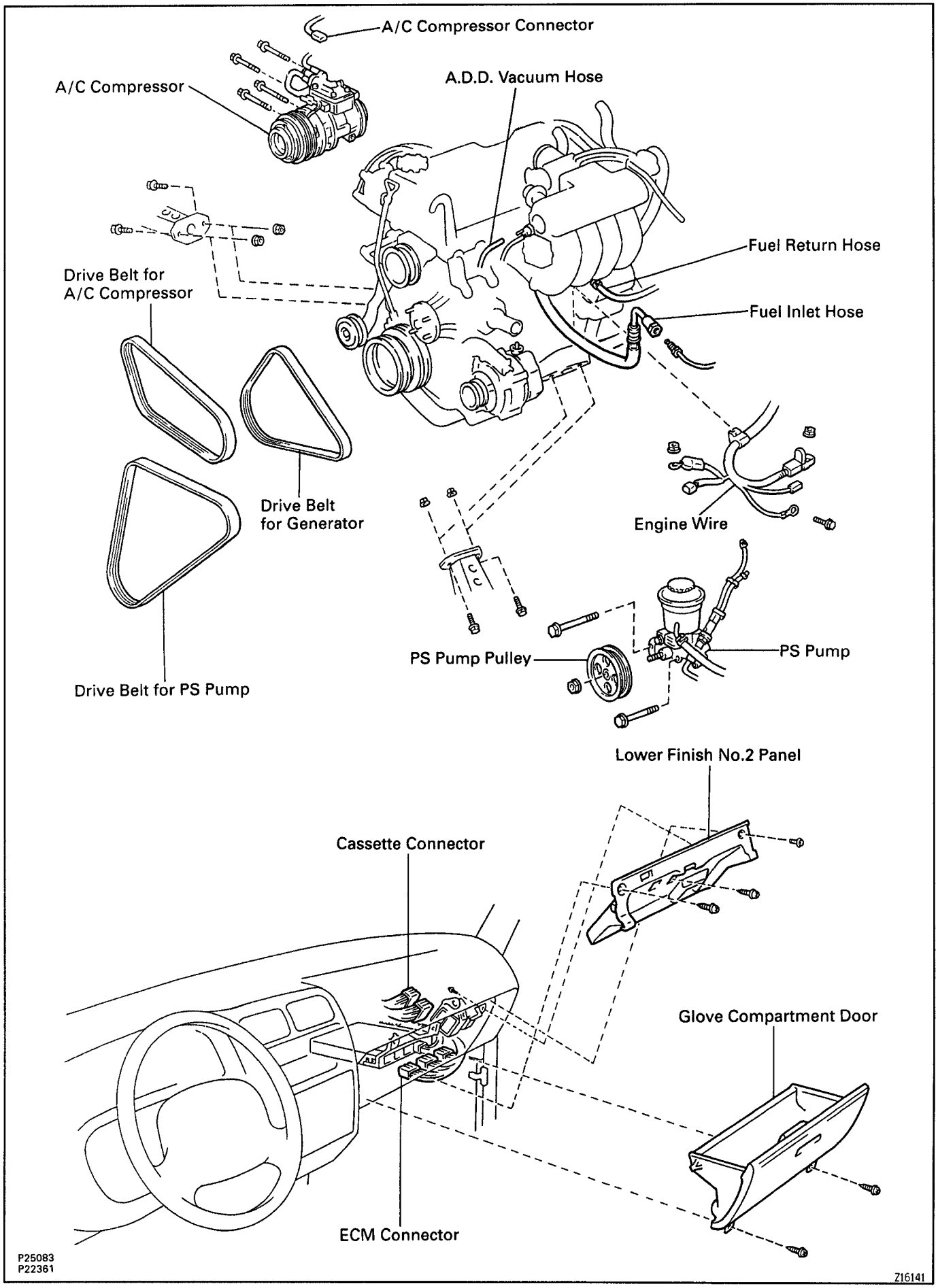
A/C Compressor Connector
A/C Compressor
A.D.D. Vacuum Hose
Fuel Return Hose
Fuel Inlet Hose
Drive Belt for A/C Compressor
Drive Belt for Generator
Engine Wire
PS Pump Pulley
PS Pump
Drive Belt for PS Pump
Lower Finish No.2 Panel
Cassette Connector
Glove Compartment Door
ECM Connector
P25083
P22361
Z16141

EG64K–01

ENGINE REMOVAL

1. **REMOVE ENGINE UNDER COVER**
2. **DRAIN ENGINE COOLANT**
3. **DRAIN ENGINE OIL**
4. **REMOVE HOOD**
5. **REMOVE RADIATOR**
   (See radiator removal in Cooling System)
6. **REMOVE DRIVE BELT FOR GENERATOR, FAN WITH FLUID COUPLING AND WATER PUMP PULLEY (See steps 6, 8 and 9 in water pump removal in Cooling System)**
7. **DISCONNECT THESE CABLES:**

(a) Disconnect the accelerator cable from the throttle body.

(b) w/ Cruise Control System:
Remove the actuator cover, and disconnect the cruise control cable from the actuator.

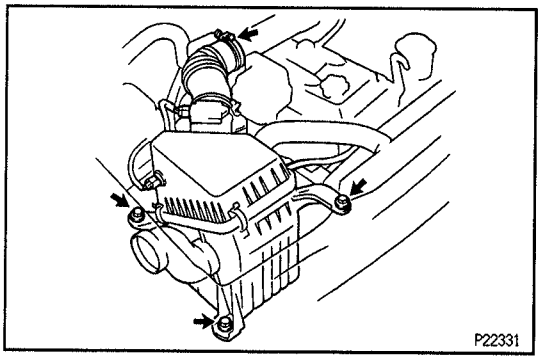
P22331

8. **REMOVE AIR CLEANER ASSEMBLY**

(a) Disconnect the IAT sensor and MAF meter connectors.

(b) Disconnect the 3 wire clamps and engine wire.

(c) California:
Disconnect the air hose from the air cleaner cap.

(d) Loosen the air cleaner hose clamp.

(e) Remove the 3 bolts and the MAF meter, resonator and air cleaner assembly.

9. **REMOVE INTAKE AIR CONNECTOR**
   (See step 4 in cylinder head removal)
10. **w/A/C:**
    DISCONNECT A/C COMPRESSOR

(a) Loosen the idler pulley nut and adjusting bolt, and remove the drive belt.

(b) Disconnect the A/C compressor connector.

(c) Remove the 4 bolts, and disconnect the compressor from the bracket.
HINT: Put aside the compressor, and suspend it.

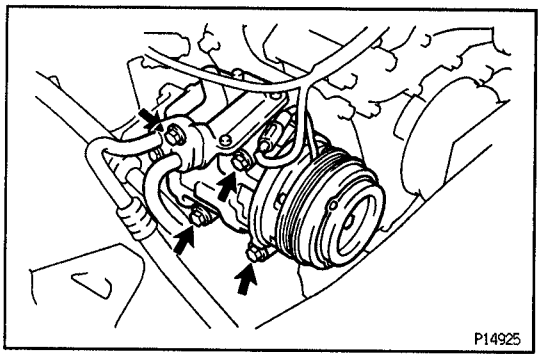
P14925

11. **REMOVE GENERATOR WIRE**

(a) Disconnect the generator connector.

(b) Remove the nut, and disconnect the generator wire and wire clip.

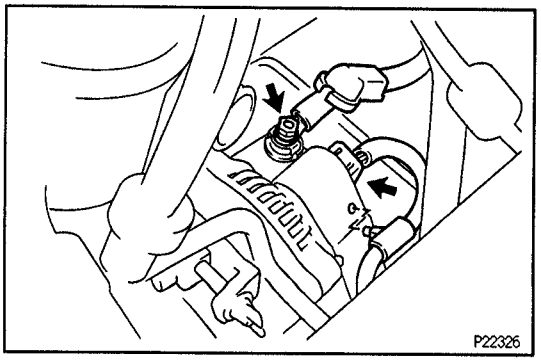
P22326

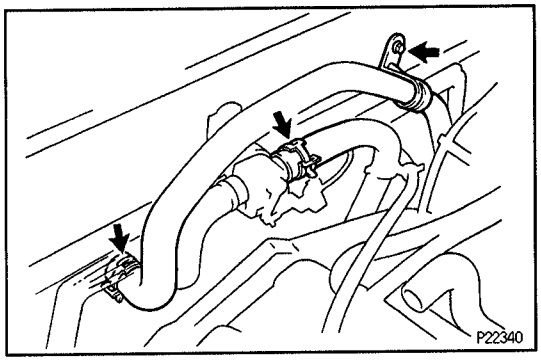

12. DISCONNECT HEATER HOSES

(a) Remove the bolt and hose clamp.

(b) Disconnect the heater hoses.

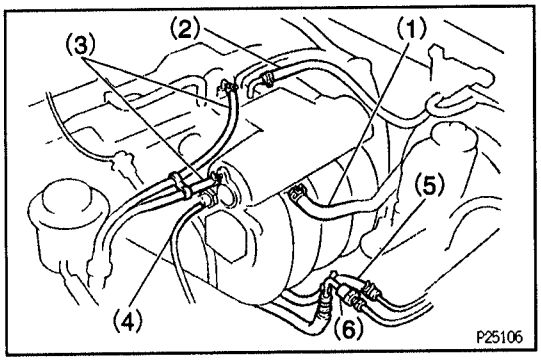

13. DISCONNECT HOSES

Disconnect these hoses:

(1) Brake booster vacuum hose
(2) EVAP hose
(3) 2 air hoses for PS idle–up
(4) w/ A.D.D.
Vacuum hose
(5) Fuel return hose
(6) Fuel inlet hose

14. DISCONNECT PS PUMP FROM ENGINE

(See step 8 in cylinder head removal)

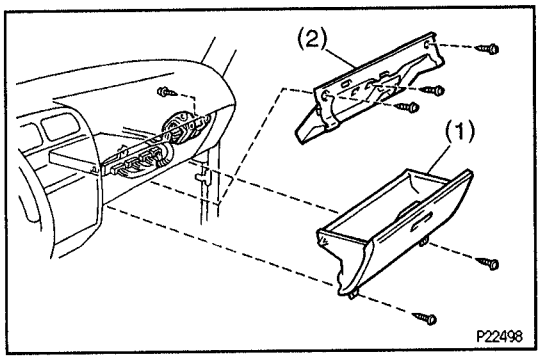

15. DISCONNECT ENGINE WIRE FROM CABIN

(a) Remove these parts:
(1) Glove compartment door
(2) Lower finish No.2 panel

(b) M/T:
Disconnect the 2 ECM connectors.

(c) A/T:
Disconnect the 3 ECM connectors.

(d) Disconnect the 2 cassette connectors (cowl wire x engine wire) and 2 wire clamps from the lower finish panel.

(e) Disconnect these connectors ground strap and clamps:
(1) Igniter connector
(2) VSV connector for EVAP and clamp
(3) Ground strap from cowl top panel
(4) 2 engine wire clamps

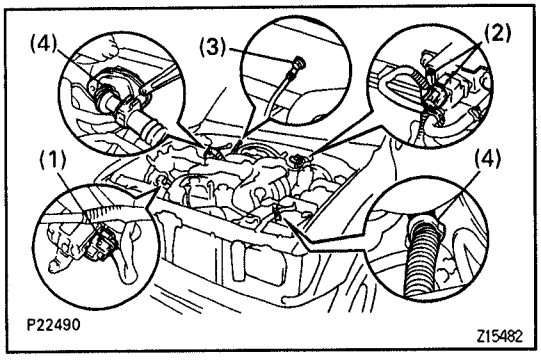

(f) Disconnect the vapor pressure sensor connector.

(g) Disconnect the VSV connector for vapor pressure sensor.

(h) Remove the bolt and wire bracket.

(i) Remove 2 nuts holding the engine wire retainer to the cowl panel, and pull out the engine wire from the cabin.

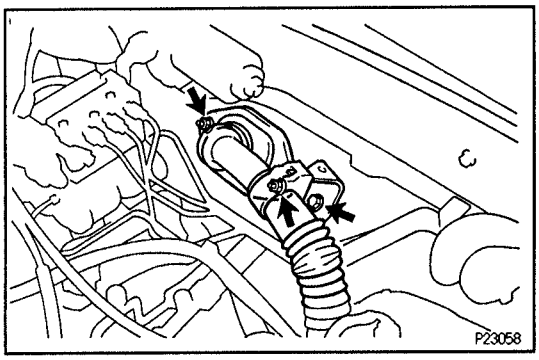

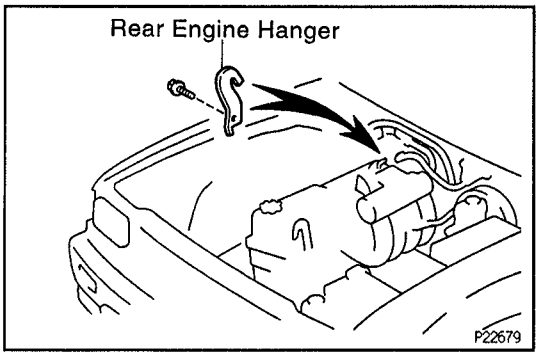

16. REMOVE ENGINE FROM VEHICLE

(a) Install a rear engine hanger in the correct direction.
Part No.:
HANGER, ENGINE, NO.2 12282–75020
BOLT 91512–61020
Torque: 42 N·m (420 kgf·cm, 30 ft·lbf)

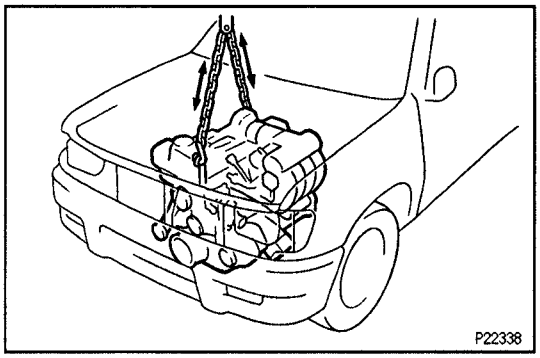

(b) Attach the engine hoist chain to the 2 engine hangers.

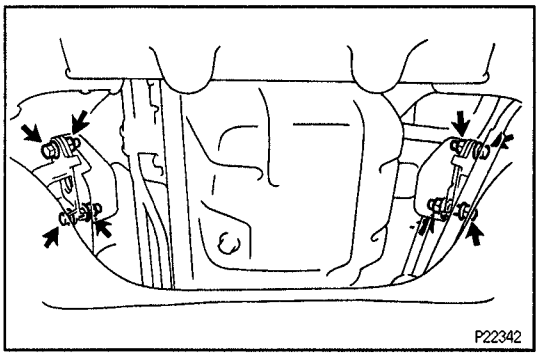

(c) Remove the 4 bolts and nuts holding the engine front mounting insulators to the frame.

(d) Lift the engine out of the vehicle slowly and carefully.
NOTICE: Make sure the engine is clear of all wiring and hoses.

(e) Place the engine onto the stand.

COMPONENTS FOR PREPARATION AND AFTER ASSEMBLY

EG1K5-06

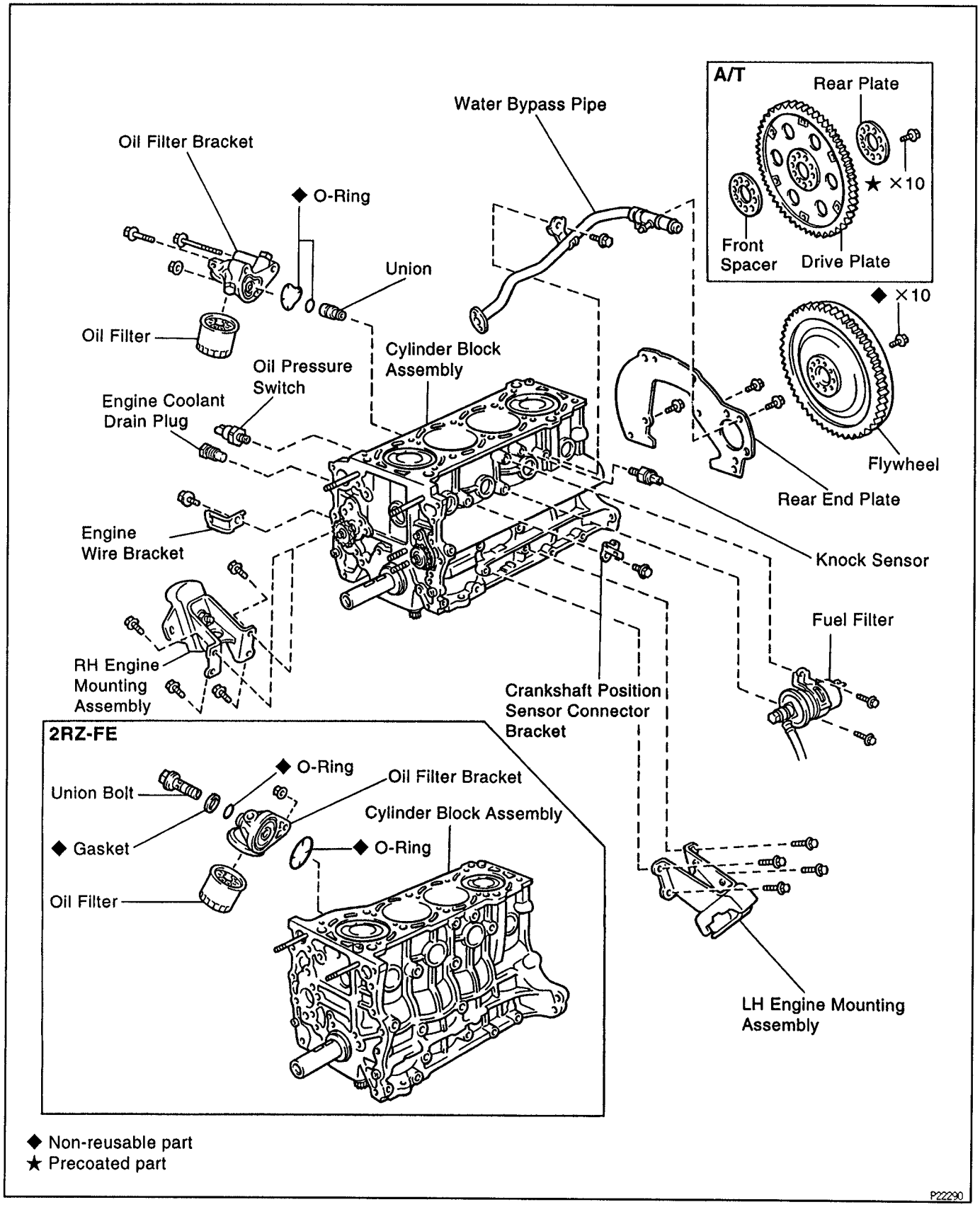

◆ Non-reusable part
★ Precoated part

P22290

EG6MT–02

PREPARATION FOR DISASSEMBLY

1. **M/T:**
   REMOVE FLYWHEEL
   Remove the 10 bolts and flywheel.
   A/T:
   REMOVE DRIVE PLATE
   Remove the 10 bolts, front spacer, drive plate and rear plate.
2. **REMOVE REAR END PLATE**
   Remove the 3 bolts and rear end plate.
3. **INSTALL ENGINE TO ENGINE STAND FOR DISASSEMBLY**
4. **REMOVE CYLINDER HEAD**
   (See cylinder head removal)
5. **REMOVE TIMING CHAINS, GEARS AND SPROCKET**
   (See timing chain removal)
6. **REMOVE FUEL FILTER**

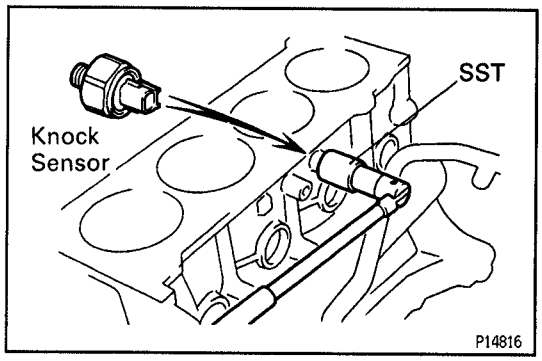

7. **REMOVE KNOCK SENSOR**
   Using SST, remove the knock sensor.
   SST 09816–30010
8. **REMOVE WATER BYPASS PIPE**
   Remove the bolt and water bypass pipe.
9. **REMOVE OIL FILTER**
   (See oil and filter replacement in Lubrication System)
10. **REMOVE OIL FILTER BRACKET**

A. 2RZ–FE:

(a) Remove the nut, union bolt, gasket and oil filter bracket.
(b) Remove the O–ring from the union bolt.

B. 3RZ–FE:

(a) Remove the 2 bolts, nut, oil filter bracket and O–ring.
(b) Using a 14 mm hexagon wrench, remove the union and O–ring.

11. **REMOVE ENGINE COOLANT DRAIN PLUG**

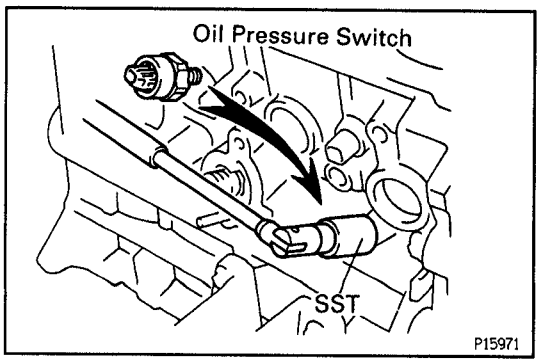

12. **REMOVE OIL PRESSURE SWITCH**
    Using SST, remove the oil pressure switch.
    SST 09816–30010
13. **REMOVE RH AND LH ENGINE MOUNTING ASSEMBLIES**
    Remove the 4 bolts and mounting assembly.
14. **REMOVE ENGINE WIRE BRACKET**
15. **REMOVE CRANKSHAFT POSITION SENSOR CONNECTOR BRACKET**

EG5MU–02

COMPONENTS FOR CYLINDER BLOCK DISASSEMBLY AND ASSEMBLY

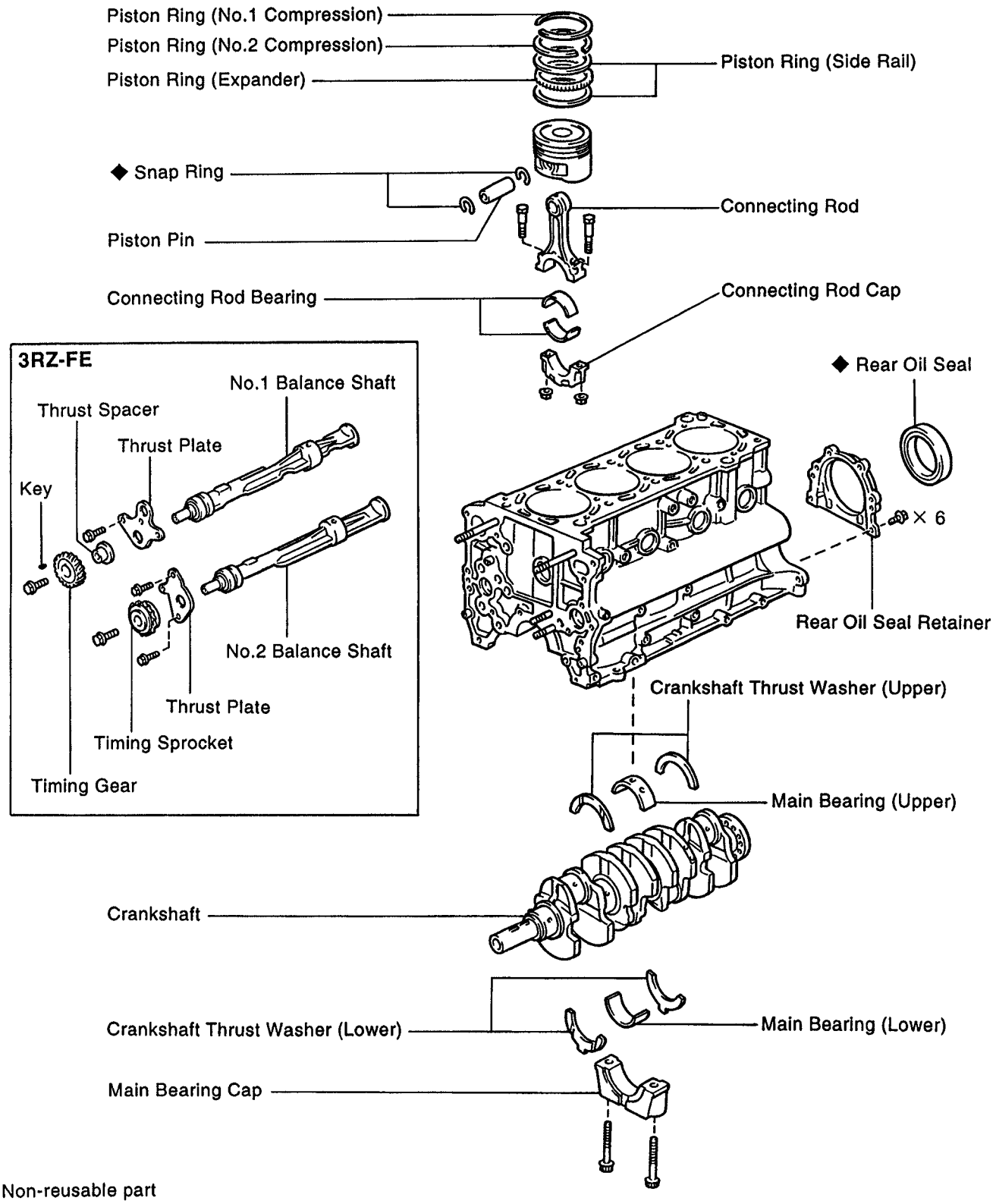

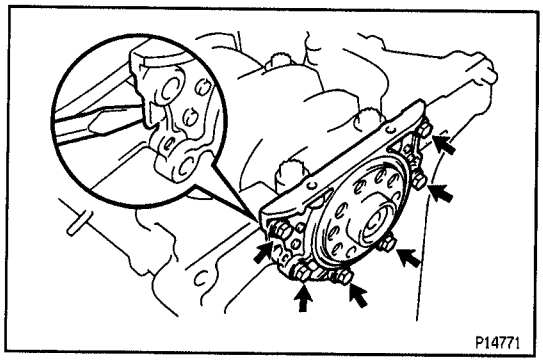

CYLINDER BLOCK DISASSEMBLY

EG5MV-02

1. REMOVE REAR OIL SEAL RETAINER

(a) Remove the 6 bolts.

(b) Using a screwdriver, remove the oil seal retainer by prying the portions between the oil seal retainer and cylinder block.

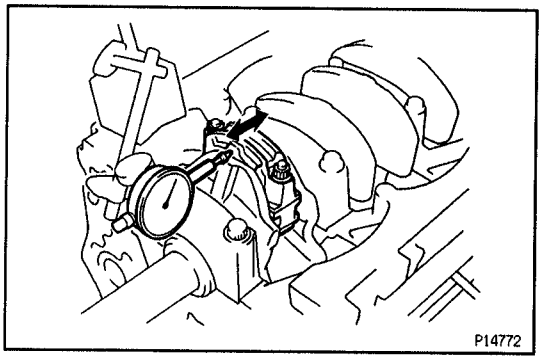

2. CHECK CONNECTING ROD THRUST CLEARANCE

Using a dial indicator, measure the thrust clearance while moving the connecting rod back and forth.

Standard thrust clearance:

0.160 – 0.312 mm (0.0063 – 0.0123 in.)

Maximum thrust clearance:

0.35 mm (0.0138 in.)

If the thrust clearance is greater than maximum, replace the connecting rod assembly. If necessary, replace the crankshaft.

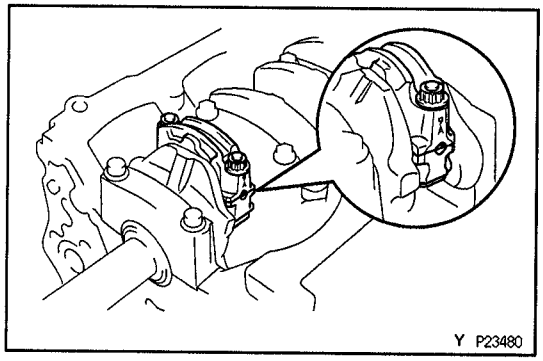

3. REMOVE CONNECTING ROD CAPS AND CHECK OIL CLEARANCE

(a) Check the matchmarks on the connecting rod and cap are aligned to ensure correct reassembly.

(b) Remove the connecting rod cap nuts.

(c) Using a plastic–faced hammer, lightly tap the connecting rod bolts and lift off the connecting rod cap.
HINT: Keep the lower bearing inserted with the connecting rod cap.

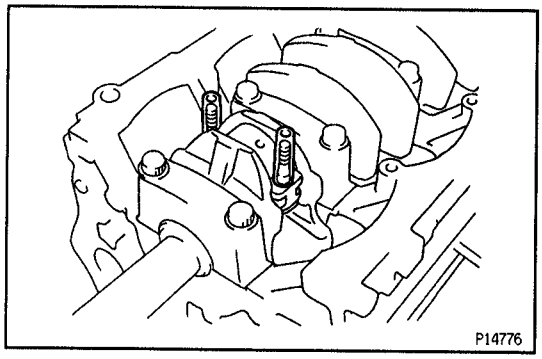

(d) Cover the connecting rod bolts with a short piece of hose to protect the crankshaft from damage.

(e) Clean the crank pin and bearing.

(f) Check the crank pin and bearing for pitting and scratches.
If the crank pin or bearing is damaged, replace the bearings. If necessary, grind or replace the crankshaft.

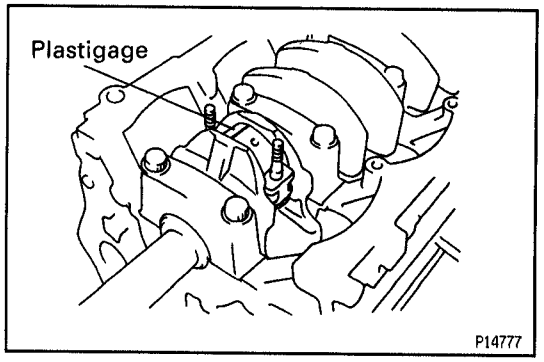

(g) Lay a strip of Plastigage across the crank pin.

(h) Install the connecting rod cap with the 2 nuts.
(See step 9 in cylinder block assembly)

Torque:

1st 45 N·m (460 kgf·cm, 33 ft·lbf)

2nd Turn 90°

NOTICE: Do not turn the crankshaft.

(i) Remove the 2 nuts and connecting rod cap.
(See procedure (b) and (c) above)

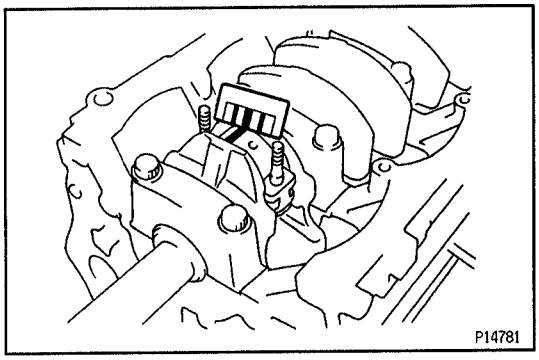
P14781

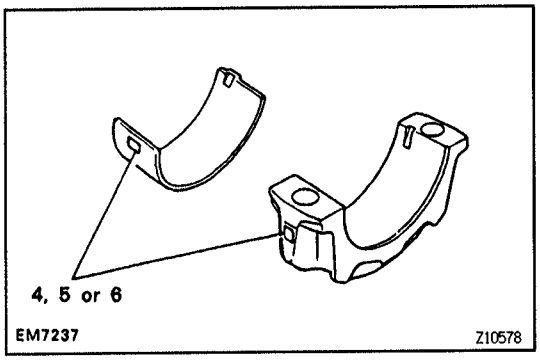

EM7237 Z10578

(j) Measure the Plastigage at its widest point.

Standard oil clearance:

STD

0.030 – 0.055 mm (0.0012 – 0.0022 in.)

U/S 0.25

0.031 – 0.071 mm (0.0012 – 0.0026 in.)

Maximum oil clearance:

0.10 mm (0.0039 in.)

If the oil clearance is greater than maximum, replace the bearings. If necessary, grind or replace the crankshaft.

HINT: If using a standard bearing, replace with one having the same number as marked on the bearing cap. There are 3 sizes of standard bearings, marked "4", "5" and "6" accordingly.

Reference:

Connecting rod big end inside diameter:

STD Mark "4"	56.000 – 56.006 mm (2.2047 – 2.2050 in.)
STD Mark "5"	56.006 – 56.012 mm (2.2050 – 2.2052 in.)
STD Mark "6"	56.012 – 56.018 mm (2.2052 – 2.2054 in.)
U/S 0.25	56.000 – 56.018 mm (2.2047 – 2.2054 in.)

Crankshaft crank pin diameter:

STD	52.987 – 53.000 mm (2.0861 – 2.0866 in.)
U/S 0.25	52.745 – 52.755 mm (2.0766 – 2.0770 in.)

Standard sized bearing center wall thickness:

STD Mark "4"	1.482 – 1.485 mm (0.0583 – 0.0585 in.)
STD Mark "5"	1.485 – 1.488 mm (0.0585 – 0.0586 in.)
STD Mark "6"	1.488 – 1.491 mm (0.0586 – 0.0587 in.)
U/S 0.25	1.601 – 1.607 mm (0.0630 – 0.0633 in.)

(k) Completely remove the Plastigage.

4. REMOVE PISTON AND CONNECTING ROD ASSEMBLIES

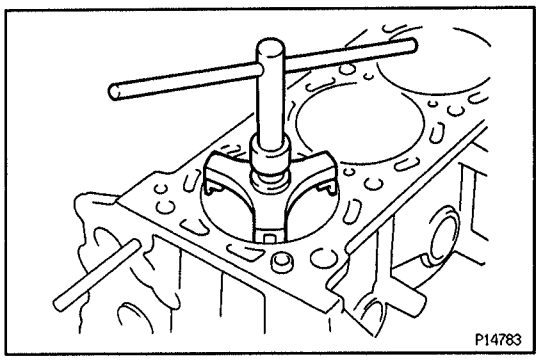
P14783

(a) Using a ridge reamer, remove the all carbon from the top of the cylinder.

(b) Push the piston, connecting rod assembly and upper bearing through the top of the cylinder block.

HINT:

- Keep the bearings, connecting rod and cap together.
- Arrange the piston and connecting rod assemblies in correct order.

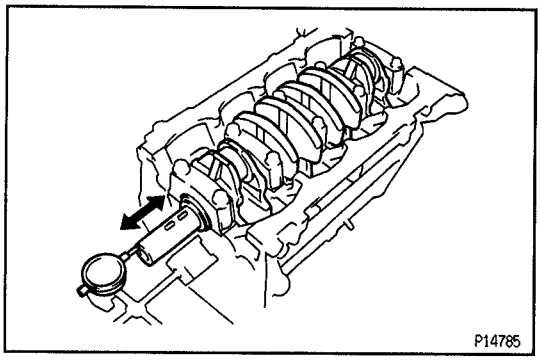
P14785

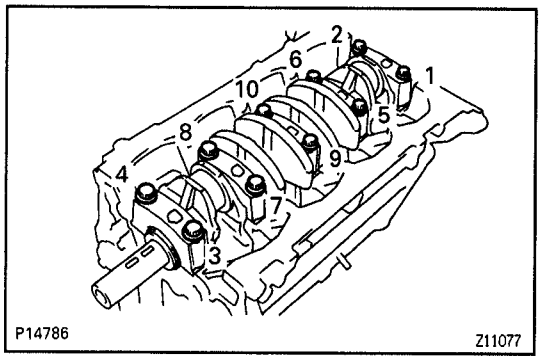

P14786 Z11077

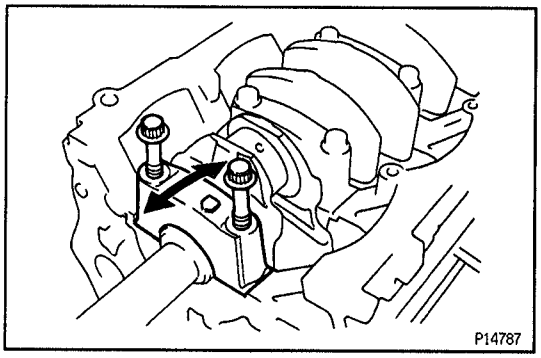
P14787

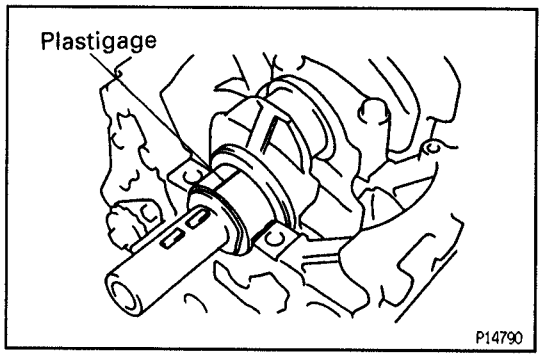

P14790

5. CHECK CRANKSHAFT THRUST CLEARANCE

Using a dial indicator, measure the thrust clearance while prying the crankshaft back and forth with a screwdriver.

Standard thrust clearance:

0.020 – 0.220 mm (0.0008 – 0.0087 in.)

Maximum thrust clearance:

0.30 mm (0.0118 in.)

If the thrust clearance is greater than maximum, replace the thrust washers as a set.

Thrust washer thickness:

2.440 – 2.490 mm (0.0961 – 0.0980 in.)

6. REMOVE MAIN BEARING CAPS AND CHECK OIL CLEARANCE

(a) Uniformly loosen and remove the main bearing cap bolts, in several passes, in the sequence shown.

(b) Using the removed main bearing cap bolts, pry the main bearing cap back and forth, and remove the main bearing caps, lower bearings and (No.3 main bearing cap only) lower thrust washers.

HINT:

- Keep the lower bearing and main bearing cap together.
- Arrange the main bearing caps and lower thrust washers in correct order.

(c) Lift out the crankshaft.

HINT: Keep the upper bearings and upper thrust washers together with the cylinder block.

(d) Clean each main journal and bearing.

(e) Check each main journal and bearing for pitting and scratches.

If the journal or bearing is damaged, replace the bearings. If necessary, grind or replace the crankshaft.

(f) Place the crankshaft on the cylinder block.

(g) Lay a strip of Plastigage across each journal.

(h) Install the main bearing caps.

(See step 7 in cylinder block assembly)

Torque:

1st 39 N·m (400 kgf·cm, 29 ft·lbf)

2nd Turn 90°

NOTICE: Do not turn the crankshaft.

(i) Remove the main bearing caps.

(See procedure (a) and (b) above)

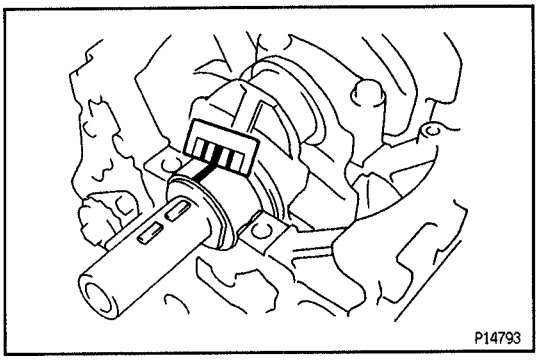
P14793

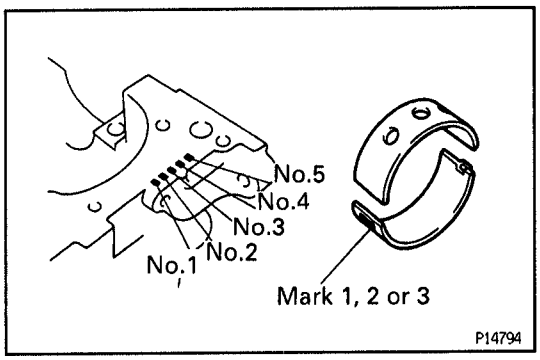

P14794

(j) Measure the Plastigage at its widest point.

Standard clearance:

STD

No.3

0.030 – 0.055 mm (0.0012 – 0.0022 in.)

Others

0.024 – 0.049 mm (0.0009 – 0.0019 in.)

U/S 0.25

No.3

0.030 – 0.070 mm (0.0012 – 0.0028 in.)

Others

0.025 – 0.065 mm (0.0010 – 0.0026 in.)

Maximum clearance:

0.10 mm (0.0039 in.)

If the oil clearance is greater than maximum, replace the bearings. If necessary, grind or replace the crankshaft.

HINT: If using a standard bearing, replace with one having the same number as marked on the block. There are 3 sizes of standard bearings, marked "1", "2" and "3" accordingly.

Reference:

Cylinder block main journal bore diameter:

STD Mark "1"	64.004 – 64.010 mm (2.5198 – 2.5201 in.)
STD Mark "2"	64.011 – 64.016 mm (2.5201 – 2.5203 in.)
STD Mark "3"	64.017 – 64.022 mm (2.5203 – 2.5205 in.)
U/S 0.25	64.000 – 64.024 mm (2.5197 – 2.5206 in.)

Crankshaft Journal diameter:

STD No.3	59.981 – 59.994 mm (2.2615 – 2.3620 in.)
STD Others	59.987 – 60.000 mm (2.3617 – 2.3622 in.)
U/S 0.25 No.3	59.740 – 59.750 mm (2.3520 – 2.3524 in.)
U/S 0.25 Others	59.745 – 59.755 mm (2.3522 – 2.3526 in.)

Bearing center wall thickness:

STD Mark "1"	1.987 – 1.990 mm (0.0782 – 0.0783 in.)
STD Mark "2"	1.991 – 1.993 mm (0.0784 – 0.0785 in.)
STD Mark "3"	1.994 – 1.996 mm (0.0785 – 0.0786 in.)
U/S 0.25	2.106 – 2.112 mm (0.0829 – 0.0831 in.)

(k) Completely remove the Plastigage.

7. REMOVE CRANKSHAFT

(a) Lift out the crankshaft.

(b) Remove the upper main bearings and upper thrust washers from the cylinder block.

HINT: Arrange the main bearings and thrust washers in correct order.

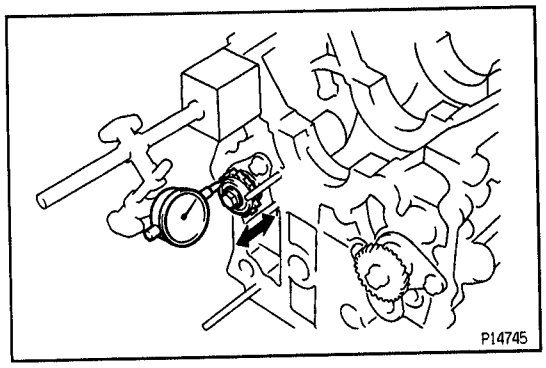

3RZ–FE:

Balance Shaft

8. CHECK THRUST CLEARANCES OF NO.1 (RH) AND NO.2 (LH) BALANCE SHAFTS

Using a dial indicator, measure the thrust clearance while moving the balance shaft back and forth.

Standard thrust clearance:

0.07 – 0.13 mm (0.0027 – 0.0051 in.)

Maximum thrust clearance:

0.20 mm (0.0079 in.)

If the thrust clearance is greater than maximum, replace the balance shaft thrust washer.

If necessary, replace the balance shaft.

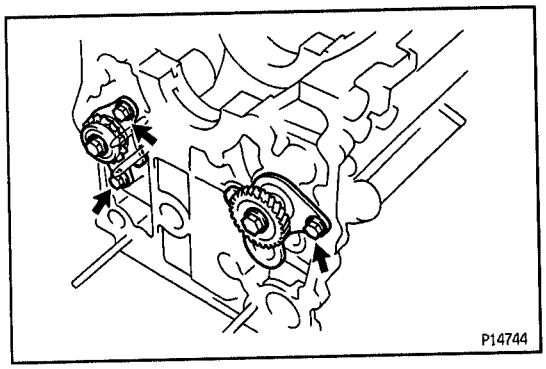

9. REMOVE NO.1 (RH) AND NO.2 (LH) BALANCE SHAFTS

(a) Remove the 1 bolt from the No.1 balance shaft.

(b) Remove the 2 bolts from the No.2 balance shaft.

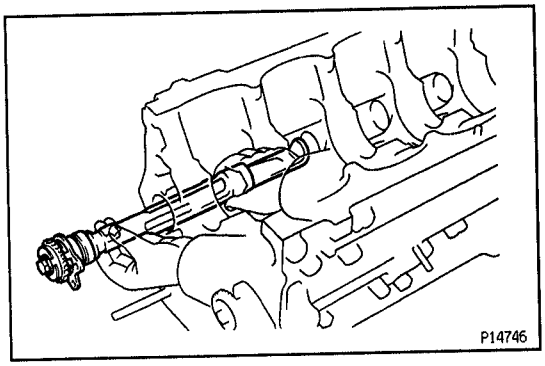

(c) Remove the balance shafts.

NOTICE: When removing the balance shaft make sure you support the balance shaft with both hands and avoid scratching the balance shaft bearing on the cylinder block side.

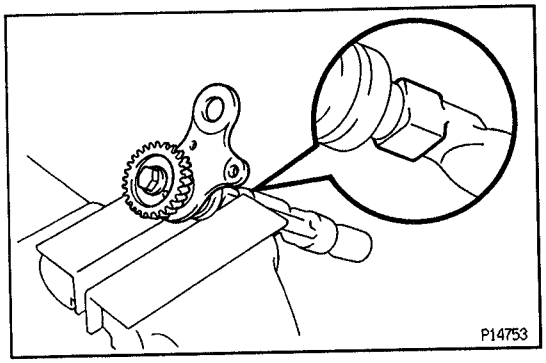

10. DISASSEMBLE NO.1 (RH) BALANCE SHAFT

(a) Mount the hexagon wrench head portion of the balance shaft in a vise.

NOTICE: Be careful not to damage the balance shaft.

(b) Remove these parts:

- Bolt
- No.1 balance shaft thrust plate
- Balance shaft thrust spacer
- Balance shaft timing gear
- Key

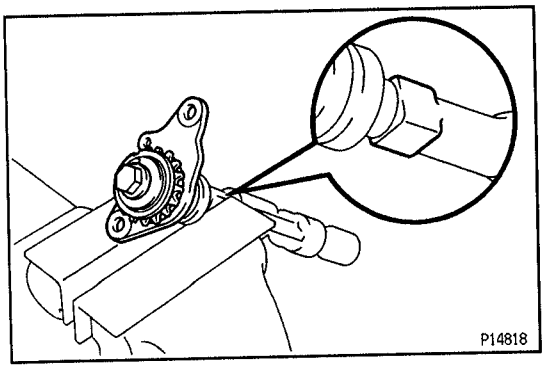

11. DISASSEMBLE NO.2 (LH) BALANCE SHAFT

(a) Mount the hexagon wrench head portion of the balance shaft in a vise.

NOTICE: Be careful not to damage the balance shaft.

(b) Remove these parts:

- Bolt
- No.2 balance shaft thrust prate
- Balance shaft timing sprocket

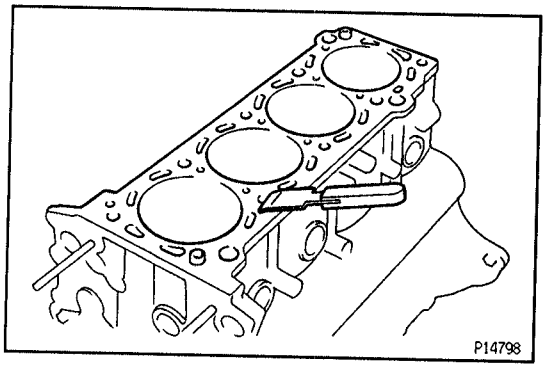

CYLINDER BLOCK INSPECTION

EG5MW-02

1. CLEAN CYLINDER BLOCK

A. Remove gasket material

Using a gasket scraper, remove all the gasket material from the top surface of the cylinder block.

B. Clean cylinder block

Using a soft brush and solvent, thoroughly clean the cylinder block.

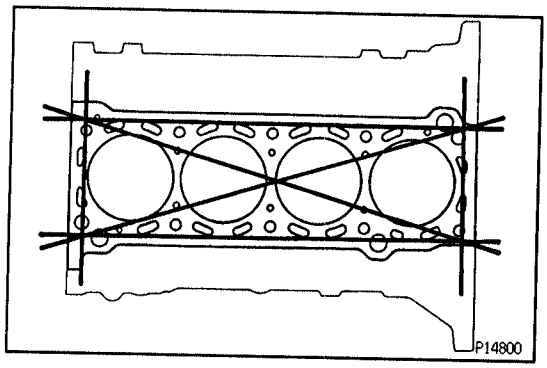

2. INSPECT TOP SURFACE OF CYLINDER BLOCK FOR FLATNESS

Using a precision straight edge and thickness gauge, measure the surfaces contacting the cylinder head gasket for warpage.

Maximum warpage:

0.05 mm (0.0020 in.)

If warpage is greater than maximum, replace the cylinder block.

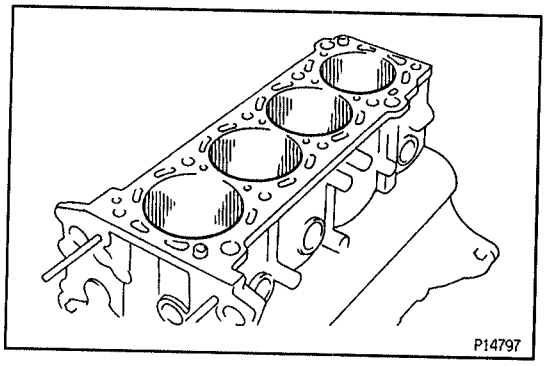

3. INSPECT CYLINDER FOR VERTICAL SCRATCHES

Visually check the cylinder for vertical scratches.

If deep scratches are present, rebore all the 4 cylinders. If necessary, replace the cylinder block.

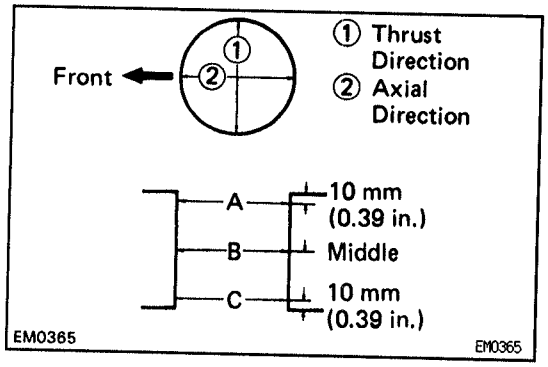

4. INSPECT CYLINDER BORE DIAMETER

Using a cylinder gauge, measure the cylinder bore diameter at positions A, B and C in the thrust and axial directions.

Standard diameter:

94.990 – 95.003 mm (3.7400 – 3.7403 in.)

Maximum diameter:

95.06 mm (3.7425 in.)

If the diameter is greater than maximum, rebore all the 4 cylinders. If necessary, replace the cylinder block.

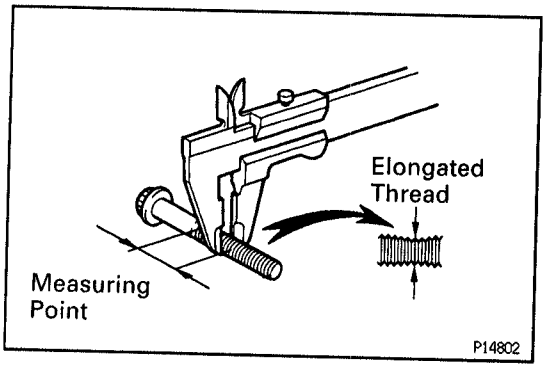

5. REMOVE CYLINDER RIDGE

If the wear is less than 0.2 mm (0.008 in.), using a ridge reamer, grind the top of the cylinder.

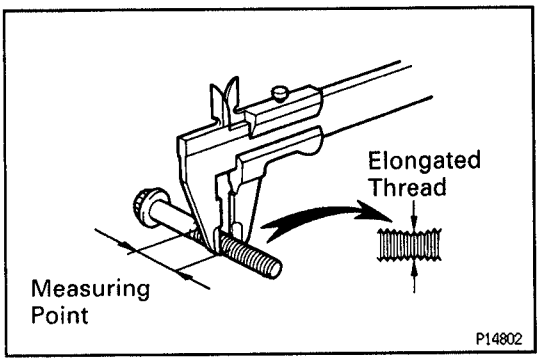

6. INSPECT MAIN BEARING CAP BOLTS

Using vernier calipers, measure the minimum diameter of the elongated thread at the measuring point.

Standard outside diameter:

10.76 – 10.97 mm (0.4236 – 0.4319 in.)

Minimum outside diameter:

10.40 mm (0.4094 in.)

If the diameter is less than minimum, replace the bolt.

EG

PISTON AND CONNECTING ROD ASSY DISASSEMBLY

EGSMX–02

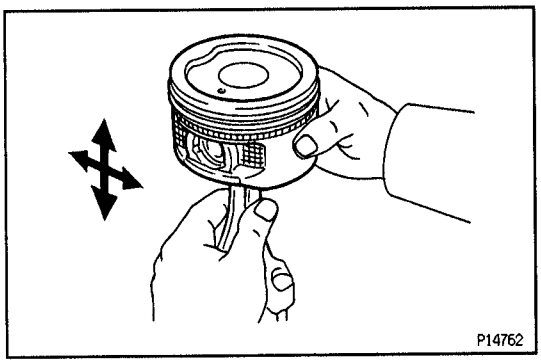

1. CHECK FIT BETWEEN PISTON AND PISTON PIN

Try to move the piston back and forth on the piston pin.

If any movement is felt, replace the piston and pin as a set.

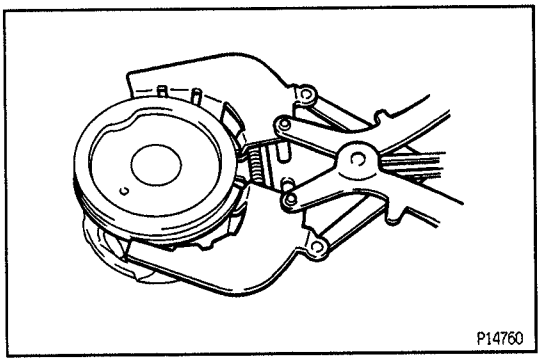

2. REMOVE PISTON RINGS

(a) Using a piston ring expander, remove the 2 compression rings.

(b) Remove the 2 side rails and oil ring by hand.

HINT: Arrange the rings in correct order only.

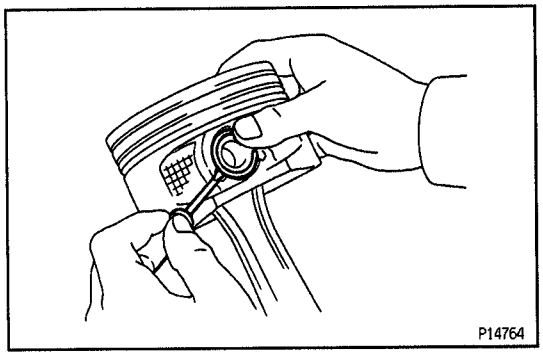

3. DISCONNECT CONNECTING ROD FROM PISTON

(a) Using a small screwdriver, pry out the 2 snap rings.

(b) Gradually heat the piston to 80 – 90°C (176 – 194 °F).

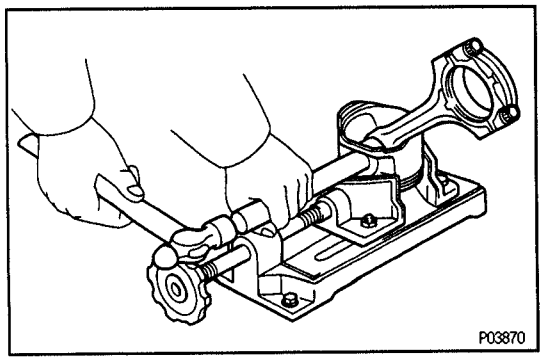

(c) Using plastic–faced hammer and brass bar, lightly tap out the piston pin and remove the connecting rod.

HINT:

- The piston and pin are a matched set.
- Arrange the pistons, pins, rings, connecting rods and bearings correct order.

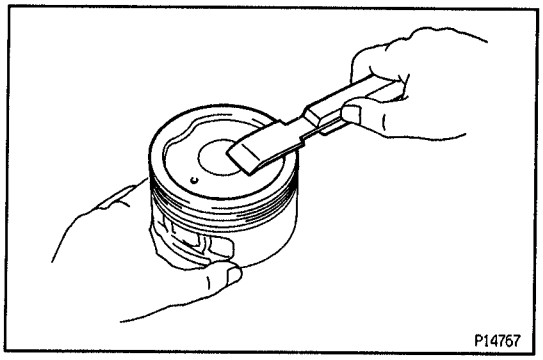
P14767

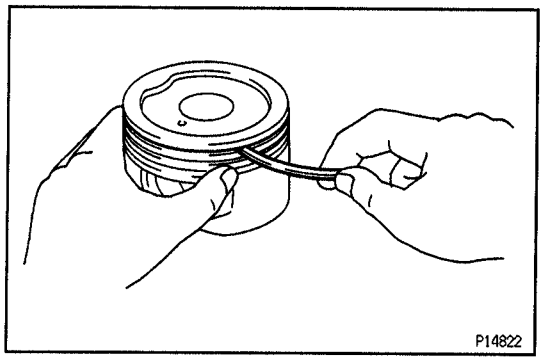
P14822

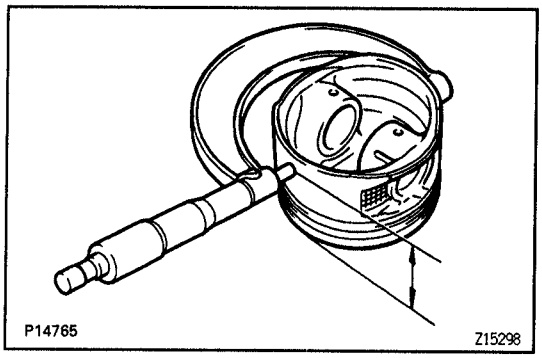
P14765 Z15298

PISTON AND CONNECTING ROD INSPECTION

EG64L–01

1. CLEAN PISTON

(a) Using a gasket scraper, remove the carbon from the piston top.

(b) Using a groove cleaning tool or broken ring, clean the piston ring grooves.

(c) Using solvent and a brush, thoroughly clean the piston.

NOTICE: Do not use a wire brush.

2. INSPECT PISTON AND PISTON RING

A. Inspect piston oil clearance

(a) Using a micrometer, measure the piston diameter at right angles to the piston pin center line, 35.5 mm (1.40 in.) for 2RZ–FE or 37.5 mm (1.47 in.) for 3RZ–FE from the piston head.

Piston diameter:

STD

2RZ–FE:

94.923 – 94.933 mm (3.7371 – 3.7375 in.)

3RZ–FE:

94.933 – 94.943 mm (3.7375 – 3.7379 in.)

O/S 0.50

2RZ–FE:

95.423 – 95.433 mm (3.7568 – 3.7572 in.)

3RZ–FE:

95.433 – 95.443 mm (3.7572 – 3.7576 in.)

(b) Measure the cylinder bore diameter in the thrust directions. (See step 4 in cylinder block inspection)

(c) Subtract the piston diameter measurement from the cylinder bore diameter measurement.

Standard oil clearance:

2RZ–FE:

0.057 – 0.080 mm (0.0022 – 0.0031 in.)

3RZ–FE:

0.047 – 0.070 mm (0.0019 – 0.0028 in.)

If the oil clearance is greater than maximum, replace all the 4 pistons and rebore all the 4 cylinders. If necessary, replace the cylinder block.

HINT (Use new cylinder block): Use a piston with the same number mark as the cylinder bore diameter marked on the cylinder block.

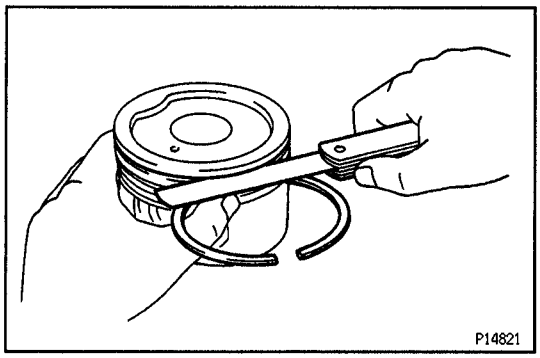

B. Inspect piston ring groove clearance

Using a thickness gauge, measure the clearance between new piston ring and the wall of the piston ring groove.

Ring groove clearance:

No.1

0.020 – 0.070 mm (0.0008 – 0.0028 in.)

No.2

0.030 – 0.070 mm (0.0012 – 0.0028 in.)

If the clearance is not as specified, replace the piston.

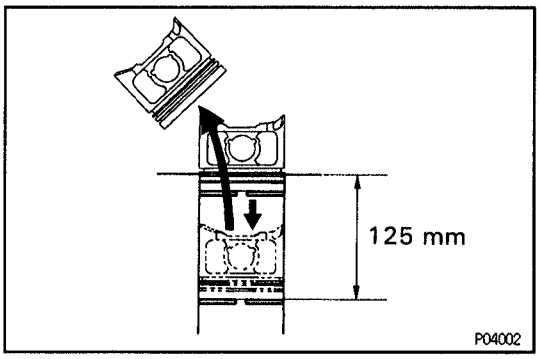

C. Inspect piston ring end gap

(a) Insert the piston ring into the cylinder bore.

(b) Using a piston, push the piston ring a little beyond the bottom of the ring travel, 125 mm (4.92 in.) from the top of the cylinder block.

(c) Using a thickness gauge, measure the end gap.

Ring end gap:

No.1

0.300 – 0.400 mm (0.0118 – 0.0157 in.)

No.2

0.400 – 0.500 mm (0.0157 – 0.0197 in.)

If the end gap is not as specified, replace the piston ring. If the end gap is not as specified, even with a new piston ring, rebore all the 4 cylinders or replace the cylinder block.

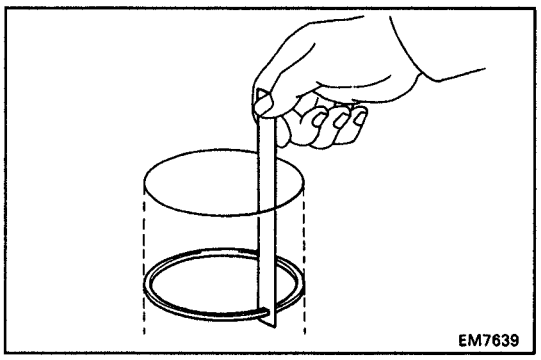

D. Inspect piston pin fit

At 80 – 90°C (176 – 194°F), you should be able to push the piston pin into the piston pin hole with your thumb.

3. INSPECT CONNECTING ROD

A. Inspect connecting rod alignment

Using a rod aligner and thickness gauge, check the connecting rod alignment.

- Check for out–of–alignment.

Maximum out–of–alignment:

0.05 mm (0.0020 in.) per 100 mm (3.94 in.)

If out–of–alignment is greater than maximum, replace the connecting rod assembly.

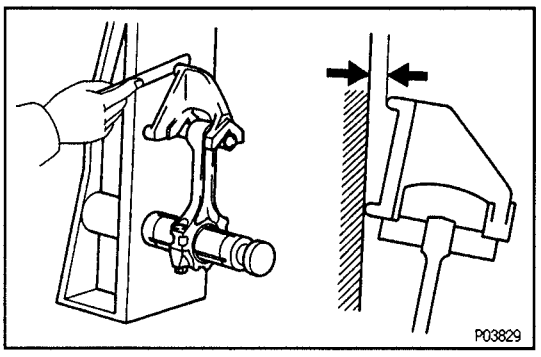

- Check for twist

Maximum twist:

0.15 mm (0.0059 in.) per 100 mm (3.94 in.)

If twist is greater than maximum, replace the connecting rod assembly.

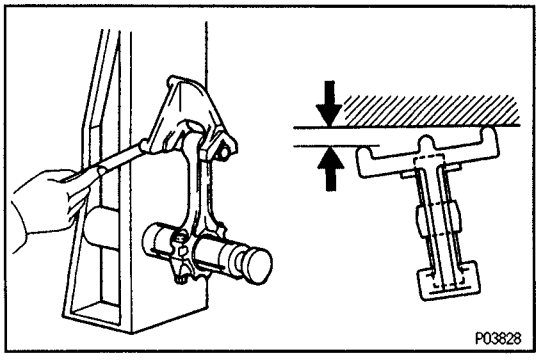

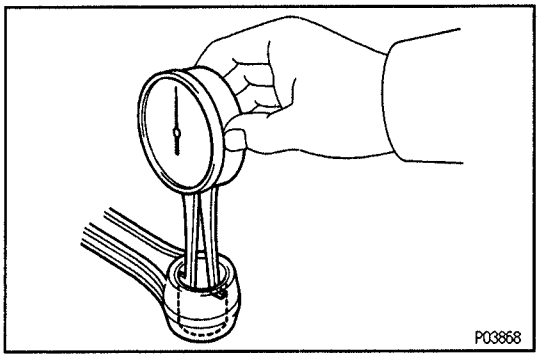

B. Inspect piston pin oil clearance

(a) Using a caliper gauge, measure the inside diameter of the connecting rod bushing.

Bushing inside diameter:

24.008 – 24.017 mm (0.9452 – 0.9455 in.)

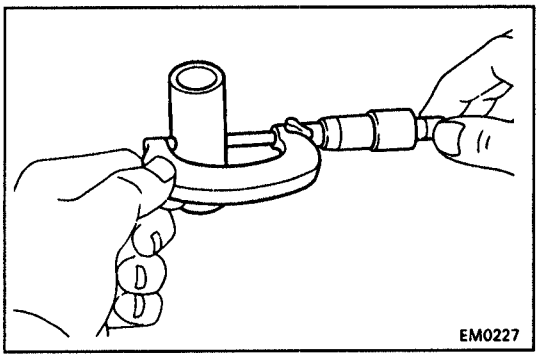

(b) Using a micrometer, measure the piston pin diameter.

Piston pin diameter:

24.000 – 24.009 mm (0.9449 – 0.9452 in.)

(c) Subtract the piston pin diameter measurement from the bushing inside diameter measurement.

Standard oil clearance:

0.005 – 0.011 mm (0.0002 – 0.0004 in.)

Maximum oil clearance:

0.015 mm (0.0006 in.)

If the oil clearance is greater than maximum, replace the bushing. If necessary, replace the piston and piston pin as a set.

C. If necessary, replace connecting rod bushing

(a) Using SST and a press, press out the bushing.
SST 09207–76010

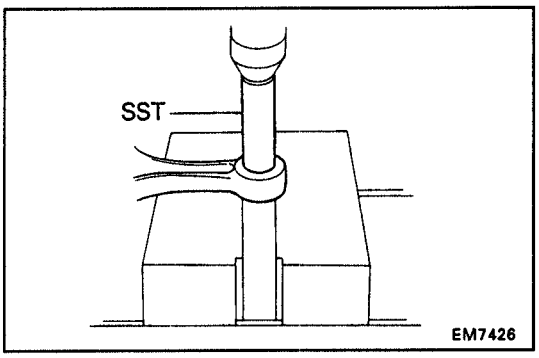

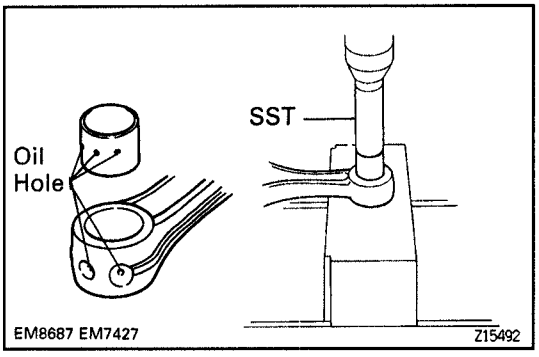

(b) Align the oil holes of a new bushing and the connecting rod.

(c) Using SST and a press, press in the bushing.
SST 09207–76010

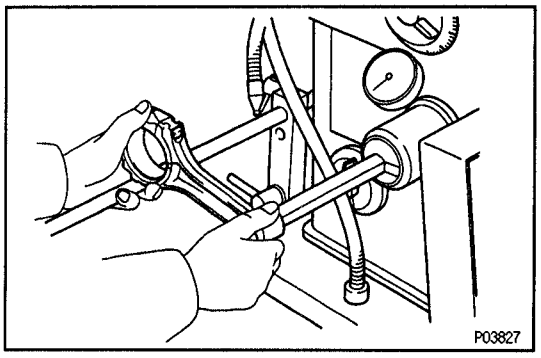

(d) Using a pin hole grinder, hone the bushing to obtain the standard specified clearance (see step B above) between the bushing and piston pin.

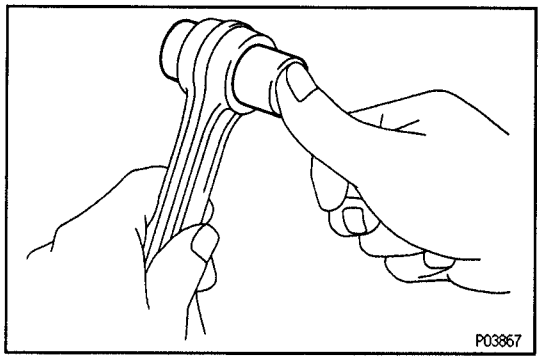

(e) Check the piston pin fit at normal room temperature. Coat the piston pin with engine oil, and push it into the connecting rod with your thumb.

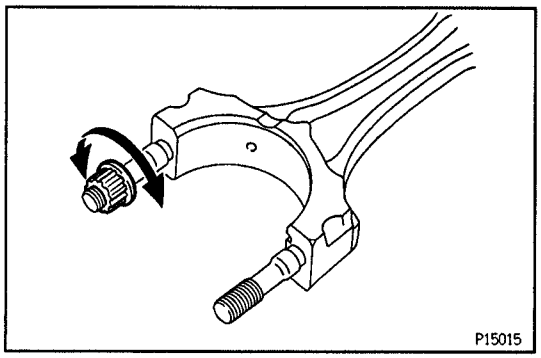

D. Inspect connecting rod bolts

(a) Install the cap nut to the connecting rod bolt. Check that the cap nut can be turned easily by hand to the end of the thread.

(b) If the cap nut cannot be turned easily, measure the minimum outside diameter of the connecting rod bolt with vernier calipers.

Standard outside diameter:

7.80 – 7.90 mm (0.3071 – 0.3110 in.)

Minimum outside diameter:

7.60 mm (0.2992 in.)

HINT: If the location of minimum diameter cannot be judged by visual inspection, measure the outer diameter at the location shown in the illustration.

If the outside diameter is less than limit, replace the connecting rod bolt and nut as a set.

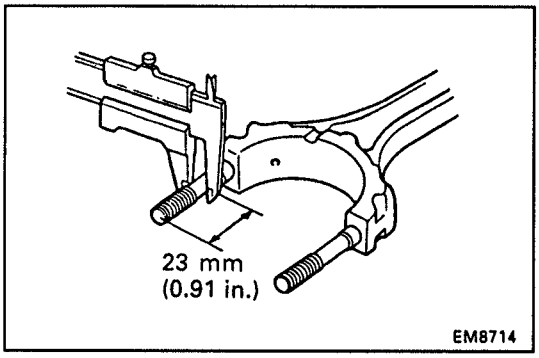

EG35J–06

3RZ–FE:
BALANCE SHAFT INSPECTION

INSPECT NO. 1 (RH) AND NO. 2 (LH) BALANCE SHAFTS

(a) Using a cylinder gauge, measure the inside diameter of the balance shaft bearing.

Bearing inside diameter (from front side):

No.1 (RH)

38.025 – 38.045 mm (1.4970 – 1.4978 in.)

No.2 (LH)

37.525 – 37.545 mm (1.4774 – 1.4781 in.)

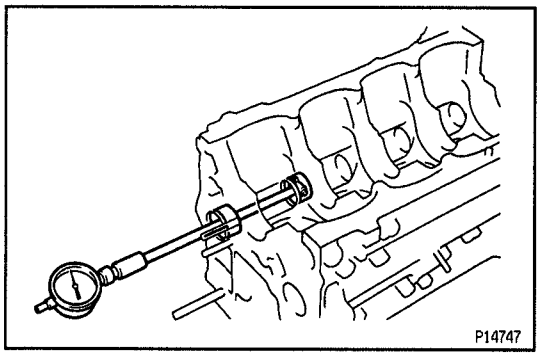

(b) Using a micrometer, measure the diameter of the balance shaft main journals.

Main journal diameter (from front side):

No.1 (RH)

37.969 – 37.985 mm (1.4948 – 1.4955 in.)

No.2 (LH)

37.449 – 37.465 mm (1.4744 – 1.4750 in.)

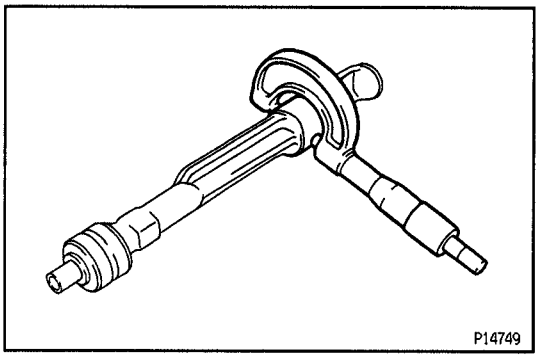

(c) Subtract the balance shaft main journal diameter measurement from the balance shaft bearing inside diameter measurement.

Standard oil clearance:

No.1 (RH)

0.040 – 0.076 mm (0.0016 – 0.0031 in.)

No.2 (LH)

0.060 – 0.096 mm (0.0024 – 0.0038 in.)

Maximum oil clearance:

0.15 mm (0.0059 in.)

If the clearance is greater than maximum, replace the cylinder block and balance shaft.

EG64M–01

CYLINDER BORING

HINT:

- Bore all the 4 cylinders for the oversized piston outside diameter.
- Replace all the piston rings with ones to match the oversized pistons.

1. SELECT OVERSIZED PISTONS

Oversized piston diameter:

O/S 0.50

2RZ–FE:

95.423 – 95.433 mm (3.7568 – 3.7572 in.)

3RZ–FE:

95.433 – 95.443 mm (3.7572 – 3.7576 in.)

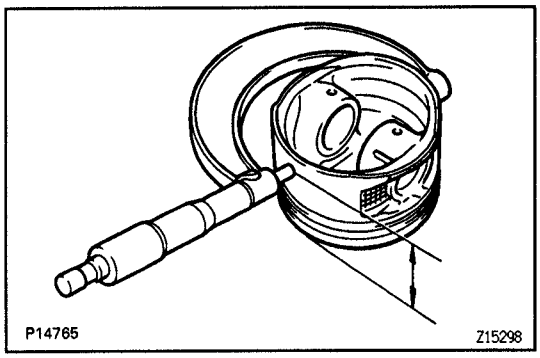

2. CALCULATE AMOUNT TO BORE CYLINDERS

(a) Using a micrometer, measure the piston diameter at right angles to the piston pin center line, 35.5 mm (1.40 in.) for 2RZ–FE or 37.5 mm (1.47 in.) for 3RZ–FE from the piston head.

(b) Calculate the amount of each cylinder is to be rebored as follows:

Size to be rebored = P + C – H

P = Piston diameter

C = Piston clearance

2RZ–FE:

0.057 – 0.080 mm (0.0022 – 0.0031 in.)

3RZ–FE:

0.047 – 0.070 mm (0.0019 – 0.0028 in.)

H = Allowance for honing

0.020 mm (0.0008 in.) or less

3. BORE AND HONE CYLINDER TO CALCULATED DIMENSIONS

Maximum honing:

0.02 mm (0.0008 in.)

NOTICE: Excess honing will destroy the finished roundness.

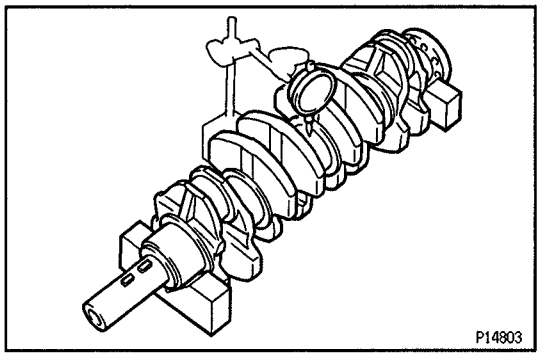

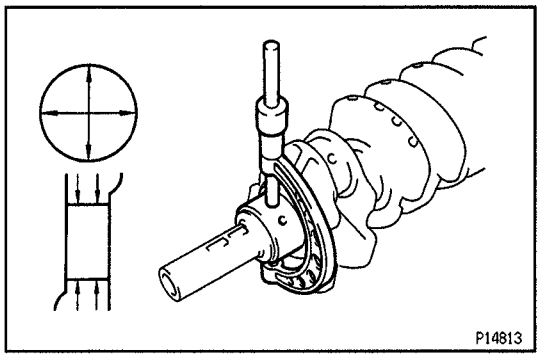

CRANKSHAFT INSPECTION AND REPAIR EG0BY–1G

1. INSPECT CRANKSHAFT FOR RUNOUT

(a) Place the crankshaft on V–blocks.

(b) Using a dial indicator, measure the circle runout at the center journal.

Maximum circle runout:

0.03 mm (0.0012 in.)

If the circle runout is greater than maximum, replace the crankshaft.

2. INSPECT MAIN JOURNALS AND CRANK PINS

(a) Using a micrometer, measure the diameter of each main journal and crank pin.

Main journal diameter:

STD

No.3

59.981 – 59.994 mm (2.2615 – 2.3620 in.)

Others

59.987 – 60.000 mm (2.3617 – 2.3622 in.)

U/S 0.25

No.3

59.740 – 59.750 mm (2.3520 – 2.3524 in.)

Others

59.745 – 59.755 mm (2.3522 – 2.3526 in.)

Crank pin diameter:

STD

52.987 – 53.000 mm (2.0861 – 2.0866 in.)

U/S 0.25

52.745 – 52.755 mm (2.0766 – 2.0770 in.)

If the diameter is not as specified, check the oil clearance (See steps 3 and 6 in cylinder block disassembly). If necessary, grind or replace the crankshaft.

(b) Check each main journal and crank pin for taper and out–of–round as shown.

Maximum taper and out–of–round:

0.005 mm (0.0002 in.)

If the taper and out–of–round is greater than maximum, replace the crankshaft.

3. IF NECESSARY, GRIND AND HONE MAIN JOURNALS AND/OR CRANK PINS

Grind and hone the main journals and/or crank pins to the finished undersized diameter (See procedure in step 2).

Install new main journal and/or crank pin undersized bearings.

EG

CRANKSHAFT OIL SEALS REPLACEMENT EGSNO-02

HINT: There are 2 methods (A and B) to replace the oil seal which are as follows:

1. REPLACE CRANKSHAFT FRONT OIL SEAL
(See crankshaft front oil seal replacement in Lubrication System)

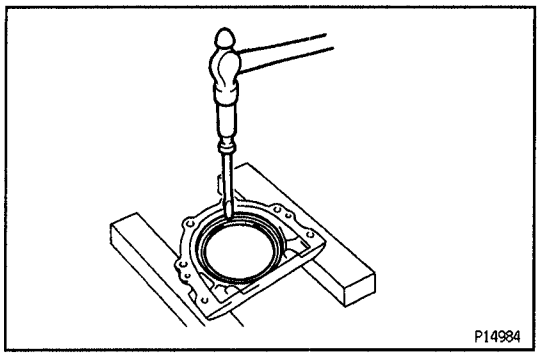

2. REPLACE CRANKSHAFT REAR OIL SEAL

A. If rear oil seal retainer is removed from cylinder block:

(a) Using a screwdriver and a hammer, tap out the oil seal.

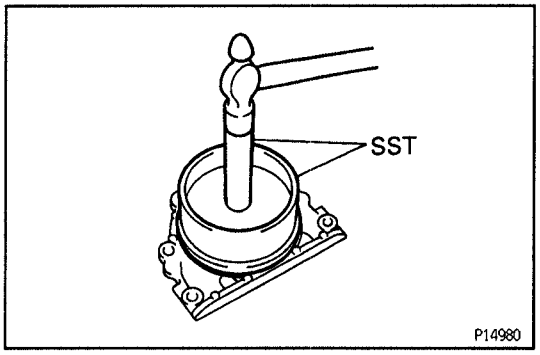

(b) Using SST and a hammer, tap in a new oil seal until its surface is flush with the oil seal retainer edge.
SST 09223–15030, 09950–70010 (09951–07150)

(c) Apply MP grease to the oil seal lip.

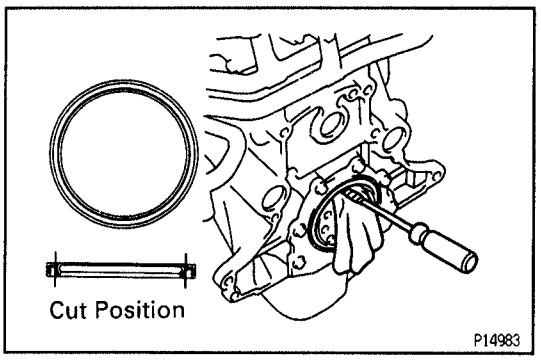

B. If rear oil seal retainer is installed to cylinder block:

(a) Using a knife, cut off the oil seal lip.

(b) Using a screwdriver, pry out the oil seal.

NOTICE: Be careful not to damage the crankshaft. Tape the screwdriver tip.

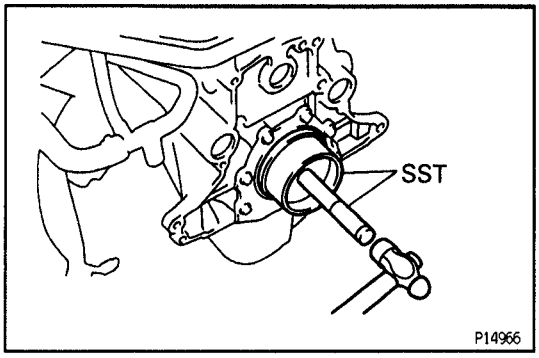

(c) Apply MP grease to a new oil seal lip.
(d) Using SST and a hammer, tap in the oil seal until its surface is flush with the rear oil seal retainer edge.
SST 09223–15030, 09950–70010 (09951–07150)

EG5N1–02

PISTON AND CONNECTING ROD ASSEMBLY

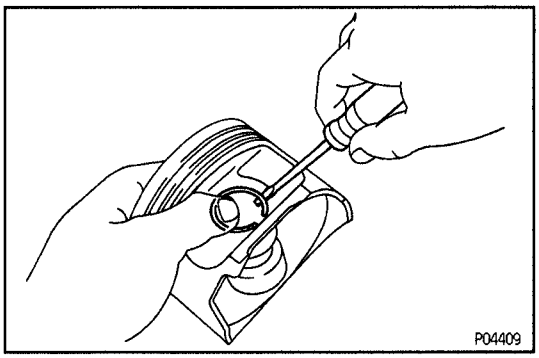

1. ASSEMBLE PISTON AND CONNECTING ROD

(a) Install a new snap ring on one side of the piston pin hole.
(b) Gradually heat the piston to 80–90°C (176–194°F).

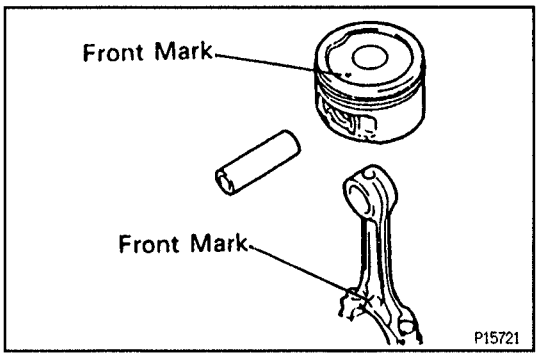

(c) Coat the piston pin with engine oil.
(d) Align the front marks of the piston and connecting rod, and push in the piston pin with your thumb.

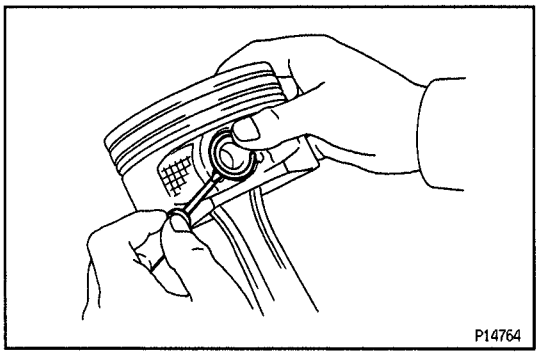

(e) Install a new snap ring on the other side of the piston pin hole.

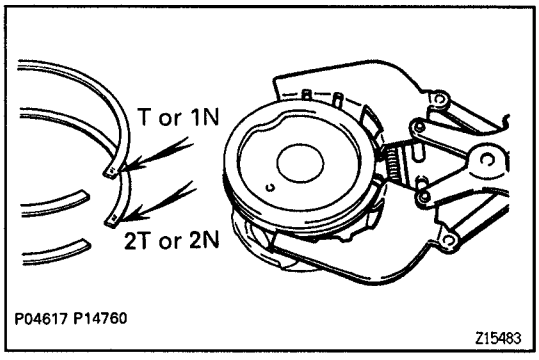

2. INSTALL PISTON RINGS

(a) Install the oil ring expander and 2 side rails by hand.
(b) Using a piston ring expander, install the 2 compression rings with the code mark facing upward.
Code mark:
No.1: "T" or "1N"
No.2: "2T" or "2N"

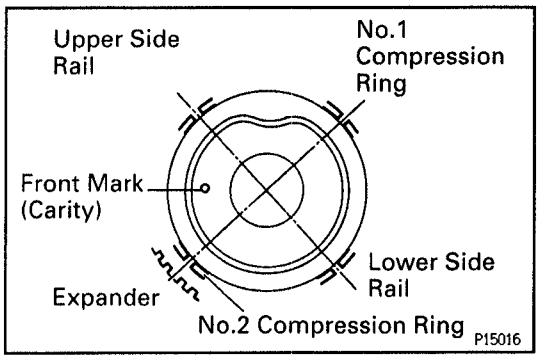

(c) Position the piston rings so that the ring ends are as shown.
NOTICE: Do not align the ring ends.

3. INSTALL BEARINGS

(a) Align the bearing claw with the groove of the connecting rod or connecting rod cap.

(b) Install the bearings in the connecting rod and connecting rod cap.

EG

EG04N–01

CYLINDER BLOCK ASSEMBLY

HINT:

- Thoroughly clean all parts to be assembled.
- Before installing the parts, apply fresh engine oil to all sliding and rotating surfaces.
- Replace all gaskets, O–rings and oil seals with new parts.

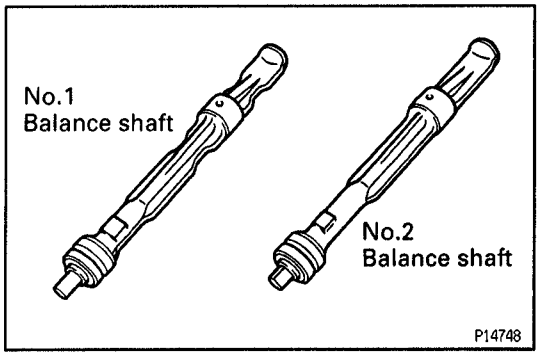

3RZ–FE:

Balance Shaft

HINT:

- No.1 balance shaft: Has indentations
- No.3 balance shaft: Has no indentations

1. ASSEMBLY NO.1 (RH) BALANCE SHAFT

(a) Mount the hexagon wrench head portion of the No.1 balance shaft in a vise.
NOTICE: Be careful not to damage the balance shaft.

(b) Install these parts:
(1) No.1 balance shaft thrust plate
(2) Balance shaft thrust spacer
(3) Balance shaft timing gear
(4) Key

(c) Install and torque the bolt.
Torque: 36 N·m (365 kgf·cm, 26 ft·lbf)

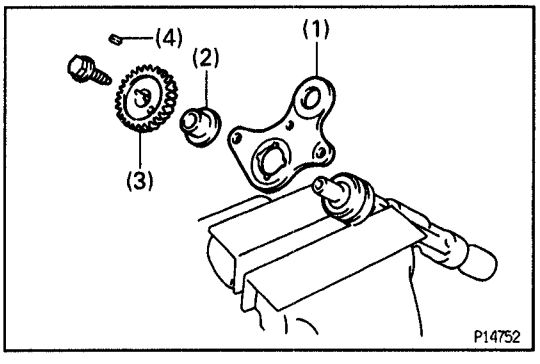

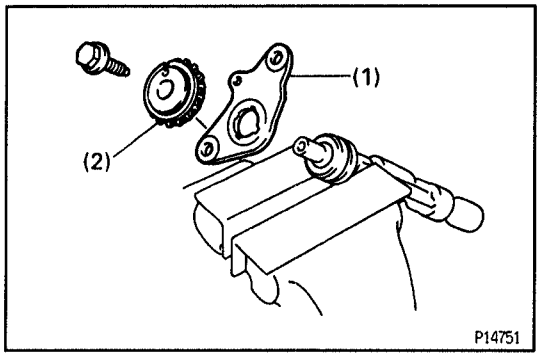

2. ASSEMBLY NO.2 (LH) BALANCE SHAFT

(a) Mount the hexagon wrench head portion of the No.2 balance shaft in a vise.
NOTICE: Be careful not to damage the balance shaft.

(b) Install these parts:
(1) No.2 balance shaft thrust plate
(2) Balance shaft timing sprocket

(c) Install and torque the bolt.
Torque: 36 N·m (365 kgf·cm, 26 ft·lbf)

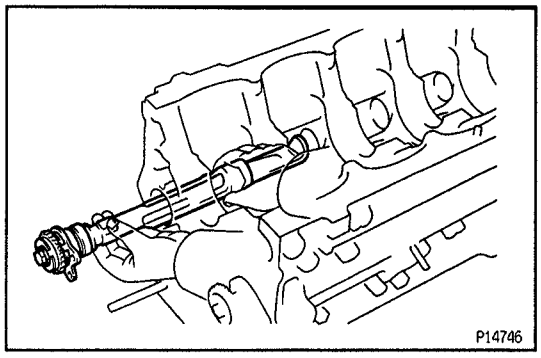

3. INSTALL BALANCE SHAFTS

(a) Install balance shafts.

NOTICE: When installing the balance shaft make sure you support the balance shaft with both hands and avoid scratching the balance shaft bearing on the cylinder block side.

(b) Install the No.1 balance shaft with the bolt.

(c) Install the No.2 balance shaft with the 2 bolts.

Torque: 18 N·m (185 kgf·cm, 13 ft·lbf)

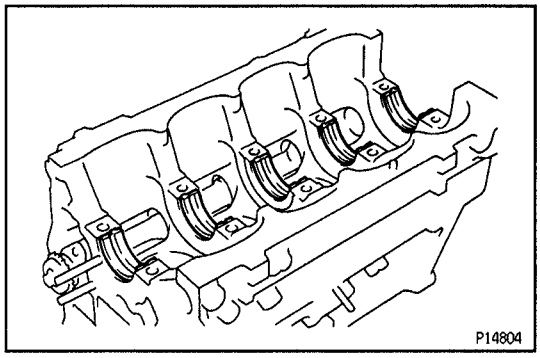

4. INSTALL MAIN BEARINGS

(a) Align the bearing claw with the claw groove of the cylinder block, and push in the 5 upper bearings.

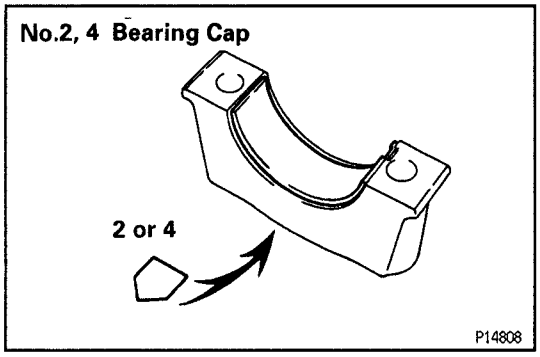

(b) Align the bearing claw with the claw groove of the main bearing cap, and push in the 5 lower bearings.

HINT: A number is marked on each main bearing cap to indicate the installation position.

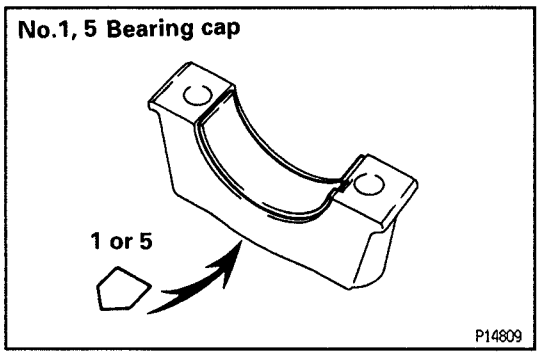

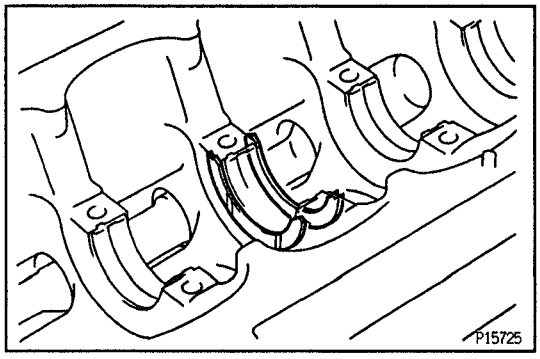

5. INSTALL UPPER THRUST WASHERS

Install the 2 thrust washers under the No.3 journal position of the cylinder block with the oil grooves facing outward.

6. PLACE CRANKSHAFT ON CYLINDER BLOCK

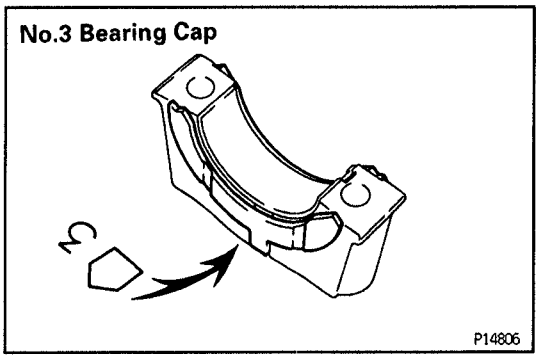

7. INSTALL MAIN BEARING CAPS AND LOWER THRUST WASHERS

A. Place main bearing caps and lower thrust washers on cylinder block

(a) Install the 2 thrust washers on the No.3 bearing cap with the grooves facing outward.

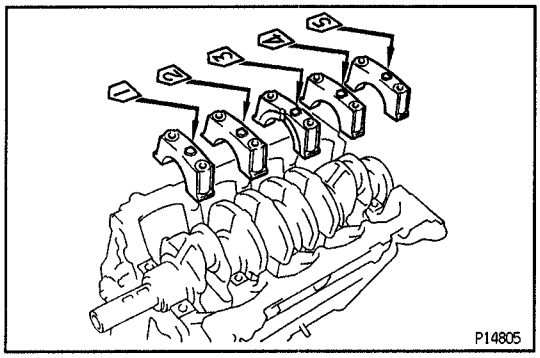

(b) Install the 5 main bearing caps in their proper locations.
HINT: Each bearing cap has a number and front mark.

B. Install main bearing cap bolts

HINT:

- The main bearing cap bolts are tightened in 2 progressive steps (steps (b) and (d)).
- If any of the main bearing cap bolts is broken or deformed, replace it.

(a) Apply a light coat of engine oil on the threads and under the heads of the main bearing cap bolts.

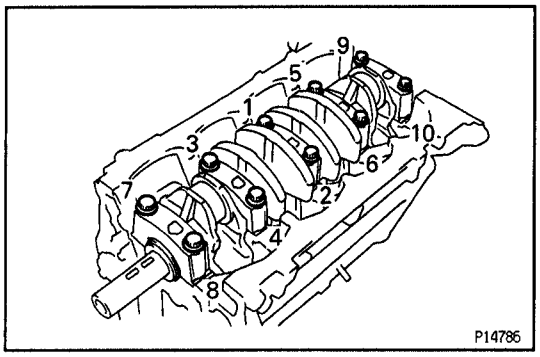

(b) Install and uniformly tighten the 10 bolts of the main bearing caps, in several passes, in the sequence shown.
Torque: 39 N·m (400 kgf·cm, 29 ft·lbf)
If any one of the main bearing cap bolts does not meet the torque specification, replace the main bearing cap bolt.

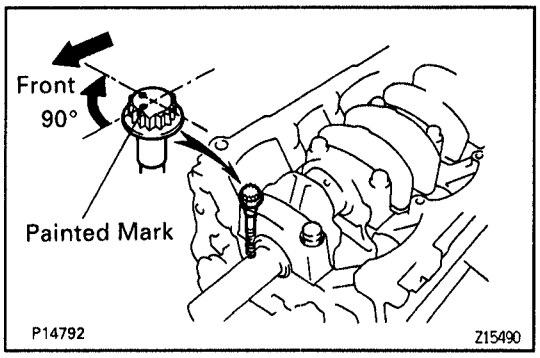

(c) Mark the front of the main bearing cap bolt with paint.
(d) Retighten the main bearing cap bolts by 90° in the numerical order shown above.
(e) Check that the painted mark is now at a 90° angle to the front.
(f) Check that the crankshaft turns smoothly.
(g) Check the crankshaft thrust clearance.
(See step 5 in cylinder block disassembly)

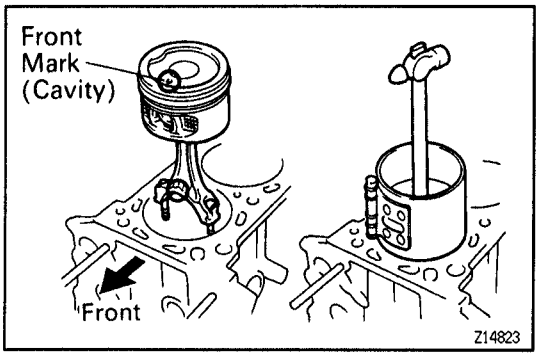

8. INSTALL PISTON AND CONNECTING ROD ASSEMBLIES

(a) Cover the connecting rod bolts with a short piece of hose to protect the crankshaft from damage.
(b) Using a piston ring compressor, push the correctly numbered piston and connecting rod assemblies into each cylinder with the front mark of the piston facing forward.

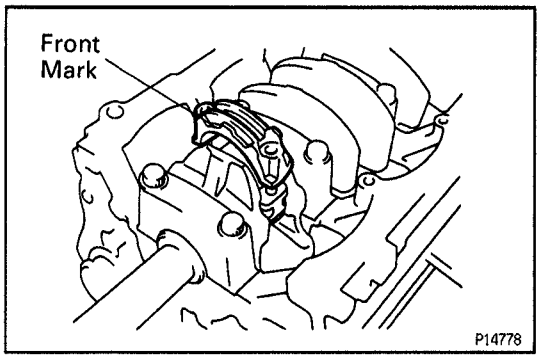

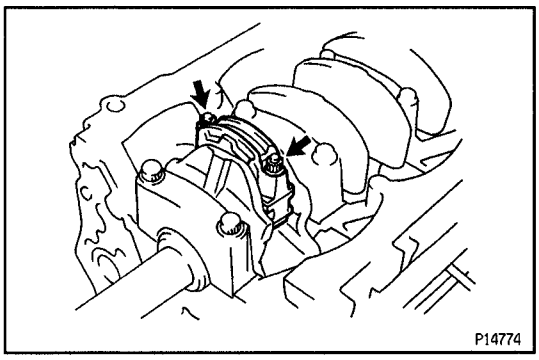

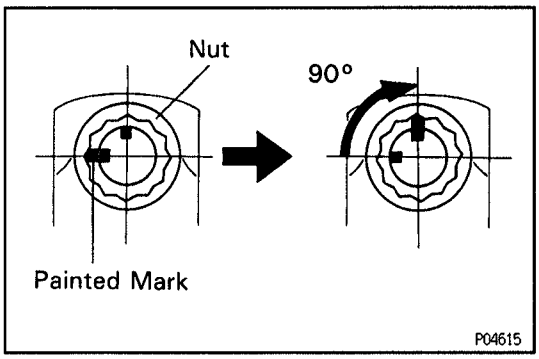

9. INSTALL CONNECTING ROD CAPS

A. Place connecting rod cap on connecting rod

(a) Match the numbered connecting rod cap with the connecting rod.

(b) Install the connecting rod cap with the front mark facing forward.

B. Install connecting rod cap nuts

HINT:

- The connecting rod cap nuts are tightened in 2 progressive steps (steps (b) and (d)).
- If any connecting rod bolt is broken or deformed, replace it.

(a) Apply a light coat of engine oil on the threads and under the nuts of the connecting rod cap.

(b) Install and alternately tighten the nuts of the connecting rod cap in several passes.

Torque: 45 N·m (460 kgf·cm, 33 ft·lbf)

If any one of the connecting rod cap nuts does not meet the torque specification, replace the connecting rod bolt and cap nut as a set.

(c) Mark the front of the connecting rod cap nut and bolt with paint.

(d) Retighten the connecting rod cap nuts 90° as shown.

(e) Check that the painted mark on the nut is at a 90° angle in relation to the mark on the bolt.

(f) Check that the crankshaft turns smoothly.

(g) Check the connecting rod thrust clearance.
(See step 2 in cylinder block disassembly)

10. INSTALL REAR OIL SEAL RETAINER

(a) Remove any old packing (FIPG) material and be careful not to drop any oil on the contact surfaces of the retainer and cylinder block.

- Using a razor blade and gasket scraper, remove all the old packing (FIPG) material from the gasket surfaces and sealing groove.
- Thoroughly clean all components to remove all the loose material.
- Using a non–residue solvent, clean both sealing surfaces.

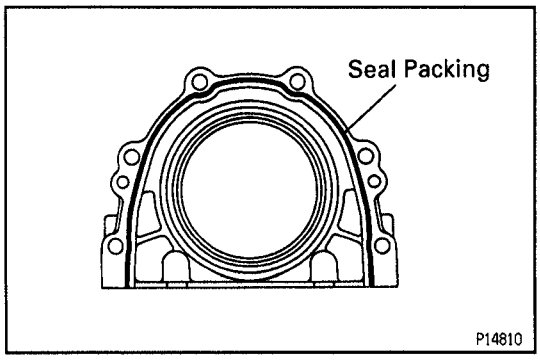

(b) Apply seal packing to the retainer as shown in the illustration.

Seal packing:

Part No. 08826–00080 or equivalent

- Install a nozzle that has been cut to a 2 – 3 mm (0.08 – 0.12 in.) opening.

HINT: Avoid applying an excessive amount to the surface.

- Parts must be assembled within 5 minutes of application. Otherwise the material must be removed and reapplied.
- Immediately remove nozzle from the tube and reinstall cap.

(c) Install the retainer with the 6 bolts.
Torque: 13.5 N·m (135 kgf·cm, 9.7 ft·lbf)

EG

EG5N3–02

AFTER ASSEMBLY

1. **INSTALL CRANKSHAFT POSITION SENSOR CONNECTOR BRACKET**
2. **INSTALL ENGINE WIRE BRACKET**
3. **INSTALL RH AND LH ENGINE MOUNTING ASSEMBLIES**
Torque: 52 N·m (520 kgf·cm, 38 ft·lbf)

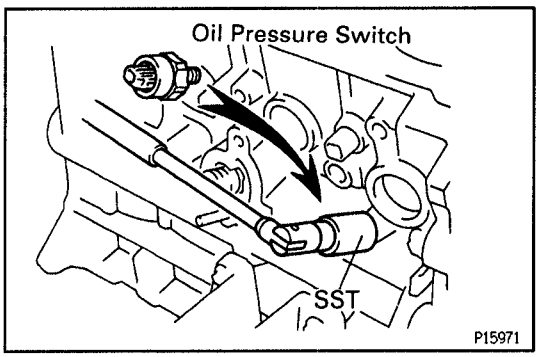

4. **INSTALL OIL PRESSURE SWITCH**

(a) Apply adhesive to 2 or 3 threads of the oil pressure switch.
Adhesive:
Part No. 08833–00080, THREE BOND 1344, LOCTITE 242 or equivalent

(b) Using SST, install the oil pressure switch.
SST 09816–30010

5. **INSTALL ENGINE COOLANT DRAIN COCK**
Torque: 24.5 N·m (250 kgf·cm, 18 ft·lbf)

6. **OIL FILTER BRACKET**

A. 2RZ–FE:

(a) Install a new O–ring to the union bolt.

(b) Install a new gasket, the union bolt, nut and oil filter bracket.
Torque:
Union bolt: 68.5 N·m (700 kgf·cm, 51 ft·lbf)
Nut: 12 N·m (120 kgf·cm, 8.9 ft·lbf)

B. 3RZ–FE:

(a) Install a new O–ring to the union.

(b) Using a 14 mm hexagon wrench, install the union.
Torque: 24.5 N·m (250 kgf·cm, 18 ft·lbf)

(c) Install a new O–ring and the oil filter bracket with the 2 bolts and nut.
Torque: 28 N·m (290 kgf·cm, 21 ft·lbf)

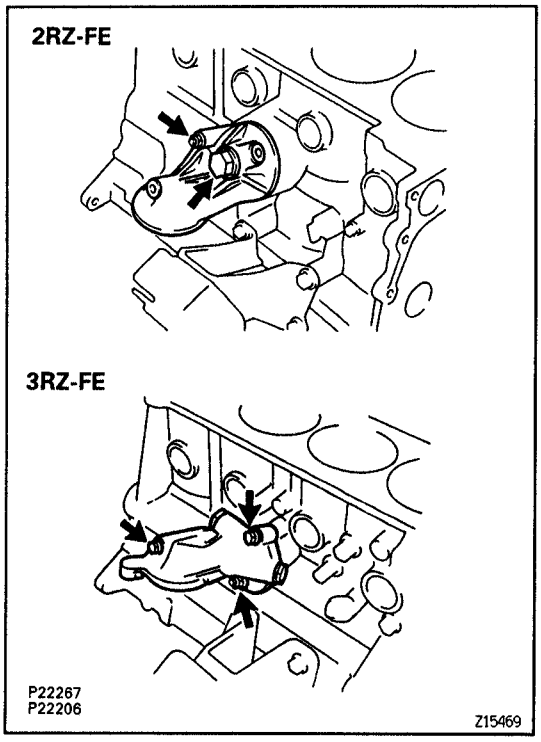

7. **INSTALL OIL FILTER**
(See oil and filter replacement in Lubrication System)

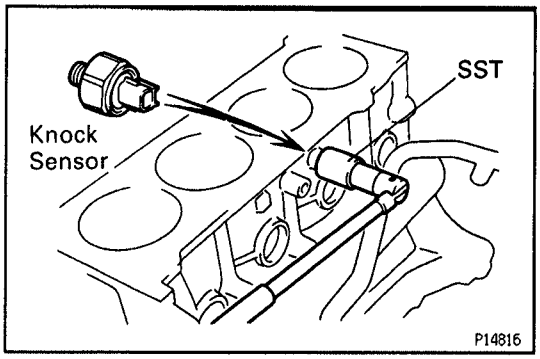

8. INSTALL WATER BYPASS PIPE
Torque: 20 N·m (200 kgf·cm, 14 ft·lbf)

9. INSTALL KNOCK SENSOR
Using SST, install the knock sensor.
SST 09816–30010
Torque: 37 N·m (380 kgf·cm, 27 ft·lbf)

10. INSTALL FUEL FILTER
Torque: 20 N·m (200 kgf·cm, 14 ft·lbf)

11. INSTALL TIMING CHAINS, GEARS AND SPROCKETS
(See timing chain installation)

12. INSTALL CYLINDER HEAD
(See cylinder head installation)

13. REMOVE ENGINE STAND

14. INSTALL REAR END PLATE
Install the rear end plate with the 3 bolts.
Torque:
Bolt A: 18 N·m (185 kgf·cm, 13 ft·lbf)
Bolt B: 20 N·m (200 kgf·cm, 14 ft·lbf)

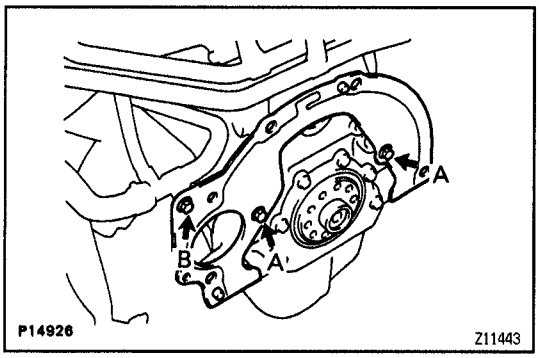

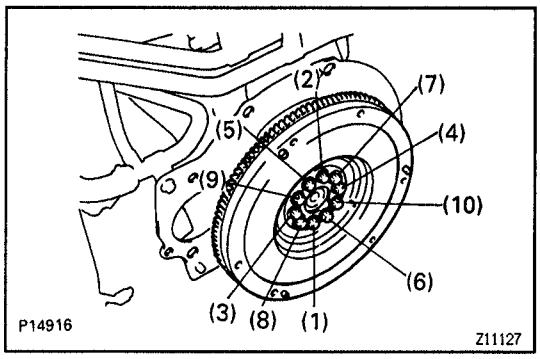

15. M/T:
INSTALL FLYWHEEL

A. 2RZ–FE:
Install and uniformly tighten 10 new bolts to the flywheel, in several passes, in the sequence shown.
Torque: 88 N·m (900 kgf·cm, 65 ft·lbf)

B. 3RZ–FE:
(a) Install and uniformly tighten 10 new bolts to the flywheel, in several passes, in the sequence shown.
Torque: 26.5 N·m (270 kgf·cm, 19 ft·lbf)
(b) Mark the top of the flywheel bolt with paint.
(c) Retighten the flywheel bolts by 90° in the numerical order shown above.
(d) Check that the painted mark is now at a 90° angle to the top.

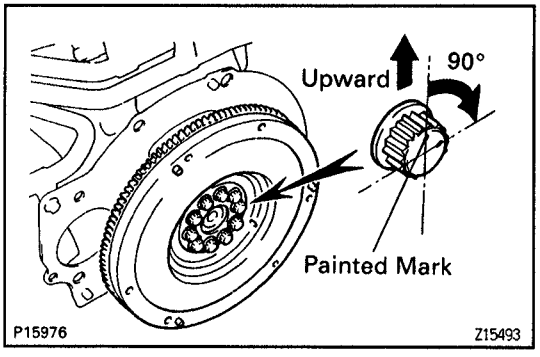

16. A/T:
INSTALL DRIVE PLATE

(a) Apply adhesive to 2 or 3 threads of the bolt end.
Adhesive:
Part No. 08833–00070, THREE BOND 1324 or equivalent
(b) Install the front spacer, drive plate and rear plate with the 10 bolts.
Torque: 74 N·m (750 kgf·cm, 54 ft·lbf)

EG3LY–07

2WD: ENGINE AND TRANSMISSION ASSEMBLY

(See Components for Engine and Transmission Separation (2WD))

EG64P–01

2WD: ENGINE WITH TRANSMISSION INSTALLATION

EG

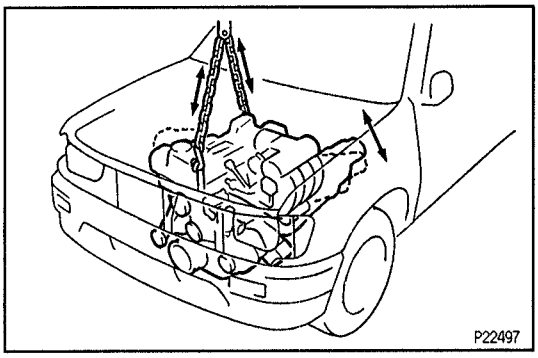

1. INSTALL ENGINE AND TRANSMISSION ASSEMBLY IN VEHICLE

(a) Attach the engine hoist chain to the engine hangers.

(b) Lower the engine and transmission assembly into the engine compartment.

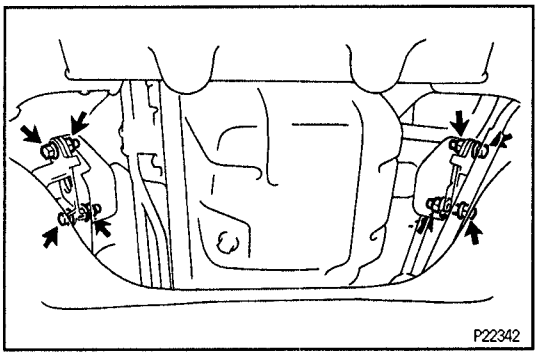

(c) Keep the engine level, and align the RH and LH mountings and body mountings.

(d) Attach the RH and LH mounting insulators to the body mountings, and temporarily install the 4 bolts and nuts.

(e) Jack up and put the transmission onto the frame.

(f) Remove the hoist chain.

(g) Remove the bolt and rear engine hanger.

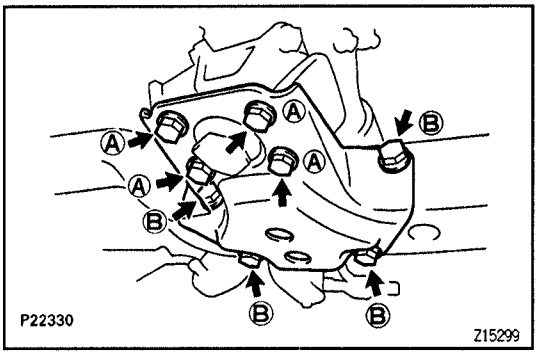

2. INSTALL ENGINE REAR MOUNTING BRACKET

Torque:

Bolt Ⓐ: 18 N·m (183 kgf·cm, 13 ft·lbf)

Bolt Ⓑ: 25 N·m (260 kgf·cm, 19 ft·lbf)

3. TIGHTEN RH AND LH ENGINE MOUNTING INSULATOR BOLTS AND NUTS

Tighten the 4 bolts and nuts holding the mounting insulators to the body mountings.

Torque: 38 N·m (387 kgf·cm, 28 ft·lbf)

4. CONNECT STARTER WIRE

5. M/T: INSTALL CLUTCH RELEASE CYLINDER

(a) Connect the clutch line with the bolt.

Torque: 39 N·m (400 kgf·cm, 29 ft·lbf)

(b) Install the clutch release cylinder with the 2 bolts.

Torque: 13 N·m (130 kgf·cm, 9 ft·lbf)

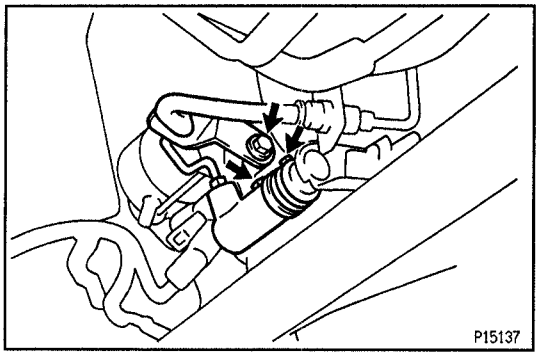

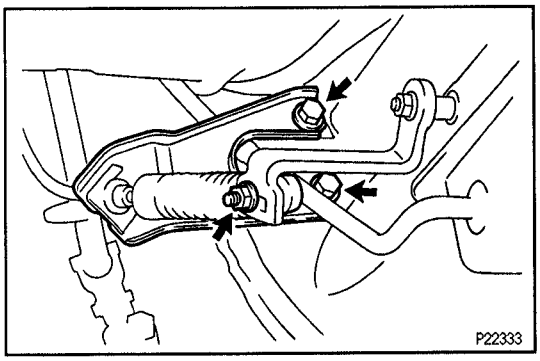

6. **A/T:**
   INSTALL CROSS SHAFT
   Torque:
   Bolt: 39 N·m (400 kgf·cm, 29 ft·lbf)
   Nut: 18 N·m (183 kgf·cm, 13 ft·lbf)

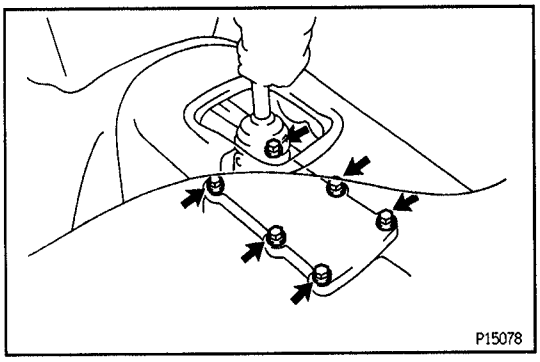

7. **CONNECT SPEEDOMETER CABLE**
8. **INSTALL PROPELLER SHAFT**
   (See propeller shaft installation in Propeller Shaft)
9. **M/T:**
   INSTALL SHIFT LEVER ASSEMBLY

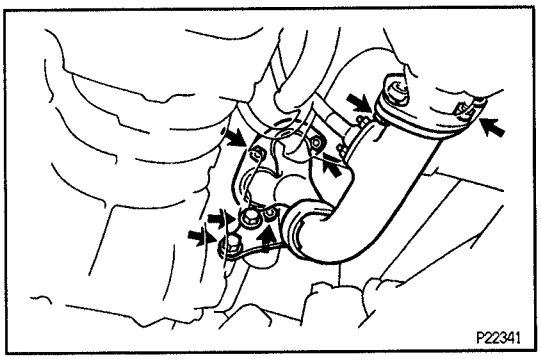

10. **INSTALL FRONT EXHAUST PIPE**
(a) Install 2 new gaskets and the front exhaust pipe assembly with new 3 nuts.
Torque: 62 N·m (630 kgf·cm, 46 ft·lbf)
(b) Install the support bracket with the 2 bolts.
Torque: 39 N·m (400 kgf·cm, 29 ft·lbf)
(c) Connect a new gasket and the front exhaust pipe assembly to the TWC with the 2 bolts and nuts.
Torque: 39 N·m (400 kgf·cm, 29 ft·lbf)
(d) Connect the heated oxygen sensor connector.
11. **CONNECT ENGINE WIRE TO CABIN**
12. **CONNECT GENERATOR WIRE**
13. **w/ PS:**
    CONNECT PS PUMP
    (See step 30 in cylinder head installation)
14. **CONNECT HOSES**
    Connect these hoses:
    - Fuel return hose
    - Fuel inlet hose
    - Brake booster vacuum hose
    - EVAP hose
    - w/ PS:
      2 air hoses for PS idle–up
15. **CONNECT HEATER HOSES**
16. **w/A/C:**
    INSTALL A/C COMPRESSOR
    Torque: 25 N·m (250 kgf·cm, 18 ft·lbf)
17. **INSTALL INTAKE AIR CONNECTOR**
    Torque: 18 N·m (185 kgf·cm, 13 ft·lbf)

18. INSTALL AIR CLEANER ASSEMBLY

19. CONNECT THESE CABLES:

(a) Connect the throttle cable to the throttle body.

(b) w/ Cruise Control System:
Connect the cruise control cable to the actuator, and install the actuator cover.

20. INSTALL RADIATOR
(See radiator installation in Cooling System)

21. FILL WITH ENGINE OIL

22. FILL WITH ENGINE COOLANT

23. FILL TRANSMISSION OIL

24. START ENGINE AND CHECK FOR LEAKS

25. INSTALL ENGINE UNDER COVER

26. INSTALL HOOD

27. VEHICLE ROAD TEST
Check for abnormal noise, shock, slippage, and smooth operation.

28. RECHECK ENGINE COOLANT AND ENGINE OIL LEVELS

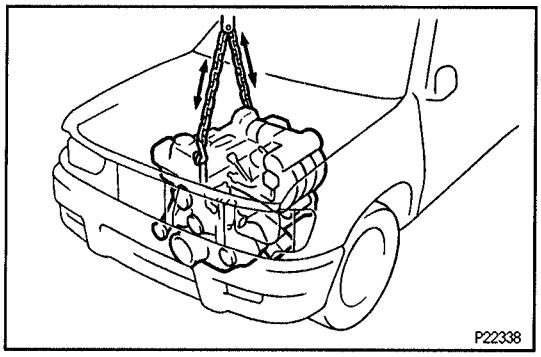
P22338

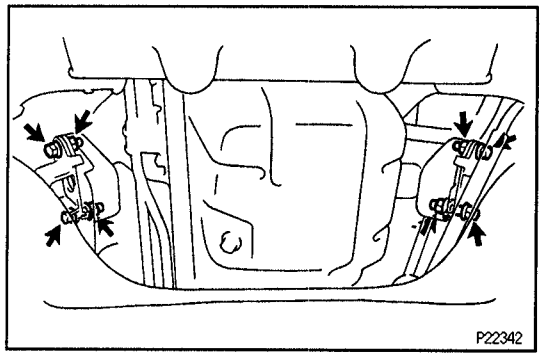
P22342

EG5N5–02

4WD:
ENGINE INSTALLATION

1. INSTALL ENGINE IN VEHICLE

(a) Attach the engine hoist chain to the engine hangers.

(b) Lower the engine into the engine compartment.

(c) Keep the engine level, and align the RH and LH mountings and body mountings.

(d) Attach the RH and LH mounting insulators to the body mountings, and temporarily install the 4 bolts and nuts.

(e) Remove the hoist chain.

(f) Remove the bolt and rear engine hanger.

2. TIGHTEN RH AND LH ENGINE MOUNTING INSULATOR BOLTS AND NUTS
Tighten the 4 bolts and nuts holding the mounting insulators to the body mountings.
Torque: 38 N·m (387 kgf·cm, 28 ft·lbf)

3. CONNECT ENGINE WIRE TO CABIN

4. CONNECT GENERATOR WIRE

5. w/ PS:
CONNECT PS PUMP
(See step 31 in cylinder head installation)

6. CONNECT HOSES
Connect these hoses:
- Fuel return hose
- Fuel inlet hose
- w/ A.D.D.
  Vacuum hose

- Brake booster vacuum hose
- EVAP hose
- 2 air hoses for PS idle–up

7. CONNECT HEATER HOSES

8. w/A/C:
INSTALL A/C COMPRESSOR
Torque: 25 N·m (250 kgf·cm, 18 ft·lbf)

9. INSTALL INTAKE AIR CONNECTOR
Torque: 18 N·m (185 kgf·cm, 13 ft·lbf)

10. INSTALL AIR CLEANER ASSEMBLY

11. CONNECT THESE CABLES:

(a) Connect the throttle cable to the throttle body.

(b) w/ Cruise Control System:
Connect the cruise control cable to the actuator, and install the actuator cover.

12. INSTALL RADIATOR
(See radiator installation in Cooling System)

13. FILL WITH ENGINE OIL

14. FILL WITH ENGINE COOLANT

EG5N6–02

4WD:

TRANSMISSION INSTALLATION
(See M/T or A/T section)

EXHAUST SYSTEM
COMPONENTS

EG5N7–02

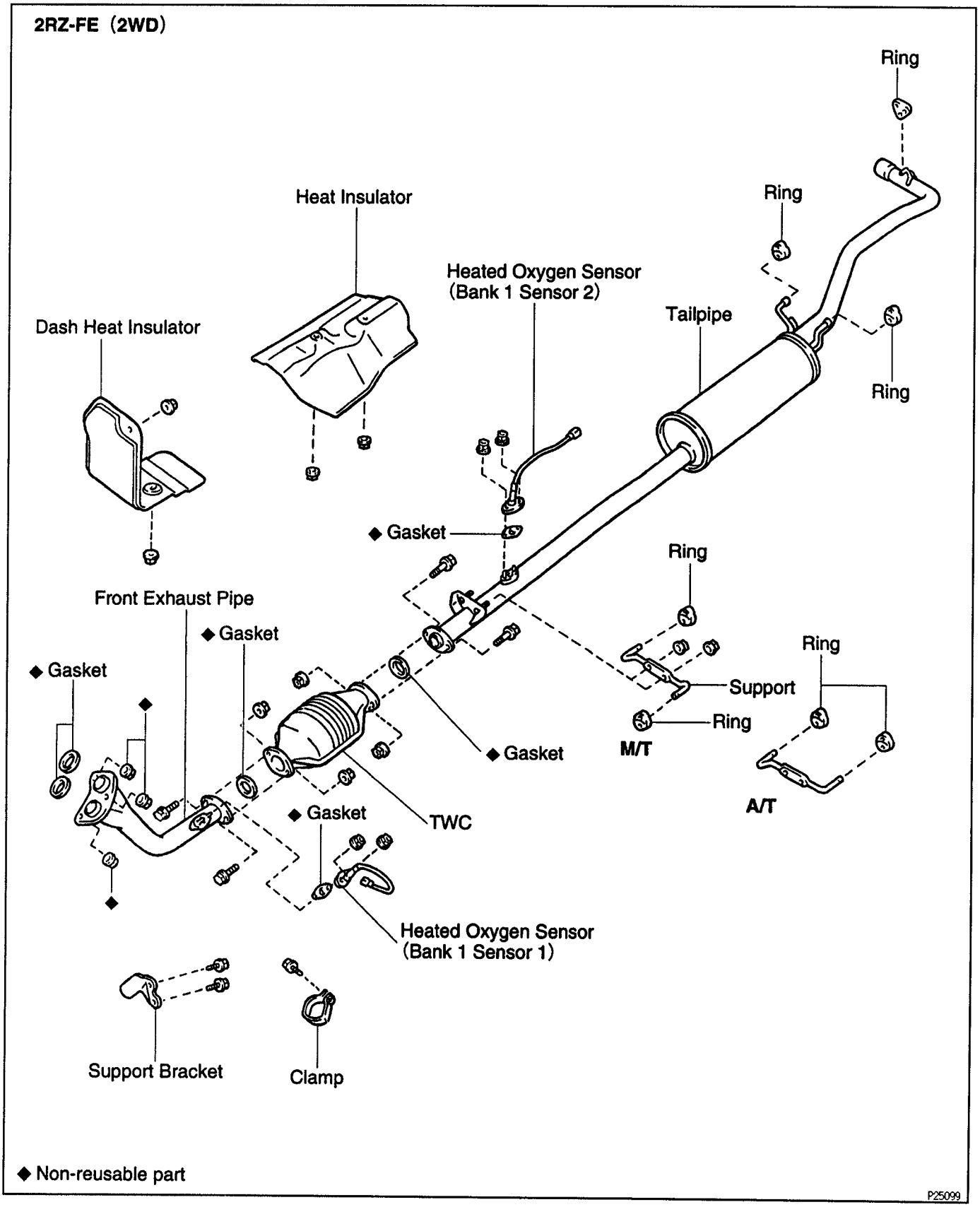

3RZ-FE (4WD)

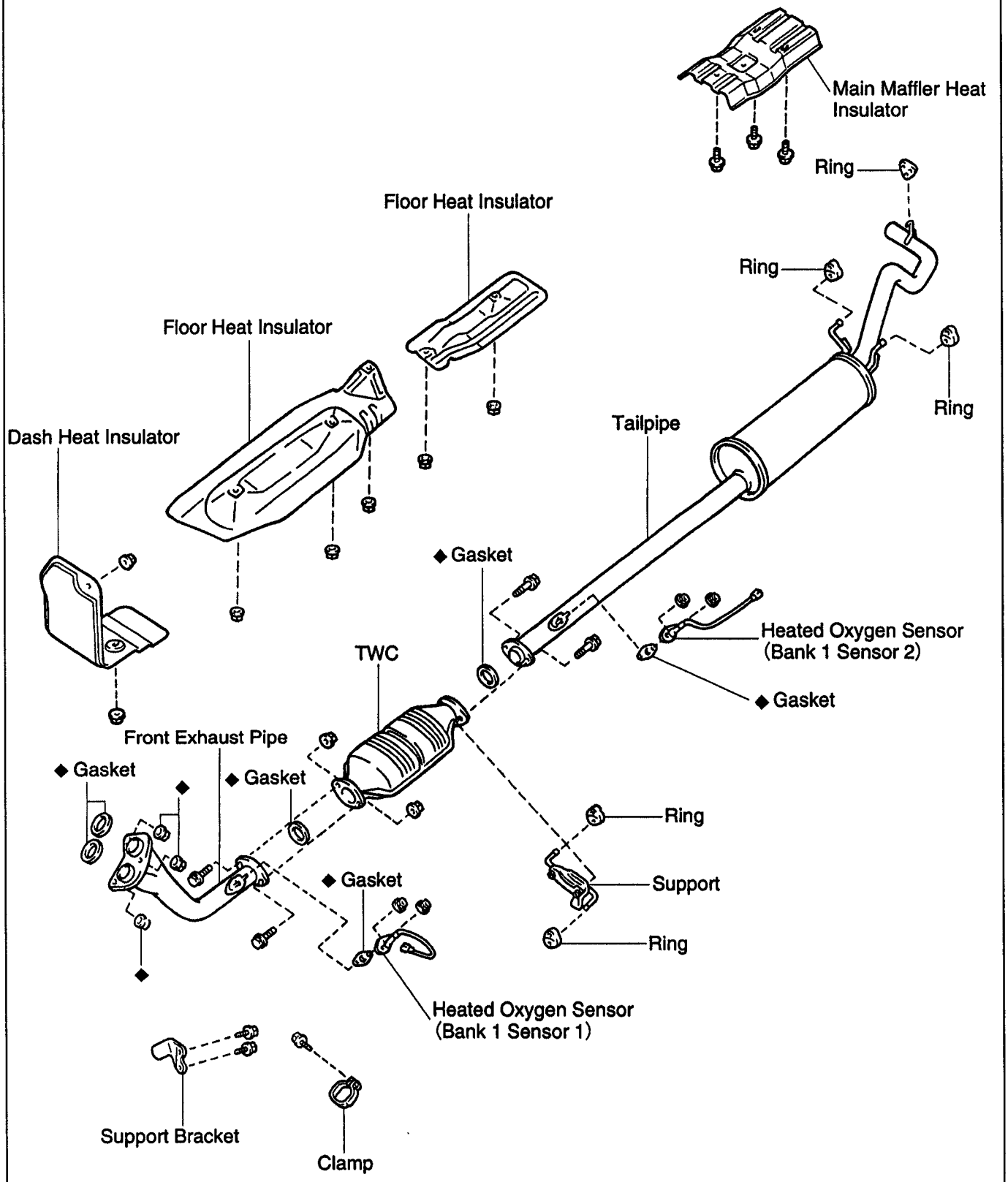

◆ Non-reusable part

P25098

SERVICE SPECIFICATIONS

SERVICE DATA

EQ0VT–0K

EG

Compression pressure	at 250 rpm	STD	1,230 kPa (12.5 kgf/cm², 178 psi) or more
		Minimum	880 kPa (9.0 kgf/cm², 127 psi)
	Difference of pressure between each cylinder		98 kPa (1.0 kgf/cm², 14 psi) or less
Valve clearance		Intake	0.15 – 0.25 mm (0.006 – 0.010 in.)
		Exhaust	0.25 – 0.35 mm (0.010 – 0.014 in.)
	Adjusting shim (for repair part)	Mark 2.500	2.500 mm (0.0984 in.)
		Mark 2.550	2.550 mm (0.1004 in.)
		Mark 2.600	2.600 mm (0.1024 in.)
		Mark 2.650	2.650 mm (0.1043 in.)
		Mark 2.700	2.700 mm (0.1063 in.)
		Mark 2.750	2.750 mm (0.1083 in.)
		Mark 2.800	2.800 mm (0.1102 in.)
		Mark 2.850	2.850 mm (0.1122 in.)
		Mark 2.900	2.900 mm (0.1142 in.)
		Mark 2.950	2.950 mm (0.1161 in.)
		Mark 3.000	3.000 mm (0.1181 in.)
		Mark 3.050	3.050 mm (0.1201 in.)
		Mark 3.100	3.100 mm (0.1220 in.)
		Mark 3.150	3.150 mm (0.1240 in.)
		Mark 3.200	3.200 mm (0.1260 in.)
		Mark 3.250	3.250 mm (0.1280 in.)
		Mark 3.300	3.300 mm (0.1299 in.)
Ignition timing	w/ Terminals TE1 and E1 connected of DLC1		3 – 7° BTDC @ idle
Idle speed	Engine at normal operating temperature		650 – 750 rpm
Cylinder head	Warpage		
	Cylinder block side	Maximum	0.05 mm (0.0020 in.)
	Manifold side	Maximum	0.10 mm (0.0039 in.)
	Valve seat		
	Refacing angle	Intake	30°, 45°, 60°
		Exhaust	45°, 60°
	Contacting angle		45°
	Contacting width		1.0 – 1.4 mm (0.039 – 0.055 in.)
	Cylinder head bolt outside diameter	STD	10.76 – 10.97 mm (0.4236 – 0.4319 in.)
		Minimum	10.40 mm (0.4094 in.)
Valve guide bushing	Inside diameter		6.010 – 6.030 mm (0.2366 – 0.2374 in.)
	Outside diameter (for repair part)	STD	11.000 – 11.027 mm (0.4331 – 0.4341 in.)
		O/S 0.05	11.050 – 11.077 mm (0.4350 – 0.4361 in.)
	Protrusion height		8.2 – 8.6 mm (0.323 – 0.339 in.)
	Replacing temperature (Cylinder head side)		80 – 100°C (176 –212°F)

Valve	Valve overall length	STD	Intake	103.45 mm (4.0728 in.)
			Exhaust	103.60 mm (4.0787 in.)
		Minimum	Intake	102.95 mm (4.0531 in.)
			Exhaust	103.10 mm (4.0590 in.)
	Valve face angle			44.5°
	Stem diameter		Intake	5.970 – 5.985 mm (0.2350 – 0.2356 in.)
			Exhaust	5.965 – 5.980 mm (0.2348 – 0.2354 in.)
	Stem oil clearance	STD	Intake	0.025 – 0.060 mm (0.0010 – 0.0024 in.)
			Exhaust	0.030 – 0.065 mm (0.0012 – 0.0026 in.)
		Maximum	Intake	0.08 mm (0.0031 in.)
			Exhaust	0.10 mm (0.0039 in.)
	Margin thickness		STD	1.0 mm (0.039 in.)
			Minimum	0.5 mm (0.020 in.)
Valve spring	Deviation		Maximum	2.0 mm (0.079 in.)
	Installed tension	at 35.7 mm (1.406 in.)		177 – 204 N (18.0 – 20.8 kgf, 39.7 – 45.9 lbf)
Valve lifter	Lifter diameter			30.966 – 30.976 mm (1.1578 – 1.2195 in.)
	Lifter bore diameter			31.000 – 31.016 mm (1.2205 – 1.2211 in.)
	Oil clearance		STD	0.024 – 0.050 mm (0.0009 – 0.0020 in.)
			Maximum	0.07 mm (0.0028 in.)
Manifold	Warpage	Maximum	Intake	0.20 mm (0.0078 in.)
			Exhaust	0.50 mm (0.0197 in.)
Air intake chamber	Warpage		Maximum	0.20 mm (0.0078 in.)
Camshaft	Thrust clearance		STD	0.040 – 0.095 mm (0.0016 – 0.0037 in.)
			Maximum	0.12 mm (0.0047 in.)
	Journal oil clearance		STD	0.025 – 0.062 mm (0.0010 – 0.0024 in.)
			Maximum	0.08 mm (0.0031 in.)
	Journal diameter			26.959 – 26.975 mm (1.0614 – 1.0620 in.)
	Circle runout		Maximum	0.06 mm (0.0024 in.)
	Cam lobe height		Intake	45.31 – 45.41 mm (1.7839 – 1.7878 in.)
			Exhaust	45.06 – 45.16 mm (1.7740 – 1.7779 in.)
	Camshaft gear backlash		STD	0.020 –0.200 mm (0.0008 – 0.0079 in.)
			Maximum	0.30 mm (0.0188 in.)
	Camshaft gear spring end free distance			22.5 – 22.9 mm (0.886– 0.902 in.)
Spark plug tube	Protrusion			47.0 mm (1.850 in.)
Chain and timing gear	Chain length at 16 links		Maximum (No.1)	147.5 mm (5.807 in.)
			(No.2)	123.6 mm (4.866 in.)
	Camshaft timing gear wear (w/ chain)		Minimum	113.8 mm (4.480 in.)
	Crankshaft timing gear wear (w/ chain)		Minimum	59.4 mm (2.339 in.)
	Balance shaft drive gear wear (w/ chain)		Minimum	75.9 mm (2.988 in.)
	No.2 crankshaft timing sprocket wear (w/ chain)		Minimum	96.7 mm (3.807 in.)
Chain tensioner slipper and vibration damper	Wear		Maximum	1.0 mm (0.039 in.)

Cylinder block	Cylinder head surface warpage	Maximum	0.05 mm (0.0020 in.)
	Cylinder bore diameter	STD	94.990 − 95.003 mm (3.7400 − 3.7403 in.)
		Maximum	95.06 mm (3.7425 in.)
	Main bearing bolt outside diameter	STD	10.76 − 10.97 mm (0.4236 − 0.4319 in.)
		Minimum	10.40 mm (0.4094 in.)
	Cylinder block main journal bore diameter		
		STD Mark 1	64.004 − 64.010 mm (2.5198 − 2.5201 in.)
		Mark 2	64.011 − 64.016 mm (2.5201 − 2.5203 in.)
		Mark 3	64.017 − 64.022 mm (2.5203 − 2.5205 in.)
		U/S 0.25	64.000 − 64.024 mm (2.5197 − 2.5206 in.)
Piston and piston ring	Piston diameter		
	2RZ−FE	STD	94.923 − 94.933 mm (3.7371 − 3.7375 in.)
		O/S 0.50	95.423 − 95.433 mm (3.7568 − 3.7572 in.)
	3RZ−FE	STD	94.933 − 94.943 mm (3.7375 − 3.7379 in.)
		O/S 0.50	95.433 − 95.443 mm (3.7572 − 3.7576 in.)
	Piston oil clearance		
	2RZ−FE		0.057 − 0.080 mm (0.0022 − 0.0031 in.)
	3RZ−FE		0.047 − 0.070 mm (0.0019 − 0.0028 in.)
	Piston ring groove clearance	No.1	0.020 − 0.070 mm (0.0008 − 0.0028 in.)
		No.2	0.030 − 0.070 mm (0.0012 − 0.0028 in.)
	Piston ring end gap	No.1	0.300 − 0.400 mm (0.0118 − 0.0157 in.)
		No.2	0.400 − 0.500 mm (0.0157 − 0.0197 in.)
	Piston pin installing temperature		80 − 90°C (176 − 194°F)
Connecting rod	Thrust clearance	STD	0.160 − 0.312 mm (0.0063 − 0.0123 in.)
		Maximum	0.35 mm (0.0138 in.)
	Connecting rod bearing center wall thickness		
		STD Mark 4	1.482 − 1.485 mm (0.0583 − 0.0585 in.)
		Mark 5	1.485 − 1.488 mm (0.0585 − 0.0586 in.)
		Mark 6	1.488 − 1.491 mm (0.0586 − 0.0587 in.)
		U/S 0.25	1.601 − 1.607 mm (0.0630 − 0.0633 in.)
	Connecting rod big end inside diameter		
		STD Mark 4	56.000 − 56.006 mm (2.2047 − 2.2050 in.)
		Mark 5	56.006 − 56.012 mm (2.2050 − 2.2052 in.)
		Mark 6	56.012 − 56.018 mm (2.2052 − 2.2054 in.)
		U/S 0.25	56.000 − 56.018 mm (2.2047 − 2.2054 in.)
	Connecting rod oil clearance	STD	0.030 − 0.055 mm (0.0012 − 0.0022 in.)
		U/S 0.25	0.031 − 0.071 mm (0.0012 − 0.0026 in.)
		Maximum	0.10 mm (0.0039 in.)
	Rod out−of−alignment		
		Maximum per 100 mm (3.94 in.)	0.05 mm (0.0020 in.)
	Rod twist	Maximum per 100 mm (3.94 in.)	0.15 mm (0.0059 in.)
	Bushing inside diameter		24.008 − 24.017 mm (0.9452 − 0.9455 in.)
	Piston pin diameter		24.000 − 24.009 mm (0.9449 − 0.9452 in.)
	Piston pin oil clearance	STD	0.005 − 0.011 mm (0.0002 − 0.0004 in.)
		Maximum	0.015 mm (0.0006 in.)
	Connecting rod bolt outside diameter	STD	7.80 − 7.90 mm (0.3071 − 0.3110 in.)
		Minimum	7.60 mm (0.2992 in.)

Crankshaft	Thrust clearance	STD	0.020 − 0.0220 mm (0.0008 − 0.0087 in.)
		Maximum	0.30 mm (0.0118 in.)
	Thrust washer thickness		2.440 − 2.490 mm (0.0961 − 0.0980 in.)
	Main journal oil clearance	STD No.3	0.030 − 0.055 mm (0.0012 − 0.0022 in.)
		Others	0.024 − 0.049 mm (0.0009 − 0.0019 in.)
		U/S 0.25 No.3	0.030 − 0.070 mm (0.0012 − 0.0028 in.)
		Others	0.025 − 0.065 mm (0.0010 − 0.0026 in.)
		Maximum	0.10 mm (0.0039 in.)
	Main journal diameter	STD No.3	59.981 − 59.994 mm (2.2615 − 2.3620 in.)
		Others	59.987 − 60.000 mm (2.3617 − 2.3622 in.)
		U/S 0.25 No.3	59.740 − 59.750 mm (2.3520 − 2.3524 in.)
		Others	59.745 − 59.755 mm (2.3522 − 2.3526 in.)
	Main bearing center wall thickness		
		STD Mark 1	1.987 − 1.990 mm (0.0782 − 0.0783 in.)
		Mark 2	1.991 − 1.993 mm (0.0784 − 0.0785 in.)
		Mark 3	1.994 − 1.996 mm (0.0785 − 0.0786 in.)
		U/S 0.25	2.106 − 2.112 mm (0.0829 − 0.0831 in.)
	Crank pin diameter	STD	52.987 − 53.000 mm (2.0861 − 2.0866 in.)
		U/S 0.25	52.745 − 52.755 mm (2.0766 − 2.0770 in.)
	Circle runout	Maximum	0.03 mm (0.0012 in.)
	Main journal taper and out−of−round	Maximum	0.005 mm (0.0002 in.)
	Crank pin taper and out−of−round	Maximum	0.005 mm (0.0002 in.)
Balance shaft	Thrust clearance	STD	0.07 − 0.13 mm (0.0027 − 0.0051 in.)
		Maximum	0.20 mm (0.0079 in.)
	Bearing inside diameter	No.1	38.025 − 38.045 mm (1.4970 − 1.4978 in.)
		No.2	37.525 − 37.545 mm (1.4774 − 1.4781 in.)
	Journal diameter	No.1	37.969 − 37.985 mm (1.4948 − 1.4955 in.)
		No.2	37.449 − 37.465 mm (1.4744 − 1.4750 in.)
	Journal oil clearance	STD No.1	0.040 − 0.076 mm (0.0016 − 0.0031 in.)
		No.2	0.060 − 0.096 mm (0.0024 − 0.0038 in.)
		Maximum	0.15 mm (0.0059 in.)

EGOVU-OH

TORQUE SPECIFICATIONS

Part tightened		N·m	kgf·cm	ft·lbf
Spark plug x Cylinder head		19	200	14
Cylinder head x Cylinder block	1st	39	400	29
	2nd	Turn 90°	Turn 90°	Turn 90°
	3rd	Turn 90°	Turn 90°	Turn 90°
Cylinder head x Timing chain cover		21	210	15
Camshaft bearing cap x Cylinder head		15.5	160	12
Camshaft timing gear x Intake camshaft		73.5	750	54
Distributor gear x Exhaust camshaft		46	470	34
No.1 chain tensioner x Cylinder head		21	210	15
Engine hanger x Cylinder head		42	420	30
Cylinder head rear cover x Cylinder head		13.5	135	10
Water outlet x Cylinder head		20	200	14
Exhaust manifold x Cylinder head		49	500	36
Heat insulator x Exhaust manifold		5.5	55	48 in.·lbf
Intake manifold x Cylinder head		29	300	22
Fuel inlet pipe x Fuel filter		29	300	22
Air intake chamber x Intake manifold		21	210	15
Fuel inlet pipe x Delivery pipe		29	300	22
Intake chamber stay x Air intake chamber		20	200	15
Intake chamber stay x LH engine mounting bracket		20	200	15
EGR pipe x EGR valve		19	195	14
EGR pipe x Exhaust manifold		20	200	15
EGR pipe x Cylinder head		18	185	13
PS pump bracket x Cylinder head		20	200	15
PS pump bracket x PS pump		58	590	43
PS pump x PS pump pulley		43	440	32
Drive belt idler pulley for PS pump x Cylinder head		20	200	14
Oil dipstick guide x Cylinder head		20	200	15
Intake air connector x Cylinder head		18	185	13
Balance shaft drive gear x Balance shaft		25	250	18
No.2 chain tensioner x Cylinder block		18	185	13
No.3 vibration damper x Cylinder block		18	185	13
No.2 vibration damper x Cylinder block		27	270	20
Oil jet x Cylinder block		18	185	13
No.1 vibration damper x Cylinder block		29	300	22
No.1 timing chain tensioner slipper x Cylinder block		27	270	20
Timing chain cover x Cylinder block	12 mm head bolt A	20	200	14
	bolt B	24.5	250	18
	14 mm head bolt	44	440	32
	Nut	20	200	14
Timing chain cover mounting bolt		18	185	13
Water bypass pipe mounting nut		20	200	14
Crankshaft pulley x Crankshaft		260	2,650	193
No.2 crankshaft pulley x Crankshaft pulley		25	250	18
No.3 crankshaft pulley x Crankshaft pulley		25	250	18
Oil strainer x Cylinder block		18	185	13
Oil pan x Cylinder block		12.5	130	9

Stiffener plate x Cylinder block		37	380	27
Stiffener plate x Transmission		37	380	27
Crankshaft position sensor x Timing chain cover		8.5	85	74 in.·lbf
Generator bracket x Cylinder block		74.5	760	55
Generator bracket x Timing chain cover		18	185	13
Generator adjusting bar x Timing chain cover		63.5	650	47
A/C compressor bracket x Cylinder block		44	440	32
A/C compressor x A/C compressor bracket		25	250	18
Connecting rod cap x Connecting rod	1st	45	460	33
	2nd	Turn 90°	Turn 90°	Turn 90°
Main bearing cap x Cylinder block	1st	39	400	29
	2nd	Turn 90°	Turn 90°	Turn 90°
No.1 balance shaft x Timing gear		36	365	26
No.2 balance shaft x Timing sprocket		36	365	26
Balance shaft x Cylinder block		18	185	13
Rear oil seal retainer x Cylinder block		13.5	135	9.7
Engine mounting bracket x Cylinder block		52	520	38
Engine coolant drain plug x Cylinder block		24.5	250	18
Oil filter bracket union x Cylinder block		25	250	18
Oil filter bracket (2RZ–FE) x Cylinder block	Nut	12	120	8.9
	Union bolt	68.5	700	51
Oil filter bracket (3RZ–FE) x Cylinder block		28	290	21
Water bypass pipe x Cylinder block		20	200	14
Knock sensor x Cylinder block		37	380	27
Fuel filter x Cylinder block		20	200	14
Rear end plate x Cylinder block		18	185	13
Rear end plate x Water bypass pipe		20	200	14
Flywheel (2RZ–FE) x Crankshaft		88	900	65
Flywheel (3RZ–FE) x Crankshaft	1st	26.5	270	19
	2nd	Turn 90°	Turn 90°	Turn 90°
Drive plate x Crankshaft		74	750	54
Engine rear mounting bracket x Front crossmember		25	260	19
Engine rear mounting bracket x Engine rear mounting insulator		18	183	13
Engine front mounting insulator x Frame		38	387	28
Clutch release cylinder bracket x Transmission		39	400	29
Clutch release cylinder x Transmission		13	130	9
Front exhaust pipe x Exhaust manifold		62	630	46
Exhaust support bracket x Transmission		71	720	52
Front exhaust pipe x TWC		48	490	35
TWC x Tail pipe		48	490	35
Heated oxygen sensor (Bank 1 sensor 1) x Front exhaust pipe		20	200	14
Heated oxygen sensor (Bank 1 sensor 2) x Tail pipe		20	200	14

EMISSION CONTROL SYSTEMS

SYSTEM PURPOSE

EG5C7–03

The emission control systems are installed to reduce the amount of CO, HC and NOx exhausted from the engine ((3), (4) and (5)), to prevent the atmospheric release of blow–by gas–containing HC (1) and evaporated fuel containing HC being released from the fuel tank (2).
The function of each system is shown in these table.

EG

System	Abbreviation	Function
(1) Positive Crankcase Ventilation	PCV	Reduces blow–by gas (HC)
(2) Evaporative Emission Control	EVAP	Reduces evaporated HC
(3) Exhaust Gas Recirculation	EGR	Reduces NOx
(4) Three–Way Catalytic Converter	TWC	Reduces CO, HC and NOx
(5) Multiport Fuel Injection *	MFI	Injects a precisely timed, optimum amount of fuel for reduced exhaust emissions

Remark: * For inspection and repair of the MFI system, refer to the MFI section this manual.

PREPARATION

EQ0SW–00

EQUIPMENT

OBD II scan tool	Engine speed
Torque wrench	
Vacuum gauge	

LAYOUT AND SCHEMATIC DRAWING

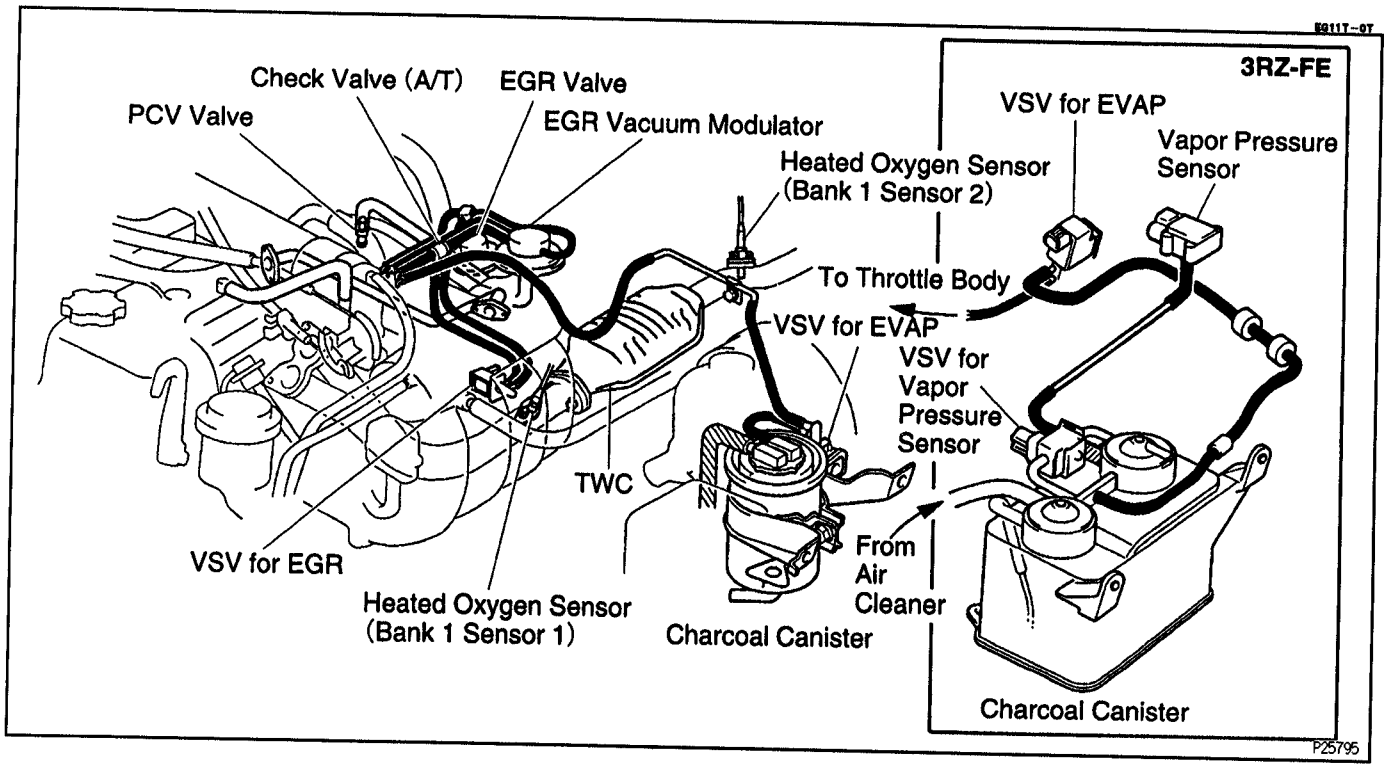

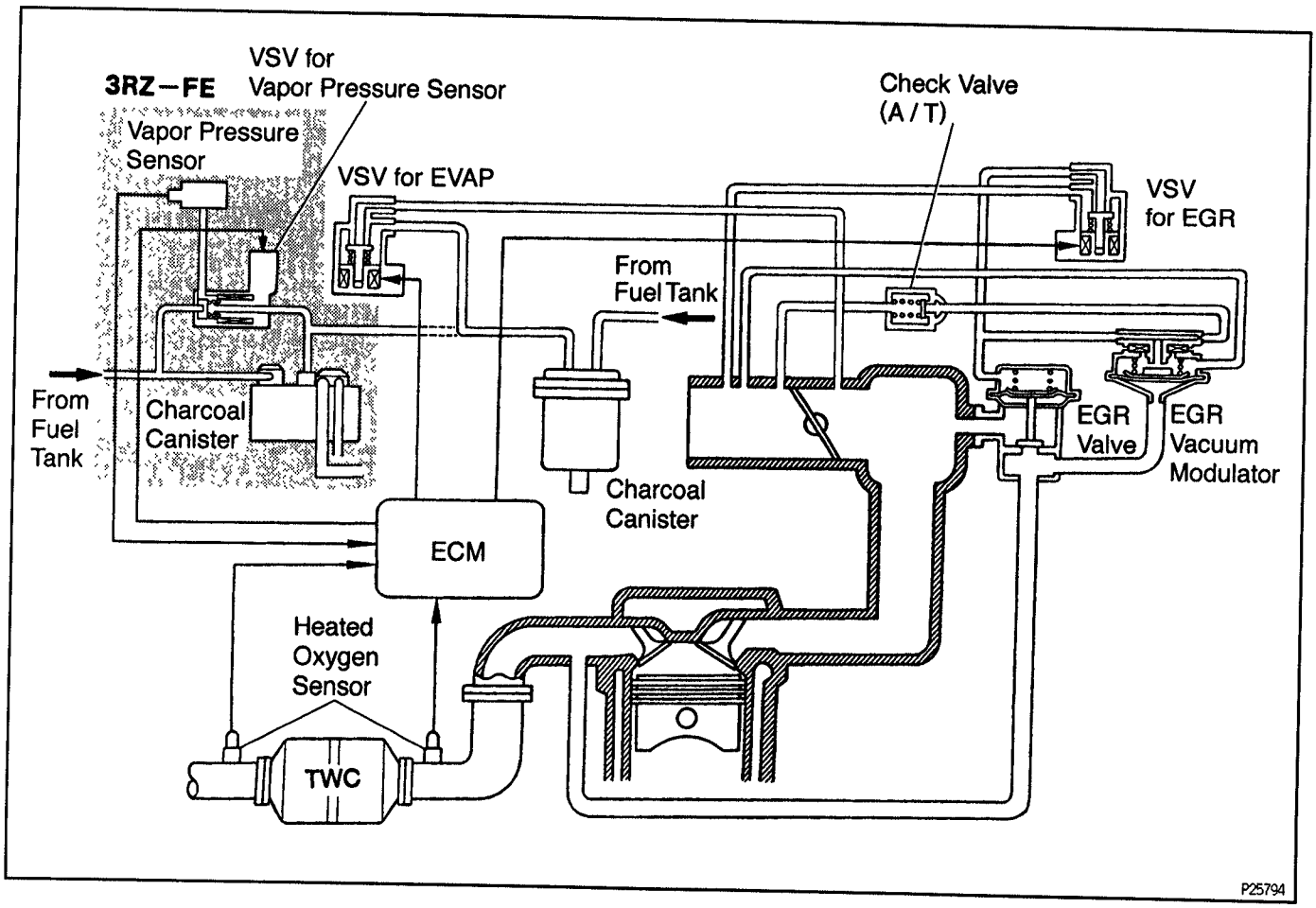

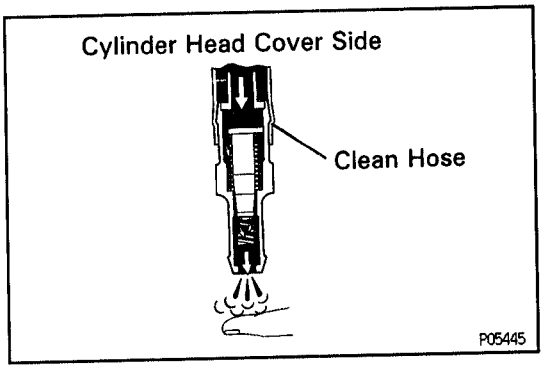

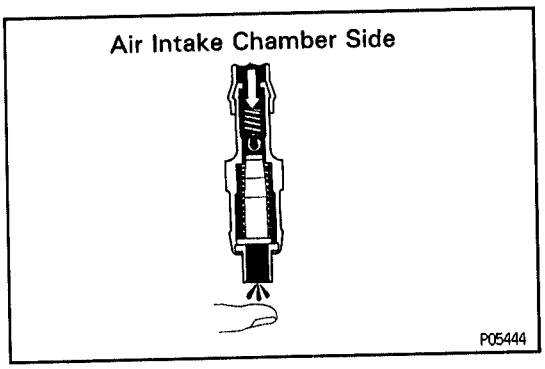

POSITIVE CRANKCASE VENTILATION (PCV) SYSTEM

EG061-0D

PCV VALVE INSPECTION

1. **REMOVE PCV VALVE**
2. **INSTALL CLEAN HOSE TO PCV VALVE**
3. **INSPECT PCV VALVE OPERATION**

(a) Blow air into the cylinder head cover side, and check that air passes through easily.

CAUTION: Do not suck air through the valve. Petroleum substances inside the valve are harmful.

(b) Blow air into the air intake chamber side, and check that air passes through with difficulty.

If operation is not as specified, replace the PCV valve.

4. **REMOVE CLEAN HOSE FROM PCV VALVE**
5. **REINSTALL PCV VALVE**

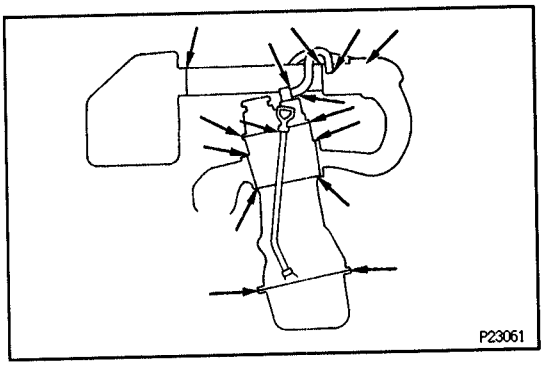

EG062-0J

PCV HOSES AND CONNECTIONS INSPECTION

VISUALLY INSPECT HOSES AND CONNECTIONS

Check for cracks, leaks or damage.

EVAPORATIVE EMISSION (EVAP) CONTROL SYSTEM

EG044-01

EVAP CONTROL SYSTEM INSPECTION

1. **VISUALLY INSPECT LINES AND CONNECTIONS**

Look for loosen connections, sharp bends or damage.

2. **VISUALLY INSPECT FUEL TANK**

Look for deformation, cracks or fuel leakage.

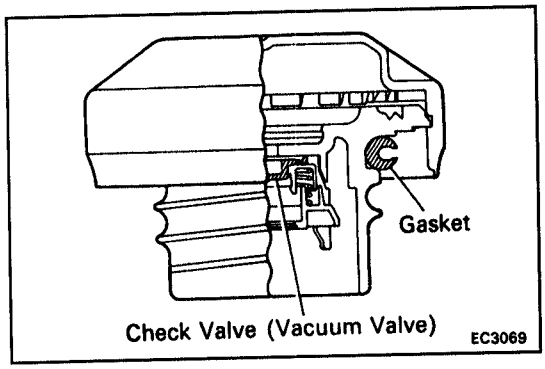

3. **VISUALLY INSPECT FUEL TANK CAP**

Check if the cap and/or gasket are deformed or damaged.

If necessary, repair or replace the cap.

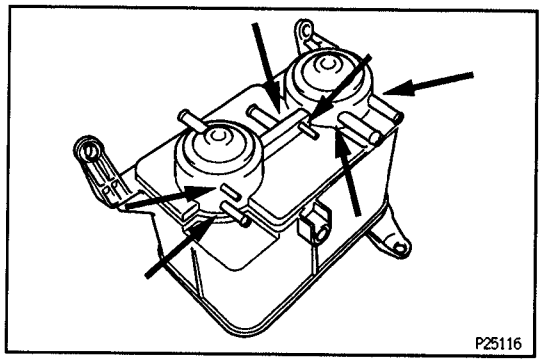

CHARCOAL CANISTER INSPECTION

EQ5N8–02

3RZ–FE:

1. **REMOVE CHARCOAL CANISTER**
2. **REMOVE VSV**
3. **VISUALLY INSPECT CHARCOAL CANISTER**
   Look for cracks or damage.

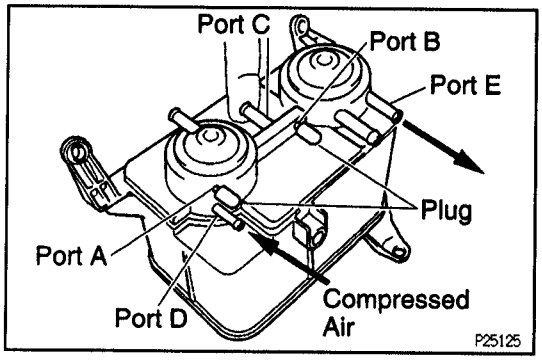

4. **CHECK FOR CLOGGED FILTER, AND STUCK CHECK VALVE AND DIAPHRAGM**

(a) Install the plugs to ports A and B.

(b) While holding port C closed, blow air (1.47 kPa, 15 gf/cm², 0.21 psi) into port D and check that air flows from port E.

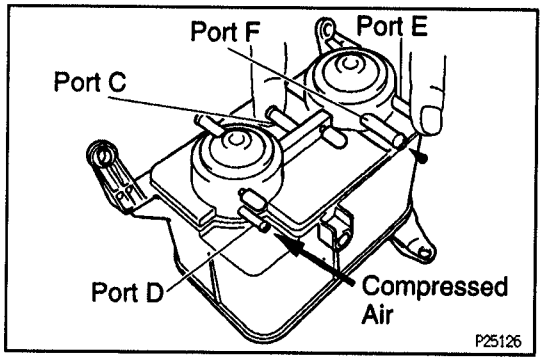

(c) While holding port C and port E closed, blow air (1.47 kPa, 15 gf/cm², 0.21 psi) into port D and check that air does not flow from port F.

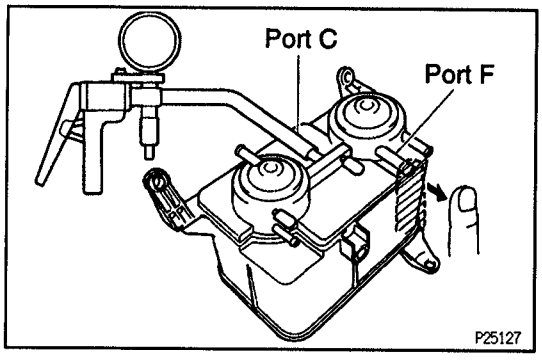

(d) Apply vacuum (2.94 kPa, 22 mmHg, 0.87 in.Hg) to port C, check that the vacuum does not decrease when port F is closed, and check that the vacuum decreases when port F is released.

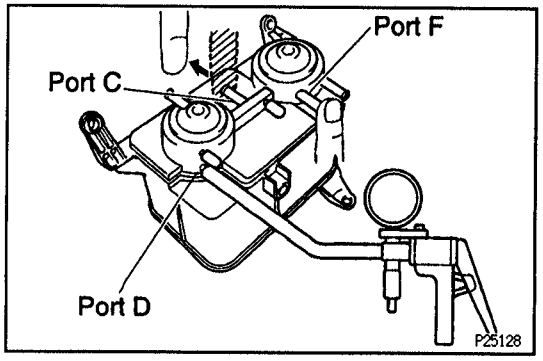

(e) While holding port F closed, apply vacuum (2.94 kPa, 22 mmHg, 0.87 in. Hg) to port D, check that the vacuum does not decrease when port C is closed, and check that the vacuum decreases when port C is released.

If a problem is found, replace the charcoal canister.

(f) Remove the plugs.

5. **REINSTALL CHARCOAL CANISTER**

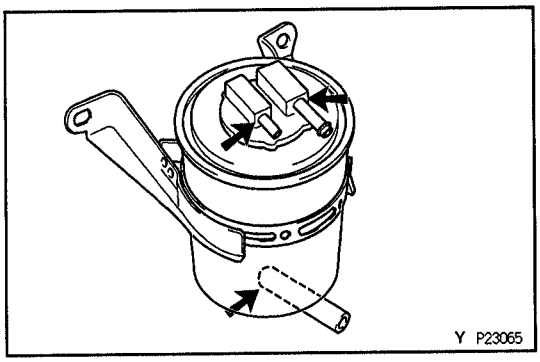
Y P23065

2RZ–FE:

1. **REMOVE CHARCOAL CANISTER**
2. **REMOVE VSV**
3. **VISUALLY INSPECT CHARCOAL CANISTER**
   Look for cracks or damage.

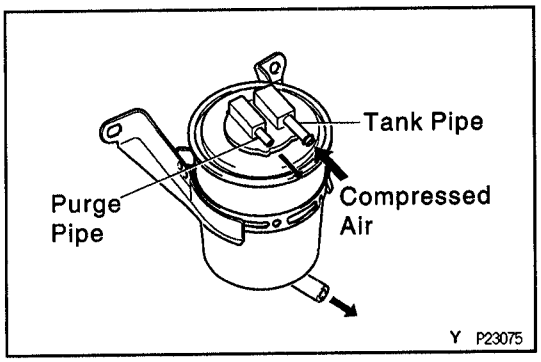

Y P23075

4. **INSPECT FOR CLOGGED FILTER AND STUCK CHECK VALVE**

(a) Using low pressure compressed air (4.71 kPa, 48 gf/cm², 0.68 psi), blow into tank pipe and check that air flows without resistance from the other pipes.

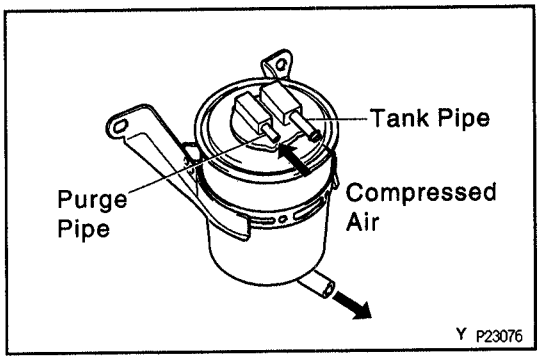

Y P23076

(b) Blow air (4.71 kPa, 48 gf/cm², 0.68 psi) into purge pipe and check that air does not flow from the tank pipe and air flows without resistance from the other pipe.
If a problem is found, replace the charcoal canister.

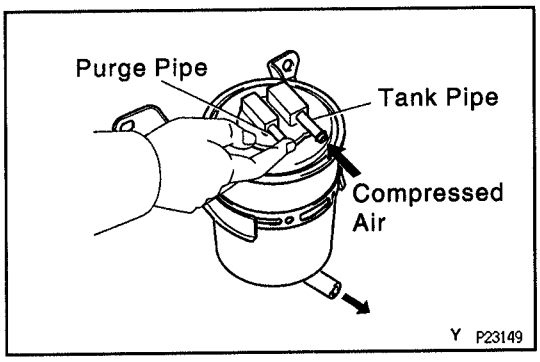

Y P23149

5. **CLEAN FILTER IN CANISTER**
   Clean the filter by blowing 294 kPa (3 kgf/cm², 43 psi) of compressed air into tank pipe while holding purge pipe closed.
   NOTICE:
   - **Do not attempt to wash the canister.**
   - **No activated carbon should come out.**
6. **REINSTALL VSV**
7. **REINSTALL CHARCOAL CANISTER**
   Torque: 31 N·m (316 kgf·cm, 23 ft·lbf)

EGSN0–02

VSV FOR EVAP INSPECTION

(See VSV for EVAP in MFI System)

EGSN0–03

VSV FOR VAPOR PRESSURE SENSOR INSPECTION (3RZ–FE)

(See VSV for vapor pressure sensor in MFI System)

VAPOR PRESSURE SENSOR INSPECTION (3RZ–FE) EGSN9–04

(See vapor pressure sensor in MFI System)

EXHAUST GAS RECIRCULATION (EGR) SYSTEM

EGR SYSTEM INSPECTION EGSCA–04

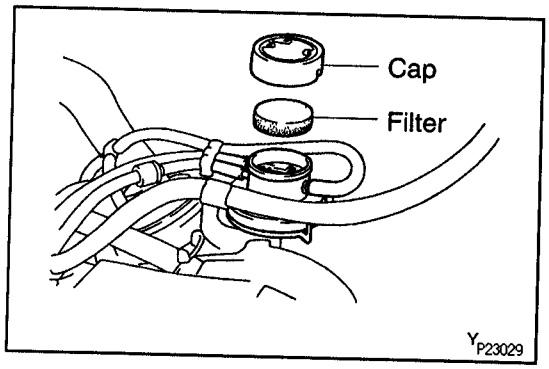

1. INSPECT AND CLEAN FILTER IN EGR VACUUM MODULATOR

(a) Remove the cap and filter.
(b) Check the filter for contamination or damage.
(c) Using compressed air, clean the filter.
(d) Reinstall the filter and cap.
HINT: Install the filter with the coarser surface facing the atmospheric side (outward).

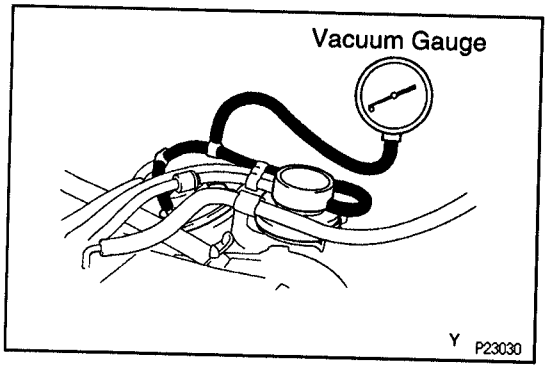

2. INSTALL VACUUM GAUGE

Using a 3–way connector, connect a vacuum gauge to the hose between the EGR valve and EGR vacuum modulator.

3. INSPECT SEATING OF EGR VALVE

Start the engine and check that the engine starts and runs at idle.

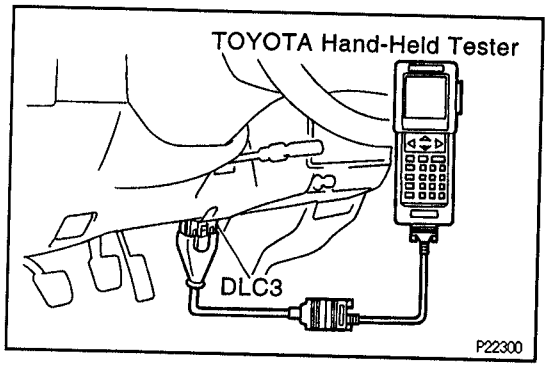

4. CONNECT TOYOTA HAND–HELD TESTER OR OBD II SCAN TOOL

(a) Connect the TOYOTA hand–held tester or OBD II scan tool to the DLC3.
(b) Please refer to the TOYOTA hand–held tester or OBD II scan tool operators manual for further details.

5. INSPECT VSV OPERATION WITH COLD ENGINE

(a) The engine coolant temperature should be below 50°C (122°F).
(b) Check that the vacuum gauge indicates zero at 3,000 rpm.
(c) Check that the EGR pipe is not hot.

6. INSPECT OPERATION OF VSV AND EGR VACUUM MODULATOR

(a) Select the active test mode on the TOYOTA hand–held tester (VSV is closed.).

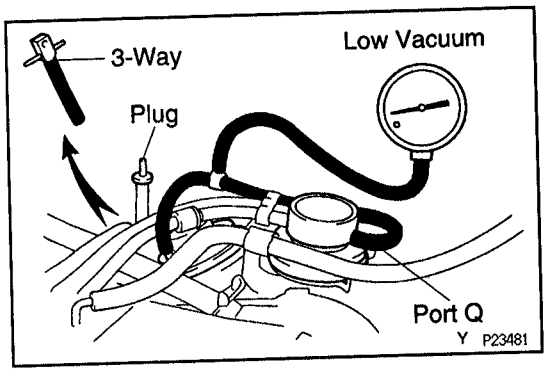

(b) If you have no TOYOTA hand–held tester, check these procedures:
  (1) Remove the 3–way connector with the vacuum hose.
  (2) Connect the vacuum hose (from port Q of EGR vacuum modulator) to the EGR valve.
  (3) Plug the vacuum hose (from VSV for EGR).
(c) Check that the vacuum gauge indicates low vacuum at 3,000 rpm.

7. DISCONNECT TOYOTA HAND–HELD TESTER OR OBD II SCAN TOOL

8. REMOVE VACUUM GAUGE

Remove the vacuum gauge, and reconnect the vacuum hoses to the proper locations.

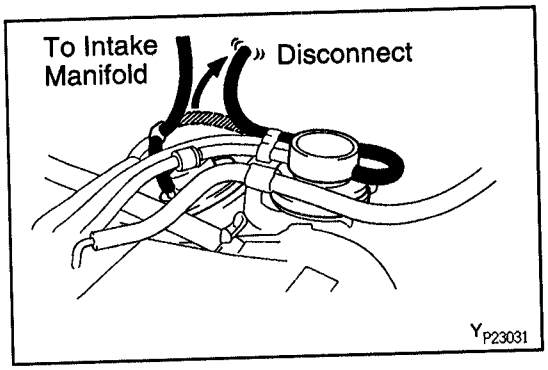

9. INSPECT EGR VALVE

(a) Apply vacuum directly to the EGR valve with the engine idling.
(b) Check that the engine runs rough or dies.
(c) Reconnect the vacuum hoses to the proper locations.

IF NO PROBLEM IS FOUND WITH THIS INSPECTION, SYSTEM IS NORMAL; OTHERWISE INSPECT EACH PART

EGSHA–02

EGR VALVE INSPECTION

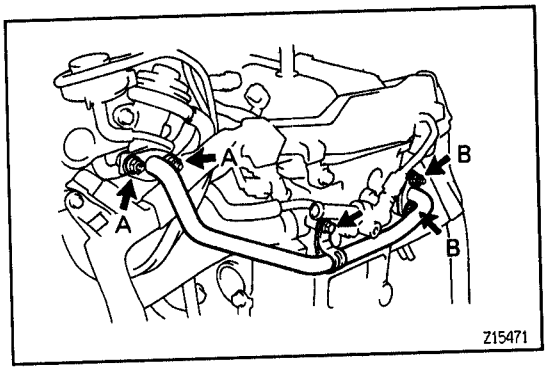

Installation is in the reverse order of removal.

1. REMOVE EGR PIPE

Remove the bolt, 4 nuts, EGR pipe and 2 gaskets.

INSTALLATION HINT: Install 2 new gaskets.

Torque:

Bolt: 18 N·m (185 kgf·cm, 13 ft·lbf)
Nut A: 19 N·m (195 kgf·cm, 14 ft·lbf)
Nut B: 20 N·m (200 kgf·cm, 15 ft·lbf)

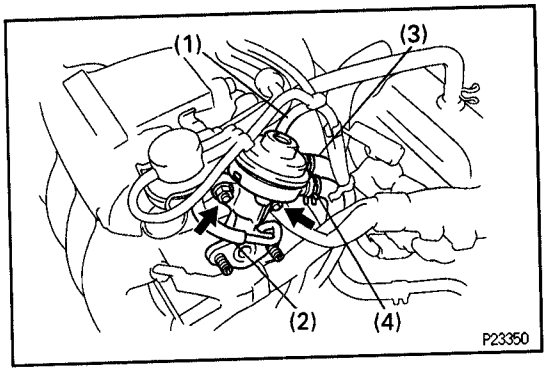

2. REMOVE EGR VALVE

(a) Disconnect these hoses:
  (1) Vacuum hose
  (2) EGR hose
  (3) Water bypass hose (from IAC valve)
  (4) Water bypass hose (from water bypass pipe)
(b) Remove the 2 nuts, EGR valve and gasket.

Torque: 19 N·m (195 kgf·cm, 14 ft·lbf)

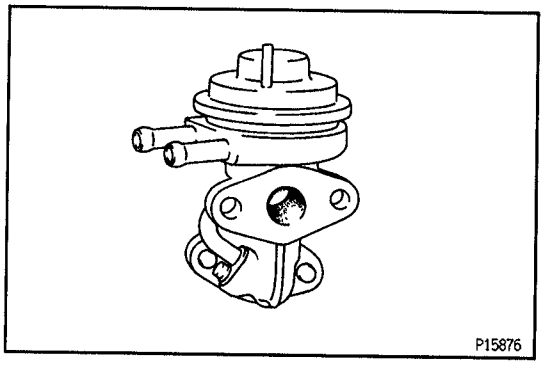

3. INSPECT EGR VALVE

Check for sticking and heavy carbon deposits.

If a problem is found, replace the EGR valve.

EGR VACUUM MODULATOR INSPECTION EG08B-01

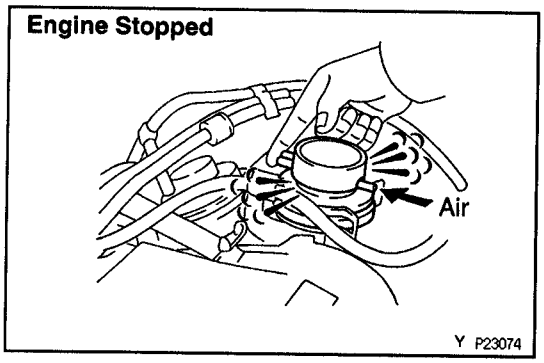

1. DISCONNECT VACUUM HOSES FROM EGR VACUUM MODULATOR

2. INSPECT EGR VACUUM MODULATOR OPERATION

(a) Block ports P and R with your finger.

(b) Blow air into port Q, and check that the air passes through to the air filter side freely.

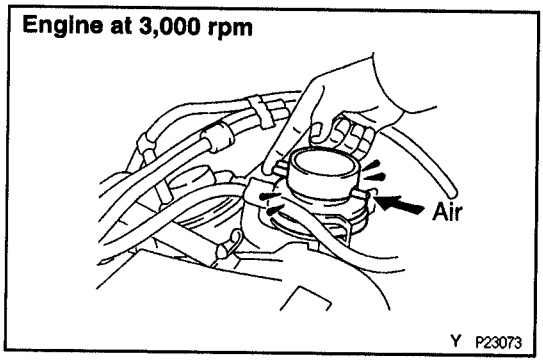

(d) Start the engine, and maintain speed at 3,000 rpm.

(e) Repeat the above test. Check that there is a strong resistance to air flow.

If operation is not as specified, replace the EGR vacuum modulator.

3. RECONNECT VACUUM HOSES TO EGR VACUUM MODULATOR

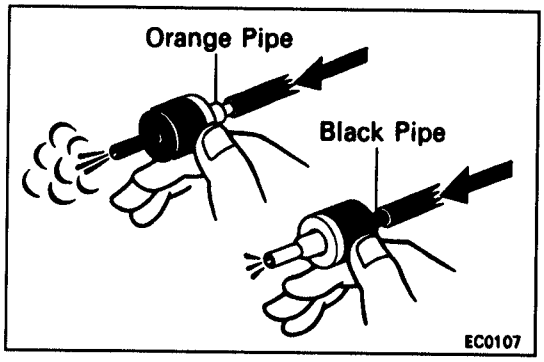

CHECK VALVE INSPECTION (A/T) EG8CD-03

1. REMOVE CHECK VALVE

2. INSPECT CHECK VALVE

(a) Check that air flows from the orange pipe to the black pipe.

(b) Check that air does not flow from the black pipe to the orange pipe.

If operation is not as specified, replace the check valve.

3. REINSTALL CHECK VALVE

HINT: Reinstall the check valve with the orange pipe facing the EGR vacuum modulator side.

VSV INSPECTION EG8NB-02

(See VSV for EGR in MFI System)

THREE–WAY CATALYTIC CONVERTER (TWC) SYSTEM

EG09E–0E

EXHAUST PIPE ASSEMBLY INSPECTION

1. CHECK CONNECTIONS FOR LOOSENESS OR DAMAGE
2. CHECK CLAMPS FOR WEAKNESS, CRACKS OR DAMAGE

THREE–WAY CATALYTIC CONVERTER INSPECTION

CHECK FOR DENTS OR DAMAGE

If any part of the protector is damaged or dented to the extent that it touches the converter, repair or replace it.

HEAT INSULATOR INSPECTION

1. CHECK HEAT INSULATOR FOR DAMAGE
2. CHECK FOR ADEQUATE CLEARANCE BETWEEN TWC AND HEAT INSULATOR

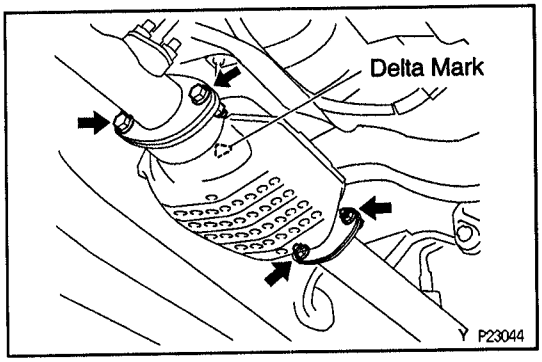

CATALYTIC CONVERTER REPLACEMENT

EG5HC–02

1. **REMOVE CONVERTER**

(a) Jack up the vehicle.
(b) Check that the converter is cool.
(c) Remove the bolts and nuts at the front and rear of the converter.
(d) Remove the converter and gasket.

2. **REINSTALL CONVERTER**

(a) Place new gaskets on the converter front and rear pipes, and connect the converter the exhaust pipes.
(b) Torque the bolts and nuts.
Torque: 48 N·m (490 kgf·cm, 35 ft·lbf)

SERVICE SPECIFICATIONS

EG09Q–1H

TORQUE SPECIFICATIONS

Part tightened	N·m	kgf·cm	ft·lbf
Charcoal canister x Body	31	316	23
EGR pipe x Cylinder head	18	185	13
EGR pipe x EGR valve	19	195	14
EGR pipe x Exhaust manifold	20	200	15
EGR valve x Air intake chamber	19	195	14
Front exhaust pipe x TWC	48	490	35
TWC x Tailpipe	48	490	35

MFI SYSTEM

PRECAUTION

EG5ND-02

1. **Before working on the fuel system, disconnect the negative (–) terminal cable from the battery.**
   HINT: Any diagnostic trouble code retained by the ECM will be erased when the battery negative (–) terminal cable is removed from the battery.
   Therefore, if necessary, read the diagnostic trouble code(s) before removing the negative (–) terminal cable from the battery.
2. **Do not smoke or work near an open flame when working on the fuel system.**
3. **Keep gasoline away from rubber or leather parts.**

EG64T-01

MAINTENANCE PRECAUTIONS

1. **PRECAUTION WHEN CONNECTING GAUGE**
   Use battery as the power source for the timing light, etc.
2. **IN EVENT OF ENGINE MISFIRE, THESE PRECAUTIONS SHOULD BE TAKEN**

(a) Check proper connection of battery terminals, etc.
(b) Handle high–tension cords carefully.
(c) After repair work, check that the ignition coil terminals and all other ignition system lines are reconnected securely.
(d) When cleaning the engine compartment, be especially careful to protect the electrical system from water.

3. **PRECAUTIONS WHEN HANDLING HEATED OXYGEN SENSORS**

(a) Do not allow oxygen sensor to drop or hit against an object.
(b) Do not allow the sensor to come into contact with water.

EG35R-05

IF VEHICLE IS EQUIPPED WITH MOBILE RADIO SYSTEM (HAM, CB, ETC.)

If the vehicle is equipped with a mobile communication system, refer to the precaution in the IN section.

EG6NF-02

AIR INDUCTION SYSTEM

1. Separation of the engine oil dipstick, oil filler cap, PCV hose, etc. may cause the engine to run out of tune.
2. Disconnection, looseness or cracks in the parts of the air induction system between the throttle body and cylinder head will cause air suction and cause the engine to run out of tune.

EG5HG–02

ELECTRONIC CONTROL SYSTEM

1. Before removing MFI wiring connectors, terminals, etc., first disconnect the power by either turning the ignition switch to LOCK or disconnecting the negative (–) terminal cable from the battery.
   HINT: Always check the diagnostic trouble code before disconnecting the battery terminal cable.
2. When installing the battery, be especially careful not to incorrectly connect the positive (+) and negative (–) cable terminals.
3. Do not permit parts to receive a severe impact during removal or installation. Handle all MFI parts carefully, especially the ECM.
4. Do not be careless during troubleshooting as there are numerous transistor circuits and even slight terminal contact can further troubles.
5. Do not open the ECM cover.
6. When inspecting during rainy weather, take care to prevent entry of water. Also, when washing the engine compartment, prevent water from getting on the MFI parts and wiring connectors.
7. Parts should be replaced as an assembly.
8. Care is required when pulling out and inserting wiring connectors.
   (a) Release the lock and pull out the connector, pulling on the connectors.
   (b) Fully insert the connector and check that it is locked.
9. When inspecting a connector with a volt/ohmmeter.
   (a) Carefully take out the water–proofing rubber if it is a water–proof type connector.
   (b) Insert the test probe into the connector from wiring side when checking the continuity, amperage or voltage.
   (c) Do not apply unnecessary force to the terminal.
   (d) After checking, install the water–proofing rubber on the connector securely.

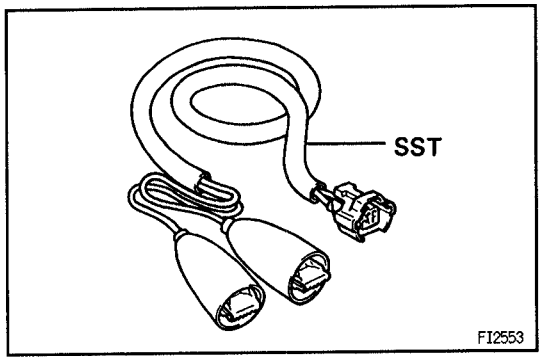

10. Use SST for inspection or test of the injector or its wiring connector.
    SST 09842–30070

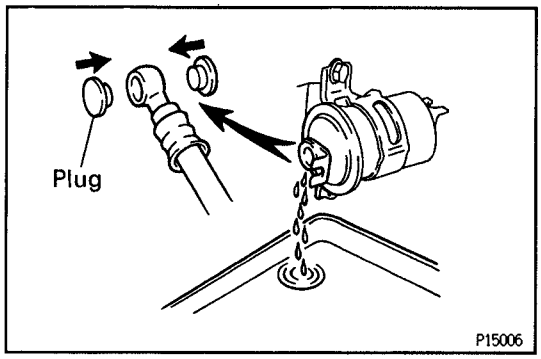

FUEL SYSTEM

EGSAV–04

1. When disconnecting the high pressure fuel line, a large amount of gasoline will spill out, so observe these procedures:
(a) Put a container under the connection.
(b) Slowly loosen the connection.
(c) Disconnect the connection.
(d) Plug the connection with a rubber plug.

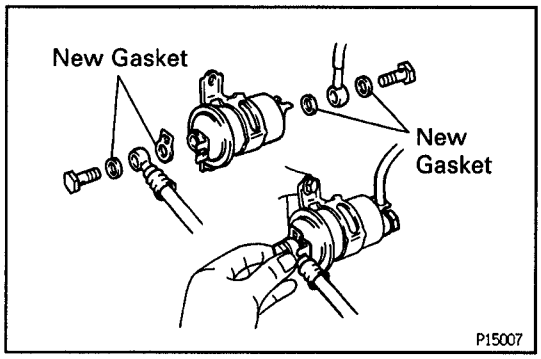

2. When connecting the flare nut or union bolt on the high pressure pipe union, observe these procedures:

Union Bolt Type:
(a) Always use a new gasket.
(b) Tighten the union bolt by hand.
(c) Tighten the union bolt to the specified torque.
Torque: 29 N·m (300 kgf·cm, 22 ft·lbf)

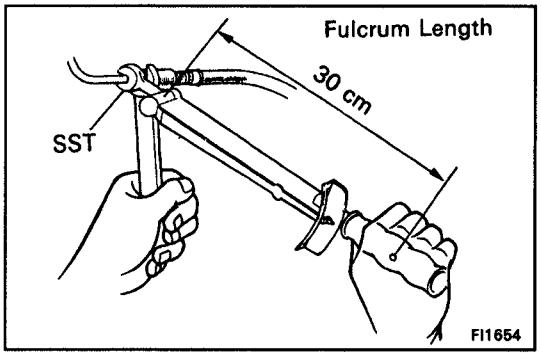

Flare Nut Type:
(a) Apply a light coat of engine oil to the flare and tighten the flare nut by hand.
(b) Using SST, tighten the flare nut to the specified torque.
SST 09631–22020
Torque: 30 N·m (310 kgf·cm, 22 ft·lbf)
HINT: Use a torque wrench with a fulcrum length of 30 cm (11.81 in.).

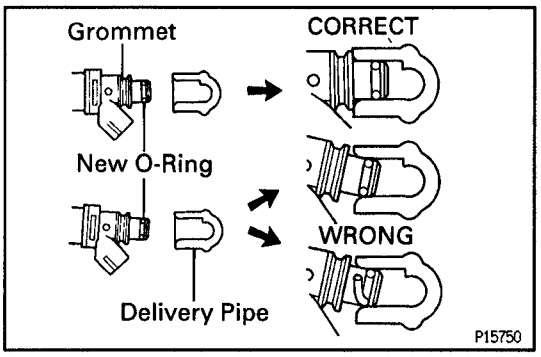

3. Observe these precautions when removing and installing the injectors.
(a) Never reuse the O–ring.
(b) When placing a new O–ring on the injector, take care not to damage it in any way.
(c) Coat a new O–ring with spindle oil or gasoline before installing–never use engine, gear or brake oil.

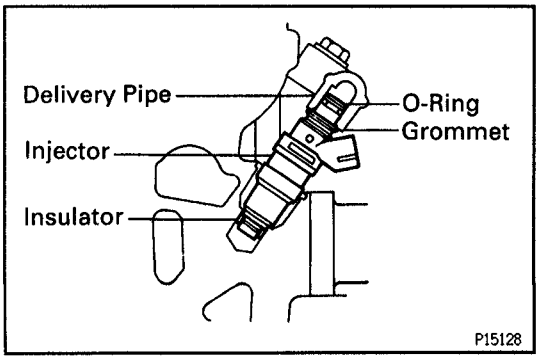

4. Install the injector to the delivery pipe and cylinder head as shown in the illustration.

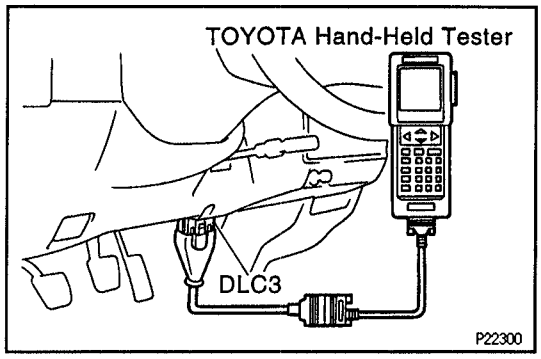

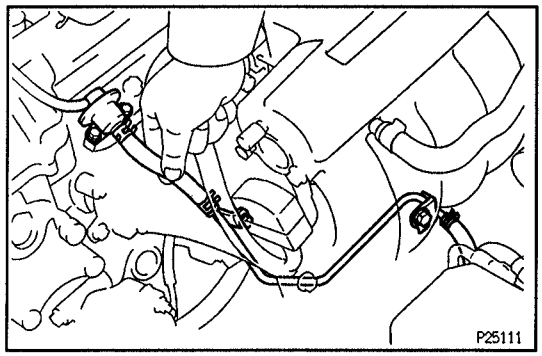

5. Check that there are no fuel leaks after doing maintenance anywhere on the fuel system.
(a) Connect the TOYOTA hand–held tester to the DLC3.
(b) Turn ignition switch ON and TOYOTA hand–held tester main switch ON.
(c) Select the active test mode on the TOYOTA hand–held tester.
(d) Please refer to the TOYOTA hand – held tester operator's manual for further details.
(e) If you have no TOYOTA hand–held tester, connect the positive (+) and negative (–) leads from the battery to the fuel pump connector.
(See step 2 in fuel pump inspection)
(f) Pinch the fuel return hose. The pressure in high pressure line will rise to approx. 400 kPa (4 kgf/cm², 57 psi). In this state, check to see that there are no leaks from any part of the fuel system.
NOTICE: Always pinch the hose. Avoid bending as it may cause to hose to crack.
(g) Turn the ignition switch to LOCK.
(h) Remove TOYOTA hand–held tester.

PREPARATION

SST (SPECIAL SERVICE TOOLS)

E00CF–1D

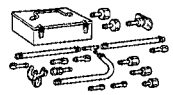	09268–41046 Injection Measuring Tool Set	
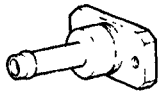	(09268–41091) NO.7 Union	
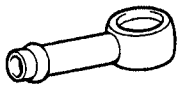	(90405–09015) No.1 Union	
	09268–45012 EFI Fuel Pressure Gauge	
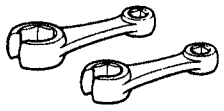	09631–22020 Power Steering Hose Nut 14 x 17 mm Wrench Set	Fuel line flare nut
	09816–30010 Oil Pressure Switch Socket	Knock sensor

	09842–30070 Wiring "F" EFI Inspection	
	09843–18020 Diagnosis Check Wire	

RECOMMENDED TOOLS

EG0CG–0Z

	09082–00050 TOYOTA Electrical Tester Set.	
	09200–00010 Engine Adjust Kit .	
	09258–00030 Hose Plug Set .	Plug for vacuum hose, fuel hose etc.

EQUIPMEMT

EG0CH–1B

Carburetor cleaner	Throttle body
Graduated cylinder	Injector
Heater	
Soft brush	Throttle body
Sound scope	Injector
OBD II scan tool	Engine speed
Thermometer	
Torque wrench	

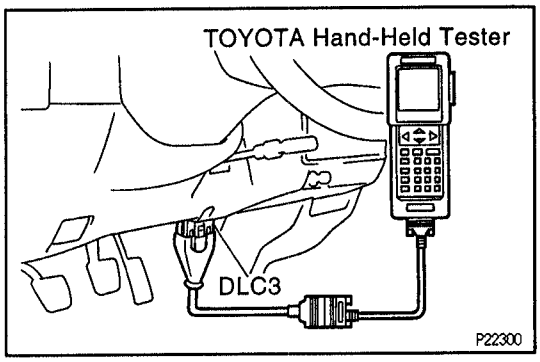

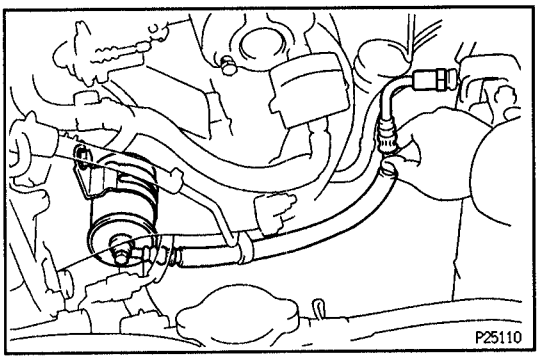

FUEL PUMP

EG64U−01

ON−VEHICLE INSPECTION

1. INSPECT FUEL PUMP OPERATION

(a) Connect the TOYOTA hand−held tester to the DLC3.

(b) Turn the ignition switch ON and TOYOTA hand−held tester main switch ON.

NOTICE: Do not start the engine.

(c) Select the active test mode on the TOYOTA hand−held tester.

(d) Please refer to the TOYOTA hand − held tester operator's manual for further details.

(e) If you have no TOYOTA hand−held tester, connect the positive (+) and negative (−) leads from the battery to the fuel pump connector.
(See step 2 in fuel pump inspection)

(f) Check that there is pressure in the inlet hose from the fuel filter.
HINT: At this time, you will hear fuel return noise.
If there is no pressure, check these parts:
- M−Fuse (AM2 30A)
- Fuses (EFI 15A, IGN 7.5A)
- EFI main relay
- Fuel pump
- ECM
- Wiring connections

(g) Turn the ignition switch to LOCK.

(h) Remove the TOYOTA hand−held tester.

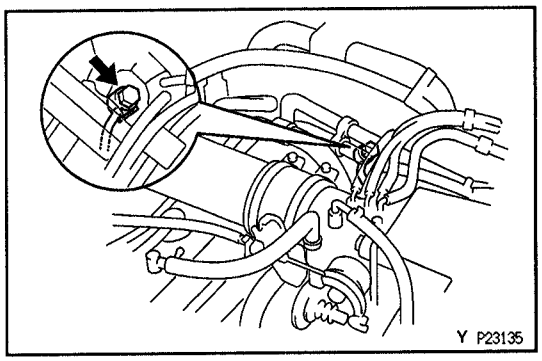

2. INSPECT FUEL PRESSURE

(a) Check that the battery positive voltage is above 12 volts.

(b) Disconnect the negative (−) terminal cable from the battery.

(c) Remove the union bolt and 2 gaskets, and disconnect the fuel inlet pipe from the delivery pipe.
HINT:
- Put a suitable container or shop rag under the delivery pipe.
- Slowly loosen the union bolt.

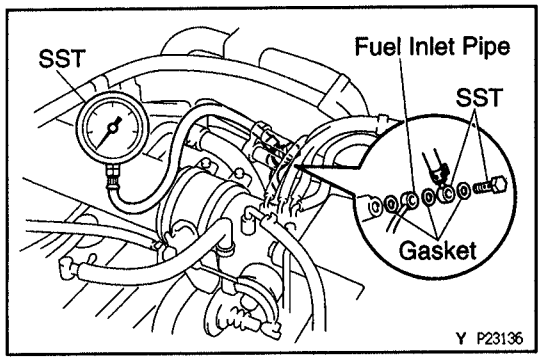

(d) Install the fuel inlet pipe and SST (pressure gauge) to the delivery pipe with the 3 gaskets and SST (union bolt).
SST 09268−45012
Torque: 29 N·m (300 kgf·cm, 22 ft·lbf)

(e) Wipe off any splattered gasoline.

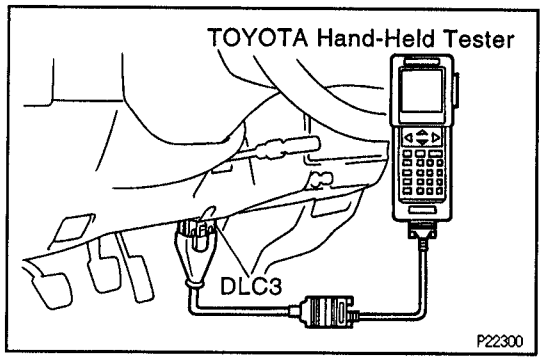

(f) Connect the TOYOTA hand–held tester to the DLC3.
(g) Turn the ignition switch ON and TOYOTA hand–held tester main switch ON.
NOTICE: Do not start the engine.
(h) Select the active test mode on the TOYOTA hand–held tester.
(i) Please refer to the TOYOTA hand – held tester operator's manual for further details.
(j) If you have no TOYOTA hand–held tester, connect the positive (+) and negative (–) leads from the battery to the fuel pump connector.
(See step 2 in fuel pump inspection)
(k) Reconnect the negative (–) terminal cable to the battery.
(l) Turn the ignition switch ON.
(m) Measure the fuel pressure.
Fuel pressure:
265–304 kPa (2.7–3.1 kgf/cm², 38–44 psi)
If pressure is high, replace the fuel pressure regulator.
If pressure is low, check these parts:
- Fuel hoses and connections
- Fuel pump
- Fuel filter
- Fuel pressure regulator
- Injectors

(n) Remove the TOYOTA hand–held tester.
(o) Start the engine.
(p) Measure the fuel pressure at idle.
Fuel pressure:
206–255 kPa (2.1–2.6 kgf/cm², 31–37 psi)
If pressure is not as specified, check the vacuum sensing hose and fuel pressure regulator.
(q) Stop the engine.
(r) Check that the fuel pressure remains as specified for 5 minutes after the engine has stopped.
Fuel pressure:
147 kPa (1.5 kgf/cm², 21 psi) or more
If pressure is not as specified, check the fuel pump, pressure regulator and/or injector.
(s) After checking fuel pressure, disconnect the negative (–) terminal cable from the battery and carefully remove the SST to prevent gasoline from splashing.
SST 09268–45012
(t) Reconnect the fuel inlet pipe to the delivery pipe with 2 new gaskets and the union bolt.
Torque: 29 N·m (300 kgf·cm, 22 ft·lbf)
(u) Reconnect the negative (–) terminal cable to the battery.
(v) Check for fuel leakage.

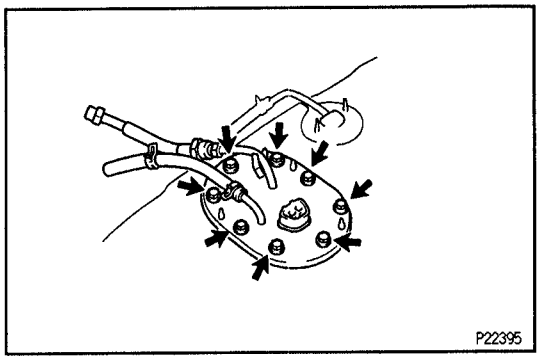

EG

FUEL PUMP REMOVAL

EG8AZ–04

CAUTION: Do not smoke or work near an open flame when working on the fuel pump.

1. **REMOVE FUEL TANK**
   (See fuel tank and line in MFI System)
2. **REMOVE FUEL PUMP BRACKET ASSEMBLY FROM FUEL TANK**

(a) Remove the 8 bolts.
Torque: 3.5 N·m (35 kgf·cm, 31 in.·lbf)

(b) Pull out the pump bracket assembly.

(c) Remove the gasket from the pump bracket.
INSTALLATION HINT: Use a new gasket to the pump bracket.

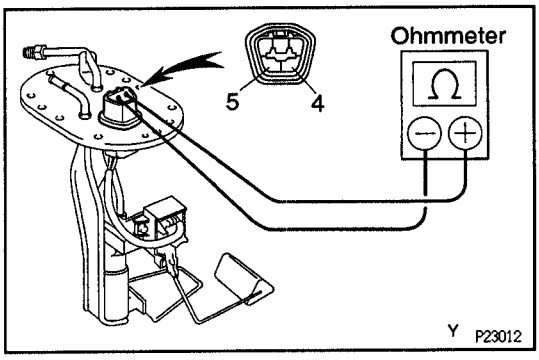

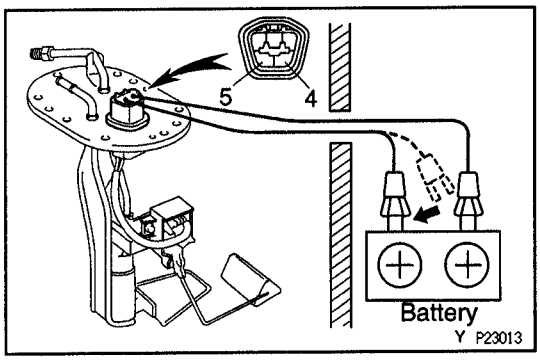

FUEL PUMP INSPECTION

EG8NJ–02

1. **INSPECT FUEL PUMP RESISTANCE**
   Using an ohmmeter, measure the resistance between the terminals 4 and 5.
   Resistance:
   At 20°C (68°F): 0.2 – 3.0 Ω
   If the resistance is not as specified, replace the fuel pump and/or lead wire.

2. **INSPECT FUEL PUMP OPERATION**
   Connect the positive (+) lead from the battery to terminal 4 of the connector, and the negative (–) lead to terminal 5. Check that the fuel pump operates.
   NOTICE:
   - **These tests must be done quickly (within 10 seconds) to prevent the coil from burning out.**
   - **Keep the fuel pump as far away from the battery as possible.**
   - **Always do the switching at the battery side.**

   If operation is not as specified, replace the fuel pump and/or lead wire.

COMPONENTS FOR DISASSEMBLY AND ASSEMBLY

EGOD1–14

Reference (2WD)

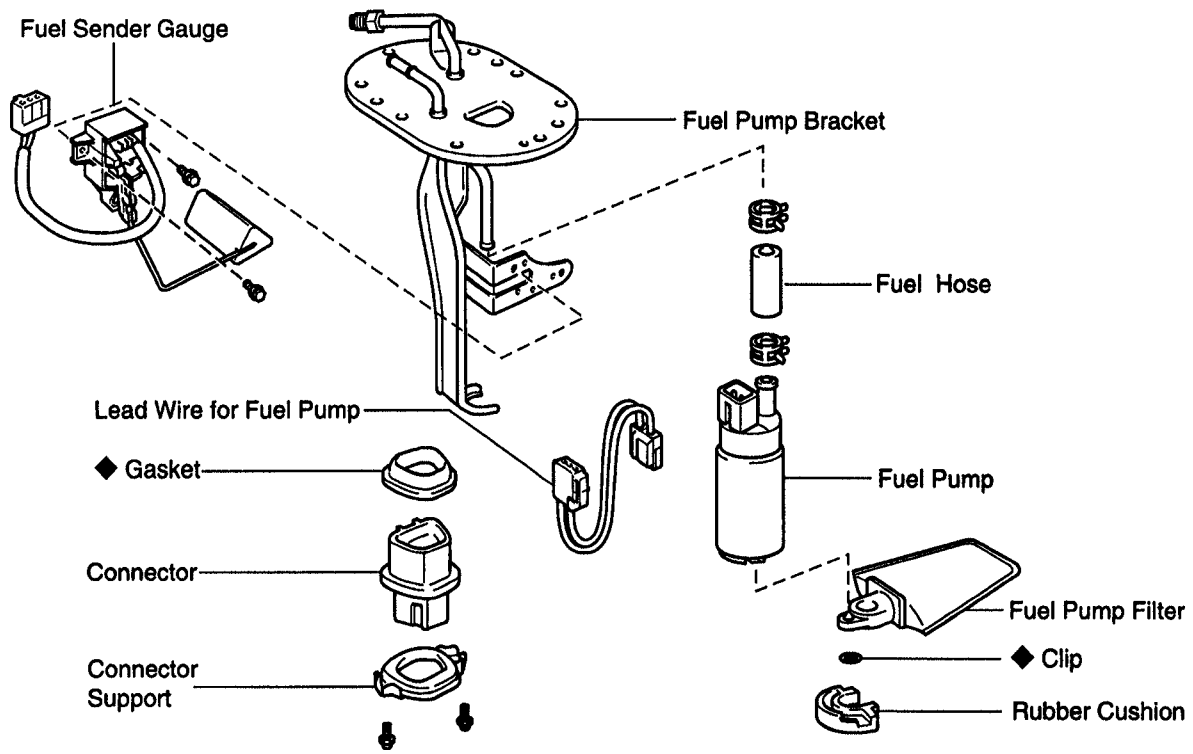

◆ Non-reusable part

Y P23022

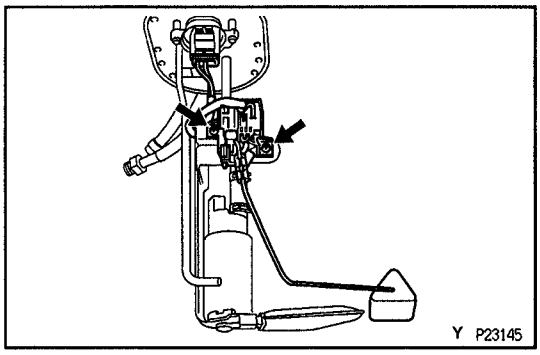

FUEL PUMP DISASSEMBLY

EGOGH–08

1. REMOVE FUEL PUMP LEAD WIRE
2. REMOVE FUEL SENDER GAUGE FROM FUEL PUMP BRACKET

(a) Disconnect the fuel sender gauge connector.
(b) Remove the 2 screws and sender gauge.

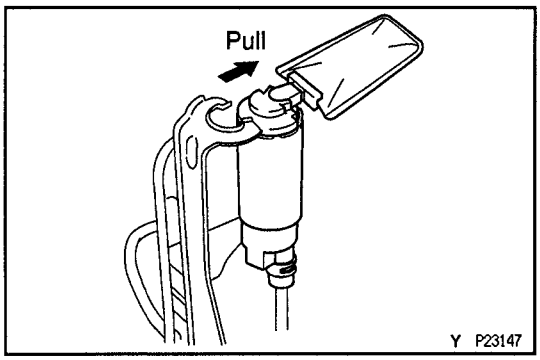

3. REMOVE FUEL PUMP FROM FUEL PUMP BRACKET

(a) Pull off the lower side of the fuel pump from the pump bracket.
(b) Disconnect the fuel hose from the fuel pump, and remove the fuel pump.
(c) Remove the rubber cushion from the fuel pump.

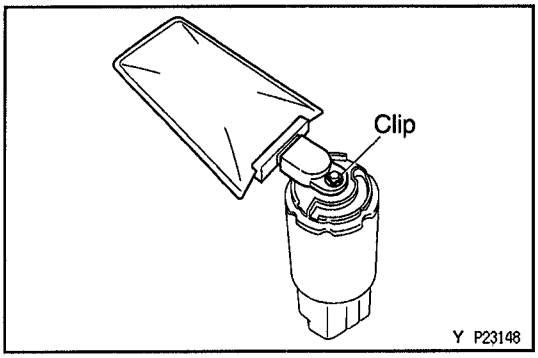

4. REMOVE FUEL PUMP FILTER FROM FUEL PUMP

(a) Using a small screwdriver, remove the clip.

(b) Pull out the pump filter.

INSTALLATION HINT: Install the pump filter with a new clip.

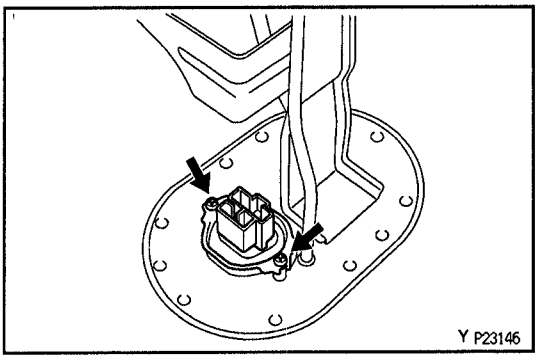

5. REMOVE CONNECTOR

Remove the 2 screws, connector support, connector and gasket.

INSTALLATION HINT: Install the connector with a new gasket.

FUEL PUMP ASSEMBLY

EG64V-01

Assembly is in the reverse order of disassembly.

FUEL PUMP INSTALLATION

EG64W-01

Installation is in the reverse order of removal.

FUEL PRESSURE REGULATOR

EG1AC–12

COMPONENTS FOR REMOVAL AND INSTALLATION

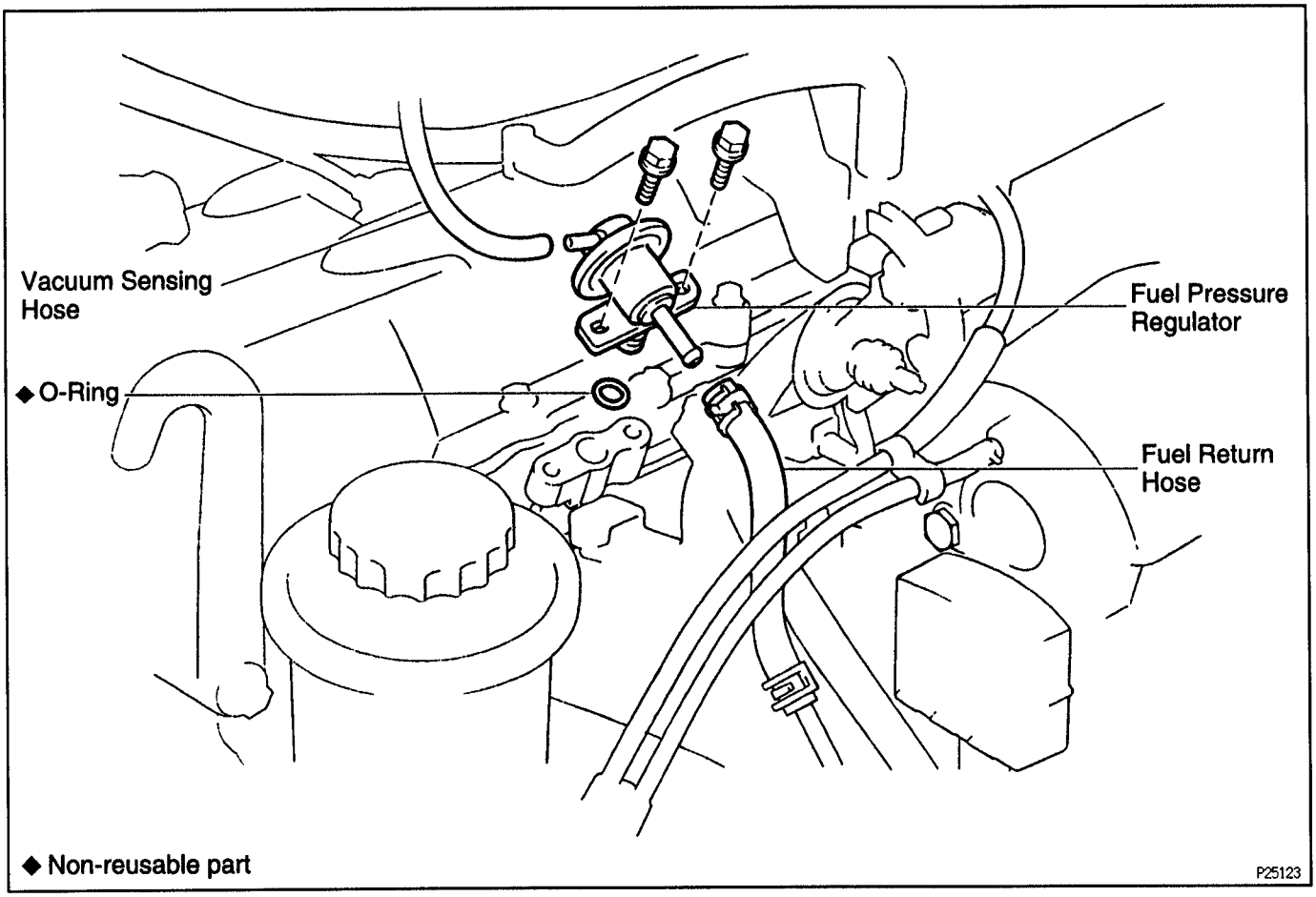

EG

FUEL PRESSURE REGULATOR REMOVAL

EGBMK–02

1. **DISCONNECT VACUUM SENSING HOSE FROM FUEL PRESSURE REGULATOR**
2. **DISCONNECT FUEL RETURN HOSE FROM FUEL PRESSURE REGULATOR**
   HINT: Put a suitable container or shop towel under the pressure regulator.

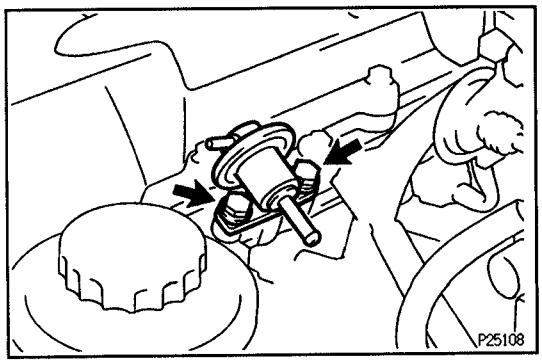

3. **REMOVE FUEL PRESSURE REGULATOR**

(a) Remove the 2 bolts and fuel pressure regulator.
Torque: 8.8 N·m (90 kgf·cm, 78 in.·lbf)

(b) Remove the O–ring.
INSTALLATION HINT: Use a new O–ring.

FUEL PRESSURE REGULATOR INSTALLATION

EG0S0-01

Installation is in the reverse order of removal.

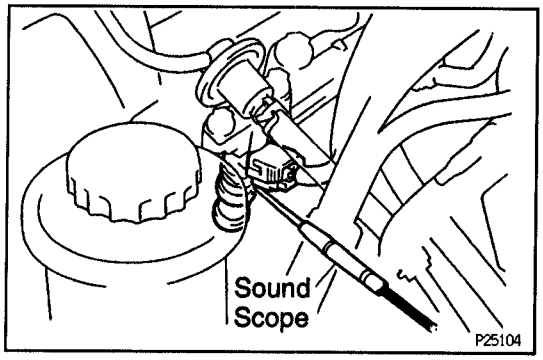

INJECTOR

ON–VEHICLE INSPECTION

EG5NL-02

1. INSPECT INJECTOR OPERATION

Check operation sound from each injector.

(a) With the engine running or cranking, use a sound scope to check that there is normal operating noise in proportion to engine speed.

(b) If you have no sound scope, you can check the injector transmission operation with your finger.

If no sound or unusual sound is heard, check the wiring connector, injector or injection signal from the ECM.

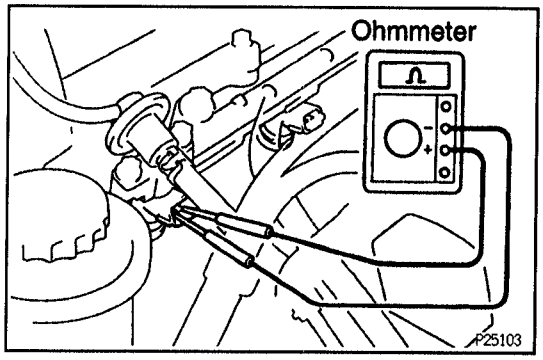

2. INSPECT INJECTOR RESISTANCE

(a) Remove the throttle body.
(See throttle body removal)

(b) Disconnect the injector connectors.

(c) Using an ohmmeter, measure the resistance between the terminals.

Resistance:

At 20°C (68°F): 12 – 16 Ω

If the resistance is not as specified, replace the injector.

(d) Reconnect the injector connectors.

(e) Reinstall the throttle body.
(See throttle body installation)

EG130–0U

COMPONENTS FOR REMOVAL AND INSTALLATION

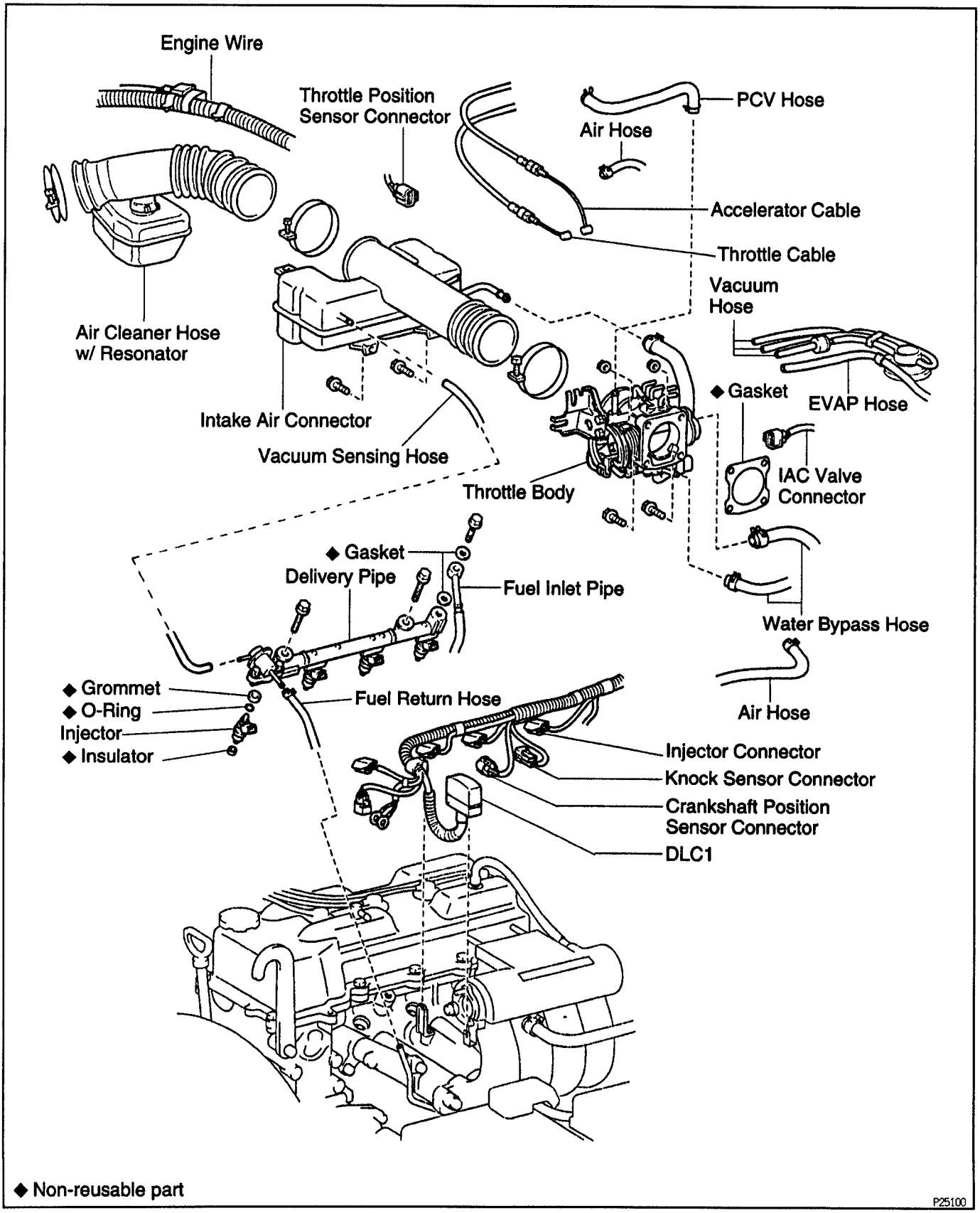

◆ Non-reusable part

P25100

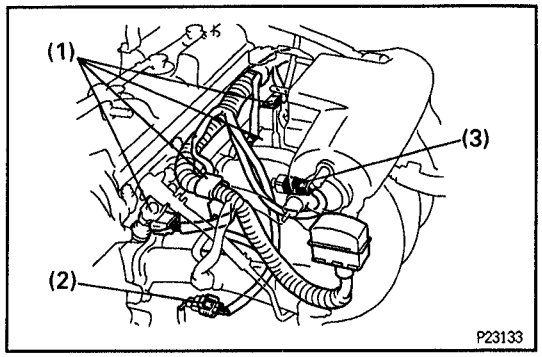

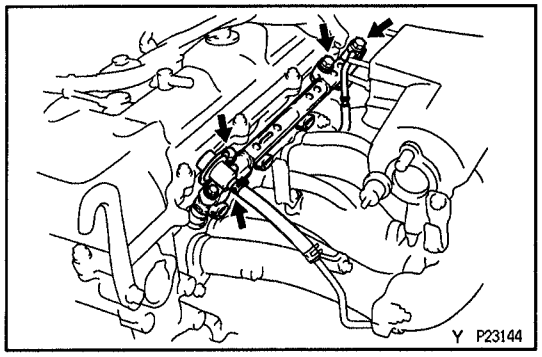

EG

INJECTORS REMOVAL

EG651-01

1. **REMOVE THROTTLE BODY**
   (See throttle body removal)
2. **DISCONNECT ENGINE WIRE**

(a) Disconnect these connectors:
   (1) 4 injector connectors
   (2) Crankshaft position sensor connector
   (3) Knock sensor connector

(b) Disconnect the DLC1 and wire clamp from the brackets.

3. **REMOVE DELIVERY PIPE AND INJECTORS**

(a) Disconnect the vacuum sensing hose from the fuel pressure regulator.

(b) Disconnect the fuel return hose from the fuel pressure regulator.

(c) Remove the union bolt and 2 gaskets, and disconnect the fuel inlet pipe from the delivery pipe.
HINT:
- Put a suitable container or shop rag under the delivery pipe.
- Slowly loosen the union bolt.

(d) Remove the 2 bolts and delivery pipe together with the 4 injectors.
NOTICE: Be careful not to drop the injectors when removing the delivery pipe.

(e) Remove the 4 insulators from the 4 spacers.

(f) Pull out the 4 injectors from the delivery pipe.

(g) Remove the O–ring and grommet from each injector.

INJECTORS INSPECTION

EG652-04

1. **INSPECT INJECTOR INJECTION**
CAUTION: Keep injector clean of sparks during the test.

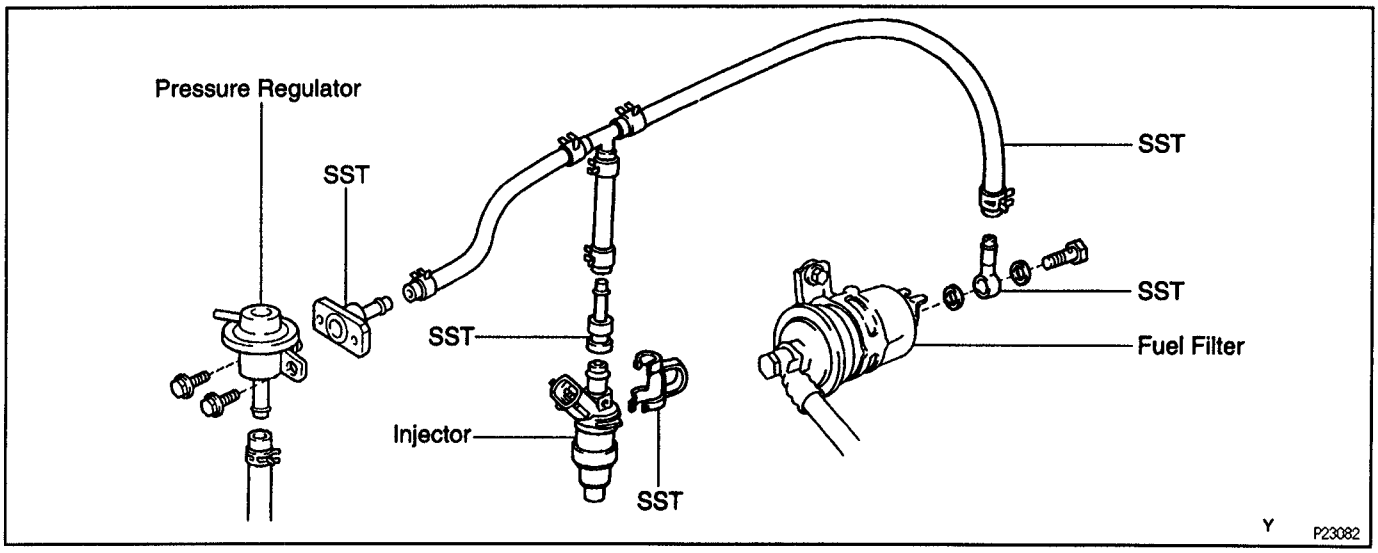

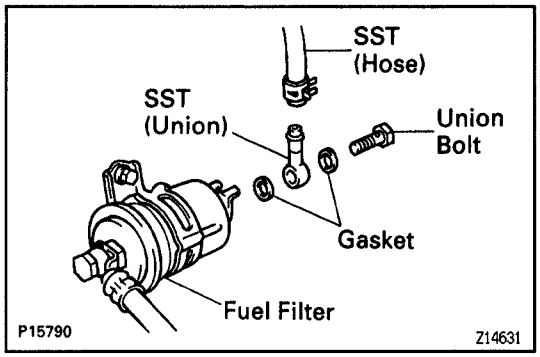

(a) Remove the fuel inlet pipe from the fuel filter outlet.
(b) Connect SST (union and hose) to the fuel filter outlet with the 2 gaskets and union bolt.
SST 09268−41046 (90405−09015)
Torque: 29 N·m (300 kgf·cm, 22 ft·lbf)

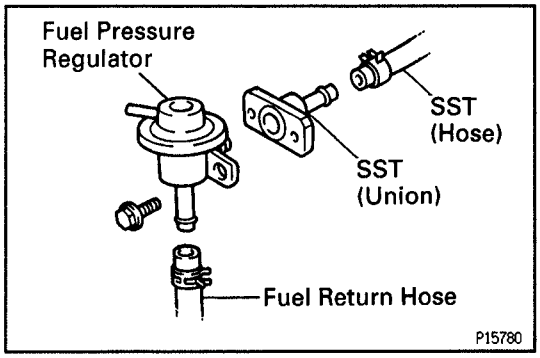

(c) Remove the fuel pressure regulator from the delivery pipe.
(d) Install the O−ring to the fuel inlet of pressure regulator.
(e) Connect SST (hose) to the fuel inlet of the pressure regulator with SST (union) and the 2 bolts.
SST 09268−41046 (09268−41091)
(f) Connect the fuel return hose to the fuel outlet of the pressure regulator.

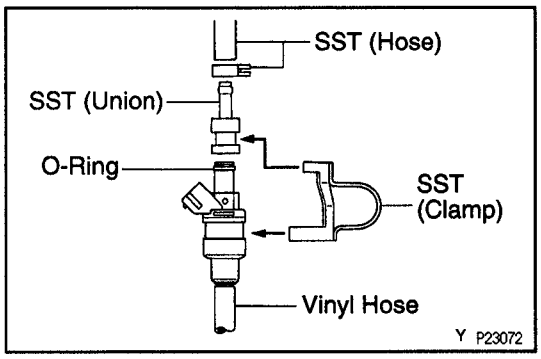

(g) Install the O−ring to the injector.
(h) Connect SST (union and hose) to the injector, and hold the injector and union with SST (clamp).
SST 09268−41046
(i) Put the injector into a graduated cylinder.
HINT: Install a suitable vinyl hose onto the injector to prevent gasoline from splashing out.

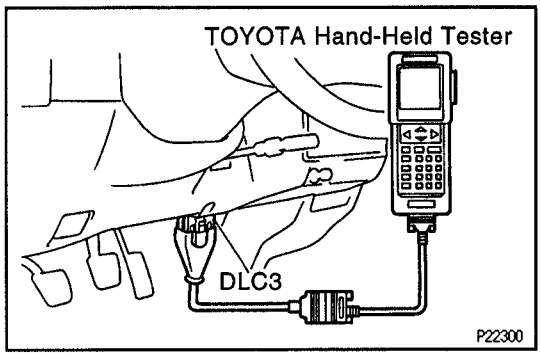

(j) Connect the TOYOTA hand−held tester to the DLC3.
(k) Turn the ignition switch ON and TOYOTA hand−held tester main switch ON.
NOTICE: Do not start the engine.
(l) Select the active test mode on the TOYOTA hand−held tester.
(m) Please refer to the TOYOTA hand − held tester operator's manual for further details.
(n) If you have no TOYOTA hand−held tester, connect the positive (+) and negative (−) leads from the battery to the fuel pump connector.
(See step 2 in fuel pump inspection)

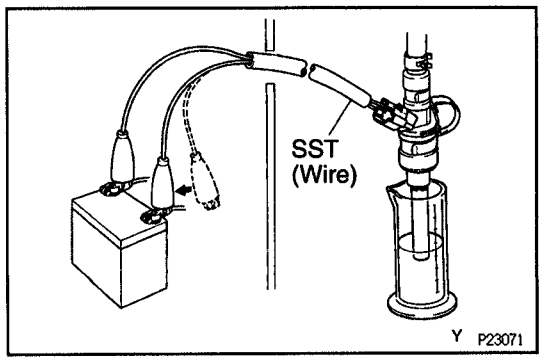

(o) Connect SST (wire) to the injector and battery for 15 seconds, and measure the injection volume with a graduated cylinder. Test each injector 2 or 3 times.
SST 09842−30070

Volume:

2RZ–FE

62 – 79 cm³ (3.8 – 4.8 cu in.) per 15 seconds

3RZ–FE

69 – 88 cm³ (4.2 – 5.4 cu in.) per 15 seconds

Difference between each injector:

5 cm³ (0.3 cu in.) or less

If the injection volume is not as specified, replace the injector.

EG

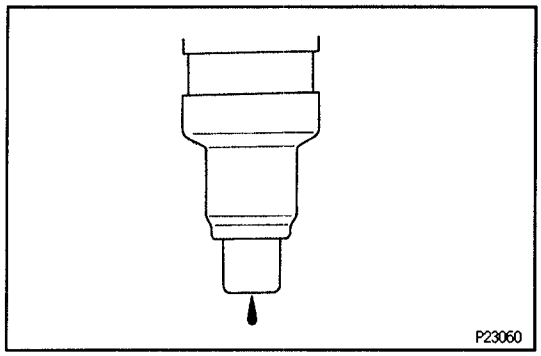

2. INSPECT LEAKAGE

(a) In the condition above, disconnect the test probes of SST (wire) from the battery and check the fuel leakage from the injector.
SST 09842–30070

Fuel drop:

1 drop or less per 3 minutes

(b) Turn the ignition switch to LOCK.

(c) Disconnect the negative (–) terminal cable from the battery.

(d) Remove the SST and TOYOTA hand–held tester.
SST 09268–41045

(e) Reinstall the fuel pressure regulator and fuel inlet pipe.

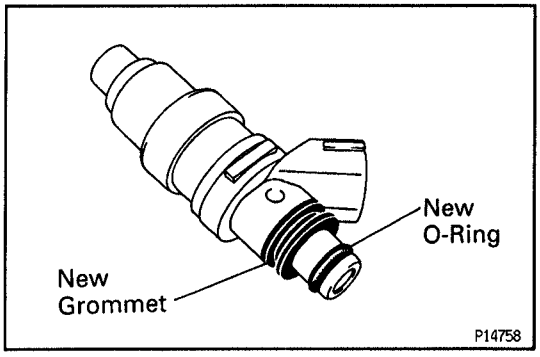

INJECTORS INSTALLATION

EG583-04

1. INSTALL INJECTORS TO DELIVERY PIPE

(a) Install a new grommet to the injector.

(b) Apply a light coat of gasoline to a new O–ring and install it to the injector.

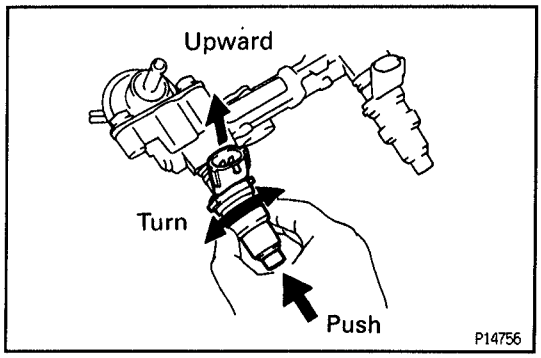

(c) While turning the injector left and right, install it to the delivery pipe. Install the 4 injectors.

(d) Position the injector connector upward.

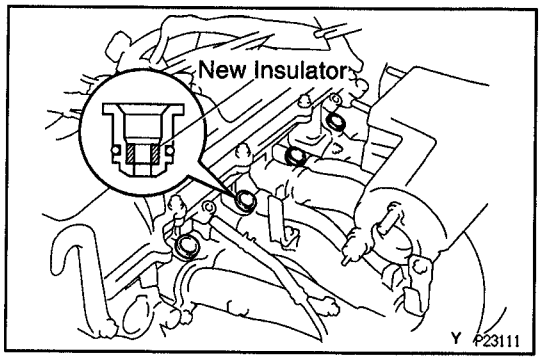

2. INSTALL INJECTORS AND DELIVERY PIPE

(a) Place the 4 new insulators and in position on the spacers.

(b) Place the 4 injectors together with the delivery pipe in position on the cylinder head.

(c) Temporarily install the 2 bolts holding the delivery pipe to the cylinder head.

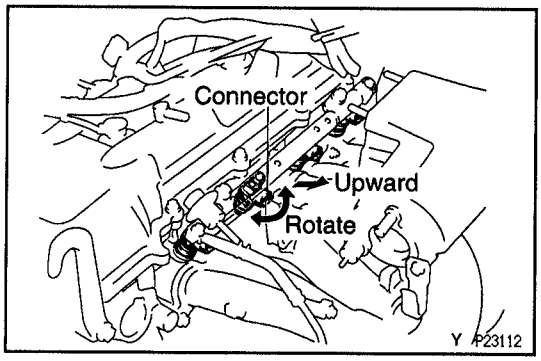

(d) Check that the injectors rotate smoothly.
HINT: If injectors do not rotate smoothly, the probable cause is incorrect installation of O–rings. Replace the O–rings.

(e) Position the injector connector upward.

(f) Tighten the 2 bolts holding the delivery pipe to the cylinder head.
Torque: 21 N·m (210 kgf·cm, 15 ft·lbf)

(g) Connect the fuel inlet pipe to the delivery pipe with 2 new gaskets and the union bolt.
Torque: 29 N·m (300 kgf·cm, 22 ft·lbf)

(h) Connect the fuel return hose to the fuel pressure regulator.

(i) Connect the vacuum sensing hose to the fuel pressure regulator.

3. CONNECT ENGINE WIRE

4. INSTALL THROTTLE BODY
(See throttle body installation)

FUEL TANK AND LINE
COMPONENTS

EG0DC–0U

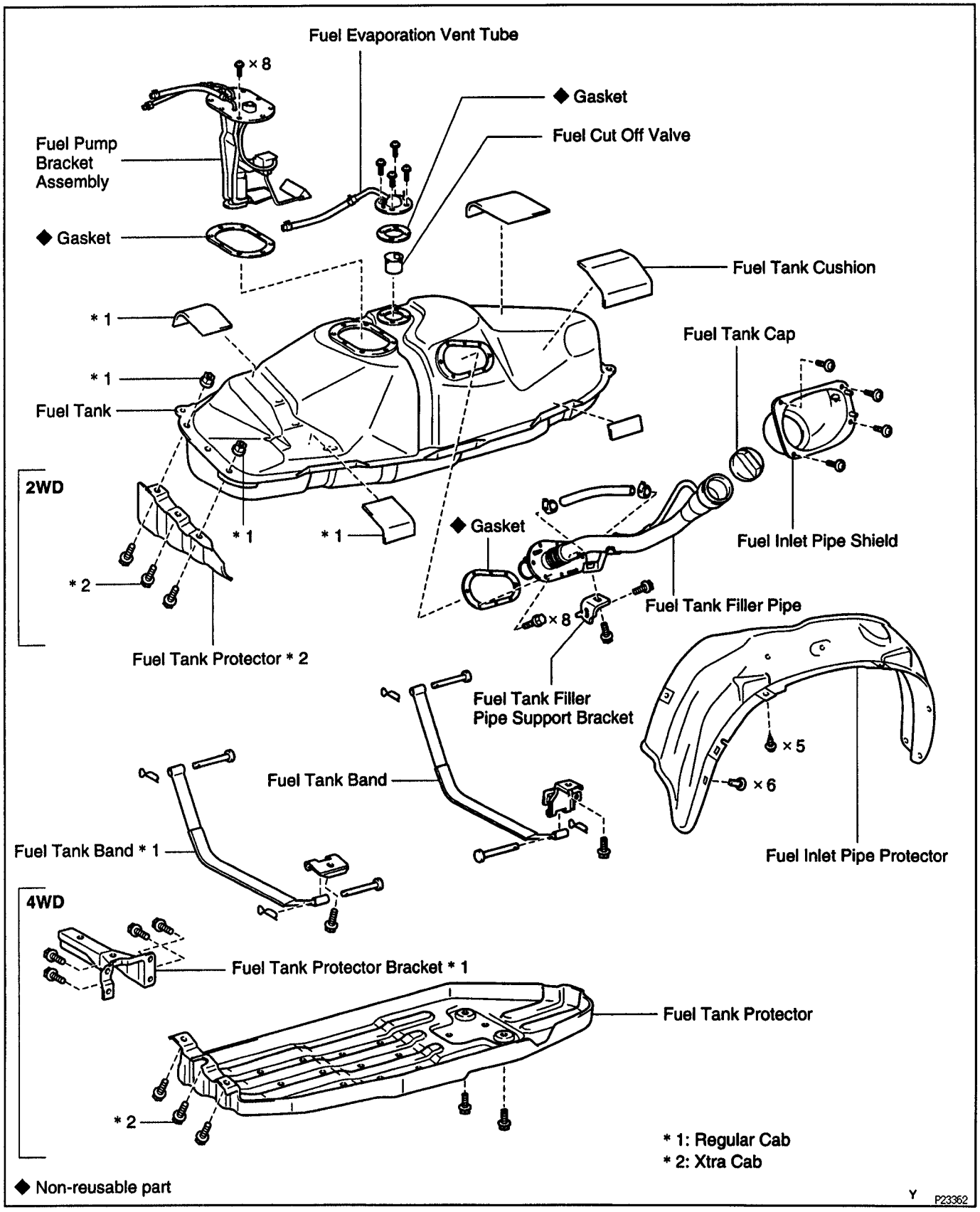

PRECAUTIONS

EG0DD–0A

1. **Always use new gaskets when replacing the fuel tank or component parts.**
2. **Apply the proper torque to all parts tightened.**

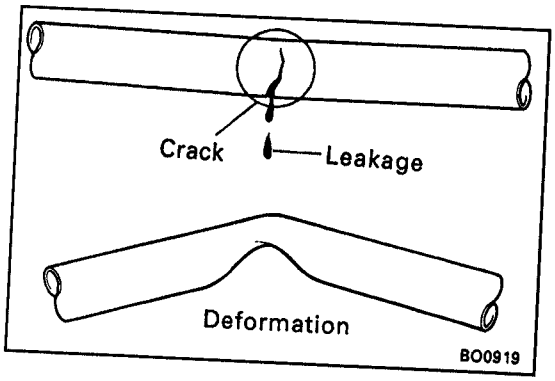

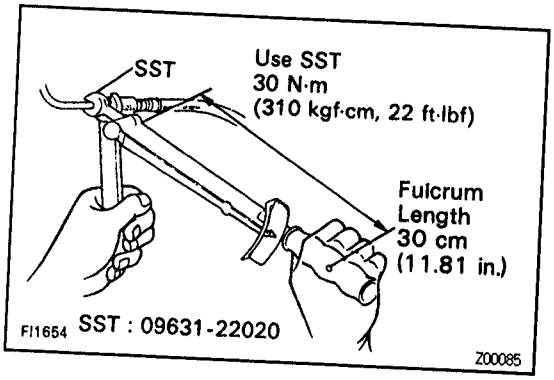

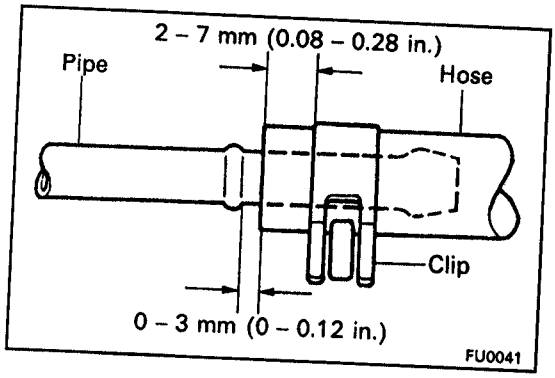

FUEL LINES AND CONNECTIONS INSPECTION

EG0DE–0D

EG

(a) Check the fuel lines for cracks or leakage, and all connections for deformation.
(b) Check the fuel tank vapor vent system hoses and connections for looseness, sharp bends or damage.
(c) Check the fuel tank for deformation, cracks, fuel leakage or tank band looseness.
(d) Check the filler neck for damage or fuel leakage.
(e) Hose and tube connections are as shown in the illustration.

If a problem is found, repair or replace the part as necessary.

THROTTLE BODY

EG584–03

ON–VEHICLE INSPECTION

1. INSPECT THROTTLE BODY

(a) Check that the throttle linkage moves smoothly.

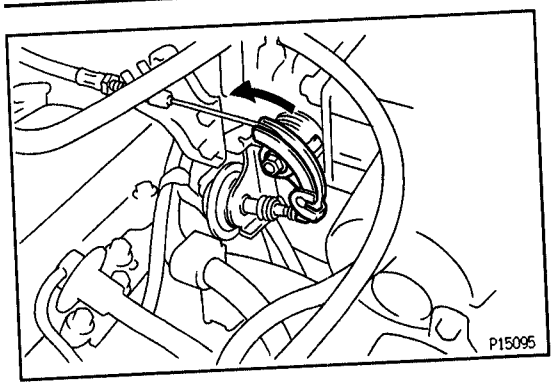

(b) Check the vacuum at each port.

- Start the engine.
- Check the vacuum with your finger.

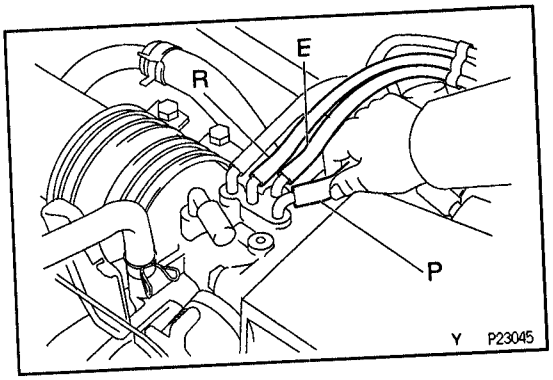

Port name	At idle	At 3,500 rpm
P	Vacuum	Vacuum
E	No vacuum	Vacuum
R	No vacuum	Vacuum

2. INSPECT THROTTLE POSITION SENSOR

(a) Disconnect the sensor connector.

(b) Apply vacuum to the throttle opener.

(c) Using an ohmmeter, measure the resistance between each terminal.

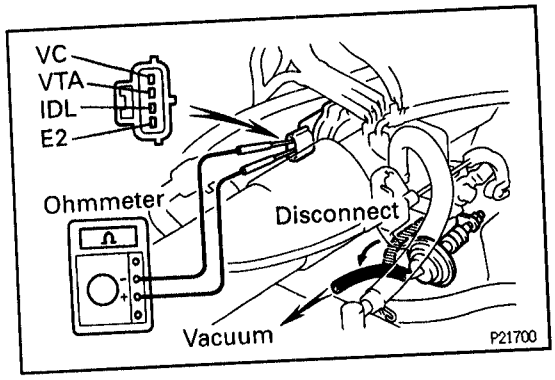

Throttle valve condition	Between terminals	Resistance
Fully closed	VTA – E2	0.2 – 5.7 kΩ
Fully closed	IDL – E2	2.3 kΩ or less
Open	IDL – E2	Infinity
Fully open	VTA – E2	2.0 – 10.2 kΩ
–	VC – E2	2.5 – 5.9 kΩ

(d) Reconnect the sensor connector.

3. INSPECT THROTTLE OPENER

A. Warm up engine

Allow the engine to warm up to normal operating temperature.

B. Check idle speed

(See steps 2 and 3 in idle speed inspection in Engine Mechanical)

Idle speed:

650 – 750 rpm

C. Check throttle opener setting speed

(a) Disconnect the vacuum hose from the throttle opener, and plug the hose end.

(b) Check the throttle opener setting speed.

Throttle opener setting speed:

1,200 – 1,500 rpm

If the throttle opener setting is not as specified, replace the throttle body.

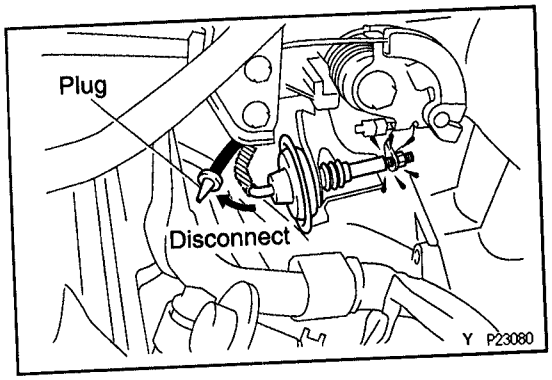

(c) Stop the engine.
(d) Reconnect the vacuum hose to the throttle opener.
(e) Start the engine, and check that the idle speed returns to the correct speed.

D. Disconnect TOYOTA hand–held tester or OBD II scan tool

COMPONENTS FOR REMOVAL AND INSTALLATION

EG13G–1D

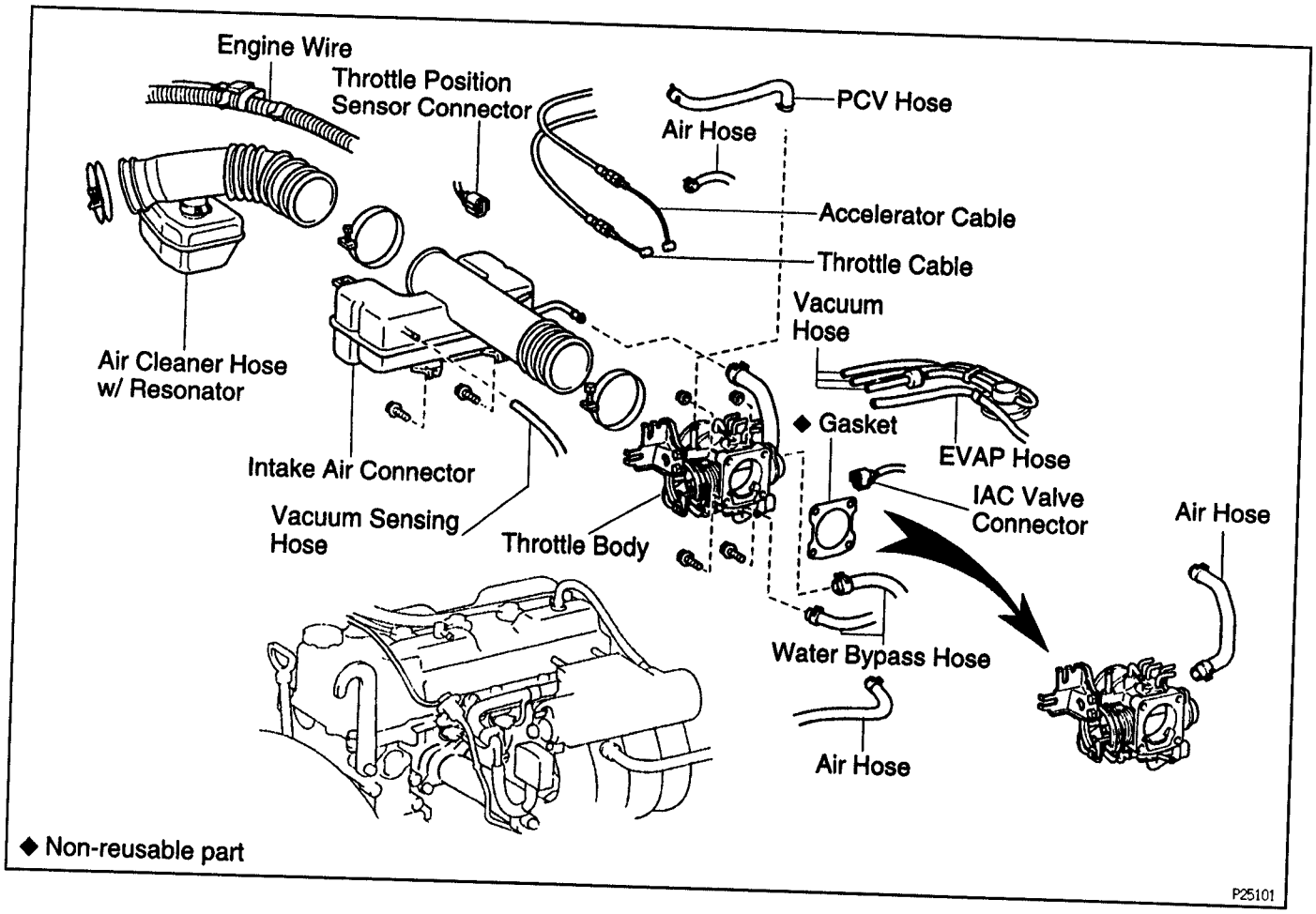

THROTTLE BODY REMOVAL

EG585–04

1. **DRAIN ENGINE COOLANT**
2. **M/T:**
   DISCONNECT ACCELERATOR CABLE FROM THROTTLE BODY
   A/T:
   DISCONNECT ACCELERATOR AND THROTTLE CABLES FROM THROTTLE BODY

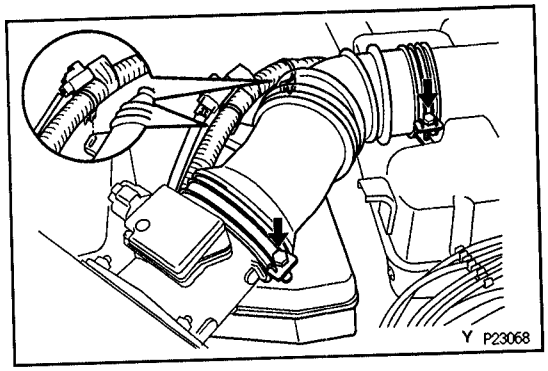

3. REMOVE AIR CLEANER HOSE WITH RESONATOR

(a) Disconnect the 2 wire clamps from the air cleaner hose.

(b) Loosen the air cleaner hose clamps, remove the air cleaner together with the resonator.

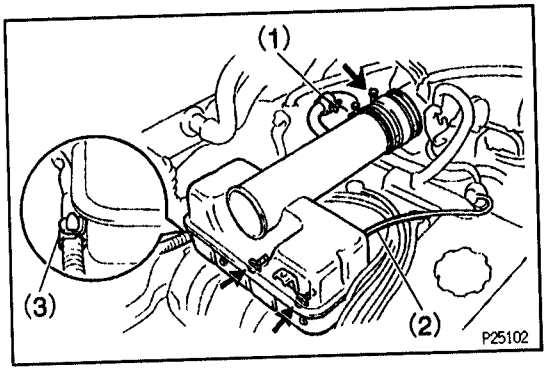

4. REMOVE INTAKE AIR CONNECTOR

(a) Disconnect these air hoses and wire clamp:
- (1) Air hose for IAC
- (2) Vacuum sensing hose
- (3) Wire clamp for engine wire

(b) Remove the 2 bolts, hose clamp and intake air connector.

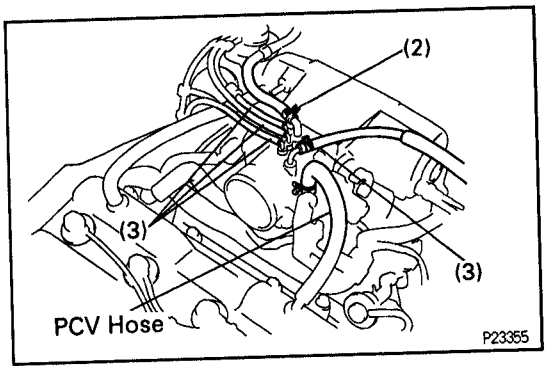

5. REMOVE PCV HOSE

6. REMOVE THROTTLE BODY

(a) Disconnect these hoses:
- (1) 3 vacuum hoses
- (2) EVAP hose
- (3) w/ PS:
  Air hose for PS idle–up

(b) Disconnect the throttle position sensor connector.

(c) Disconnect the IAC valve connector.

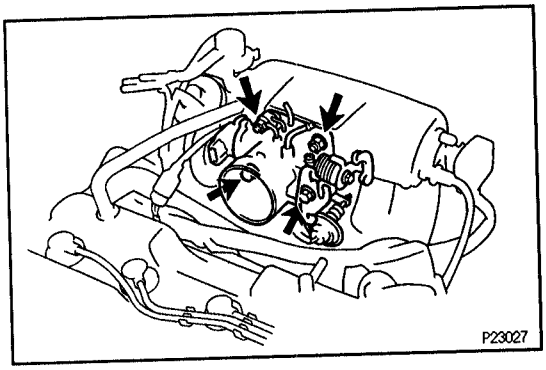

(d) Remove the 2 bolts, 2 nuts, and disconnect the throttle body from the air intake chamber.
Torque: 20 N·m (200 kgf·cm, 14 ft·lbf)

(e) Remove the throttle body gasket.
INSTALLATION HINT: Use a new gasket.

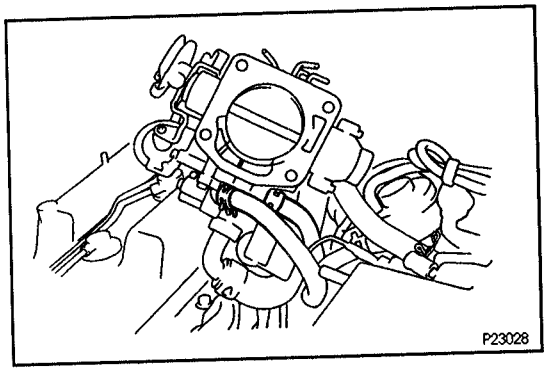

(f) Disconnect the water bypass hoses from the throttle body, and remove the throttle body.

7. REMOVE AIR HOSE FROM IAC VALVE

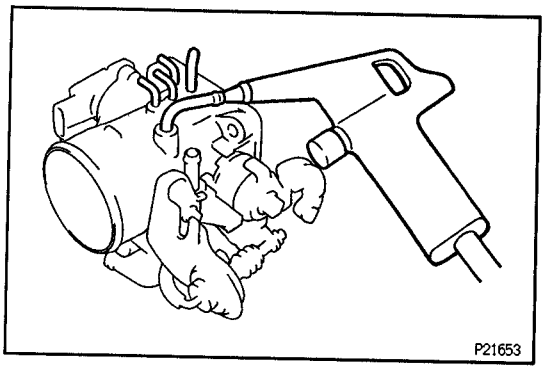

THROTTLE BODY INSPECTION

EG0DH–0U

1. CLEAN THROTTLE BODY

(a) Using a soft brush and carburetor cleaner, clean the cast parts.

(b) Using compressed air, clean all the passages and apertures.

NOTICE: To prevent deterioration, do not clean the throttle position sensor and IAC valve.

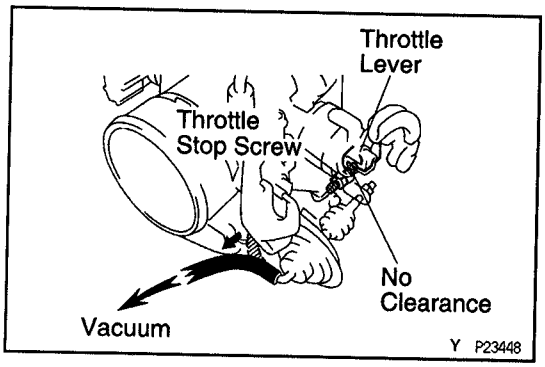

2. INSPECT THROTTLE VALVE

(a) Apply vacuum to the throttle opener.

(b) Check that there is no clearance between the throttle stop screw and throttle lever when the closed throttle position.

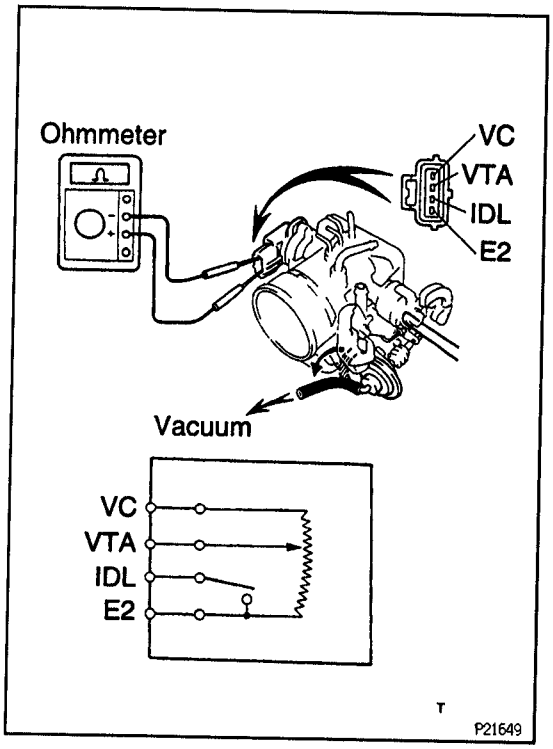

3. INSPECT THROTTLE POSITION SENSOR

(a) Apply vacuum to the throttle opener.

(b) Insert a thickness gauge between the throttle stop screw and stop lever.

(c) Using an ohmmeter, measure the resistance between each terminal.

Clearance between lever and stop screw	Between terminals	Resistance
0 mm (0 in.)	VTA – E2	0.2 – 5.7 kΩ
0.57 mm (0.022 in.)	IDL – E2	2.3 kΩ or less
0.74 mm (0.029 in.)	IDL – E2	Infinity
Throttle valve fully open	VTA – E2	2.0 – 10.2 kΩ
–	VC – E2	2.5 – 5.9 kΩ

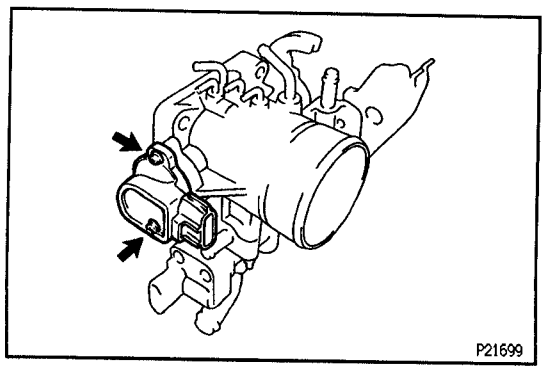

4. IF NECESSARY, ADJUST THROTTLE POSITION SENSOR

(a) Loosen the 2 set screws of the sensor.

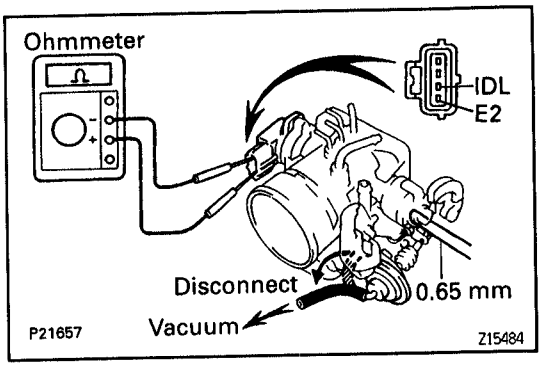

(b) Apply vacuum to the throttle opener.
(c) Insert a 0.65 mm (0.026 in.) thickness gauge between the throttle stop screw and stop lever.
(d) Connect the test probe of an ohmmeter to the terminals IDL and E2 of the sensor.

EG

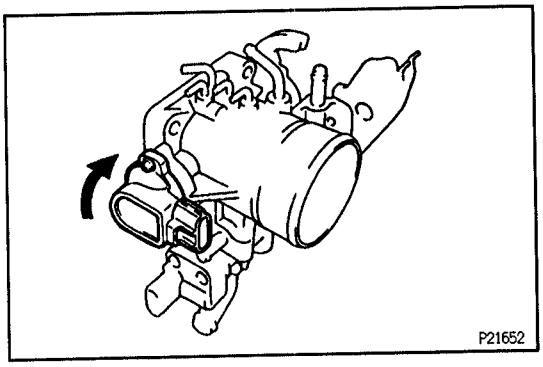

(e) Gradually turn the sensor clockwise until the ohmmeter deflects, and secure it with the 2 set screws.

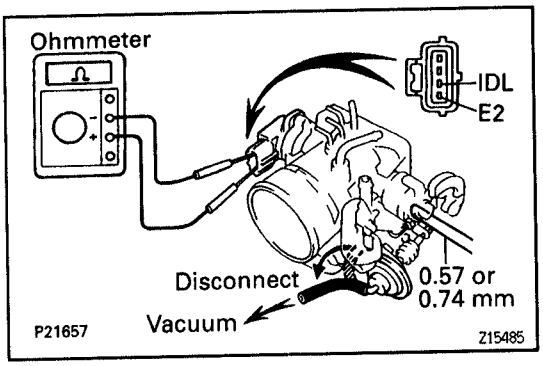

(f) Recheck the continuity between terminals IDL and E2.

Clearance between lever and stop screw	Continuity (IDL – E2)
0.57 mm (0.022 in.)	Continuity
0.74 mm (0.029 in.)	No continuity

THROTTLE BODY INSTALLATION

Installation is in the reverse order of removal.

IDLE AIR CONTROL (IAC) VALVE

ON–VEHICLE INSPECTION

EGSNN–02

INSPECT IAC VALVE OPERATION

(a) Initial conditions:
- Engine at normal operating temperature
- Idle speed check correctly
- Transmission in neutral position

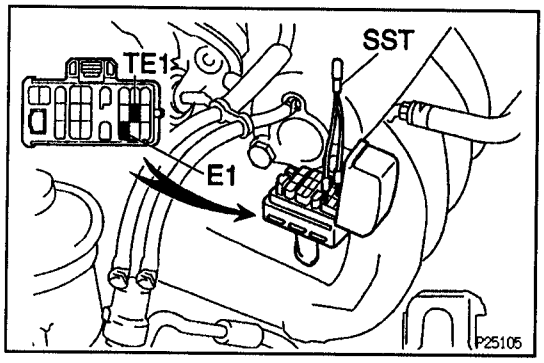

(b) Using SST, connect terminals TE1 and E1 of the DLC1.
SST 09843–18020

(c) After engine speed are kept at 1,000–1,500 rpm for 5 seconds, check that they return to idle speed.
If the engine speed operation is not as specified, check the IAC valve, wiring and ECM.

(d) Remove the SST.
SST 09843–18020

COMPONENTS FOR REMOVAL AND INSTALLATION

EG16H–07

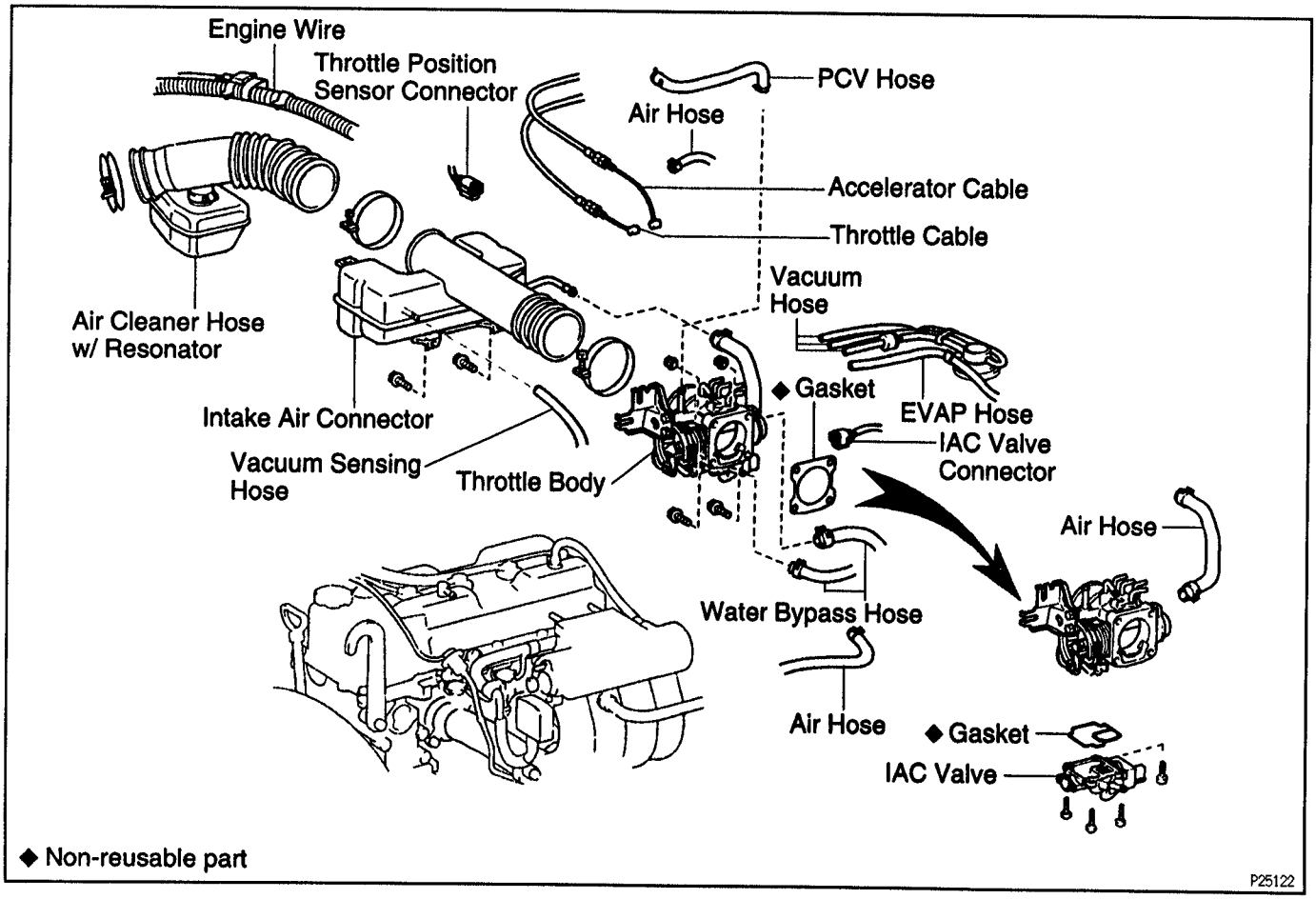

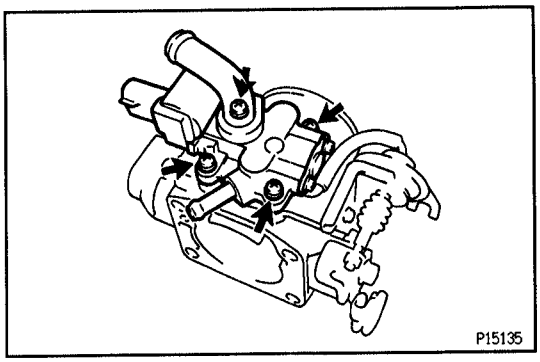

EG

IAC VALVE REMOVAL

EG16J–09

1. **REMOVE THROTTLE BODY**
   (See throttle body removal)
2. **REMOVE IAC VALVE**
   Remove the 4 screws, IAC valve and gasket.

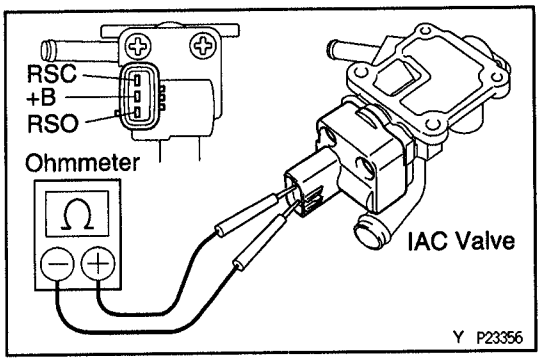

IAC VALVE INSPECTION

EG5NP–02

1. **INSPECT IAC VALVE RESISTANCE**
   NOTICE: "Cold" and "Hot" in the following sentences express the temperature of the coils themselves. "Cold" is from –10 °C (14°F) to 50°C (122°F) and "Hot" is from 50°C (122°F) to 100°C (212°F).
   Using an ohmmeter, measure the resistance between terminal +B and other terminals (RSC, RSO).
   Resistance:
   Cold: 17.0 – 24.5 Ω
   Hot: 21.5 – 28.5 Ω
   If resistance is not as specified, replace the IAC valve.
2. **INSPECT IAC VALVE OPERATION**

(a) Connect the positive (+) lead from the battery to terminal +B and negative (–) lead to terminal RSC, and check that the valve is closed.

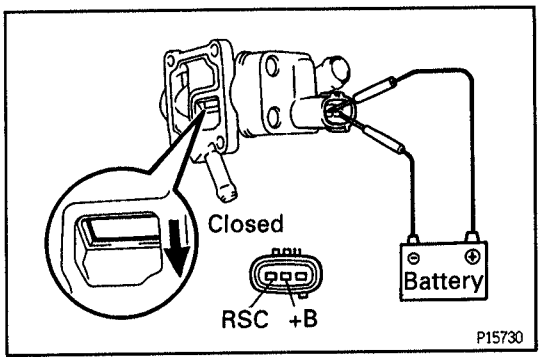

(b) Connect the positive (+) lead from the battery to terminal +B and negative (–) lead to terminal RSO, and check that the valve is open.

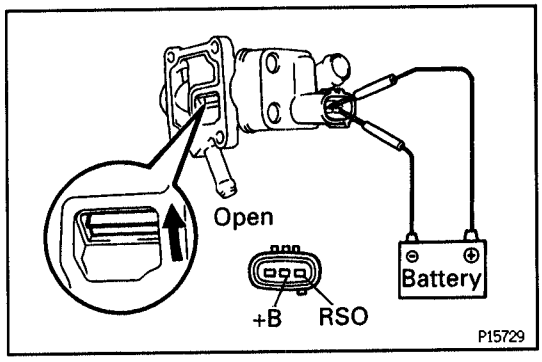

IAC VALVE INSTALLATION

EG587–03

1. **INSTALL IAC VALVE**

(a) Place a new gasket on the throttle body.
(b) Install the IAC valve with the 4 screws.

2. **INSTALL THROTTLE BODY**
   (See throttle body installation)

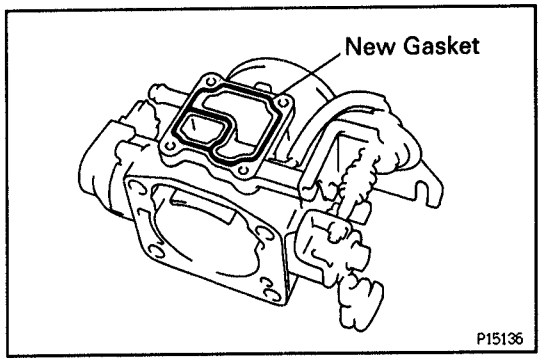

MASS AIR FLOW (MAF) METER

COMPONENTS FOR REMOVAL AND INSTALLATION

EG0YJ–0U

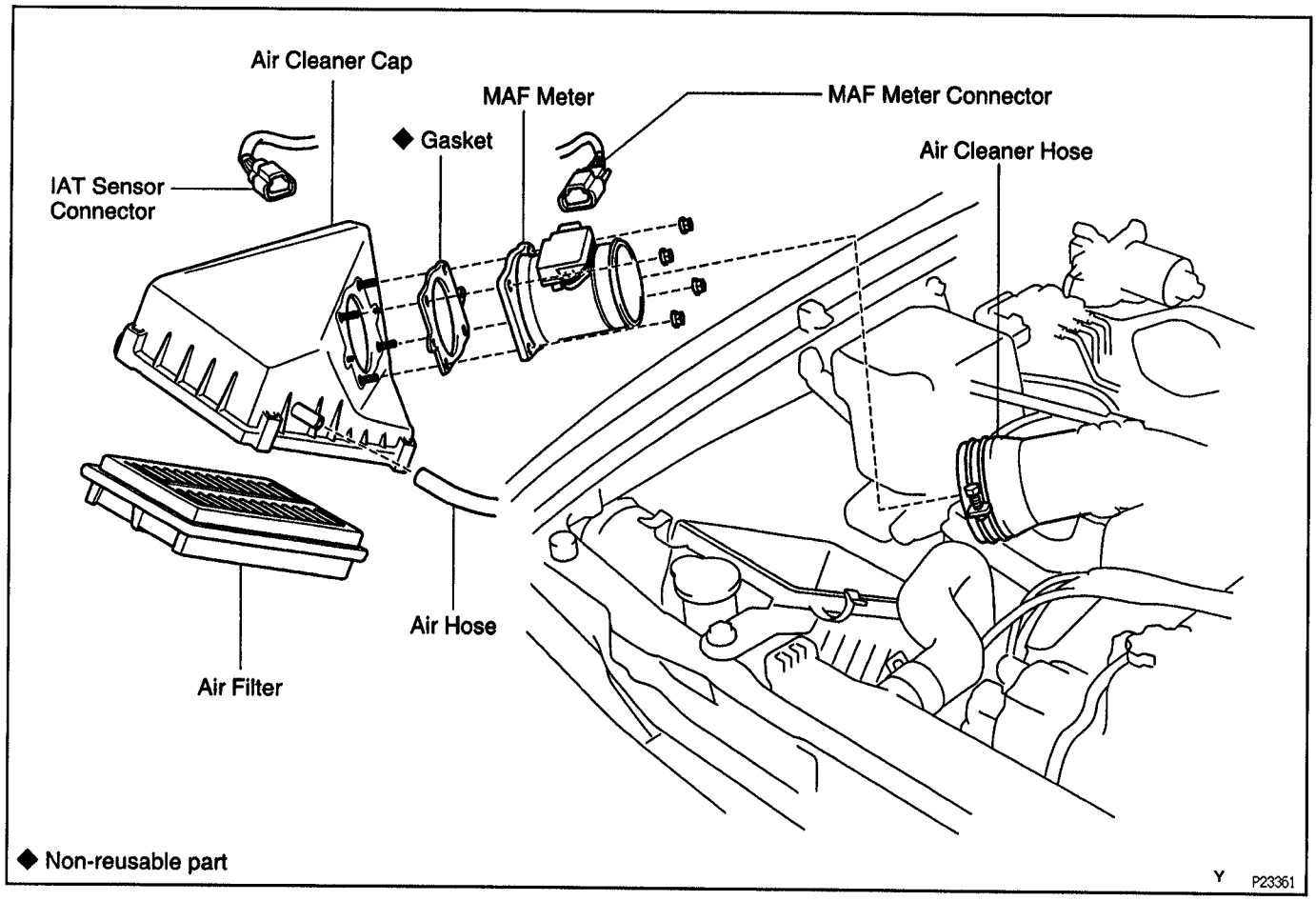

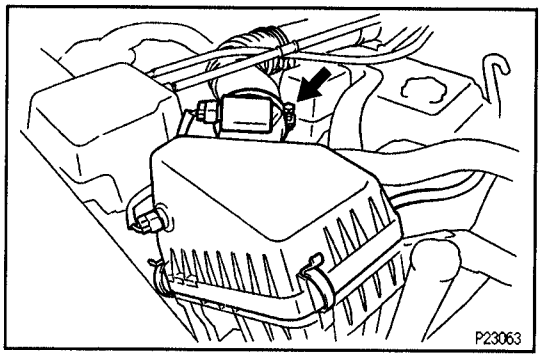

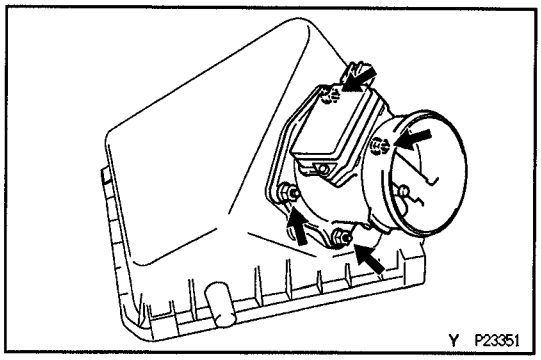

MAF METER REMOVAL

EG586–03

1. **REMOVE AIR CLEANER CAP WITH MAF METER**
   (a) Disconnect the MAF meter connector, IAT sensor connector and wire clamp.
   (b) Loosen the air cleaner hose clamp.
   (c) 3RZ–FE:
   Disconnect the air hose from the air cleaner cap.
   (d) Loosen the 4 clips, and remove the air cleaner cap together with the MAF meter.
2. **REMOVE MAF METER FROM AIR CLEANER CAP**
   Remove the 4 nuts, MAF meter and gasket.

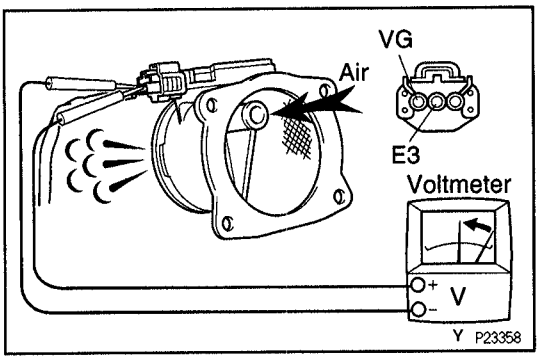

EG

EG589-03

MAF METER INSPECTION

INSPECT MAF METER OPERATION

(a) Connect the negative (–) terminal cable to the battery.
(b) Turn the ignition switch ON.
(c) Connect the MAF meter connector.
(d) Using a voltmeter, connect the positive (+) tester probe to terminal VG, and negative (–) tester probe to terminal E3.
(e) Blow air into the MAF meter, and check that the voltage fluctuates.
If operation is not as specified, replace the MAF meter.
(f) Turn the ignition switch LOCK.
(g) Disconnect the negative (–) terminal cable from the battery.
(h) Disconnect the MAF meter connector.

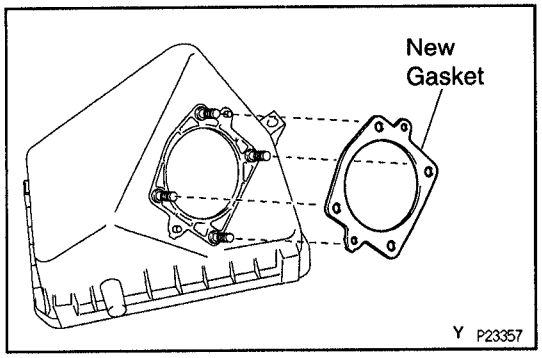

EG58A-04

MAF METER INSTALLATION

1. **INSTALL MAF METER TO AIR CLEANER CAP**
(a) Place a new gasket on the air cleaner cap.
(b) Install the MAF meter with the 4 nuts.
Torque: 8.5 N·m (85 kgf·cm, 74 in.·lbf)
2. **INSTALL MAF METER WITH AIR CLEANER CAP**

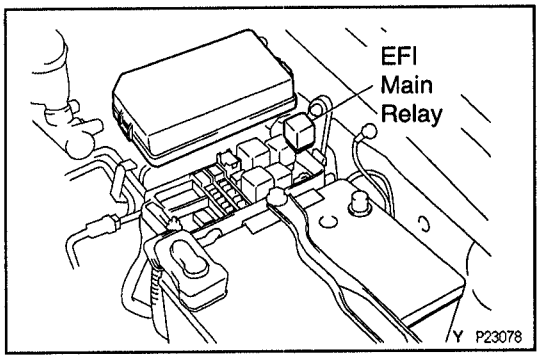

EG664-01

EFI MAIN RELAY

EFI MAIN RELAY INSPECTION

1. **REMOVE EFI MAIN RELAY**
LOCATION: In the engine compartment relay box.

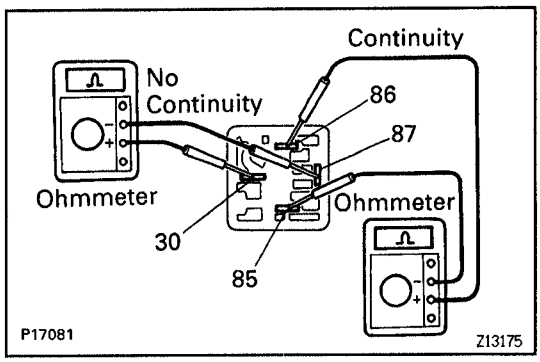

2. **INSPECT EFI MAIN RELAY**
A. Inspect relay continuity
(a) Using an ohmmeter, check that there is continuity between terminals 86 and 85.
If there is no continuity, replace the relay.
(b) Check that there is no continuity between terminals 87 and 30.
If there is continuity, replace the relay.

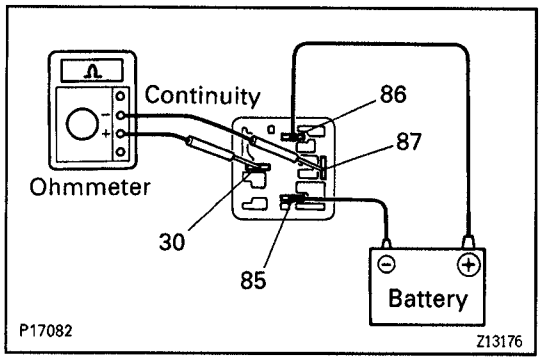

B. Inspect relay operation

(a) Apply battery positive voltage across terminals 86 and 85.

(b) Using an ohmmeter, check that there is continuity between terminals 87 and 30.
If operation is not as specified, replace the relay.

3. REINSTALL EFI MAIN RELAY

EG

CIRCUIT OPENING RELAY

COMPONENTS FOR REMOVAL AND INSTALLATION

EG1T6–07

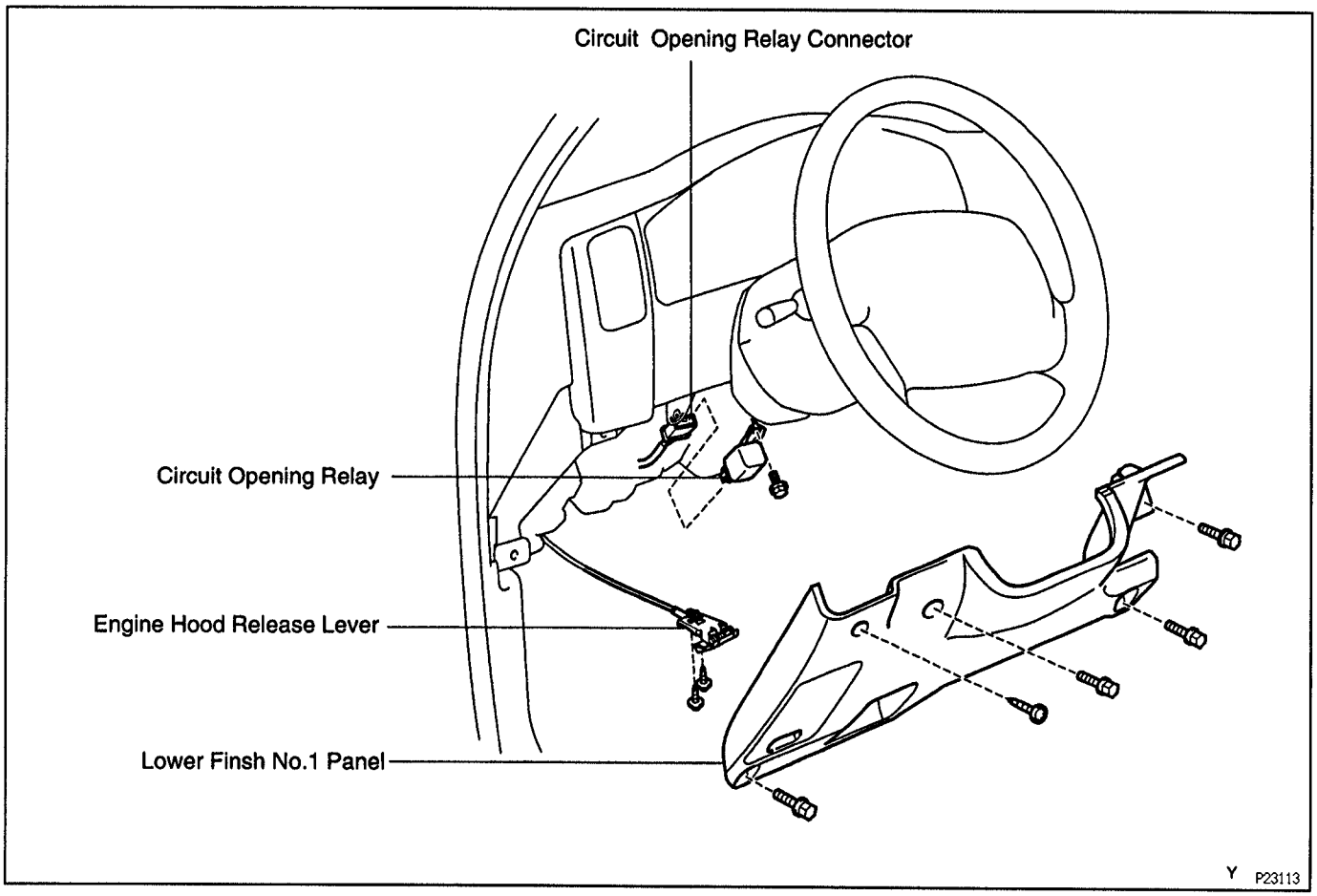

CIRCUIT OPENING RELAY INSPECTION

EG655–02

1. REMOVE LOWER FINISH NO.1 PANEL
2. REMOVE CIRCUIT OPENING RELAY
3. INSPECT CIRCUIT OPENING RELAY

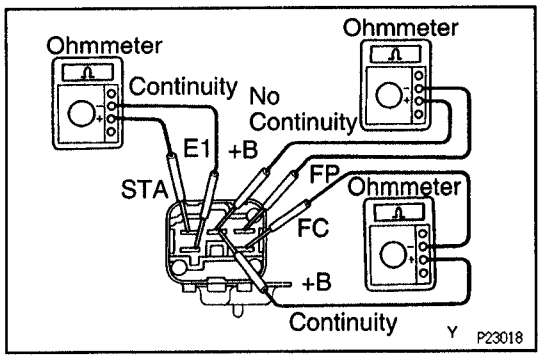

A. Inspect relay continuity

(a) Using and ohmmeter, check that there is continuity between terminals STA and E1.
If there is no continuity, replace the relay.

(b) Check that there is continuity between terminals +B and FC.
If there is no continuity, replace the relay.

(c) Check that there is no continuity between terminals +B and FP.
If there is continuity, replace the relay.

B. Inspect relay operation

(a) Apply battery positive voltage across terminals STA and E1.

(b) Using an ohmmeter, check that there is continuity between terminals +B and FP.

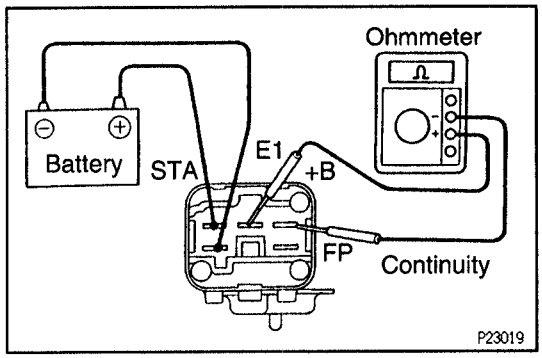

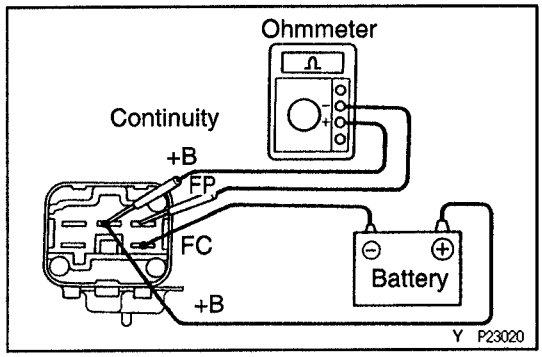

(c) Apply battery positive voltage across terminals +B and FC.

(d) Check that there is continuity between terminals +B and FP.
If operation is not as specified, replace the relay.

4. **REINSTALL CIRCUIT OPENING RELAY**
5. **REINSTALL LOWER FINISH NO.1 PANEL**

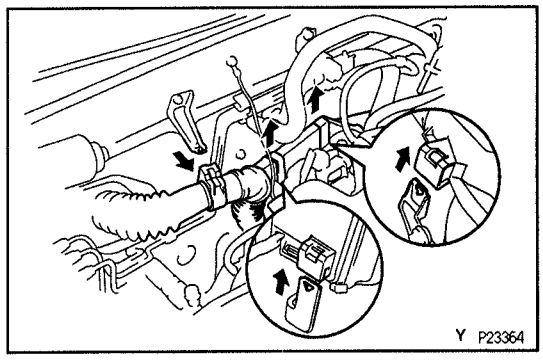

ENGINE COOLANT TEMPERATURE (ECT) SENSOR

EG6N8–02

ENGINE COOLANT TEMPERATURE SENSOR INSPECTION

1. **DRAIN ENGINE COOLANT**
2. **REMOVE ECT SENSOR**

(a) Disconnect the engine wire protector from the 3 brackets.

(b) Disconnect the ECT sensor connector.

(c) Using a 19 mm deep socket wrench, remove the ECT sensor and gasket.

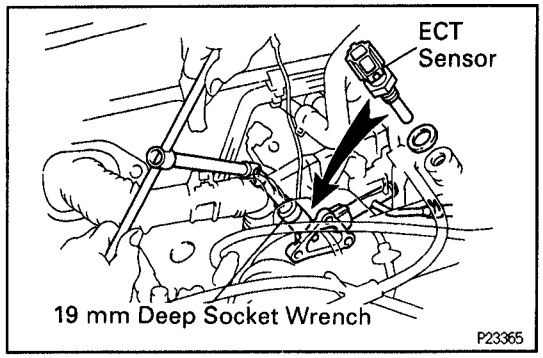

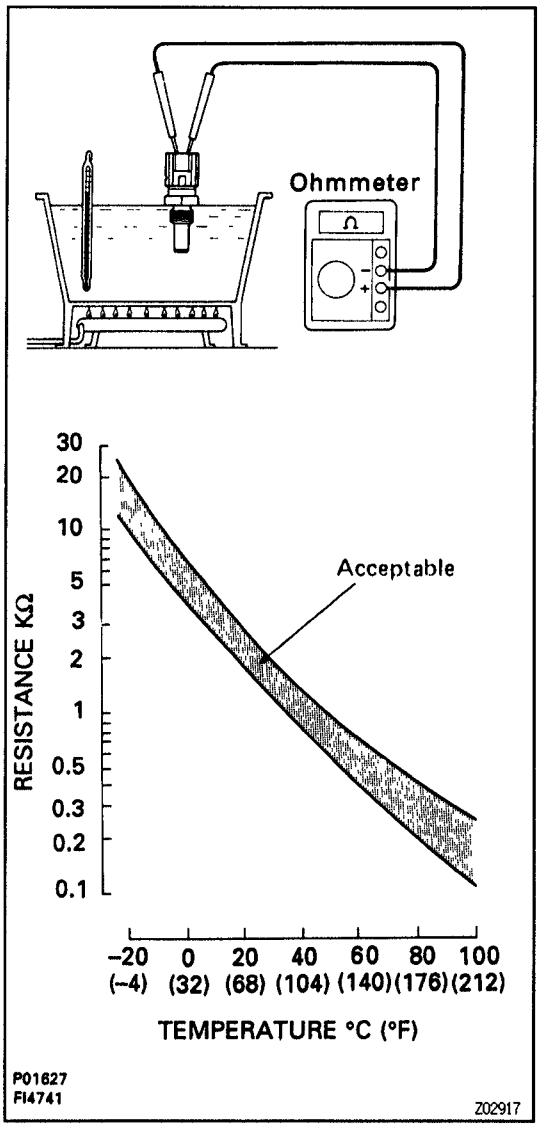

3. INSPECT ECT SENSOR

Using an ohmmeter, measure the resistance between the terminals.

Resistance:

Refer to the chart graph

If the resistance is not as specified, replace the ECT sensor.

4. REINSTALL ECT SENSOR

(a) Using a 19 mm deep socket wrench, install the ECT sensor and gasket.

Torque: 20 N·m (200 kgf·cm, 14 ft·lbf)

(b) Connect the ECT sensor connector.

(c) Install the engine wire protector to the 3 brackets.

5. REFILL ENGINE COOLANT

EG

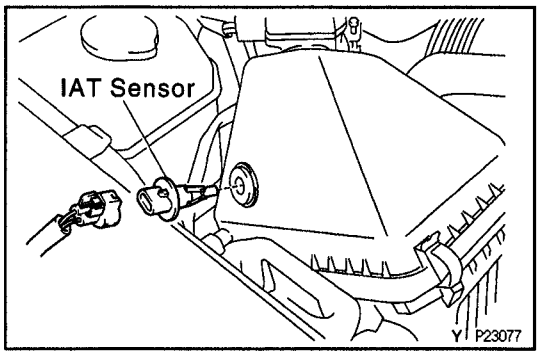

INTAKE AIR TEMPERATURE (IAT) SENSOR

IAT SENSOR INSPECTION

BG1AN–07

1. REMOVE IAT SENSOR

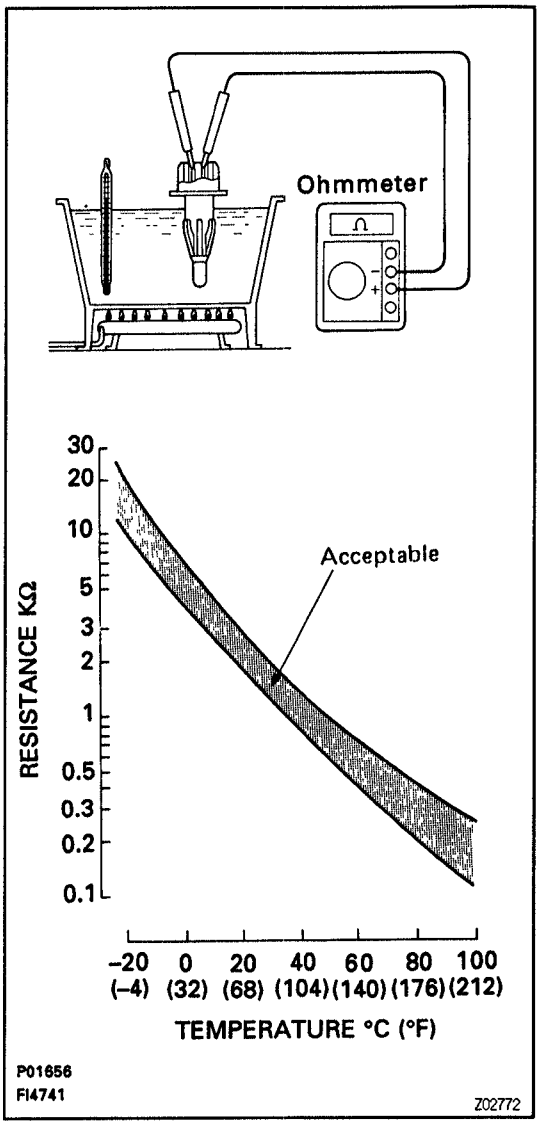

2. INSPECT IAT SENSOR

Using an ohmmeter, measure the resistance between the terminals.

Resistance:

Refer to the chart graph

If the resistance is not as specified, replace the IAT sensor.

3. REINSTALL IAT SENSOR

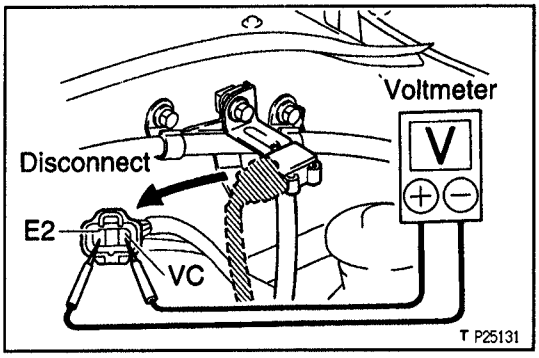

VAPOR PRESSURE SENSOR (3RZ–FE)

VAPOR PRESSURE SENSOR INSPECTION EG666-01

1. INSPECT POWER SOURCE VOLTAGE OF VAPOR PRESSURE SENSOR

(a) Disconnect the vapor pressure sensor connector.

(b) Turn the ignition switch ON.

(c) Using a voltmeter, measure the voltage between connector terminals VC and E2 of the wiring harness side.

Voltage:

4.5 – 5.5 V

(d) Turn the ignition switch to LOCK.

(e) Reconnect the vapor pressure sensor connector.

2. INSPECT POWER OUTPUT OF VAPOR PRESSURE SENSOR

(a) Turn the ignition switch ON.

(b) Disconnect the vacuum hose from the vapor pressure sensor.

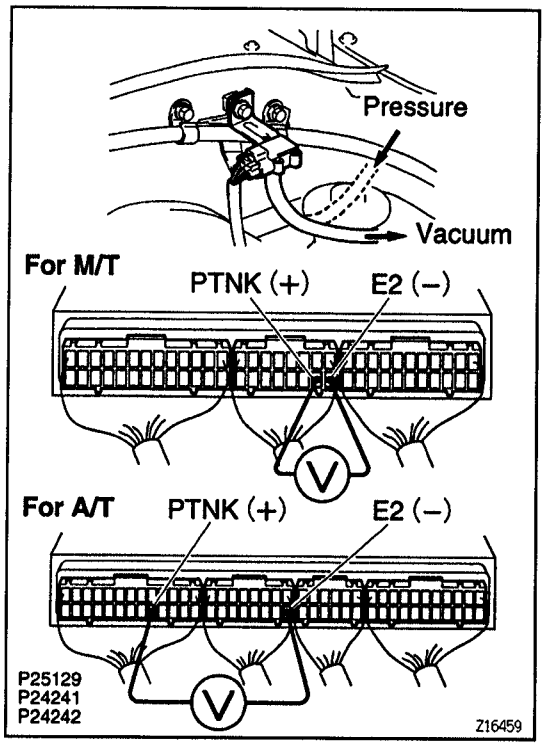

(c) Connect a voltmeter to terminals PTNK and E2 of the ECM, and measure the output voltage under the following conditions:

(1) Apply vacuum (2.0 kPa, 15 mmHg, 0.59 in.Hg) to the vapor pressure sensor.

Voltage:

1.3 – 2.1 V

(2) Release the vacuum from the vapor pressure sensor.

Voltage:

3.0 – 3.6 V

(3) Apply pressure (1.5 kPa, 15 gf/cm², 0.22 psi) to the vapor pressure sensor.

Voltage:

4.2 – 4.8 V

(d) Reconnect the vacuum hose to the vapor pressure sensor.

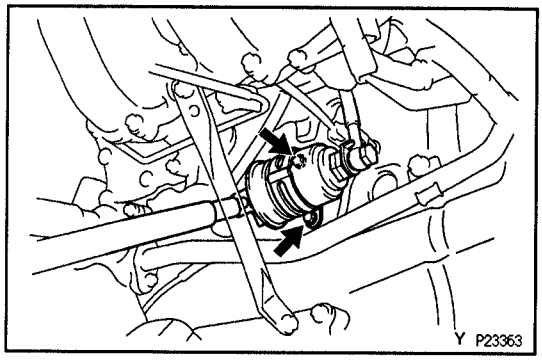

KNOCK SENSOR

KNOCK SENSOR INSPECTION

EGSNT–02

1. **REMOVE STARTER**
   (See starter removal in Starting System)
2. **REMOVE FUEL FILTER SET BOLTS**

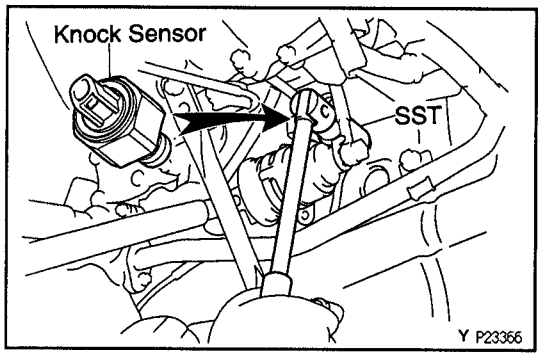

3. **REMOVE KNOCK SENSOR**

(a) Disconnect the knock sensor connector.

(b) Using SST, remove the knock sensor.
SST 09816–30010

4. **INSPECT KNOCK SENSOR**

Using an ohmmeter, check that there is no continuity between the terminal and body.
If there is continuity, replace the sensor.

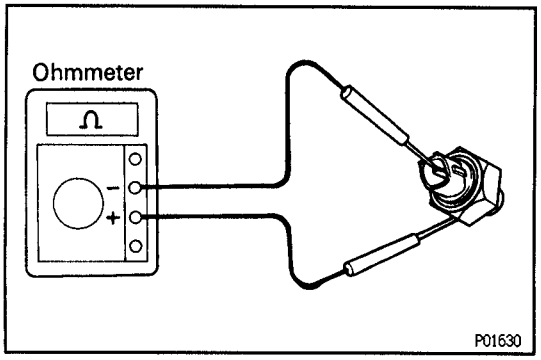

5. **REINSTALL KNOCK SENSOR**

(a) Using SST, install the knock sensor.
SST 09816–30010
Torque: 44 N·m (450 kgf·cm, 33 ft·lbf)

(b) Connect the knock sensor connector.

6. **REINSTALL FUEL FILTER SET BOLTS**
   Torque: 20 N·m (200 kgf·cm, 14 ft·lbf)
7. **REINSTALL STARTER**
   (See starter installation in Starting System)

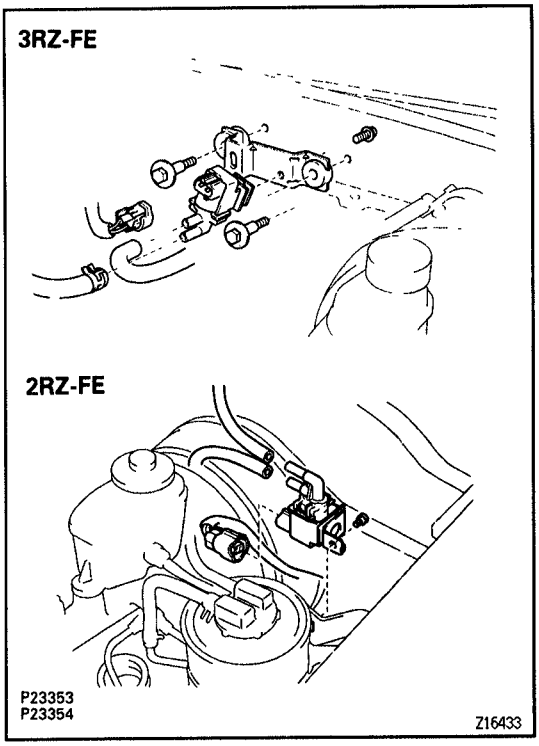

VSV FOR EVAP

EGSNU−02

VSV INSPECTION

1. REMOVE VSV

(a) Disconnect the connector and 2 EVAP hoses from the VSV.

(b) 3RZ−FE:
Remove the 2 bolt and VSV assembly.

(c) Remove the screw and VSV.

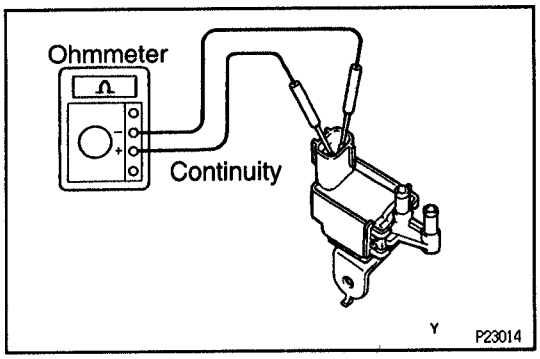

2. INSPECT VSV

A. Inspect VSV for open circuit

Using an ohmmeter, check that there is continuity between the terminals.

Resistance:

At 20°C (68°F): 30 −34 Ω

If there is no continuity, replace the VSV.

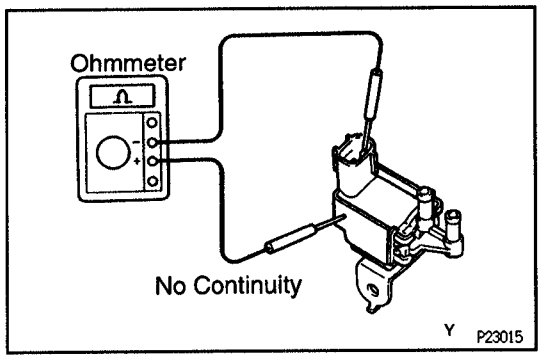

B. Inspect VSV for ground

Using an ohmmeter, check that there is no continuity between each terminal and the body.

If there is continuity, replace the VSV.

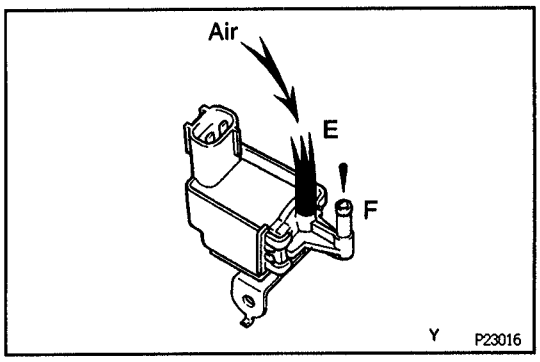

C. Inspect VSV operation

(a) Check that air does not flow from ports E to F.

NOTICE: Never apply more than 93 kPa (0.95 kgf/cm², 13.5 psi) of pressure compressed air to the VSV.

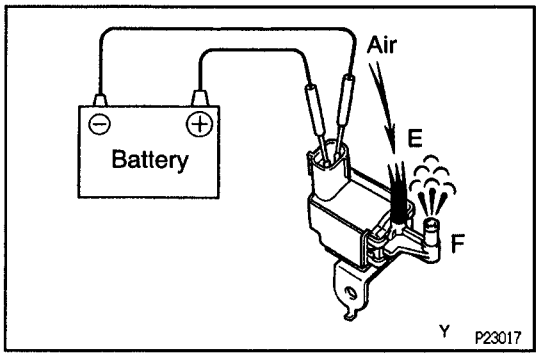

(b) Apply battery positive voltage across the terminals.
(c) Check that air flows from ports E to F.
If operation is not as specified, replace the VSV.

3. REINSTALL VSV

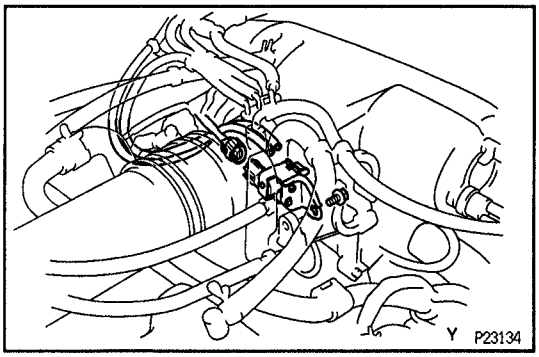

VSV FOR EGR

VSV INSPECTION

1. REMOVE VSV

(a) Remove the bolt.
(b) Disconnect the connector and 2 vacuum hoses from the VSV.

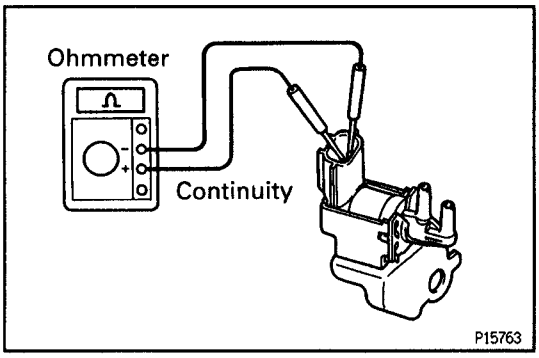

2. INSPECT VSV

A. Inspect VSV for open circuit

Using an ohmmeter, check that there is continuity between terminals.

Resistance:

At 20°C (68°F): 33 – 39 Ω

If there is no continuity, replace the VSV.

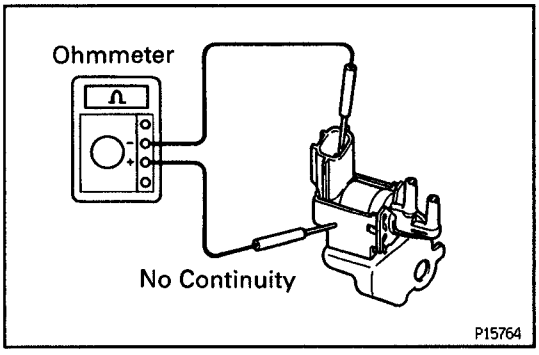

B. Inspect VSV for ground

Using an ohmmeter, check that there is no continuity between each terminal and the body.
If there is continuity, replace the VSV.

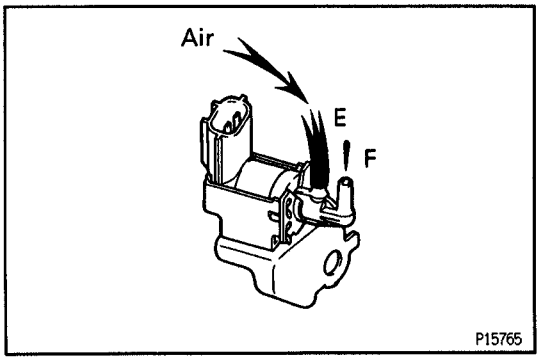

C. Inspect VSV operation

(a) Check that air does not flow from ports E to F.

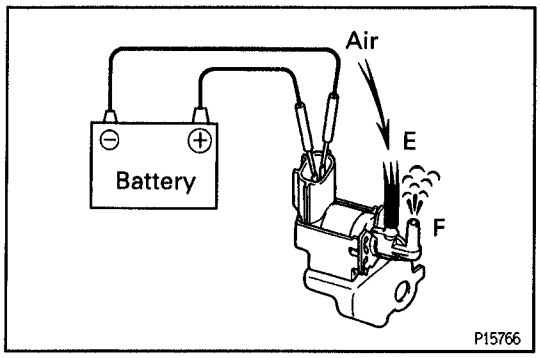

(b) Apply battery positive voltage across the terminals.
(c) Check that air flows from ports E to F.
If operation is not as specified, replace the VSV.

3. REINSTALL VSV

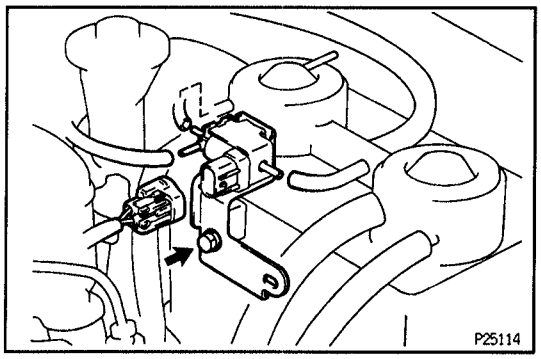

VSV FOR VAPOR PRESSURE SENSOR (3RZ–FE)

EG5DE–03

VSV INSPECTION

1. REMOVE VSV

(a) Disconnect the connector and 3 EVAP hoses from the VSV.
(b) Remove the bolt and VSV.

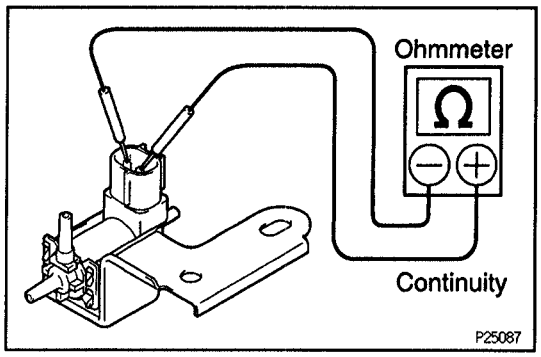

2. INSPECT VSV

A. Inspect VSV for open circuit

Using an ohmmeter, check that there is continuity between the terminals.

Resistance:

At 20°C (68°F): 37 – 44Ω

If there is no continuity, replace the VSV.

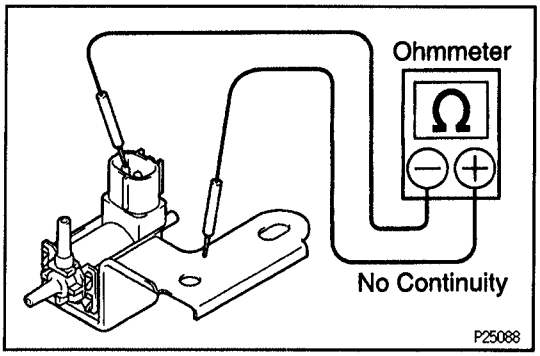

B. Inspect VSV for ground

Using an ohmmeter, check that there is no continuity between each terminal and the body.
If there is continuity, replace the VSV.

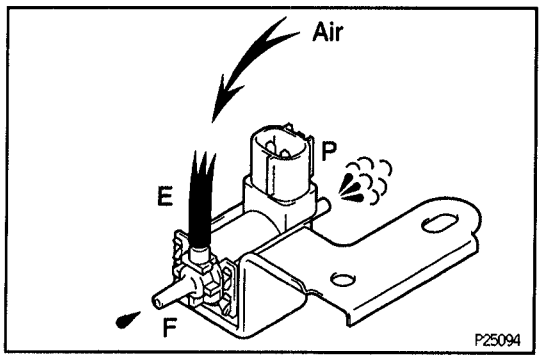

C. Inspect VSV operation

(a) Check that air flows from ports E to P, and does not flow from ports E to F.

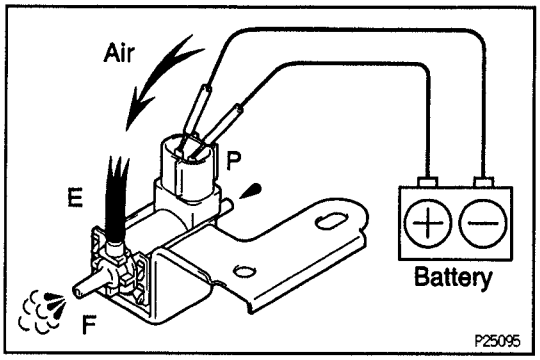

(b) Apply battery positive voltage across the terminals.
(c) Check that air flows from ports E to F, and does not flow from ports E to P.
If operation is not as specified, replace the VSV.

3. REINSTALL VSV

EGR GAS TEMPERATURE SENSOR

EG8NX-02

COMPONENTS FOR REMOVAL AND INSTALLATION

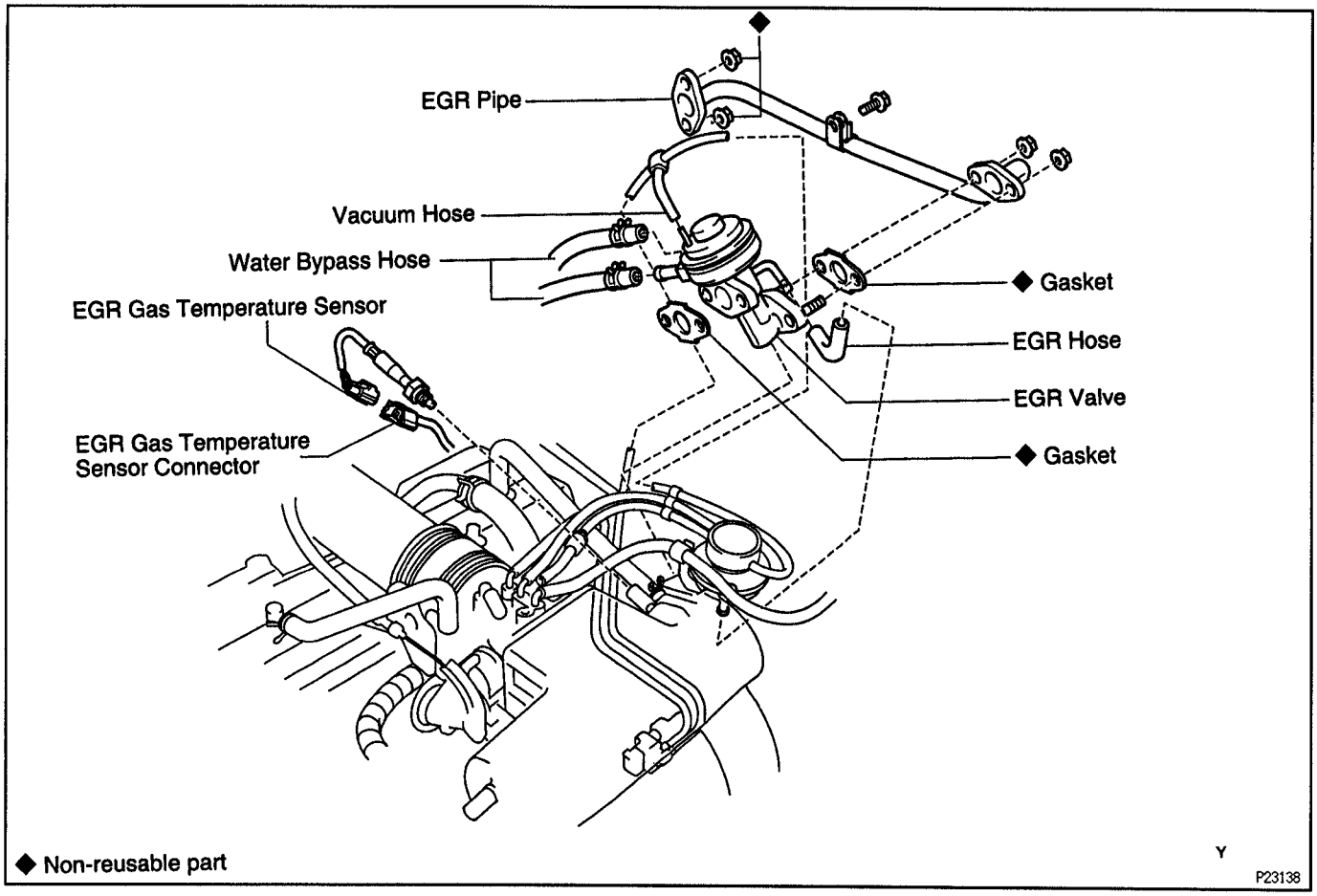

EG8NY-02

EGR GAS TEMPERATURE SENSOR INSPECTION

1. REMOVE EGR VALVE
(See EGR valve inspection in Emission Control System)

2. REMOVE EGR GAS TEMPERATURE SENSOR

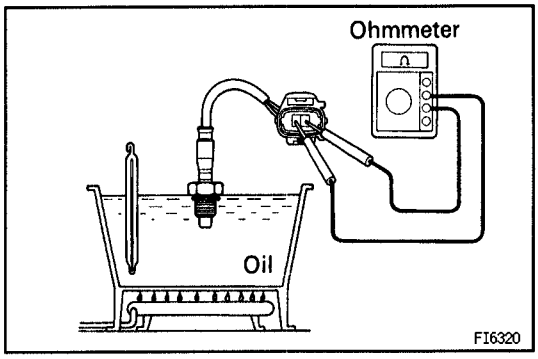

EG

3. INSPECT EGR GAS TEMPERATURE SENSOR

Using an ohmmeter, measure the resistance between the terminals.

Resistance:

At 50°C (122°F): 64 – 97 kΩ

At 100°C (212°F): 11 – 16 kΩ

At 150°C (302°F): 2 – 4 kΩ

If the resistance is not as specified, replace the sensor.

4. REINSTALL EGR GAS TEMPERATURE SENSOR

5. REINSTALL EGR VALVE

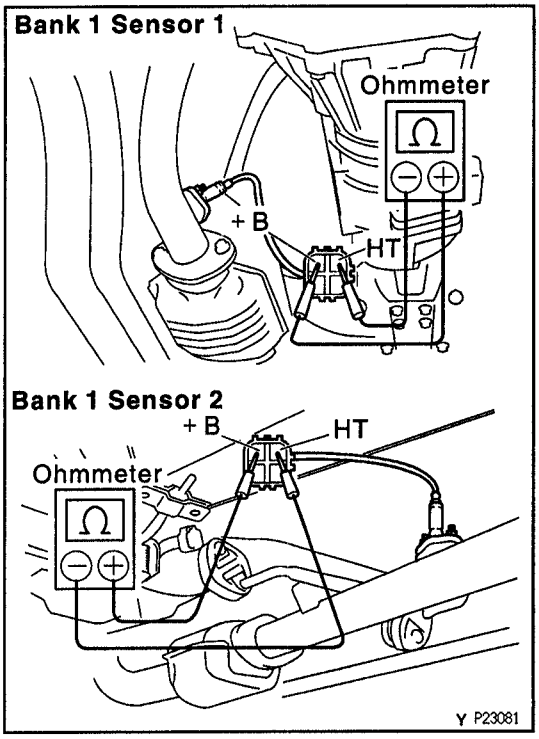

HEATED OXYGEN SENSOR

HEATED OXYGEN SENSORS INSPECTION

EG3KP–04

INSPECT HEATER RESISTANCE OF HEATED OXYGEN SENSORS

(a) Disconnect the heated oxygen sensor connector.

(b) Using an ohmmeter, measure the resistance between terminals +B and HT.

Resistance:

At 20°C (68°F):

Bank 1 Sensor 1: 5 – 7 Ω

Bank 1 Sensor 2: 11 – 16 Ω

If resistance is not as specified, replace the heated oxygen sensor.

(c) Reconnect the heated oxygen sensor connector.

ENGINE CONTROL MODULE (ECM)

COMPONENTS FOR REMOVAL AND INSTALLATION

EG0E8–0E

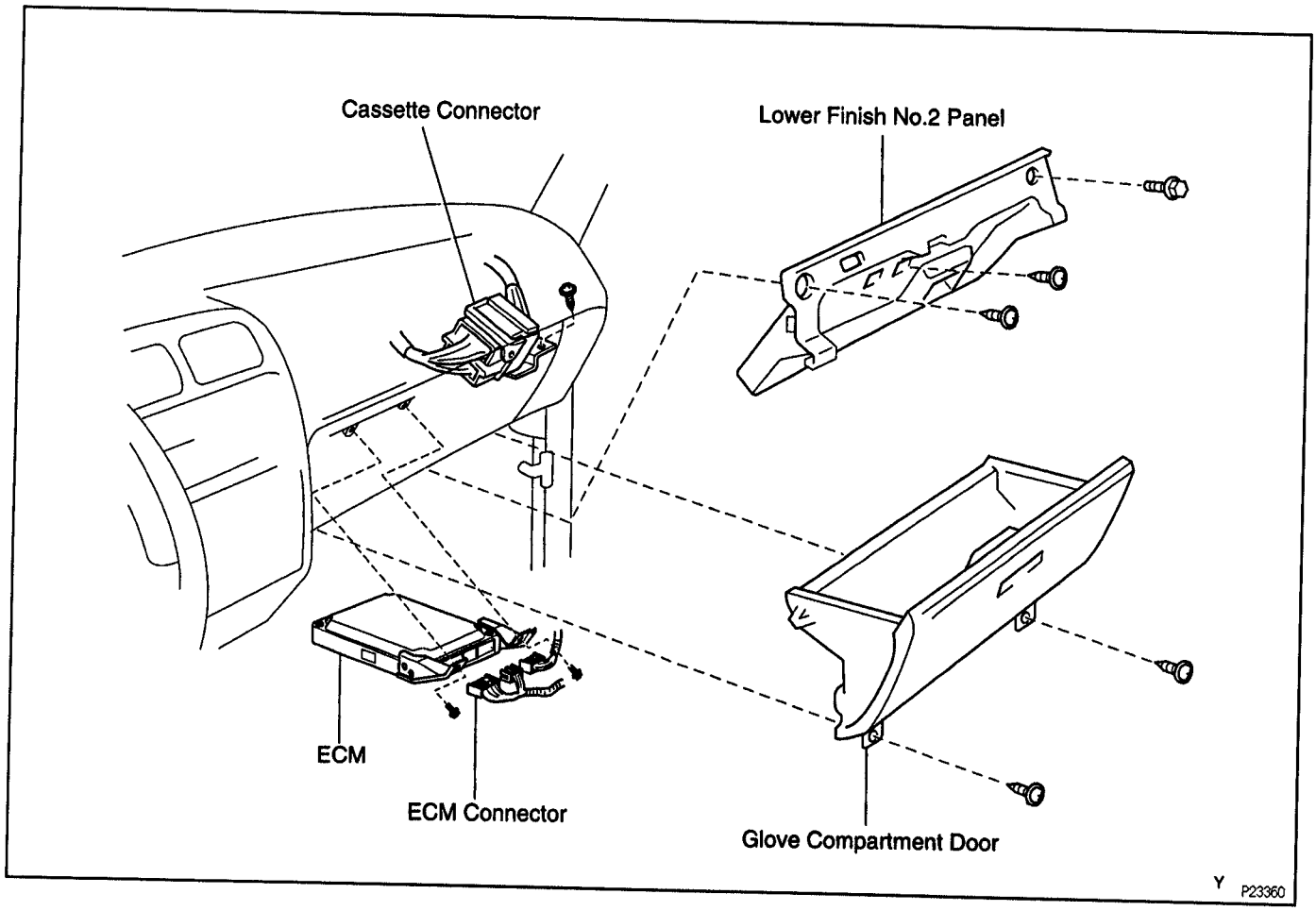

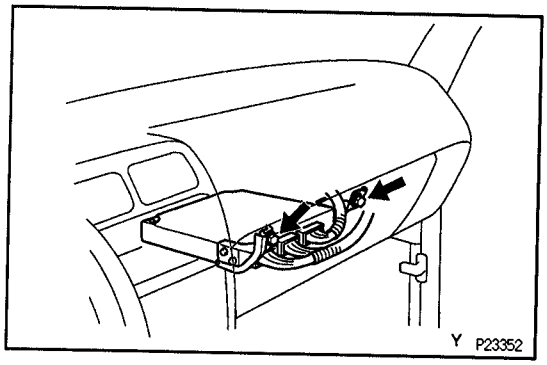

ECM REMOVAL

EG58G–03

1. REMOVE GLOVE COMPARTMENT DOOR
2. REMOVE LOWER FINISH NO.2 PANEL
3. REMOVE ECM

(a) 2RZ–FE, 3RZ–FE M/T:
Disconnect the 3 ECM connectors.

(b) 3RZ–FE A/T:
Disconnect the 4 ECM connectors.

(c) Remove the 2 bolts and ECM.

ECM INSPECTION

EG104–04

(See Engine Troubleshooting)

ECM INSTALLATION

EG057–01

Installation is in the reverse order of removal.

FUEL CUT RPM

EQ58H–04

FUEL CUTOFF RPM INSPECTION

1. **WARM UP ENGINE**
   Allow the engine to warm up to normal operating temperature.
2. **CONNECT TOYOTA HAND–HELD TESTER OR OBD II SCAN TOOL**
   (See step 2 in ignition timing inspection)

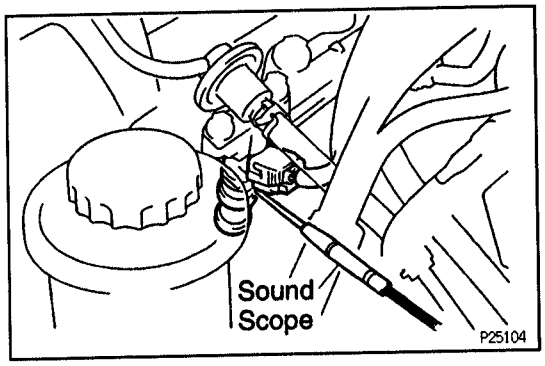

3. **INSPECT FUEL CUT OFF RPM**

(a) Increase the engine speed to at least 3,500 rpm.

(b) Using a sound scope, check for injector operating noise.

(c) Check that when the throttle lever is released, injector operation noise stops momentarily and then resumes.
HINT: Measure with the A/C OFF.

Fuel return rpm:

M/T:

1,400 rpm

A/T:

1,500 rpm

4. **DISCONNECT TOYOTA HAND–HELD TESTER OR OBD II SCAN TOOL**

SERVICE SPECIFICATIONS

SERVICE DATA

EG0ZA–0T

Fuel pressure regulator	Fuel pressure	at no vacuum	265 – 304 kPa (2.7 – 3.1 kgf/cm², 38 – 44 psi)
Fuel pump	Resistance	at 20°C (68°F)	0.2 – 3.0 Ω
Injector (2RZ–FE)	Resistance	at 20°C (68°F)	12 – 16 Ω
	Injection volume		62 – 79 cm³ (3.8 – 4.8 cu in.) per 15 seconds
	Difference between each cylinder		5 cm³ (0.3 cu in.) or less
	Fuel leakage		1 drop or less per 3 minutes
Injector (3RZ–FE)	Resistance	at 20°C (68°F)	12 – 16 Ω
	Injection volume		69 – 88 cm³ (4.2 – 5.4 cu in.) per 15 seconds
	Difference between each cylinder		5 cm³ (0.3 cu in.) or less
	Fuel leakage		1 drop or less per 3 minutes
Throttle body	Throttle valve fully closed angle		6°
	Throttle opener setting speed		1,200 – 1,500 rpm
TP sensor	Clearance between stop screw and lever		
	0 mm (0 in.)	VTA – E2	0.2 – 5.7 kΩ
	0.57 mm (0.022 in.)	IDL – E2	2.3 kΩ or less
	0.74 mm (0.029 in.)	IDL – E2	Infinity
	Throttle valve fully open	VTA – E2	2.0 – 10.2 kΩ
	–	VC – E2	2.5 – 5.9 kΩ
IAC valve	Resistance (+B – RSC or RSO)	at cold	17.0 – 24.5 Ω
		at hot	21.5 – 28.5 Ω
ECT sensor	Resistance	at –20°C (–4°F)	10 – 20 kΩ
		at 0°C (32°F)	4 – 7 kΩ
		at 20°C (68°F)	2 – 3 kΩ
		at 40°C (104°F)	0.9 – 1.3 kΩ
		at 60°C (140°F)	0.4 – 0.7 kΩ
		at 80°C (176°F)	0.2 – 0.4 kΩ
IAT sensor	Resistance	at –20°C (–4°F)	10 – 20 kΩ
		at 0°C (32°F)	4 – 7 kΩ
		at 20°C (68°F)	2 – 3 kΩ
		at 40°C (104°F)	0.9 – 1.3 kΩ
		at 60°C (140°F)	0.4 – 0.7 kΩ
		at 80°C (176°F)	0.2 – 0.4 kΩ
Vapor pressure sensor	Power source voltage		4.5 –5.5 V
VSV for EVAP	Resistance	at 20°C (68°F)	30 – 34 Ω
VSV for vapor pressure sensor	Resistance	at 20°C (68°F)	37 – 44 Ω
VSV for EGR	Resistance	at 20°C (68°F)	33 – 39 Ω
EGR gas temp. sensor	Resistance	at 50°C (122°F)	64 – 97 kΩ
		at 100°C (212°F)	11 – 16 kΩ
		at 150°C (302°F)	2 – 4 kΩ

Heated oxygen sensor	Heater coil resistance Bank 1 Sensor 1 at 20°C (68°F) Bank 1 Sensor 2 at 20°C (68°F)	 5 – 7 Ω 11 – 16 Ω
Fuel cut RPM	Fuel return rpm M/T A/T	1,400 rpm 1,500 rpm

EG0EE–1M

TORQUE SPECIFICATIONS

Part tightened	N·m	kgf·cm	ft·lbf
Fuel line (Union bolt type)	29	300	22
Fuel line (Flare nut type) w/ SST	30	310	22
Fuel pump bracket assembly x Fuel tank	3.5	35	31 in.·lbf
Fuel pressure regulator x Delivery pipe	8.8	90	78 in.·lbf
Fuel inlet pipe x Fuel filter	29	300	22
Delivery pipe x Cylinder head	21	210	15
Fuel inlet pipe x Delivery pipe	29	300	22
Throttle body x Air intake chamber	20	200	14
Fuel evaporation vent tube x Fuel tank	1.5	15	13 in.·lbf
Fuel tank filler pipe x Fuel tank	3.5	35	31 in.·lbf
Fuel tank filler pipe support bracket	29	300	22
Fuel tank x Body	29	300	22
Fuel tank band x Body	61	620	42
Fuel tank protector bracket x Body	29	300	22
Fuel tank protector x Fuel tank	29	300	22
MAF meter x Air cleaner cap	8.5	85	74 in.·lbf
ECT sensor x Cylinder head	20	200	14
Knock sensor x Cylinder block	44	450	33
Fuel filter x Cylinder block	20	200	14

COOLING SYSTEM

PREPARATION

EQUIPMENT

EG06U–0G

Heater	Thermostat
Radiator cap tester	
Thermometer	Thermostat
Torque wrench	

ENGINE COOLANT

EG06V–0G

Item	Capacity	Classification
2WD		Ethylene–glycol base
M/T	8.0 liters (8.5 US qts, 7.0 Imp. qts)	
A/T	7.8 liters (8.2 US qts, 6.9 Imp. qts)	
4WD		
M/T	8.3 liters (8.8 US qts, 7.3 Imp. qts)	
A/T	8.2 liters (8.7 US qts, 7.2 Imp. qts)	

COOLANT CHECK AND REPLACEMENT

1. **CHECK ENGINE COOLANT LEVEL AT RADIATOR RESERVOIR** EG8NZ–02

The coolant level should be between the "L" and "F" lines.

If low, check for leaks and add coolant up to the "F" line.

2. **CHECK ENGINE COOLANT QUALITY**

(a) Remove the radiator cap.

CAUTION: To avoid the danger of being burned, do not remove the radiator cap while the engine and radiator are still hot, as fluid and steam can be blown out under pressure.

(b) There should not be any excessive deposits of rust or scales around the radiator cap or radiator filler hole, and the coolant should be free from oil.

If excessively dirty, replace the coolant.

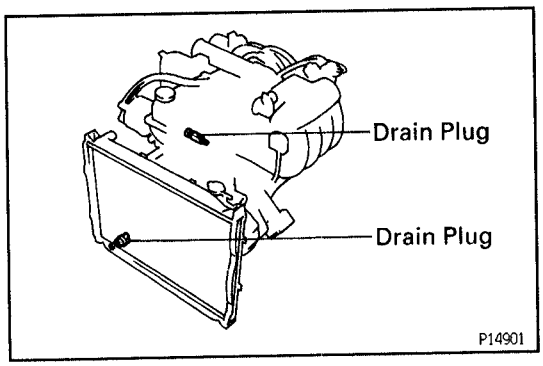

(c) Reinstall the radiator cap.

3. REPLACE ENGINE COOLANT

(a) Remove the radiator cap.

CAUTION: To avoid the danger of being burned, do not remove the radiator cap while the engine and radiator are still hot, as fluid and steam can be blown out under pressure.

(b) Drain the coolant from the radiator and cylinder drain plugs. (Engine coolant drain plug at the right of cylinder block.)

(c) Close the drain plugs.

Torque (Engine coolant drain plug):

24.5 N·m (250 kgf·cm, 18 ft·lbf)

(d) Slowly fill the system with coolant.

- Use a good brand of ethylene–glycol base coolant and mix it according to the manufacturer's directions.
- Using coolant which includes more than 50 % ethylene–glycol (but not more than 70 %) is recommended.

NOTICE:

- **Do not use an alcohol type coolant.**
- **The coolant should be mixed with demineralized water or distilled water.**

Capacity (w/ Heater):

2WD

M/T

8.0 liters (8.5 US qts, 7.0 Imp. qts)

A/T

7.8 liters (8.2 US qts, 6.9 Imp. qts)

4WD

M/T

8.3 liters (8.8 US qts, 7.3 Imp. qts)

A/T

8.2 liters (8.7 US qts, 7.2 Imp. qts)

(e) Reinstall the radiator cap.

(f) Warm up the engine and check for leaks.

(g) Recheck the coolant level and refill as necessary.

WATER PUMP

COMPONENTS FOR REMOVAL AND INSTALLATION

EGSPO–02

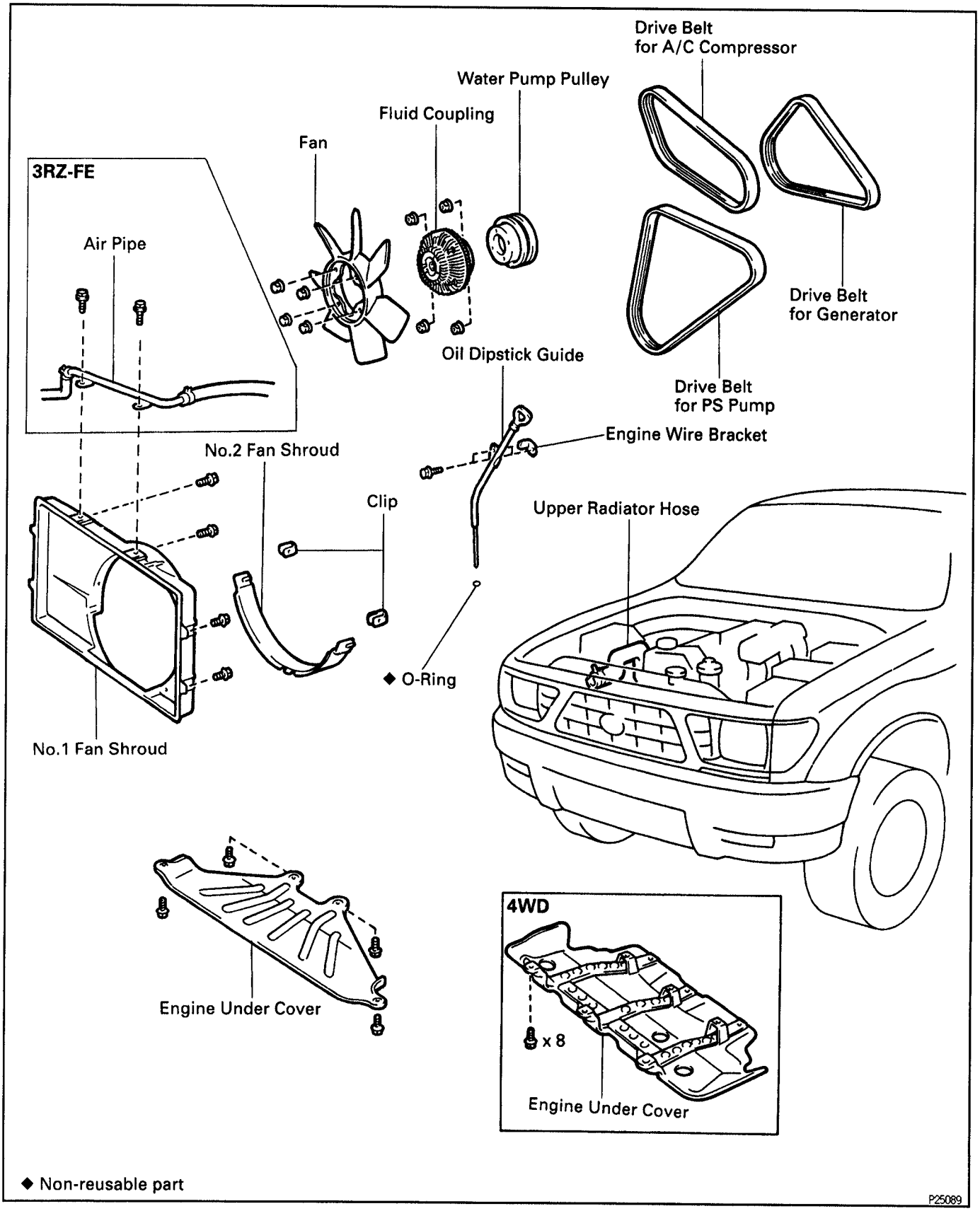

◆ Non-reusable part

P25089

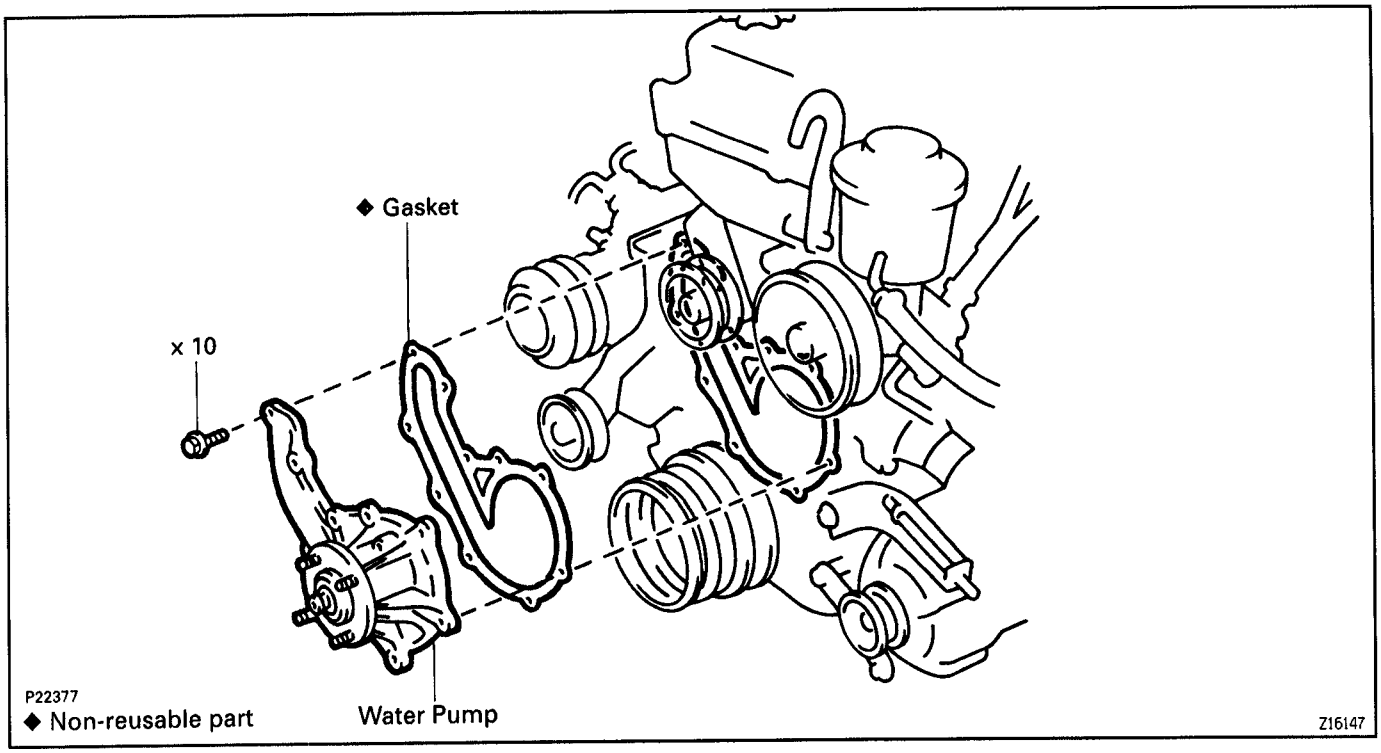

EQSP1–02

WATER PUMP REMOVAL

1. **REMOVE ENGINE UNDER COVER**
2. **DRAIN ENGINE COOLANT**
3. **3RZ–FE:**
   DISCONNECT AIR PIPE
   Remove the 2 bolts and disconnect the air pipe from the fan shroud.
4. **DISCONNECT UPPER RADIATOR HOSE FROM RADIATOR**
5. **REMOVE OIL DIPSTICK GUIDE**

(a) Remove the bolt, dipstick guide and engine wire bracket.

(b) Remove the O–ring from the dipstick guide.
INSTALLATION HINT: Use a new O–ring.

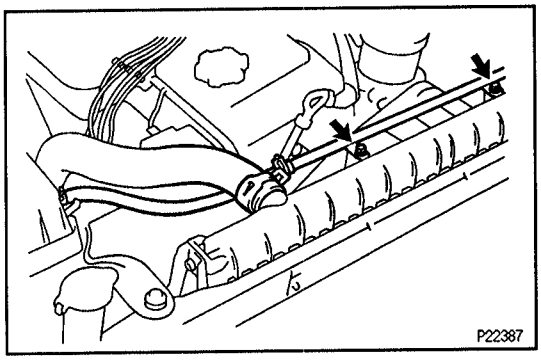

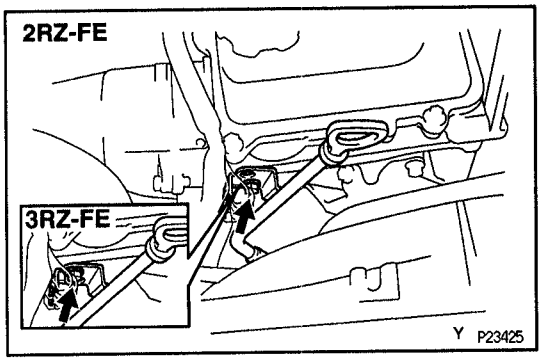

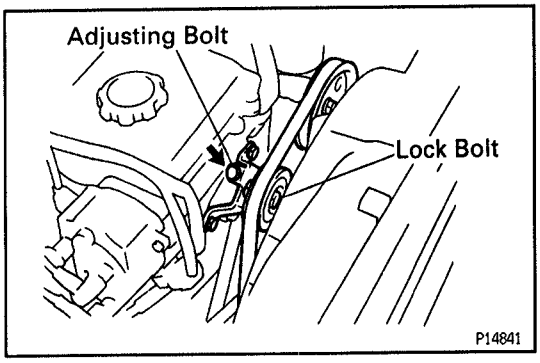

6. **w/ PS:**
   REMOVE DRIVE BELT FOR PS PUMP
   Loosen the lock bolt and adjusting bolt, and remove the drive belt.

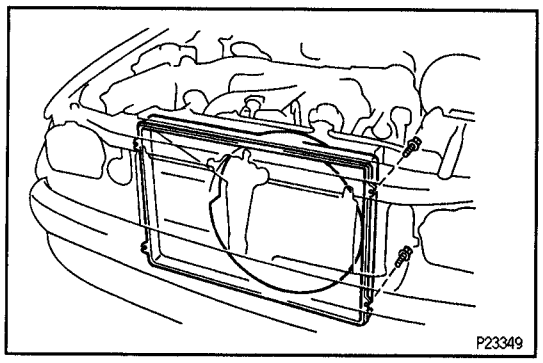

7. REMOVE FAN SHROUDS

(a) Remove the 2 clips and No.2 fan shroud.

(b) Remove the 4 bolts and No.1 fan shroud.

8. w/ A/C:
REMOVE DRIVE BELT FOR A/C COMPRESSOR

Loosen the idler pulley nut and adjusting bolt, and remove the drive belt.

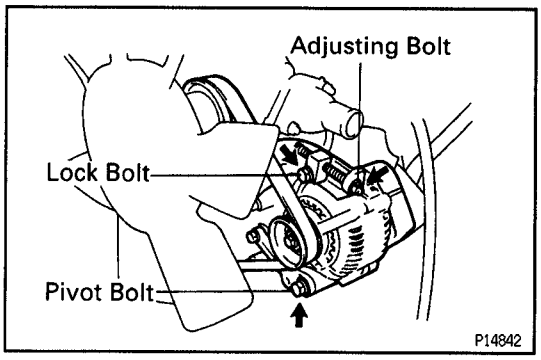

9. REMOVE DRIVE BELT FOR GENERATOR, FAN WITH FLUID COUPLING AND WATER PUMP PULLEY

(a) Stretch the belt and loosen the water pump pulley nuts.

(b) Loosen the lock, pivot and adjusting bolts of the generator, and remove the drive belt.

(c) Remove the 4 water pump pulley nuts.
Torque: 21 N·m (210 kgf·cm, 16 ft·lbf)

(d) Pull out the fan together with the fluid coupling and water pump pulley.

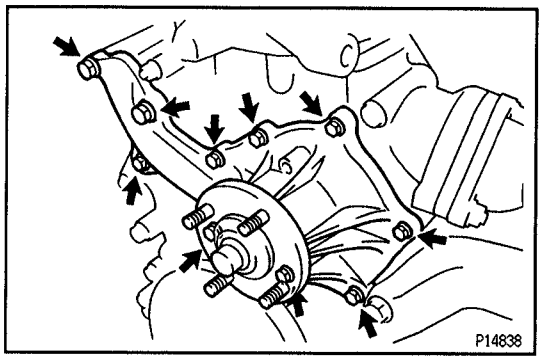

10. REMOVE WATER PUMP

Remove the 10 bolts, water pump and gasket.
Torque:
14 mm head bolt : 24.5 N·m (250 kgf·cm, 18 ft·lbf)
12 mm head bolt : 8.9 N·m (90 kgf·cm, 78 in.·lbf)

INSTALLATION HINT: Use a new gasket.

WATER PUMP COMPONENTS INSPECTION EGONG-06

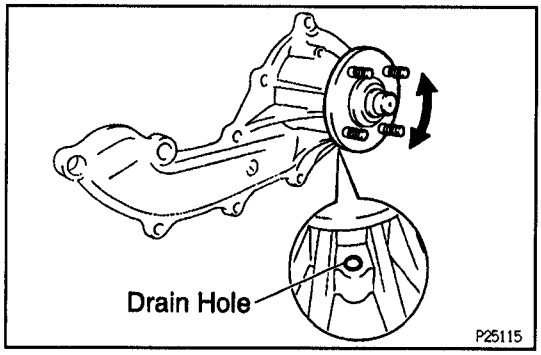

1. INSPECT WATER PUMP

(a) Visually check the drain hole for coolant leakage.
If leakage is found, replace the water pump.

(b) Turn the pulley, and check that the water pump bearing moves smoothly and quietly.
If necessary, replace the water pump.

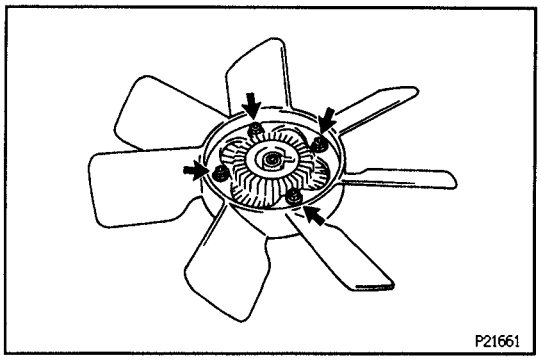

2. INSPECT FLUID COUPLING

(a) Remove the 4 nuts and fan from the fluid coupling.

(b) Check the fluid coupling for damage and silicon oil leakage.
If necessary, replace the fluid coupling.

(c) Install the fan and fluid coupling with the 4 nuts.
Torque: 5.5 N·m (55 kgf·cm, 49 in.·lbf)

E0065E–01

WATER PUMP INSTALLATION

Installation is in the reverse order of removal.

THERMOSTAT

E013D–13

COMPONENTS FOR REMOVAL AND INSTALLATION

EG

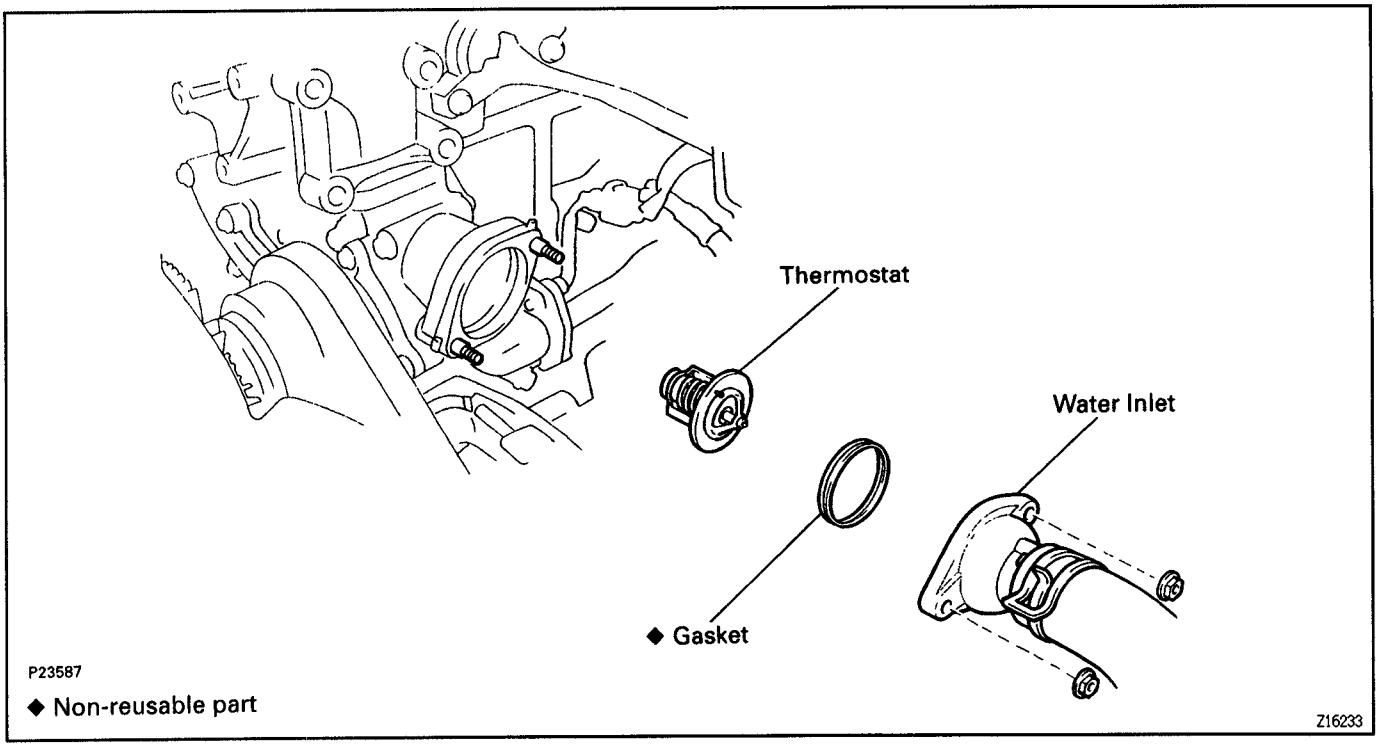

E01J3–0A

THERMOSTAT REMOVAL

HINT: Removal of the thermostat would have an adverse effect, causing a lowering of cooling efficiency. Do not remove the thermostat, even if the engine tends to overheat.

1. **DRAIN ENGINE COOLANT**

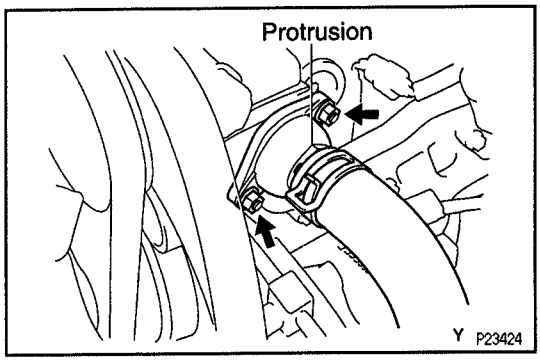

2. **DISCONNECT WATER INLET WITH LOWER RADIATOR HOSE, AND REMOVE THERMOSTAT**

(a) Remove the 2 nuts holding the water inlet to the inlet housing, and disconnect the water inlet from the inlet housing.
(b) Remove the thermostat.
(c) Remove the gasket from the thermostat.

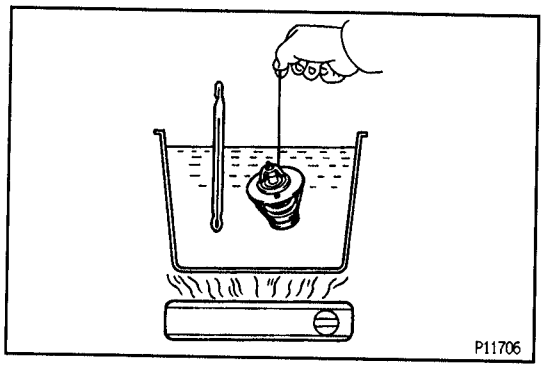

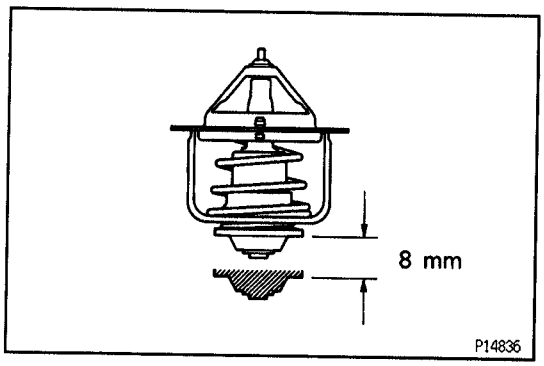

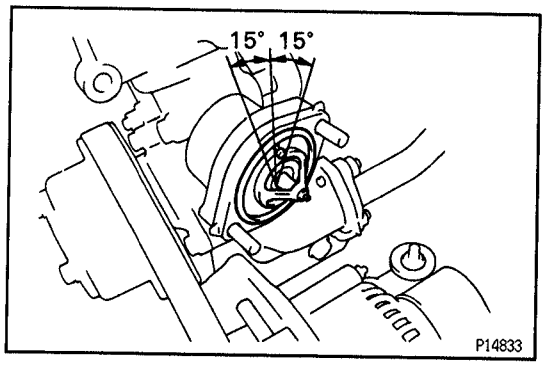

THERMOSTAT INSPECTION

EGSP2-02

INSPECT THERMOSTAT

HINT: The thermostat is numbered with the valve opening temperature.

(a) Immerse the thermostat in water and gradually heat the water.

(b) Check the valve opening temperature.

Valve opening temperature:

80 – 84°C (176 – 183°F)

If the valve opening temperature is not as specified, replace the thermostat.

(c) Check the valve lift.

Valve lift:

At 95°C (203°F): 8 mm (0.31 in.) or more

If the valve lift is not as specified, replace the thermostat.

(d) Check that the valve is fully closed when the thermostat is at low temperatures (below 40°C (104°F)).

If not closed, replace the thermostat.

THERMOSTAT INSTALLATION

EGSP3-02

1. PLACE THERMOSTAT IN WATER INLET HOUSING

(a) Install a new gasket to the thermostat.

(b) Align the jiggle valve of the thermostat with the protrusion of the water inlet housing, and insert the thermostat in the water inlet housing.

HINT: The jiggle valve may be set within 15° of either side of the prescribed position.

2. CONNECT WATER INLET WITH LOWER RADIATOR HOSE

Install the water inlet with the 2 nuts.

HINT: Facing the top mark (protrusion) upward.

Torque: 20 N·m (200 kgf·cm, 15 ft·lbf)

3. FILL WITH ENGINE COOLANT

4. START ENGINE AND CHECK FOR LEAKS

EG

RADIATOR

EG074–03

RADIATOR CLEANING

Using water or a steam cleaner, remove any mud or dirt from the radiator core.

NOTICE: If using a high pressure type cleaner, be careful not to deform the fins of the radiator core. (i.e. Maintain a distance between the cleaner nozzle radiator core)

EG

EG00U–01

RADIATOR INSPECTION

1. **REMOVE RADIATOR CAP**

CAUTION: To avoid the danger of being burned, do not remove the radiator cap while the engine and radiator are still hot, as fluid and steam can be blown out under pressure.

2. **INSPECT RADIATOR CAP**

NOTICE: If the radiator cap has contaminations, always rinse it with water.

Using a radiator cap tester, pump the tester and measure the vacuum valve opening pressure.

Standard opening pressure:

74 – 103 kPa

(0.75 – 1.05 kgf/cm², 10.7 – 14.9 psi)

Minimum opening pressure:

59 kPa (0.6 kgf/cm², 8.5 psi)

HINT: Use the tester's maximum reading as the opening pressure.

If the opening pressure is less than minimum, replace the radiator cap.

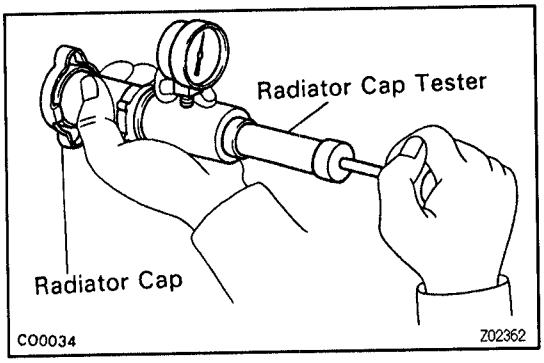

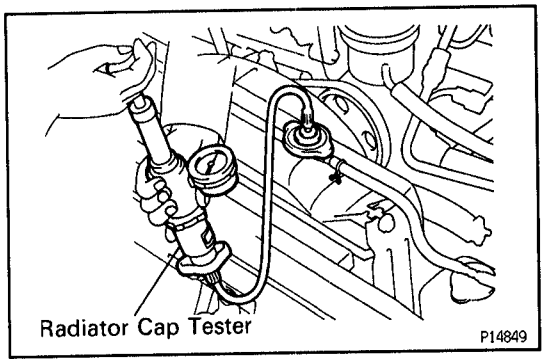

3. **INSPECT COOLING SYSTEM FOR LEAKS**

(a) Fill the radiator with coolant and attach a radiator cap tester.

(b) Warm up the engine.

(c) Pump it to 118 kPa (1.2 kgf/cm², 17.1 psi), and check that the pressure does not drop.

If the pressure drops, check the hoses, radiator or water pump for leaks. If no external leaks are found, check the heater core, cylinder block and head.

4. **REINSTALL RADIATOR CAP**

COMPONENTS FOR REMOVAL AND INSTALLATION

EG1J6–0A

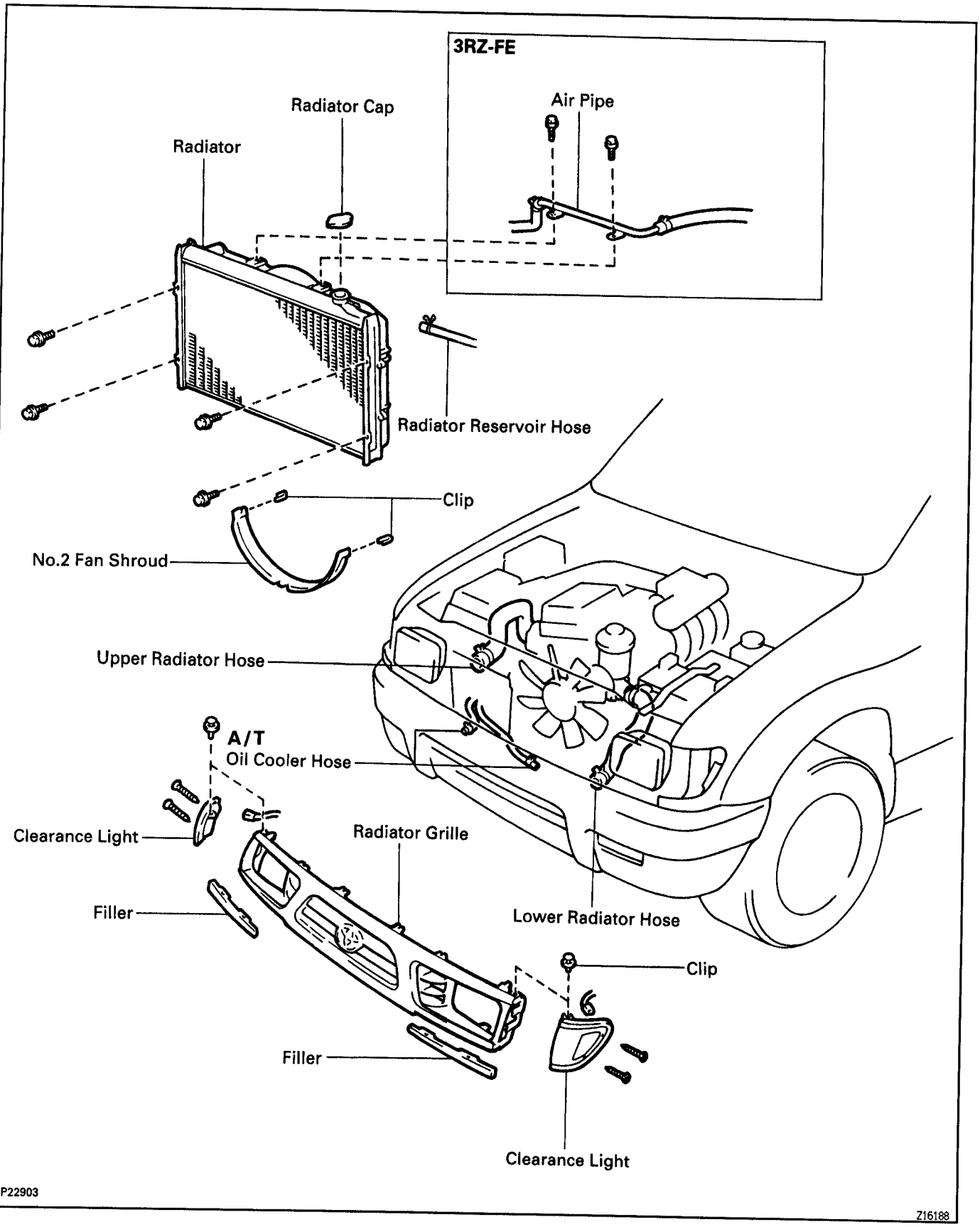

EG5P4–02

RADIATOR REMOVAL

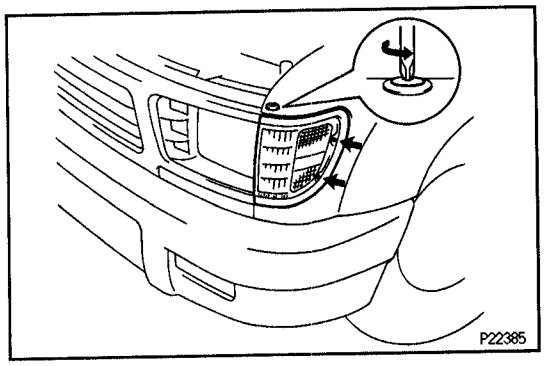

1. **DRAIN ENGINE COOLANT**
2. **REMOVE RADIATOR GRILLE**

(a) Remove the 4 screws, 2 clips and clearance lights.

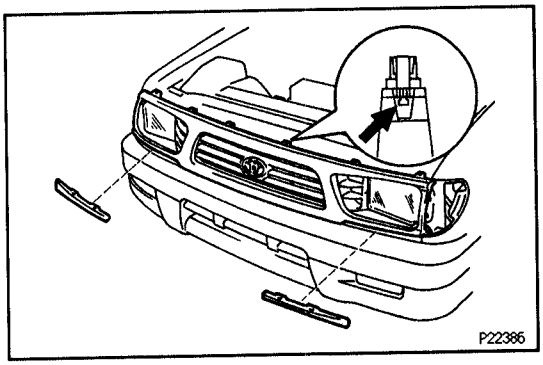

(b) Remove the 2 filler.
(c) Remove the 11 clips and radiator grille.

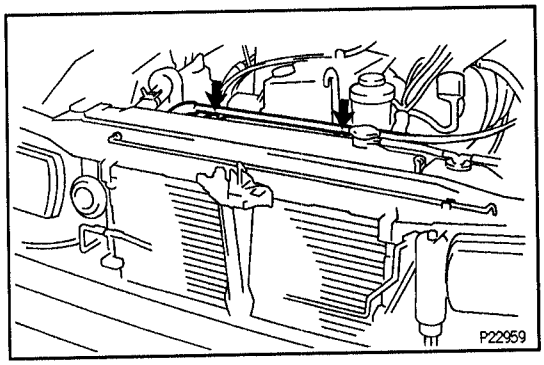

3. **3RZ–FE:**
   DISCONNECT AIR PIPE
   Remove the 2 bolts and disconnect the air pipe.

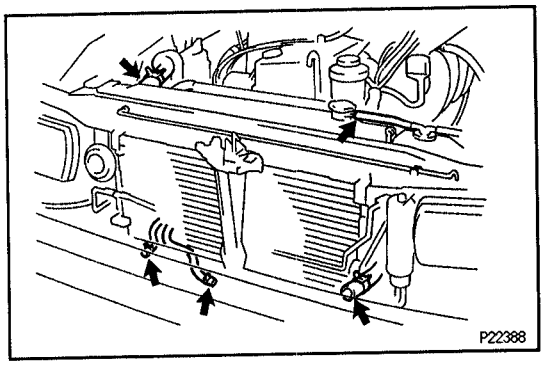

4. **DISCONNECT UPPER RADIATOR HOSE**
5. **DISCONNECT RADIATOR RESERVOIR HOSE**
6. **DISCONNECT LOWER RADIATOR HOSE**
7. **REMOVE NO.2 FAN SHROUD**
8. **A/T:**
   DISCONNECT OIL COOLER HOSES

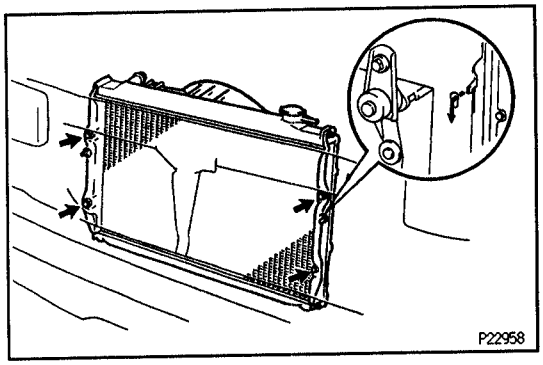

9. **REMOVE RADIATOR**
   Remove the 4 bolts and radiator.
   Torque: 12.5 N·m (125 kgf·cm, 9 ft·lbf)
   INSTALLATION HINT: Insert the tabs of the radiator support through the radiator service holes.

COMPONENTS FOR DISASSEMBLY AND ASSEMBLY

EG1J8-0E

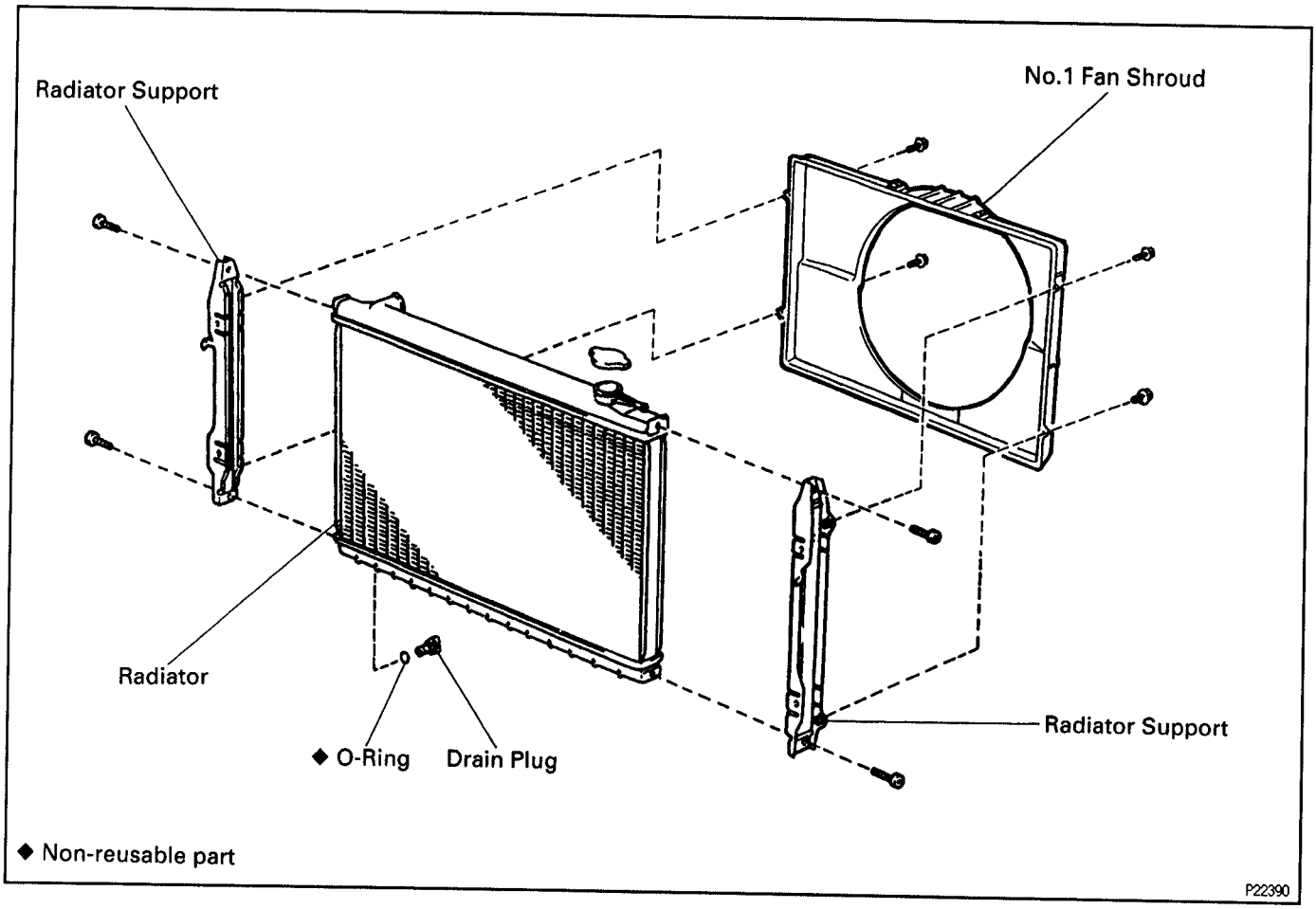

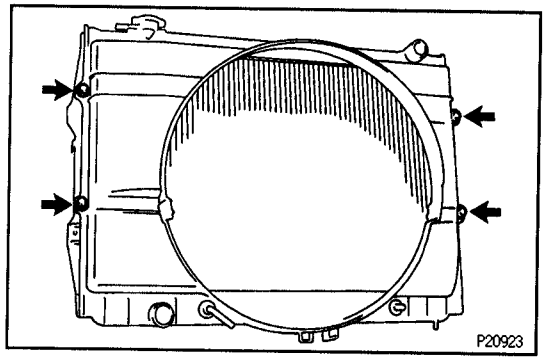

RADIATOR DISASSEMBLY

EG567-04

1. **REMOVE NO.1 FAN SHROUD**
   Remove the 4 bolts and fan shroud.

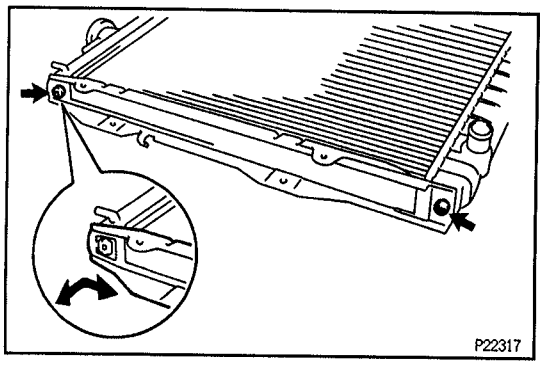

2. **REMOVE RADIATOR SUPPORTS**
   Remove the 4 screws and 2 radiator supports.
   INSTALLATION HINT: Insert the tabs the radiator upper tank through the radiator support holes.
   Torque: 5.5 N·m (55 kgf·cm, 49 in.·lbf)

EG05G–01

RADIATOR ASSEMBLY

Assembly is in the reverse order of disassembly.

EG05H–01

RADIATOR INSTALLATION

Installation is in the reverse order of removal.

EG

SERVICE SPECIFICATIONS

EG07L–1E

SERVICE DATA

Thermostat	Valve opening temperature		80 – 84°C (176 – 183°F)
	Valve lift at 95°C (203°F)		8 mm (0.31 in.) or more
Radiator cap	Relief valve opening pressure	STD	74 – 103 kPa (0.75 – 1.05 kgf/cm², 10.7 – 14.9 psi)

EG07M–1J

TORQUE SPECIFICATIONS

Part tightened		N·m	kgf·cm	ft·lbf
Cylinder block x Drain plug		24.5	250	18
Water pump pulley x Water pump		21	210	16
Water pump x Cylinder block	14 mm head bolt	24.5	250	18
	12 mm head bolt	8.9	90	78 in.·lbf
Fan x Fluid coupling		5.5	55	49 in.·lbf
Water inlet x Water inlet housing		20	200	15
Radiator support x Radiator		5.5	55	49 in.·lbf
Radiator x Body		12.5	125	9

LUBRICATION SYSTEM

PREPARATION

SST (SPECIAL SERVICE TOOLS)

EG07P–0N

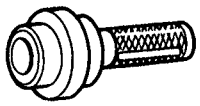	09223–50010	Crankshaft Front oil Seal Replacer	
	09228–07501	Oil Filter Wrench	
	09816–30010	Oil Pressure Switch Socket	

EG

RECOMMENDED TOOLS

EG07Q–0F

	09200–00010	Engine Adjust Kit .	

EQUIPMENT

EG07R–0J

Oil pressure gauge	
Precision straight edge	Oil pump
Torque wrench	

LUBRICANT

EG1CU–0E

Item	Capacity	Classification
Engine oil		API grade SH, Energy–Conserving II multigrade engine oil or ILSAC multigrade engine oil and recommended viscosity oil, with SAE 5W–30 being preferred engine oil
2WD		
Dry fill	6.2 liters (6.6 US qts, 5.5 Imp. qts)	
Drain and refill		
w/ Oil filter change	5.5 liters (5.8 US qts, 4.8 Imp. qts)	
w/o Oil filter change	4.8 liters (5.0 US qts, 4.2 Imp. qts)	
4WD		
Dry fill	5.8 liters (6.1 US qts, 5.1 Imp. qts)	
Drain and refill		
w/ Oil filter change	5.4 liters (5.7 US qts, 4.8 Imp. qts)	
w/o Oil filter change	4.7 liters (5.0 US qts, 4.1 Imp. qts)	

EG07T–0A

SSM (SPECIAL SERVICE MATERIALS)

08833–00080	Adhesive 1344, THREE BOND 1344, LOCTITE 242 or equivalent	Oil pressure switch

OIL PRESSURE CHECK

EG06J–01

1. CHECK ENGINE OIL QUALITY

Check the oil for deterioration, entry of water, discoloring or thinning.

If the quality is visibly poor, replace the oil.

2. CHECK ENGINE OIL LEVEL

The oil level should be between the "L" and "F" marks on the dipstick.

If low, check for leakage and add oil up to "F" mark.

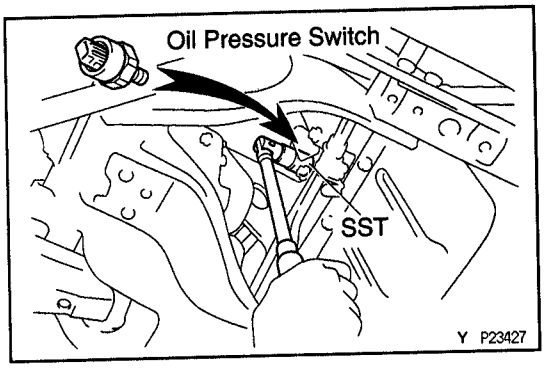

3. REMOVE ENGINE UNDER COVER

4. REMOVE OIL PRESSURE SWITCH

Using SST, remove the oil pressure switch.

SST 09816–30010

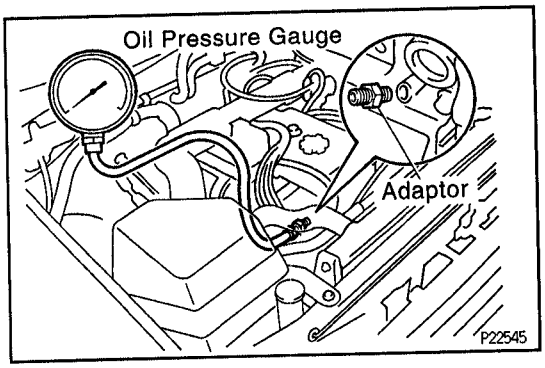

5. INSTALL OIL PRESSURE GAUGE

Install an oil pressure gauge to an adaptor.

6. WARM UP ENGINE

Allow the engine to warm up to normal operating temperature.

7. INSPECT OIL PRESSURE

Oil pressure:

At idle

29 kPa (0.3 kgf/cm², 4.3 psi) or more

At 3,000 rpm

245 – 490 kPa (2.5 – 5.0 kgf/cm², 36 – 71 psi)

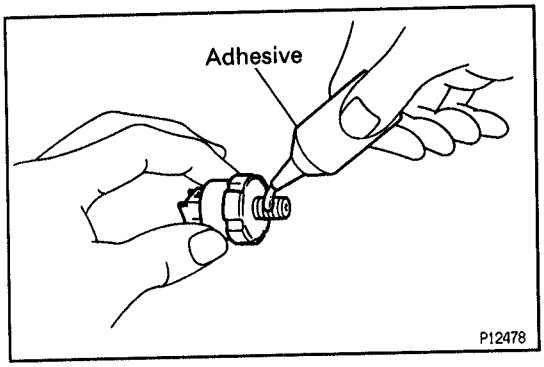

8. REMOVE OIL PRESSURE GAUGE

9. REINSTALL OIL PRESSURE SWITCH

(a) Apply adhesive to 2 or 3 threads of the oil pressure switch.

Adhesive:

Part No. 08833–00080, THREE BOND 1344, LOCTITE 242 or equivalent

(b) Using SST, install the oil pressure switch.

SST 09816–30010

10. REINSTALL ENGINE UNDER COVER

11. START ENGINE AND CHECK FOR LEAKS

OIL AND FILTER REPLACEMENT

CAUTION: EGWPF–02

- **Prolonged and repeated contact with mineral oil will result in the removal of natural fats from the skin, leading to dryness, irritation and dermatitis. In addition, used engine oil contains potentially harmful contaminants which may cause skin cancer.**
- **Care should be taken, therefore, when changing engine, oil to minimize the frequency and length of time your skin is exposed to used engine oil. Protective clothing and gloves that cannot be penetrated by oil should be worn. The skin should be thoroughly washed with soap and water, or use water–less hand cleaner, to remove any used engine oil. Do not use gasoline, thinners, or solvents.**
- **In order to preserve the environment, used oil and used oil filters must be disposed of only at designated disposal sites.**

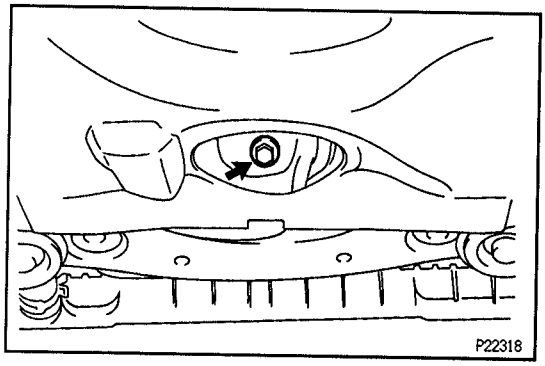

1. DRAIN ENGINE OIL

(a) Remove the oil filler cap.

(b) Remove the oil drain plug, and drain the oil into a container.

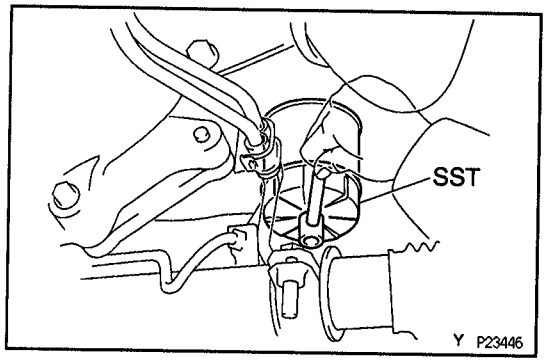

2. REPLACE OIL FILTER

(a) Using SST, remove the oil filter.
SST 09228–07501

(b) Check and clean the oil filter installation surface.

(c) Apply clean engine oil to the gasket of a new oil filter.

(d) Lightly screw the oil filter into place, and tighten it until the gasket contacts the seat.

(e) Using SST, tighten it an additional 3/4 turn.
SST 09228–07501

3. REFILL WITH ENGINE OIL

(a) Clean and install the oil drain plug with a new gasket.
Torque: 37 N·m (375 kgf·cm, 27 ft·lbf)

(b) Fill with fresh engine oil.
Oil grade:

API grade SH Energy – Conserving II multigrade engine oil or ILSAC multigrade engine oil.
Recommended viscosity is as shown in the illustration, with SAE 5W–30 being the preferred engine oil.

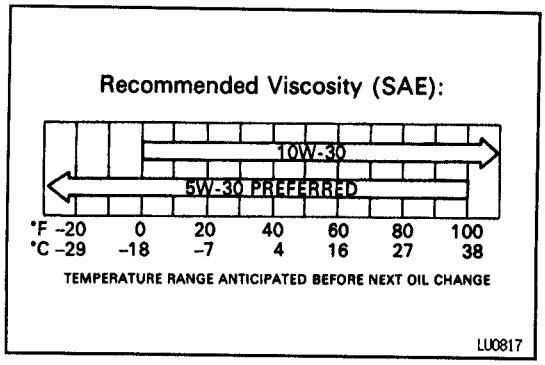

Oil capacity

2WD:

Dry fill

6.2 liters (6.6 US qts, 5.5 Imp. qts)

Drain and refill

w/ Oil filter change

5.5 liters (5.8 US qts, 4.8 Imp. qts)

w/o Oil filter change

4.8 liters (5.0 US qts, 4.2 Imp. qts)

4WD:

Dry fill

5.8 liters (6.1 US qts, 5.1 Imp. qts)

Drain and refill

w/ Oil filter change

5.4 liters (5.7 US qts, 4.8 Imp. qts)

w/o Oil filter change

4.7 liters (5.0 US qts, 4.1 Imp. qts)

(c) Reinstall the oil filler cap.

4. START ENGINE AND CHECK FOR LEAKS

5. RECHECK ENGINE OIL LEVEL

OIL PUMP

COMPONENTS FOR REMOVAL AND INSTALLATION

EG5P6–02

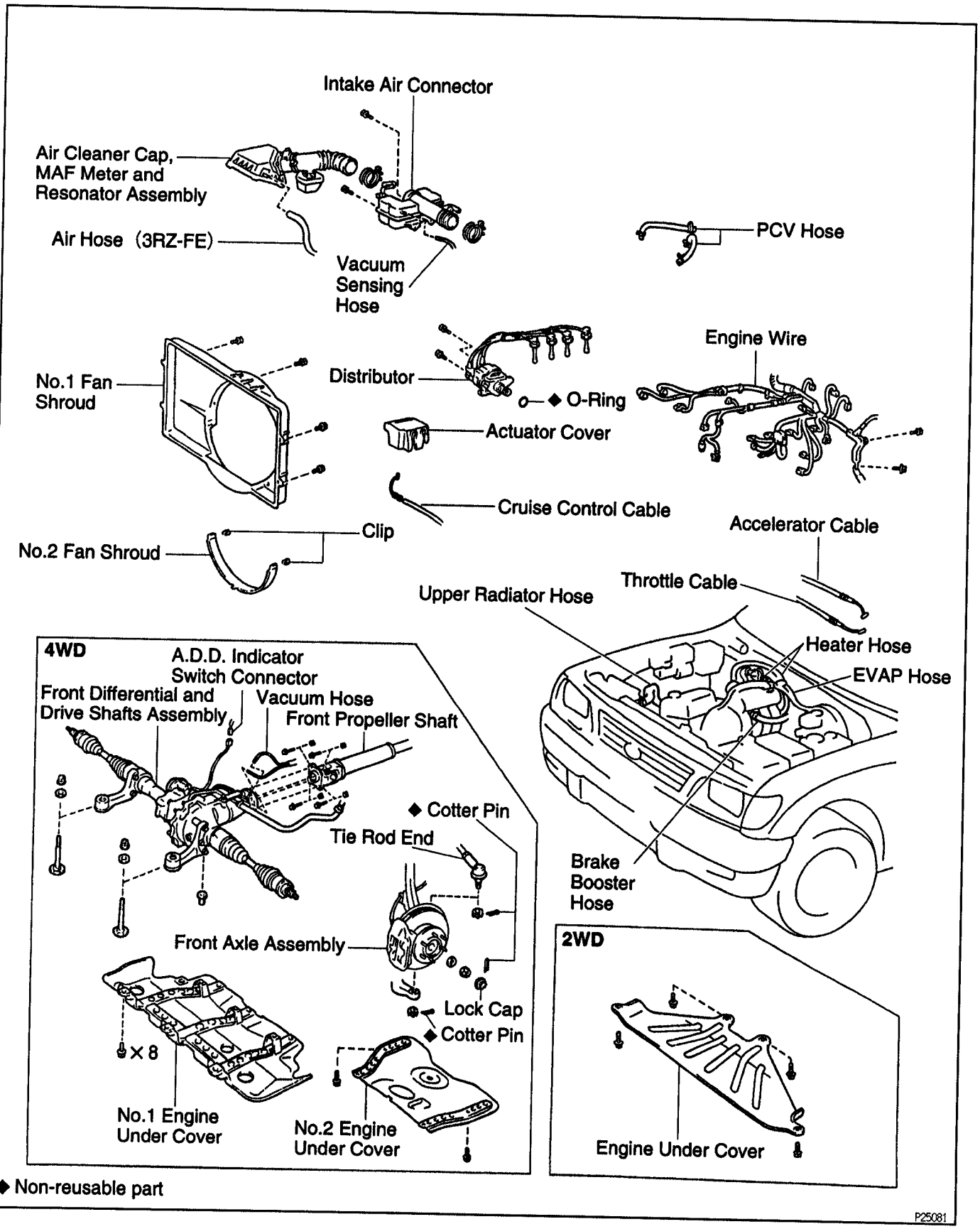

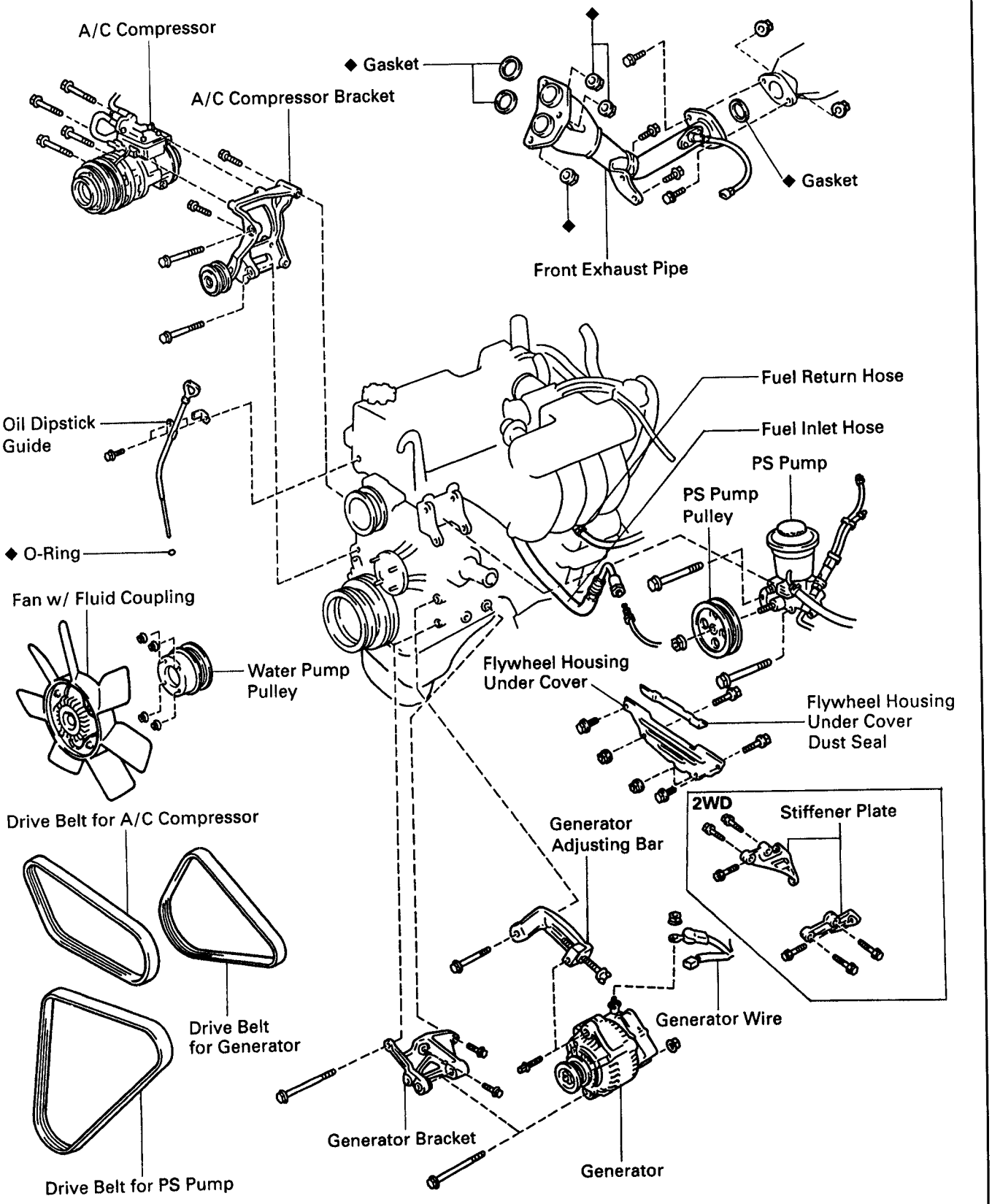

◆ Non-reusable part

P22485

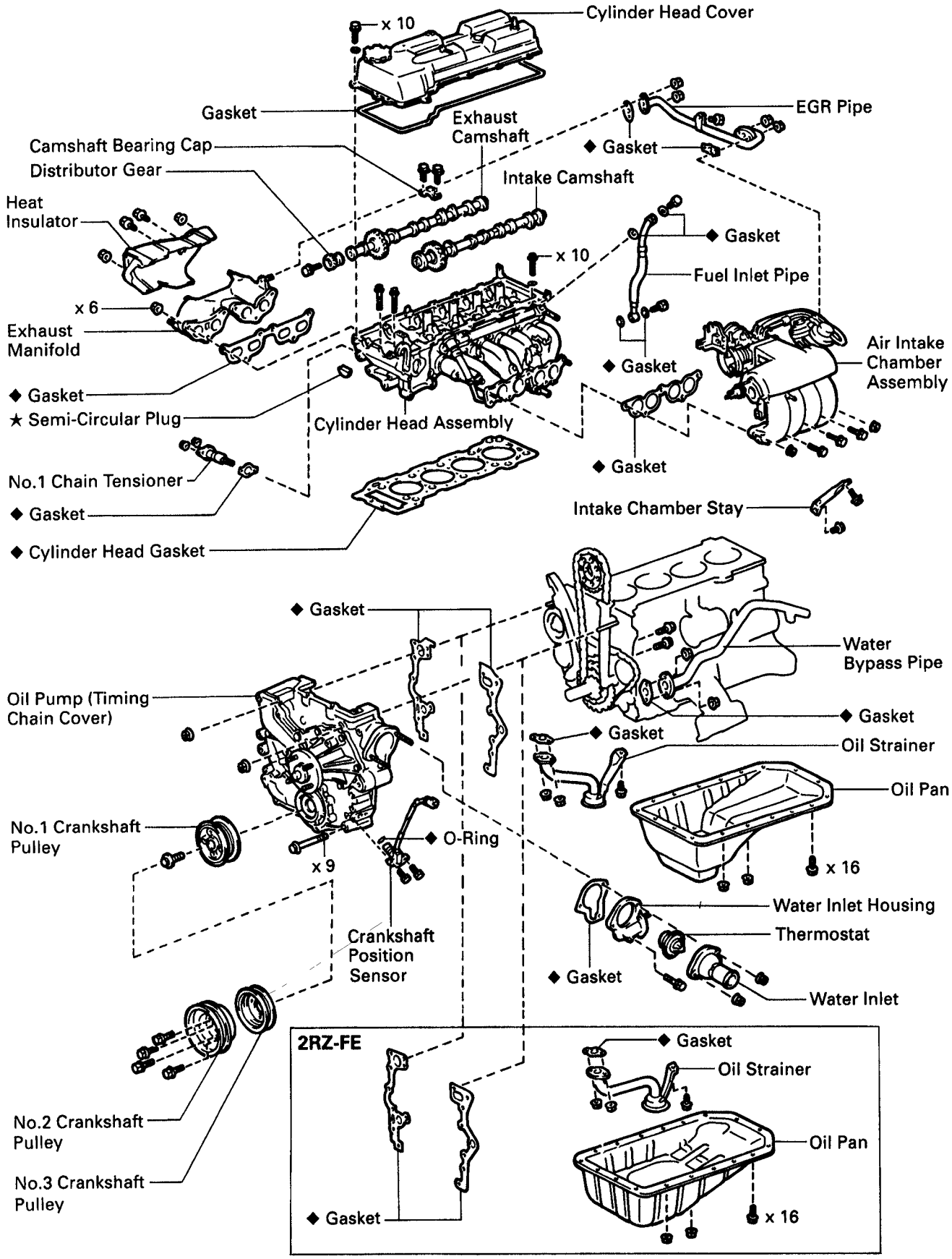

◆ Non-reusable part
★ Precoated part

P22899

EG5CU–08

OIL PUMP REMOVAL

1. **REMOVE CYLINDER HEAD ASSEMBLY**
   (See cylinder head removal in Engine Mechanical)
2. **REMOVE WATER INLET AND WATER INLET HOUSING**

(a) Remove the 2 nut, water inlet and thermostat.
(b) Remove the bolt and water inlet housing and gasket.

3. **REMOVE TIMING CHAIN COVER**
   (See timing chain removal in Engine Mechanical)

EG1JG–07

COMPONENTS FOR DISASSEMBLY AND ASSEMBLY

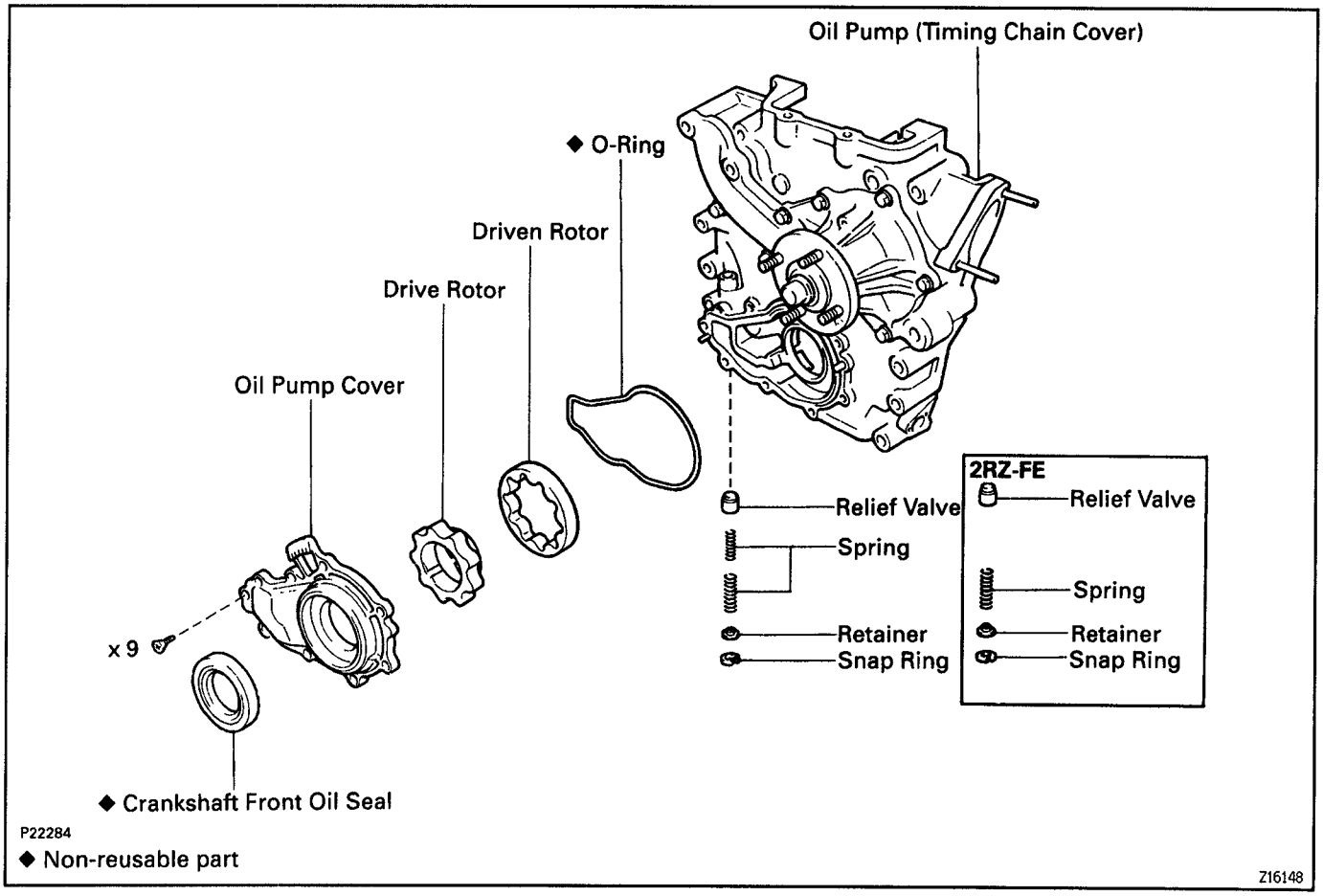

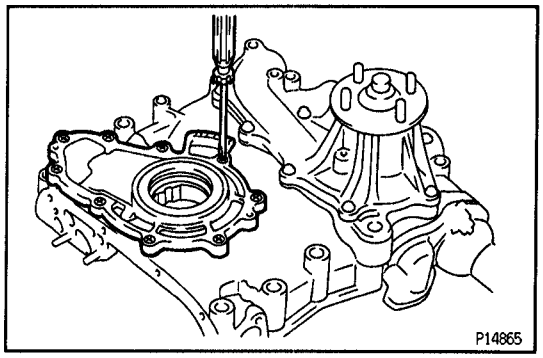

EG5P7–02

OIL PUMP DISASSEMBLY

1. **REMOVE DRIVE AND DRIVEN ROTORS**
   Remove the 9 screws, pump cover, drive rotor, driven rotor and O–ring.
2. **REMOVE RELIEF VALVE**

(a) Using snap ring pliers, remove the snap ring.
(b) Remove the retainer, spring(s) and relief valve.

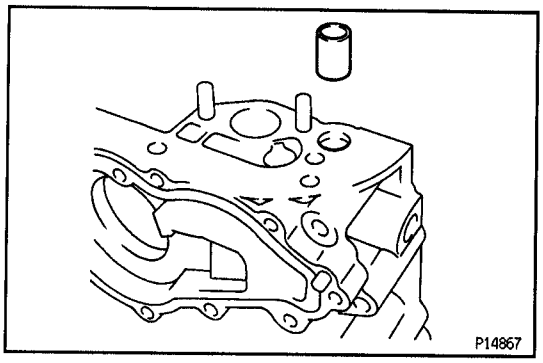

OIL PUMP INSPECTION

1. **INSPECT RELIEF VALVE**

Coat the valve with engine oil and check that it falls smoothly into the valve hole by its own weight.
If it does not, replace the relief valve. If necessary, replace the oil pump assembly.

2. **INSPECT DRIVE AND DRIVEN ROTORS**

A. Inspect rotor body clearance

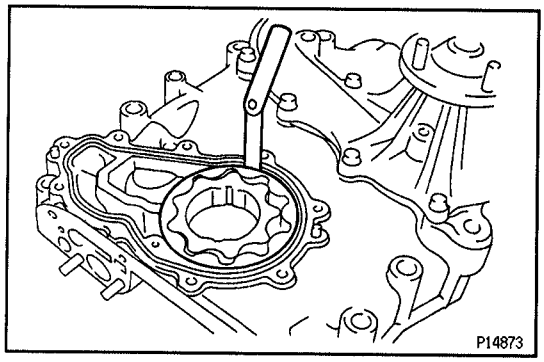

Using a thickness gauge, measure the clearance between the driven rotor and body.

Standard body clearance:

0.100 – 0.175 mm (0.0039 – 0.0069 in.)

Maximum body clearance:

0.30 mm (0.0118 in.)

If the body clearance is greater than maximum, replace the rotors as a set. If necessary, replace the oil pump assembly.

B. Inspect rotor side clearance

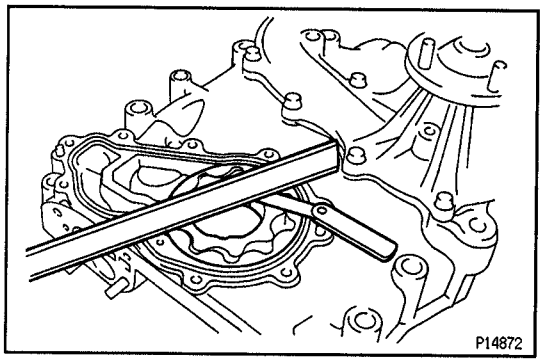

Using a thickness gauge and precision straight edge, measure the clearance between the rotors and precision straight edge.

Standard side clearance:

0.030 – 0.090 mm (0.0012 – 0.0035 in.)

Maximum side clearance:

0.15 mm (0.0059 in.)

If the side clearance is greater than maximum, replace the rotors as a set. If necessary, replace the oil pump assembly.

C. Inspect rotor tip clearance

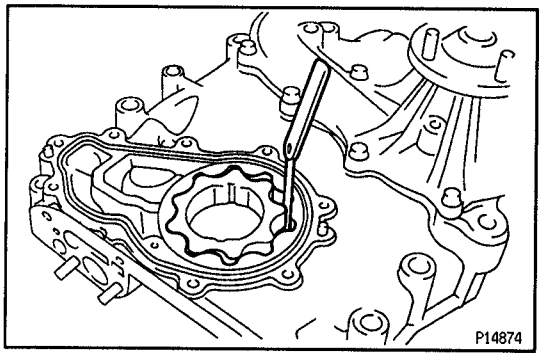

Using a thickness gauge, measure the clearance between the drive and driven rotor tips.

Standard tip clearance:

0.110 – 0.240 mm (0.0043 – 0.0094 in.)

Maximum tip clearance:

0.25 mm (0.0098 in.)

If the tip clearance is greater than maximum, replace the rotors as a set.

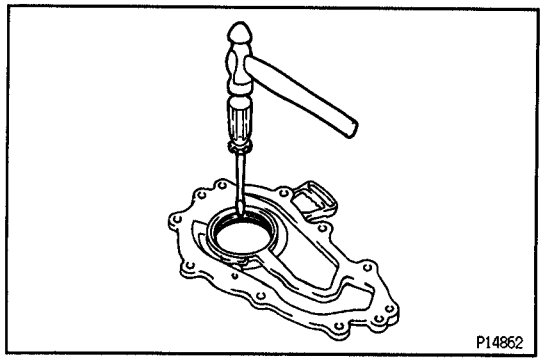

CRANKSHAFT FRONT OIL SEAL REPLACEMENT

HINT: There are 2 methods (A and B) to replace the oil seal which are as follows:

1. **REPLACE CRANKSHAFT FRONT OIL SEAL**

A. If oil pump is removed from cylinder block:

(a) Using a screwdriver and a hammer, tap out the oil seal.

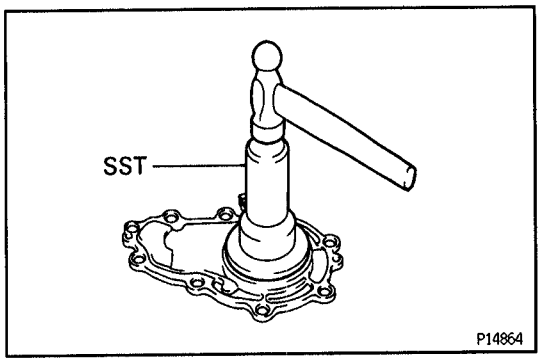

(b) Using SST and a hammer, tap in a new oil seal until its surface is flush with the oil pump case edge.
SST 09223–50010
(c) Apply MP grease to the oil seal lip.

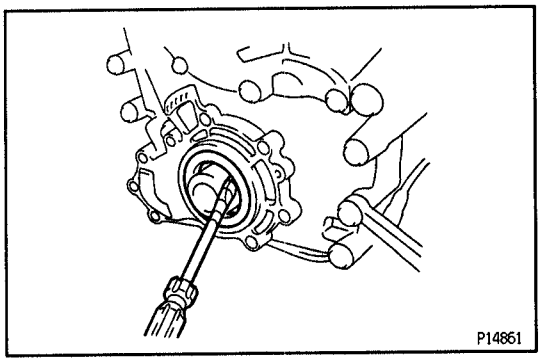

B. If oil pump is installed to cylinder block:
(a) Using a screwdriver, pry out the oil seal.
NOTICE: Be careful not to damage the crankshaft. Tape the screwdriver tip.

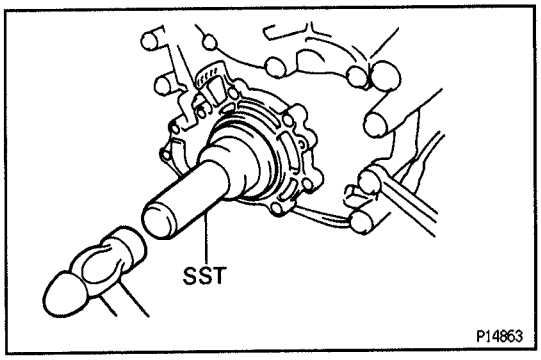

(b) Apply MP grease to a new oil seal lip.
(c) Using SST and a hammer, tap in the oil seal until its surface is flush with the oil pump case edge.
SST 09223–50010

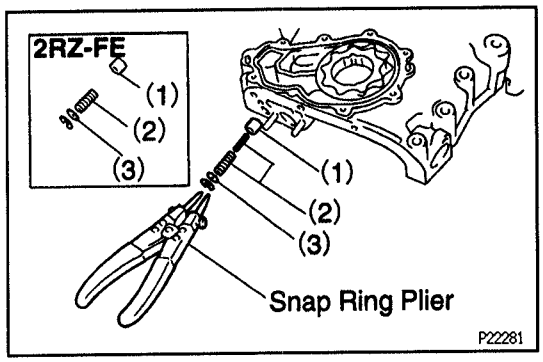

EGSCW–03

OIL PUMP ASSEMBLY

1. INSTALL RELIEF VALVE

(a) Install these parts:
(1) Relief valve
(2) Spring(s)
(3) Retainer
(b) Using snap ring pliers, install the snap ring.

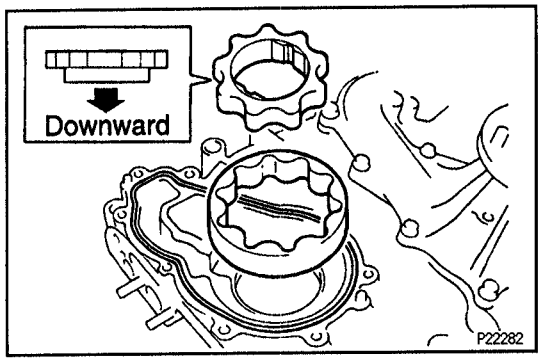

2. INSTALL DRIVE AND DRIVEN ROTORS

(a) Place the drive and driven rotors into the pump body.

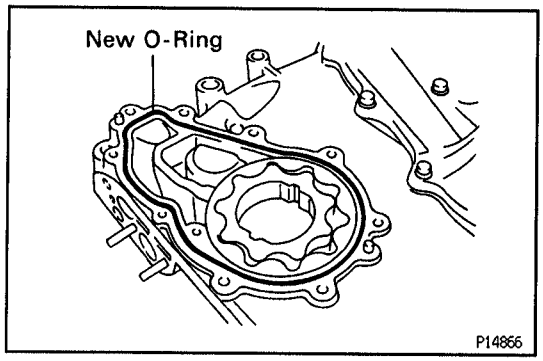

(b) Place a new O–ring to the pump body.
(c) Install the pump cover with the 9 screws.

OIL PUMP INSTALLATION

EG5CX–03

1. **INSTALL TIMING CHAIN COVER (See timing chain installation in Engine Mechanical)**
2. **INSTALL WATER INLET AND WATER INLET HOUSING**
3. **INSTALL CYLINDER HEAD ASSEMBLY (See cylinder head installation in Engine Mechanical)**

SERVICE SPECIFICATIONS

SERVICE DATA

EG00H–0H

Oil pressure	Normal operating temperature	at idle speed	29 kPa (0.3 kgf/cm², 4.3 psi) or more
		at 3,000 rpm	245 – 490 kPa (2.5 – 5.0 kgf/cm², 36 – 71 psi)
Oil pump	Body clearance	STD	0.100 – 0.175 mm (0.0039 – 0.0069 in.)
		Maximum	0.30 mm (0.0118 in.)
	Tip clearance	STD	0.110 – 0.240 mm (0.0043 – 0.0094 in.)
		Maximum	0.25 mm (0.0098 in.)
	Side clearance	STD	0.030 – 0.090 mm (0.0012 – 0.0035 in.)
		Maximum	0.15 mm (0.0059 in.)

TORQUE SPECIFICATIONS

EG0NY–0E

Part tightened	N·m	kgf·cm	ft·lbf
Oil pan x Drain plug	37	375	27

2RZ-FE, 3RZ-FE ENGINE TROUBLESHOOTING

EG

HOW TO PROCEED WITH TROUBLESHOOTING ..... EG−186
CUSTOMER PROBLEM ANALYSIS CHECK SHEET ..... EG−187
DIAGNOSIS SYSTEM ..... EG−188
DTC CHART ..... EG−192
FAIL-SAFE CHART ..... EG−196
CHECK FOR INTERMITTENT PROBLEMS ..... EG−196
BASIC INSPECTION ..... EG−197
PARTS LOCATION ..... EG−200
STANDARD VALUE OF ECM TERMINALS .. EG−201
ENGINE OPERATING CONDITION ..... EG−205
MATRIX CHART OF PROBLEM SYMPTOMS ..... EG−207
CIRCUIT INSPECTION
- DTC P0100
  - Mass Air Flow Circuit Malfunction ... EG−208
- DTC P0101
  - Mass Air Flow Circuit Range/Performance Problem ..... EG−211
- DTC P0110
  - Intake Air Temp. Circuit Malfunction ..... EG−212
- DTC P0115
  - Engine Coolant Temp. Circuit Malfunction ..... EG−215
- DTC P0116
  - Engine Coolant Temp. Circuit Range/Performance Problem ..... EG−218
- DTC P0120
  - Throttle/Pedal Position Sensor/ Switch "A" Circuit Malfunction ..... EG−219
- DTC P0121
  - Throttle/Pedal Position Sensor/Switch "A" Circuit Range/Performance Problem ..... EG−222
- DTC P0125
  - Insufficient Coolant Temp. for Closed Loop Fuel Control ..... EG−223
- DTC P0130
  - Heated Oxygen Sensor Circuit Malfunction (Bank 1 Sensor 1) ..... EG−225
- DTC P0133
  - Heated Oxygen Sensor Circuit Slow Response (Bank 1 Sensor 1) ..... EG−227
- DTC P0135, P0141
  - Heated Oxygen Sensor Heater Circuit Malfunction (Bank 1 Sensor 1, Bank 1 Sensor 2) ..... EG−227
- DTC P0136
  - Heated Oxygen Sensor Circuit Malfunction (Bank 1 Sensor 2) ..... EG−228
- DTC P0171, P0172
  - System too Lean (Fuel Trim) System too Rich (Fuel Trim) ..... EG−230
- DTC P0300
  - Random/Multiple Cylinder Misfire Detected ..... EG−232
- DTC P0301, P0302, P0303, P0304
  - Misfire Detected ..... EG−232
- DTC P0325
  - Knock Sensor 1 Circuit Malfunction ..... EG−236
- DTC P0335
  - Crankshaft Position Sensor "A" Circuit Malfunction ..... EG−238
- DTC P0336
  - Crankshaft Position Sensor "A" Circuit Range/Performance ..... EG−240
- DTC P0340
  - Camshaft Position Sensor Circuit Malfunction ..... EG−241
- DTC P0401
  - Exhaust Gas Recirculation Flow Insufficient Detected ..... EG−242
- DTC P0402
  - Exhaust Gas Recirculation Flow Excessive Detected ..... EG−250
- DTC P0420
  - Catalyst System Efficiency Below Threshold ..... EG−253
- DTC P0440
  - Evaporative Emission Control System Malfunction (Only for 4WD models) ..... EG−256

DTC P0441
Evaporative Emission Control System
Incorrect Purge Flow
(For 2WD models) ..... EG−262
DTC P0441
Evaporative Emission Control System
Incorrect Purge Flow
(For 4WD models) ..... EG−265
DTC P0446
Evaporative Emission Control System
Vent Control Malfunction
(Only for 4WD models) ..... EG−265
DTC P0450
Evaporative Emission Control System
Pressure Sensor Malfunction
(Only for 4WD models) ..... EG−274
DTC P0500
Vehicle Speed Sensor Malfunction ... EG−276
DTC P0505
Idle Control System Malfunction ..... EG−278
DTC P0510
Closed Throttle Position Switch
Malfunction ..... EG−280
DTC P1300
Igniter Circuit Malfunction ..... EG−282
DTC P1335
Crankshaft Position Sensor Circuit
Malfunction (during engine running) .. EG−286
DTC P1500
Starter Signal Circuit Malfunction .... EG−286
DTC P1600
ECM BATT Malfunction ..... EG−287
DTC P1780
Park/Neutral Position Switch
Malfunction ..... EG−289
ECM Power Source Circuit ..... EG−291
Fuel Pump Control Circuit ..... EG−294

HOW TO PROCEED WITH TROUBLESHOOTING

Troubleshoot in accordance with the procedure on the following pages.

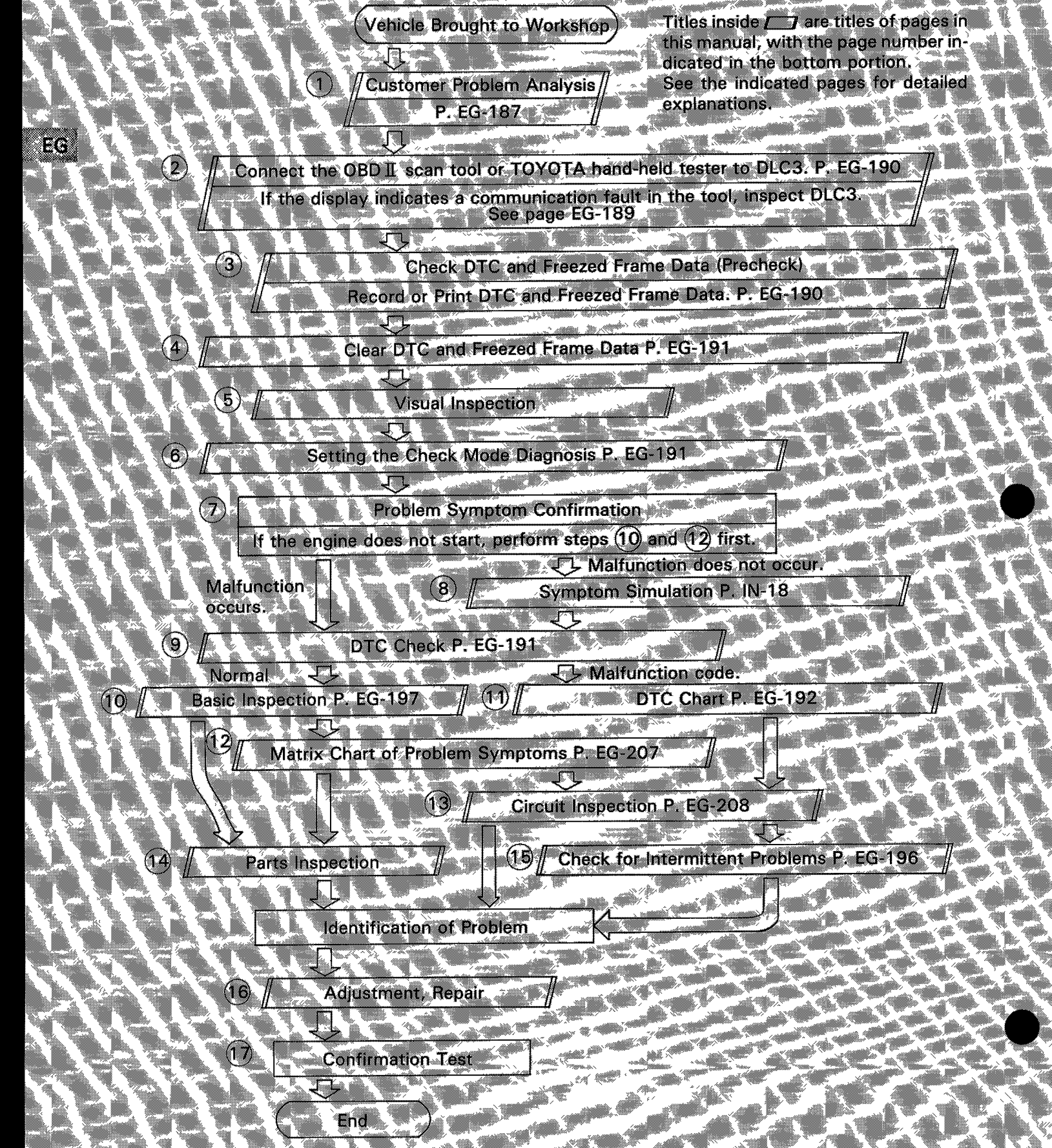

Titles inside [ ] are titles of pages in this manual, with the page number indicated in the bottom portion. See the indicated pages for detailed explanations.

EG

CUSTOMER PROBLEM ANALYSIS CHECK SHEET

ENGINE CONTROL System Check Sheet

Inspector's Name

Customer's name		**Model and model year**	
Driver's name		**Frame no.**	
Data vehicle brought in		**Engine model**	
License no.		**Odometer reading**	km miles

Problem Symptoms	☐ **Engine does not Start**	☐ Engine does not crank ☐ No intial combustion ☐ No complete combustion
	☐ **Difficult to Start**	☐ Engine cranks slowly ☐ Other_____
	☐ **Poor Idling**	☐ Incorrect first idle ☐ Idling rpm is abnormal [☐ High ☐ Low (rpm)] ☐ Rough idling ☐ Other_____
	☐ **Poor Driveability**	☐ Hesitation ☐ Back fire ☐ Muffler explosion (after-fire) ☐ Surging ☐ Knocking ☐ Other_____
	☐ **Engine Stall**	☐ Soon after starting ☐ After accelerator pedal depressed ☐ After accelerator pedal released ☐ During A/C operation ☐ Shifting from N to D ☐ Other_____
	☐ **Others**	

Datas Problem Occurred		
Problem Frequency		☐ Constant ☐ Sometimes (times per day/month) ☐ Once only ☐ Other_____
Conditions When Problem Occurs	**Weather**	☐ Fine ☐ Cloudy ☐ Rainy ☐ Snowy ☐ Various/Other_____
	Outdoor Temperature	☐ Hot ☐ Warm ☐ Cool ☐ Cold (approx.____°F /____°C)
	Place	☐ Highway ☐ Suburbs ☐ Inner City ☐ Uphill ☐ Downhill ☐ Rough road ☐ Other_____
	Engine Temp.	☐ Cold ☐ Warming up ☐ After warming up ☐ Any temp. ☐ Other_____
	Engine Operation	☐ Starting ☐ Just after starting [min.] ☐ Idling ☐ Racing ☐ Driving ☐ Constant speed ☐ Acceleration ☐ Deceleration ☐ A/C switch ON/OFF ☐ Other_____

Condition of Malfunction Indicator Lamp		☐ Remains on ☐ Sometimes lights up ☐ Does not light up
Diagnostic Trouble Code Inspection	**Normal Mode (Precheck)**	☐ Normal ☐ Malfunction code(s) [code] ☐ Freezed frame data [ ]
	Check Mode	☐ Normal ☐ Malfunction code(s) [code] ☐ Freezed frame data [ ]

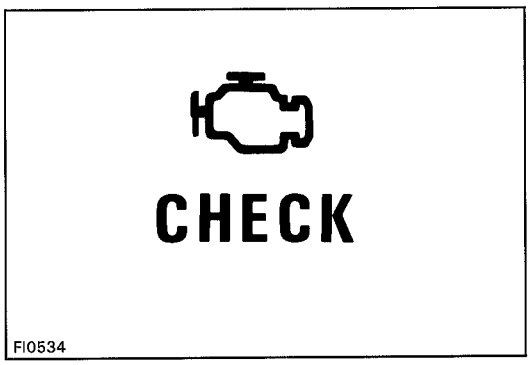

EG

DIAGNOSIS SYSTEM

DESCRIPTION

When troubleshooting OBD II vehicles, the only difference from the usual troubleshooting procedure is that you connect to the vehicle the OBD II scan tool complying with SAE J1978 or TOYOTA hand-held tester, and read off various data output from the vehicle's ECM.

OBD II regulations require that the vehicle's on-board computer lights up the Malfunction Indicator Lamp (MIL) on the instrument panel when the computer detects a malfunction in the computer itself or in drive system components which affect vehicle emissions. In addition to the MIL lighting up when a malfunction is detected, the applicable DTC prescribed by SAE J2012 are recorded in the ECM memory. (See page EG-192)

If the malfunction does not reoccur in 3 trips, the MIL goes off but the DTC remain recorded in the ECM memory.

To check the DTC, connect the OBD II scan tool or TOYOTA hand-held tester to Data Link Connector 3 (DLC3) on the vehicle. The OBD II scan tool or TOYOTA hand-held tester also enables you to erase the DTC and check freezed frame data and various forms of engine data. (For operating instructions, see the OBD II scan tool's instruction book.)

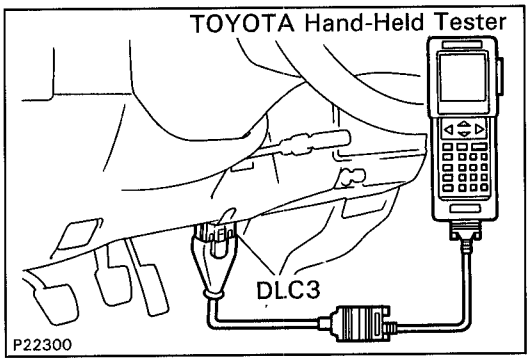

DTC include SAE controlled codes and Manufacturer controlled codes.
SAE controlled codes must be set as prescribed by the SAE, while Manufacturer controlled codes can be set freely by the manufacturer within the prescribed limits.
(See DTC chart on page EG-192)

The diagnosis system operates in normal mode during normal vehicle use. It also has a check mode for technicians to simulate malfunction symptoms and troubleshoot. Most DTC use 2 trip detection logic* to prevent erroneous detection and ensure thorough malfunction detection. By switching the ECM to check mode when troubleshooting, the technician can cause the MIL to light up for a malfunction that is only detected once or momentarily. (TOYOTA hand-held tester only)
(See page EG-190)

*2 trip detection logic
When a logic malfunction is first detected, the malfunction is temporarily stored in the ECM memory. If the same malfunction is detected again during the second drive test, this second detection causes the MIL to light up.
The 2 trip repeats the same mode a 2nd time. (However, the IG switch must be turned OFF between the 1st trip and 2nd trip).

Freeze frame data:

Freeze frame data records the engine condition when a misfire (DTC P0300 ~ P0304) or fuel trim malfunction (DTC P0171, P0172), or other malfunction (first malfunction only), is detected.

Because freeze frame data records the engine conditions (fuel system, calculator load, engine coolant temperature, fuel trim, engine speed, vehicle speed, etc.) when the malfunction is detected, when troubleshooting it is useful for determining whether the vehicle was running or stopped, the engine warmed up or not, the air-fuel ratio lean or rich, etc. at the time of the malfunction.

Priorities for Troubleshooting

If troubleshooting priorities for multiple diagnostic codes are given in the applicable diagnostic chart, these should be followed.

If no instructions are given troubleshoot DTC according to the following priorities.

① DTC other than fuel trim malfunction (DTC P0171, P0172), EGR (DTC P0401, P0402), and misfire (DTC P0300 ~ P0304).

② Fuel trim malfunction (DTC P0171, P0172) and EGR (DTC P0401, P0402).

③ Misfire (DTC P0300 ~ P0304).

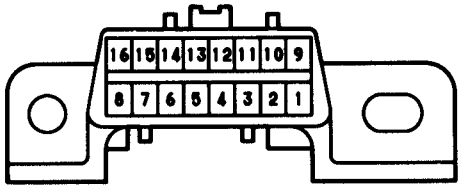

DLC3

N09214

DATA LINK CONNECTOR 3 (DLC3) INSPECTION

The vehicle's ECM uses V.P.W. (Variable Pulse Width)for communication to comply with SAE J1850. The terminal arrangement of DLC3 complies with SAE J1962 and matches the V.P.W. format.

Terminal No.	Connection	Voltage or Resistance	Condition
2	Bus ⊕ Line	Pulse generation	During transmission
4	Chassis Ground	↔ Body Ground 1 Ω or less	Always
5	Signal Ground	↔ Body Ground 1 Ω or less	Always
16	Battery Positive	↔ Body Ground 9 ~ 14 V	Always

HINT: If your display shows "UNABLE TO CONNECT TO VEHICLE" when you have connected the cable of the OBD II scan tool or TOYOTA hand-held tester to DLC3, turned the ignition switch ON and operated the scan tool, there is a problem on the vehicle side or tool side.

(1) If communication is normal when the tool is connected to another vehicle, inspect DLC3 on the original vehicle.

(2) If communication is still not possible when the tool is connected to another vehicle, the problem is probably in the tool itself, so consult the Service Department listed in the tool's instruction manual.

w/o Tachometer

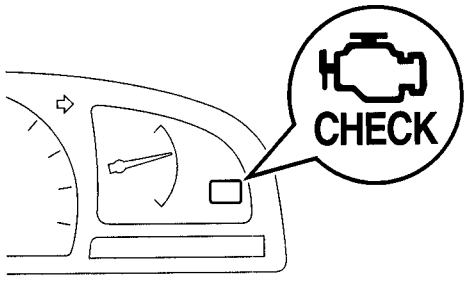

w/ Tachometer

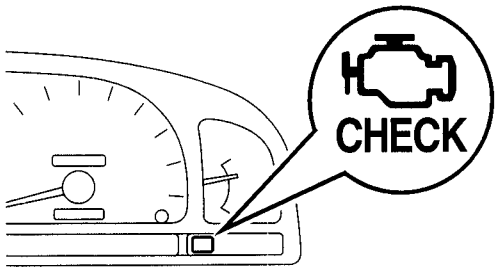

P22302
P22301

Diagnosis Inspection (Normal Mode)

MALFUNCTION INDICATOR LAMP (MIL) CHECK

1. The MIL comes on when the ignition switch is turned ON and the engine is not running.

   HINT: If the MIL does not light up, troubleshoot the combination meter (See page BE-33).

2. When the engine is started, the MIL should go off. If the lamp remains on, the diagnosis system has detected a malfunction or abnormality in the system.

DIAGNOSTIC TROUBLE CODE (DTC) CHECK

NOTICE (TOYOTA hand-held tester only): When the diagnosis system is switched from normal mode to check mode, it erases all DTC and freezed frame data recorded in normal mode. So before switching modes, always check the DTC and freezed frame data, and note them down.

1. Prepare the OBD II scan tool (complying with SAE J1978) or TOYOTA hand-held tester.
2. Connect the OBD II scan tool or TOYOTA hand-held tester to DLC3 at the lower of the instrument panel.
3. Turn the ignition switch ON and switch the OBD II scan tool or TOYOTA hand-held tester main switch ON.
4. Use the OBD II scan tool or TOYOTA hand-held tester to check the DTC and freezed frame data, note them down. (For operating instructions, see the OBD II scan tool's instruction book.)
5. See page EG-196 to confirm the details of the DTC.

NOTICE: When simulating symptoms with an OBD II scan tool (excluding TOYOTA hand-held tester) to check the DTC use normal mode. For codes on the DTC chart subject to "2 trip detection logic", turn the ignition switch OFF after the symptom is simulated the first time. Then repeat the simulation process again. When the problem has been simulated twice, the MIL lights up and the DTC are recorded in the ECM.

Diagnosis Inspection (Check Mode)

TOYOTA HAND-HELD TESTER only

Compared to the normal mode, the check mode has an increased sensitivity to detect malfunctions.

Furthermore, the same diagnostic items which are detected in the normal mode can also be detected in the check mode.

DTC CHECK

1. Initial conditions.
(a) Battery positive voltage 11 V or more.
(b) Throttle valve fully closed.
(c) Transmission in park or neutral position.
(d) Air conditioning switched OFF.
2. Turn ignition switch OFF.
3. Prepare the TOYOTA hand-held tester.
4. Connect the TOYOTA hand-held tester to DLC3 at the lower of the instrument panel.
5. Turn the ignition switch ON and push the TOYOTA hand-held tester main switch ON.
6. Switch the TOYOTA hand-held tester normal mode to check mode. (Check that the MIL flashes.)
7. Start the engine. (The MIL goes out after the engine start.)
8. Simulate the conditions of the malfunction described by the customer.

   NOTICE: Leave the ignition switch ON until you have checked the DTC, etc.
9. After simulating the malfunction conditions, use the TOYOTA hand-held tester diagnosis selector to check the DTC and freezed frame data, etc.

   HINT: Take care not to turn the ignition switch OFF. Turning the ignition switch OFF swithes the diagnosis system from check mode to normal mode, so all diagnostic codes, etc. are erased.
10. After checking the DTC, inspect the applicable circuit.

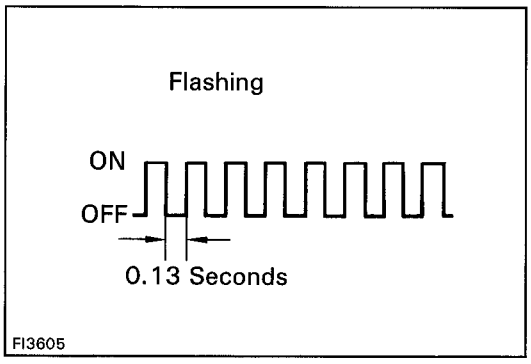

DTC CLEARANCE

The following actions will erase the DTC and freezed frame data.

1. Operating the OBD II scan tool (complying with SAE J1978) or TOYOTA hand-held tester to erase the codes. (See the OBD II scan tool's instruction book for operating instructions.)
2. Disconnecting the battery terminals or EFI fuse.

NOTICE: If the TOYOTA hand-held tester switches the ECM from normal mode to check mode or vice-versa, or if the ignition switch is turned from ON to ACC or OFF during check mode, the DTC and freezed frame data will be erased.

DTC CHART (SAE Controlled)

HINT: Parameters listed in the chart may not be exactly the same as your reading due to the type of instrument or other factors.

If a malfunction code is displayed during the DTC check in check mode, check the circuit for that code listed in the table below (Proceed to the page given for that circuit).

DTC No. (See Page)	Detection Item	Trouble Area	MIL*	Memory
P0100 (EG-208)	Mass Air Flow Circuit Malfunction	• Open or short in mass air flow meter circuit • Mass air flow meter • ECM	○	○
P0101 (EG-211)	Mass Air Flow Circuit Range/Performance Probelm	• Mass air flow meter	○	○
P0110 (EG-212)	Intake Air Temp. Circuit Malfunction	• Open or short in intake air temp. sensor circuit • Intake air temp. sensor • ECM	○	○
P0115 (EG-215)	Engine Coolant Temp. Circuit Malfunction	• Open or short in engine coolant temp. sensor circuit • Engine coolant temp. sensor • ECM	○	○
P0116 (EG-218)	Engine Coolant Temp. Circuit Range/ Performance Problem	• Engine coolant temp. sensor • Cooling system	○	○
P0120 (EG-219)	Throttle/Pedal Position Sensor/Switch "A" Circuit Malfunction	• Open or short in throttle position sensor circuit • Throttle position sensor • ECM	○	○
P0121 (EG-222)	Throttle/Pedal Position Sensor/Switch "A" Circuit Range/ Performance Problem	• Throttle position sensor	○	○
P0125 (EG-223)	Insufficient Coolant Temp. for Closed Loop Fuel Control	• Open or short in heated oxygen sensor circuit • Heated oxygen sensor	○	○
P0130 (EG-225)	Heated Oxygen Sensor Circuit Malfunction (Bank 1 Sensor 1)	• Heated oxygen sensor • Fuel trim malfunction	○	○
P0133 (EG-227)	Heated Oxygen Sensor Circuit Slow Response (Bank 1 Sensor 1)	• Heated oxygen sensor	○	○

*: ○ ··· MIL lights up

DTC CHART (Cont'd)

DTC No. (See Page)	Detection Item	Trouble Area	MIL*	Memory
P0135 (EG-227)	Heated Oxygen Sensor Heater Circuit Malfunction (Bank 1 Sensor 1)	• Open or short in heater circuit of heated oxygen sensor • Heated oxygen sensor heater • ECM	○	○
P0136 (EG-228)	Heated Oxygen Sensor Circuit Malfunction (Bank 1 Sensor 2)	• Heated oxygen sensor	○	○
P0141 (EG-227)	Heated Oxygen Sensor Heater Circuit Malfunction (Bank 1 Sensor 2)	• Same as DTC No. P0135	○	○
P0171 (EG-230)	System too Lean (Fuel Trim)	• Air intake (hose loose) • Fuel line pressure • Injector blockage • Heated oxygen sensor malfunction • Mass air flow meter • Engine coolant temp. sensor	○	○
P0172 (EG-230)	System too Rich (Fuel Trim)	• Fuel line pressure • Injector leak, blockage • Heated oxygen sensor malfunction • Mass air flow meter • Engine coolant temp. sensor	○	○
P0300 (EG-232)	Random/Multiple Cylinder Misfire Detected	• Ignition system • Injector • Fuel line pressure • EGR • Compression pressure • Valve clearance not ot specification • Valve timing • Mass air flow meter • Engine coolant temp. sensor	○	○
P0301 P0302 P0303 P0304 (EG-232)	Misfire Detected – Cylinder 1 – Cylinder 2 – Cylinder 3 – Cylinder 4			
P0325 (EG-236)	Knock Sensor 1 Circuit Malfunction	• Open or short in knock sensor 1 circuit • Knock sensor 1 (looseness) • ECM	○	○
P0335 (EG-238)	Crankshaft Position Sensor "A" Circuit Malfunction	• Open or short in crankshaft position sensor circuit • Crankshaft position sensor • Starter • ECM	○	○
P0336 (EG-240)	Crankshaft Position Sensor "A" Circuit Range/Performance	• Valve timing • Distributor installation • ECM	○	○

*: ○ ··· MIL lights up

DTC CHART (Cont'd)

DTC No. (See Page)	Detection Item	Trouble Area	MIL*	Memory
P0340 (EG-241)	Camshaft Position Sensor Circuit Malfunction	• Open or short in camshaft position sensor circuit • Camshaft position sensor • Distributor • Starter • ECM	○	○
P0401 (EG-242)	Exhaust Gas Recirculation Flow Insufficient Detected	• EGR valve stuck closed • Short in VSV circuit for EGR • Open in EGR gas temp. sensor circuit • EGR hose disconnected • ECM	○	○
P0402 (EG-250)	Exhaust Gas Recirculation Flow Excessive Detected	• EGR valve stuck open • EGR VSV open malfunction • Open in VSV circuit for EGR • Short in EGR gas temp. sensor circuit • ECM	○	○
P0420 (EG-253)	Catalyst System Efficiency Below Threshold	• Three-way catalytic converter • Open or short in heated oxygen sensor circuit • Heated oxygen sensor	○	○
P0440 (EG-256)	Evaporative Emission Control System Malfunction (Only for 4WD models)	• Vapor pressure sensor • Fuel tank cap incorrectly installed • Fuel tank cap cracked or damaged • Vacuum hose cracked, holed, blocked, damaged, or disconnected • Hose or tube cracked, holed, damaged or loose • Fuel tank cracked, holed or damaged • Charcoal canister cracked, holed or damaged	○	○
P0441 (EG-262)	Evaporative Emission Control System Incorrect Purge Flow (For 2WD models)	• Open or short in VSV circuit for EVAP • VSV for EVAP • ECM • Vacuum hose blocked or disconnected • Charcoal canister	○	○
P0441 (EG-265)	Evaporative Emission Control System Incorrect Purge Flow (For 4WD models)	• Open or short in VSV circuit for vapor pressure sensor • VSV for vapor pressure sensor • Open or short in vapor pressure sensor circuit • Vapor pressure sensor	○	○
P0446 (EG-265)	Evaporative Emission Control System Vent Control Malfunction (Only for 4WD models)	• Open or short in VSV circuit for EVAP • VSV for EVAP • Vacuum hose cracks, hole, blocked damaged or disconnected • Charcoal canister cracks, hole or damaged	○	○

*: ○ ··· MIL lights up

DTC CHART (Cont'd)

DTC No. (See Page)	Detection Item	Trouble Area	MIL*	Memory
P0450 (EG-274)	Evaporative Emission Control System Pressure Sensor Malfunction (Only for 4WD models)	• Open or short in vapor pressure sensor circuit • Vapor pressure sensor • ECM	○	○
P0500 (EG-276)	Vehicle Speed Sensor Malfunction	• Combination meter • Open or short in speed sensor circuit • ECM • Speedometer cable	○	○
P0505 (EG-278)	Idle Control System Malfunction	• IAC valve is stuck or closed • Open or short in IAC valve circuit • Air intake (hose loose)	○	○
P0510 (EG-280)	Closed Throttle Position Switch Malfunction	• Open in closed throttle position switch circuit • Closed throttle position switch • ECM	○	○

*: ○ ··· MIL lights up

DTC CHART (Manufacture Controlled)

DTC No. (See Page)	Detection Item	Trouble Area	MIL*	Memory
P1300 (EG-282)	Igniter Circuit Malfunction	• Open or short in IGF or IGT circuit from igniter to ECM • Igniter • ECM	○	○
P1335 (EG-286)	Crankshaft Position Sensor Circuit Malfunction (during engine running)	• Open or short in crankshaft position sensor circuit • Crankshaft position sensor • ECM	–	○
P1500 (EG-286)	Starter Signal Circuit Malfunction	• Open or short in starter signal circuit • Open or short in ignition switch or starter relay circuit • ECM	–	○
P1600 (EG-287)	ECM BATT Malfunction	• Open in back up power source circuit • ECM	○	○
P1780 (EG-289)	Park/Neutral Position Switch Malfunction	• Short in park/neutral position switch circuit • Park/neutral position switch • ECM	○	○

*: – ··· MIL does not light up
○ ··· MIL lights up

FAIL-SAFE CHART

If any of the following codes is recorded, the ECM enters fail-safe mode.

DTC No.	Fail-Safe Operation	Fail-Safe Deactivation Conditions
P0100	• Ignition timing fixed at 5° BTDC. • Injection time fixed Starting ····· 11.6 msec. CTP switch ON ····· 3.2 msec. CTP switch OFF ····· 6.0 msec.	Return to normal condition
P0110	Intake air temp. is fixed at 20°C (68°F)	Returned to normal condition
P0115	Engine coolant temp. is fixed at 80°C (176°F)	Returned to normal condition
P0120	VTA is fixed at 0°	The following condition must be repeated at least 2 times consecutively When closed throttle position switch is ON: 0.1 V ≦ VTA ≦ 0.95 V
P0135 P0141	The heater circuit in which an abnormality is detected is turned off	Ignition switch OFF
P0325	Max. timing retardation	Ignition switch OFF
P0336	Fuel cut	Returned to normal condition
P1300	Fuel cut	Returned to normal condition

Back-Up Function

I there is truoble with the program in the ECM and ignition signals (IGT) are not output from the microcomputer, the ECM controls fuel injection and ignition timing at predetermined levels as a back-up function to make it possible to continue to operate the vehicle.
Furthermore, the injection duration is calculated from the starting signal (STA) and the closed trottle position switch signal (IDL). Also, the ignition timing is fixed at the initial ignition timing, 5° BTDC, without relation to the engine speed.

HINT: If the engine is controlled by the back-up function, the MIL lights up to warn the driver of the malfunction but the DTC is not output.

CHECK FOR INTERMITTENT PROBLEMS

TOYOTA HAND-HELD TESTER only

By putting the vehicle's ECM in check mode, 1 trip detection logic is possible instead of 2 trip detection logic and sensitivity to detect open circuits is increased. This makes it easier to detect intermittent problems.

CLEAR DIAGNOSTIC TROUBLE CODES

See page EG-191

SET CHECK MODE

See page EG-191

PERFORM A SIMULATION TEST

See page IN-18

CONNECTOR CONNECTION AND TERMINAL INSPECTION

See page IN-24

VISUAL CHECK AND CONTACT PRESSURE CHECK

See page IN-24

CONNECTOR HANDLING

See page IN-24

BASIC INSPECTION

When the malfunction code is not confirmed in the DTC check, troubleshooting should be performed in the order for all possible circuits to be considered as the causes of the problems.
In many cases, by carrying out the basic engine check shown in the following flow chart, the location causing the problem can be found quickly and efficiently. Therefore, use of this check is essential in engine troubleshooting.

1 **Is battery positive voltage 11 V or more when engine is stopped?**

YES

NO → **Charge or replace battery.**

2 **Is engine cranked?**

YES

NO → **Proceed to ST section and continue to troubleshoot.**

3 **Does engine start?**

YES

NO → **Go to step 7 .**

4 **Check air filter.**

P Remove air filter.

C Visually check that the air cleaner element is not dirty or excessively oily.

HINT: If necessary, clean element with compressed air. First blow from inside thoroughly, then blow from outside of element.

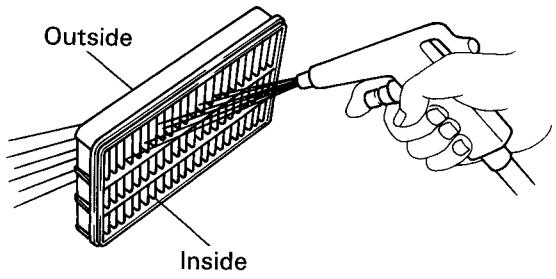

P00495

OK

NG → **Repair or replace.**

5 Check idle speed.

P (1) Warm up engine to normal operating temperature.
(2) Switch off all accessories.
(3) Switch off air conditioning.
(4) Shift transmission into "N" position.
(5) Connect the OBD II scan tool or TOYOTA hand-held tester to DLC3 on the vehicle.

C Use CURRENT DATA to check the engine idle speed.

OK **Idle speed: 650 ~ 750 rpm**

OK

NG **Proceed to matrix chart of problem symptoms on page EG-207.**

6 Check ignition timing.

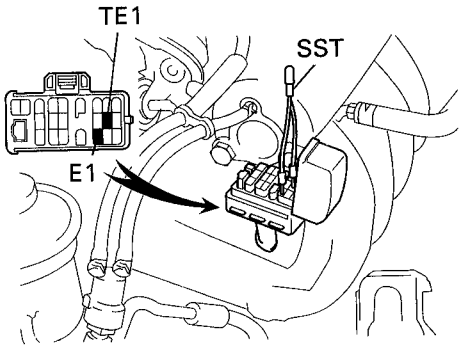

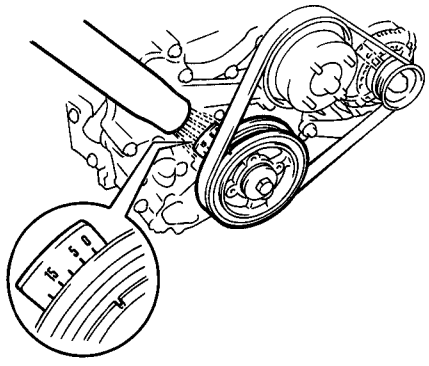

P25105
PI7183

P (1) Warm up engine to normal operating temperature.
(2) Shift transmission into "N" position.
(3) Keep the engine speed at idle.
(4) Using SST, connect terminals TE1 and E1 of DLC1.
SST 09843 – 18020
(5) Using a timing light, connect the tester to No.1 high-tension cord.

C Check ignition timing.

OK **Ignition timing: 3 – 7° BTDC at idle**

OK

NG **Proceed to IG section and continue to troubleshoot.**

Proceed to matrix chart of problem symptoms on page EG-207.

7 Check fuel pressure.

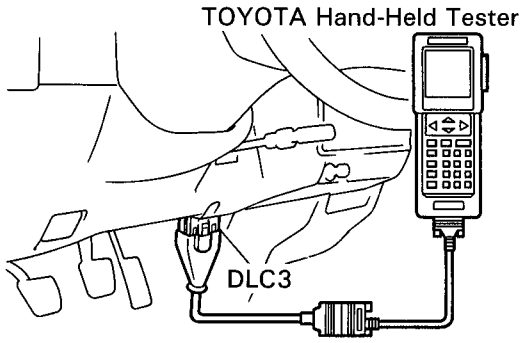

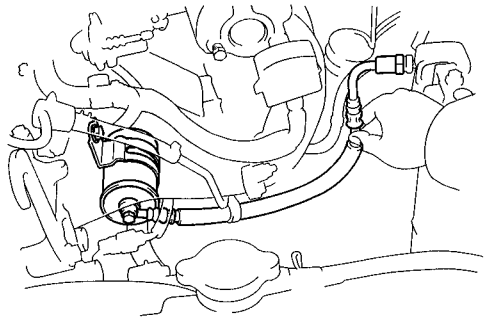

P22300
P25110

P
(1) Be sure that enough fuel is in the tank.
(2) Connect the TOYOTA hand-held tester to the DLC3.
(3) Turn ignition switch ON and push TOYOTA hand-held tester main switch ON.
(4) Use ACTIVE TEST mode to operate the fuel pump.
(5) Please refer to the TOYOTA hand-held tester operator's manual for further details.
(6) If you have no TOYOTA hand-held tester, connect the positive (+) and negative (−) leads from the battery to the fuel pump conncetor (See page EG-126).

C Check for fuel pressure in the fuel inlet hose when it is pinched off.

HINT: At this time, you will hear a fuel flowing noise.

OK

NG → **Proceed to page EG-124 and continue to troubleshoot.**

8 Check for spark.

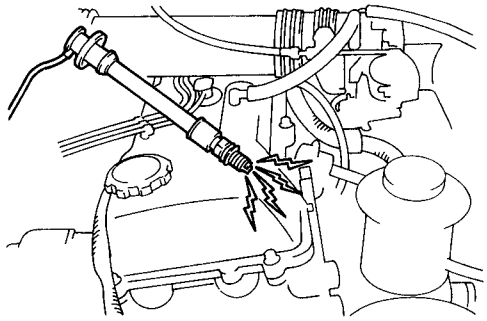

P25086

P
(1) Disconncect the high-tension cord from spark plug.
(2) Remove the spark plug.
(3) Install the spark plug to high-tension cord.
(4) Disconnect the injector connector.
(5) Ground the spark plug.

C Check if spark occurs while engine is being cranked.

NOTICE: To prevent excess fuel being injected from the injectors during this test, don't crank the engine for more than 5 — 10 seconds at a time.

OK

NG → **Proceed to page IG section and continue to troubleshoot.**

Proceed to matrix chart of problem symptoms on page EG-207.

PARTS LOCATION

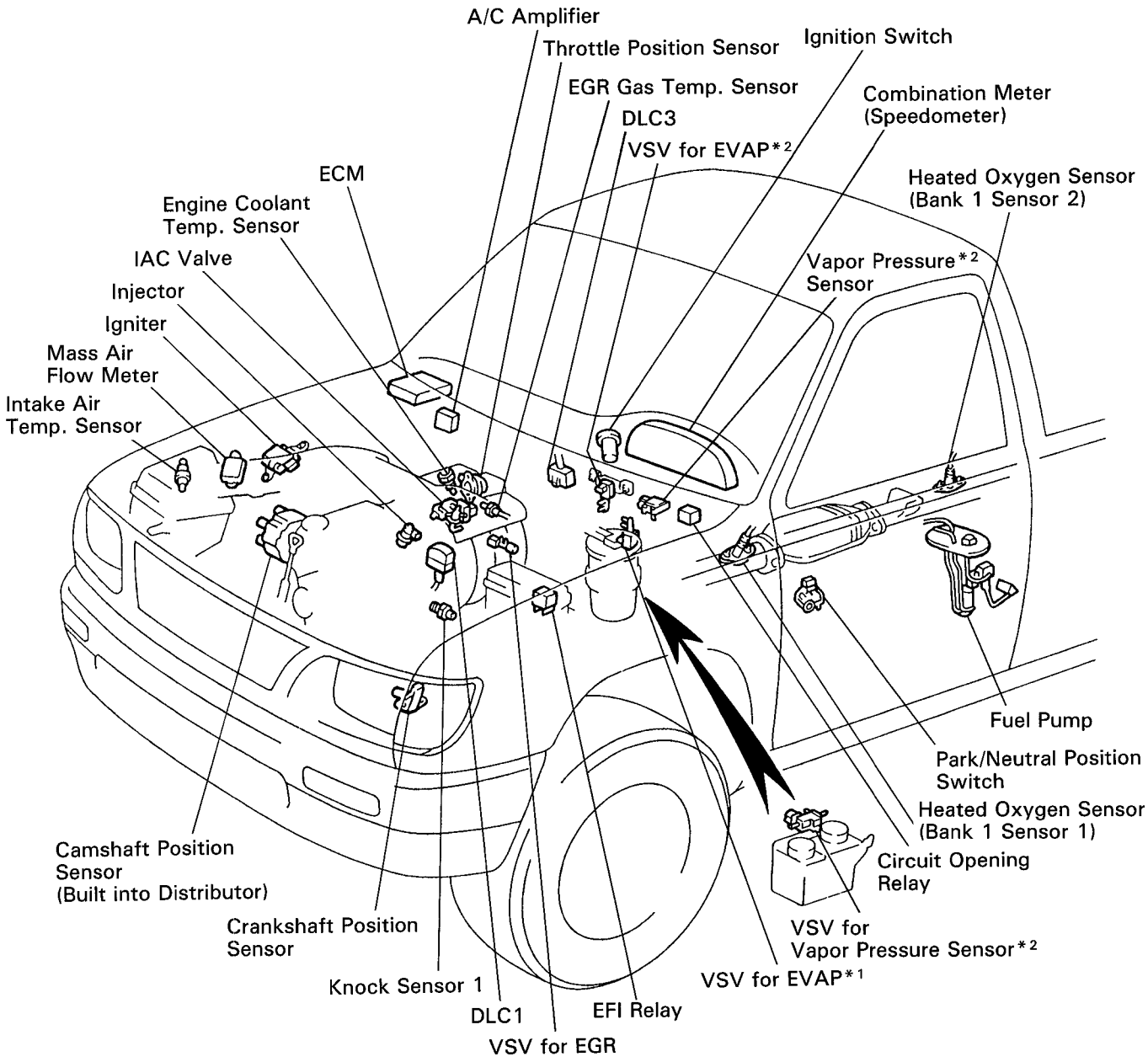

*1: 2WD
*2: 4WD

S00030

STANDARD VALUE OF ECM TERMINALS

ECM Terminals (for 3RZ-FE M/T, 2RZ-FE)

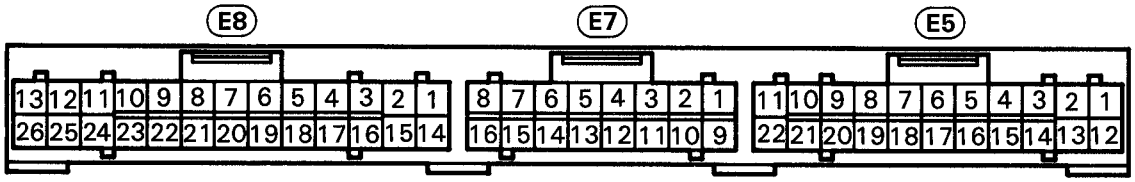

P19559

Symbols (Terminals No.)	Wiring Color	STD Voltage (V)	Condition
BATT (E5-1) – E1 (E8-14)	B-Y ↔ BR	9 – 14	Always
+B (E5-12) – E1 (E8-14)	W-R ↔ BR	9 – 14	IG switch ON
VCC (E7-1) – E2 (E7-9)	G-Y ↔ BR-B	4.5 – 5.5	IG switch ON
IDL (E7-12) – E2 (E7-9)	Y-L ↔ BR-B	0 – 3.0	IG switch ON and apply vacuum to the throttle opener Throttle valve fully closed
		9 – 14	IG switch ON Throttle valve fully open
VTA (E7-11) – E2 (E7-9)	Y ↔ BR-B	0.3 – 0.8	IG switch ON Throttle valve fully closed
		3.2 – 4.9	IG switch ON Throttle valve fully open
VG (E7-2) – E3 (E7-16)	GR-R ↔ BR-W	1.0 – 1.5	Idling, A/C switch OFF
THA (E7-7) – E2 (E7-9)	Y-G ↔ BR-B	0.5 – 3.4	Idling, Intake air temp. 20°C (68°F)
THW (E7-4) – E2 (E7-9)	G-R ↔ BR-B	0.2 – 1.0	Idling, Engine coolant temp. 80°C (176°F)
STA (E5-11) – E1 (E8-14)	B-W ↔ BR	6.0 or more	Cranking
#10 (E8-12) #20 (E8-11) – E01 (E8-13)	W-R W ↔ BR	9 – 14	IG switch ON
		Pulse generation (See page EG-233)	Idling
IGT (E8-20) – E1 (E8-14)	B-L ↔ BR	Pulse generation (See page EG-284)	Idling
IGF (E8-3) – E1 (E8-14)	B-Y ↔ BR	Below 2.0	IG switch ON
		Pulse generation (See page EG-284)	Idling
G (E8-5) – G ⊖ (E8-18)	Y ↔ B *1 L *2	Pulse generation (See page EG-239)	Idling
NE (E8-4) – NE ⊖ (E8-17)	R ↔ G	Pulse generation (See page EG-239)	Idling
FC (E5-14) – E1 (E8-14)	G-Y ↔ BR	9 – 14	IG switch ON
EGR (E8-6) – E1 (E8-14)	P-B ↔ BR	9 – 14	IG switch ON
PRG (E8-23)*3 EVP1 (E8-23)*4 – E1 (E8-14)	W-G W-G ↔ BR	9 – 14	IG switch ON

*1: A/T
*2: M/T
*3: 2WD
*4: 4WD

STANDARD VALUE OF ECM TERMINALS (Cont'd)

Symbols (Terminals No.)	Wiring Color	STD Voltage (V)	Condition
RSC (E8-9) RSO (E8-10) – E1 (E8-14)	B B-R ↔ BR	9 – 14	IG switch ON Disconnect (E8) of ECM connector
OX1 (E7-6) – E1 (E8-14)	W ↔ BR	Pulse generation	Maintain engine speed at 2,500 rpm for 2 minutes after warming up
HT1 (E8-2) HT2 (E8-15) – E03 (E8-25)	P-G R-W ↔ BR	Below 3.0	Idling
		9 – 14	IG switch ON
KNK (E7-13) – E1 (E8-14)	B ↔ BR	Pulse generation (See page EG-238)	Idling
*1 NSW (E5-22) – E1 (E8-14)	B ↔ BR	9 – 14	IG switch ON Other shift position in "P", "N" position
		0 – 3.0	IG switch ON Shift position in "P", "N" position
SP1 (E5-9) – E1 (E8-14)	G-O ↔ BR	Pulse generation (See page EG-277)	IG switch ON Rotate driving wheel slowly
TE1 (E7-15) – E1 (E8-14)	V-W ↔ BR	9 – 14	IG switch ON
W (E5-5) – E1 (E8-14)	V ↔ BR	9 – 14	Idling
		Below 3.0	IG switch ON
ACT (E5-8) – E1 (E8-14)	L-B ↔ BR	9 – 14	A/C switch ON at idling
		Below 2.0	A/C switch OFF
AC1 (E5-10) – E1 (E8-14)	L-Y ↔ BR	Below 2.0	A/C switch ON at idling
		9 – 14	A/C switch OFF
*2TPC (E8-21) – E1 (E8-14)	GR-R ↔ BR	9 – 14	IG switch ON
*2 PTNK (E7-10) – E2 (E7-9)	R-Y ↔ BR-B	2.9 – 3.7	IG switch ON
		Below 0.5	Apply vacuum (less than 66.7 kPa, 500 mmHg, 19.7 in.Hg)

*1: A/T
*2: 4WD

STANDARD VALUE OF ECM TERMINALS

ECM Terminals (for 3RZ-FE A/T)

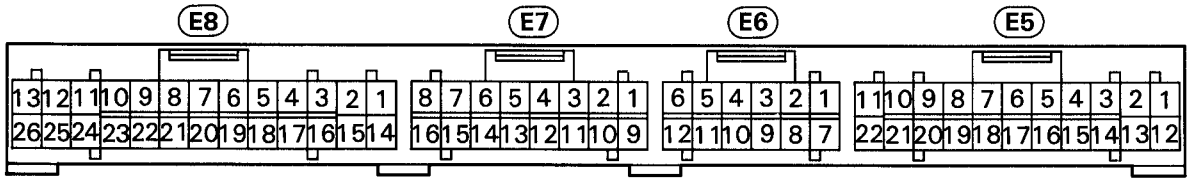

FI6526

Symbols (Terminals No.)	Wiring Color	STD Voltage (V)	Condition
BATT (E5-2) – E1 (E8-24)	B-Y ↔ BR	9 – 14	Always
+B (E5-12) – E1 (E8-24)	W-R ↔ BR	9 – 14	IG switch ON
VCC (E7-1) – E2 (E7-9)	G-Y ↔ BR-B	4.5 – 5.5	IG switch ON
IDL (E7-11) – E2 (E7-9)	Y-L ↔ BR-B	0 – 3.0	IG switch ON and apply vacuum to the throttle opener Throttle valve fully closed
		9 – 14	IG switch ON Throttle valve fully open
VTA (E7-10) – E2 (E7-9)	Y ↔ BR-B	0.3 – 0.8	IG switch ON Throttle valve fully closed
		3.2 – 4.9	IG switch ON Throttle valve fully open
VG (E7-2) – E3 (E7-3)	GR-R ↔ BR-W	1.0 – 1.5	Idling, A/C switch OFF
THA (E7-12) – E2 (E7-9)	Y-G ↔ BR-B	0.5 – 3.4	Idling, Intake air temp. 20°C (68°F)
THW (E7-4) – E2 (E7-9)	G-R ↔ BR-B	0.2 – 1.0	Idling, Engine coolant temp. 80°C (176°F)
STA (E5-11) – E1 (E8-24)	B-W ↔ BR	6.0 or more	Cranking
#10 (E8-12) #20 (E8-11) – E01 (E8-13)	W-R W ↔ BR	9 – 14	IG switch ON
		Pulse generation (See page EG-233)	Idling
IGT (E8-23) – E1 (E8-24)	B-L ↔ BR	Pulse generation (See page EG-284)	Idling
IGF (E8-17) – E1 (E8-24)	B-Y ↔ BR	Below 2.0	IG switch ON
		Pulse generation (See page EG-284)	Idling
G (E6-11) – G ⊖ (E6-5)	Y ↔ L	Pulse generation (See page EG-239)	Idling
NE (E6-12) – NE ⊖ (E6-6)	R ↔ G	Pulse generation (See page EG-239)	Idling
FC (E8-14) – E1 (E8-24)	G-Y ↔ BR	9 – 14	IG switch ON
EGR (E8-22) – E1 (E8-24)	P-B ↔ BR	9 – 14	IG switch ON
EVP1 (E6-1) – E1 (E8-24)	W-G ↔ BR	9 – 14	IG switch ON

STANDARD VALUE OF ECM TERMINALS (Cont'd)

Symbols (Terminals No.)	Wiring Color	STD Voltage (V)	Condition
RSC (E8-6) RSO (E8-7) – E1 (E8-24)	B B-R ↔ BR	9 – 14	IG switch ON Disconnect (E8) of ECM connector
OX1 (E7-5) – E1 (E8-24)	W ↔ BR	Pulse generation	Maintain engine speed at 2,500 rpm for 2 minutes after warming up
HT1 (E8-3) HT2 (E8-16) – E03 (E8-25)	P-G R-W ↔ BR	Below 3.0	Idling
		9 – 14	IG switch ON
KNK (E7-6) – E1 (E8-24)	B ↔ BR	Pulse generation (See page EG-238)	Idling
NSW (E5-22) – E1 (E8-24)	B ↔ BR	9 – 14	IG switch ON Other shift position in "P", "N" position
		0 – 3.0	IG switch ON Shift position in "P", "N" position
SP1 (E5-8) – E1 (E8-24)	G-O ↔ BR	Pulse generation (See page EG-277)	IG switch ON Rotate driving wheel slowly
TE1 (E7-7) – E1 (E8-24)	V-W ↔ BR	9 – 14	IG switch ON
W (E5-4) – E1 (E8-24)	V ↔ BR	9 – 14	Idling
		Below 3.0	IG switch ON
ACT (E5-6) – E1 (E8-24)	L-B ↔ BR	9 – 14	A/C switch ON at idling
		Below 2.0	A/C switch OFF
AC1 (E5-7) – E1 (E8-24)	L-Y ↔ BR	Below 2.0	A/C switch ON at idling
		9 – 14	A/C switch OFF
TPC (E6-2) – E1 (E8-24)	GR-R ↔ BR	9 – 14	IG switch ON
PTNK (E8-18) – E2 (E7-9)	R-Y ↔ BR-B	2.9 – 3.7	IG switch ON
		Below 0.5	Apply vacuum (less than 66.7 kPa, 500 mmHg, 19.7 in.Hg)

ENGINE OPERATING CONDITION

NOTICE: The values given below for "Normal Condition" are representative values, so a vehicle may still be normal even if its value varies from those listed here. So do not decide whether a part is faulty or not solely according to the "Normal Condition" here.

CARB Mandated Signals

TOYOTA hand-held tester display	Measurement Item	Normal Condition*1
FUEL SYS #1	Fuel System Bank 1 OPEN: Air-fuel ratio feedback stopped CLOSED: Air-fuel ratio feedback operating	Idling after warming up: CLOSED
CALC LOAD	Calculator Load: Current intake air volume as a proportion of max. intake air volume	Idling: 17.2 ~ 24.6%*2 15.9 ~ 22.8%*3 Racing without load (2,500 rpm): 16.4 ~ 23.1%*2 15.2 ~ 22.1%*3
COOLANT TEMP.	Engine Coolant Temp. Sensor Value	After warming up: 80 ~ 95°C (176 ~ 203°F)
SHORT FT #1	Short-term Fuel Trim Bank 1	0 ± 20%
LONG FT #1	Long-term Fuel Trim Bank 1	0 ± 20%
ENGINE SPD	Engine Speed	Idling: 700 ± 50 rpm
VEHICLE SPD	Vehicle Speed	Vehicle Stopped: 0 km/h (0 mph)
IGN ADVANCE	Ignition Advance Ignition Timing of Cylinder No.1	Idling: BTDC 7 ~ 18°*2 7 ~ 13°*3
INTAKE AIR	Intake Air Temp. Sensor Value	Equivalent to ambient temp.
MAF	Air Flow Rate through Mass Air Flow Meter	Idling: 2.6 ~ 3.6 gm/sec.*2 2.6 ~ 3.7 gm/sec.*3 Racing without load (2,500 rpm): 9.2 ~ 12.9 gm/sec.*2 9.2 ~ 13.3 gm/sec.*3
THROTTLE POS	Voltage Output of Throttle Position Sensor Calculated as a percentage 0 V → 0%, 5 V → 100%	Throttle Fully closed: 7 ~ 11% Fully open: 65 ~ 75%
O2S B1, S1	Voltage Output of Oxygen Sensor Bank 1, Sensor 1	Idling: 0.1 ~ 0.9 V
O2FT B1, S1	Oxygen Sensor Fuel Trim Bank 1, Sensor 1 (Same as SHORT FT #1)	0 ± 20%
O2S B1, S2	Voltage Output of Oxygen Sensor Bank 1, Sensor 2	Driving 50 km/h (31 mph): 0.1 ~ 0.9 V

*1: If no conditions are specifically stated for "Idling", it means the shift lever is at N or P position, the A/C switch is OFF and all accessory switches are OFF.
*2: 2RZ-FE engine
*3: 3RZ-FE engine

TOYOTA Enhanced Signals

TOYOTA hand-held tester display	Measurement Item	Normal Condition*1
MISFIRE RPM	Engine RPM for first misfire range	Misfire 0: 0 RPM
MISFIRE LOAD	Engine load for first misfire range	Misfire 0: 0 g/r
INJECTOR	Fuel injection time for cylinder No.1	Idling: 2.6 ~ 4.6 ms*2 2.5 ~ 4.3 ms*3
IAC DUTY RATIO	Intake Air Control Valve Duty Ratio Opening ratio rotary solenoid type IAC valve	Idling: 24.8 ~ 50.0%
STARTER SIG	Starter Signal	Cranking: ON
CTP SW	Closed Throttle Position Switch Signal	Throttle Fully Closed: ON
A/C SIG	A/C Switch Signal	A/C ON : ON
STOP LIGHT SW	Stop Light Switch Signal	Stop light switch ON: ON
FC IDL	Fuel Cut Idle: Fuel cut when throttle valve fully closed, during deceleration	Fuel cut operating: ON
FC TAU	Fuel Cut TAU: Fuel cut during very light load	Fuel cut operating: ON
CYL #1, CYL #2, CYL #3, CYL #4	Abnormal revolution variation for each cylinder	0%
IGNITION	Total number of ignition for every 1,000 revolutions	0 ~ 2,000
EGRT GAS	EGR Gas Temp. Sensor Value	EGR not operating: Temperature between intake air temp. and engine coolant temp.
EGR SYSTEM	EGR System Operating Condition	Idling: OFF
A/C CUT SIG	A/C Cut Signal	A/C S/W OFF: ON
FUEL PUMP	Fuel Pump Signal	Idling: ON
EVAP (PURGE) VSV	EVAP VSV Signal	Idling: OFF
TOTAL FT B1	Total Fuel Trim Bank 1: Average value for fuel trim system of bank 1	Idling: 0.8 ~ 1.2 V
O2 LR B1, S1	Oxygen Sensor Lean Rich Bank 1, Sensor 1 Response time for oxygen sensor output to switch from lean to rich	Idling after warmed up: 0 ~ 1,000 m sec.
O2 RL B1, S1	Oxygen Sensor Rich Lean Bank 1, Sensor 1 Response time for oxygen sensor output to switch from rich to lean	Idling after warmed up: 0 ~ 1,000 m sec.

*1: If no conditions are specifically stated for "Idling", it means the shift lever is at N or P position, the A/C switch is OFF and all accessory switches are OFF.
*2: 2RZ-FE engine
*3: 3RZ-FE engine

MATRIX CHART OF PROBLEM SYMPTOMS

When the malfunction code is not confirmed in the DTC check and the problem still can not be confirmed in the basic inspection, then proceed to this step and perform troubleshooting according to the numbered order given in the table below.

See page / Suspect area / Symptom		EG-286	EG-291	EG-294	ST-14, 15	EG-7	IN-29	AT section
		Starter signal circuit	ECM power source circuit	Fuel pump control circuit	Starter and starter relay	Compression	Engine control module(ECM)	A/T fauly
Does not start	Engine does not crank				1			
	No initial combustion		1	2				
	No complete combustion			1				
Difficult to start	Engine cranks normally	1		2		3		
	Cold engine	1		2				
	Hot engine	1		2				
Poor idling	High engine idle speed		1					
	Low engine idle speed			1				
	Rough idling			2		1		
	Hunting		1	2				
Poor drive-ability	Hesitation/Poor acceleration			1				2
	Surging			1				
Engine stall	Soon after starting			1				
	During A/C operation						1	

CIRCUIT INSPECTION

DTC P0100 Mass Air Flow Circuit Malfunction

CIRCUIT DESCRIPTION

The mass air flow meter uses a platinum hot wire. The hot wire air flow meter consists of a platinum hot wire, thermistor and a control circuit installed in a plastic housing. The hot wire air flow meter works on the principle that the hot wire and thermistor located in the intake air bypass of the housing detect any changes in the intake air temperature.

EG

The hot wire is maintained at the set temperature by controlling the current flow through the hot wire. This current flow is then measured as the output voltage of the air flow meter.

The circuit is constructed so that the platinum hot wire and thermistor provide a bridge circuit, with the power transistor controlled so that the potential of Ⓐ and Ⓑ remains equal to maintain the set temperature.

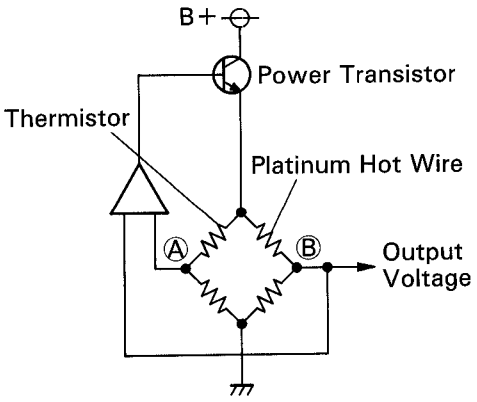

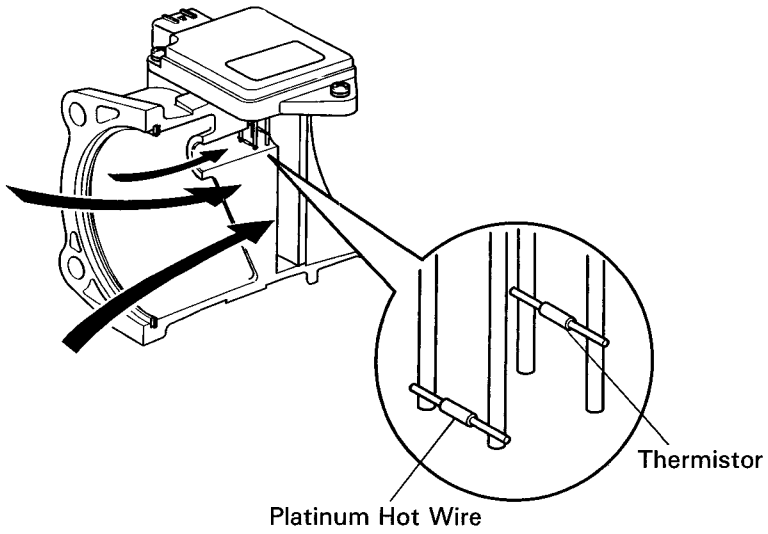

FI6929 FI7109

DTC No.	DTC Detecting Condition	Trouble Area
P0100	Open or short in mass air fow meter circuit with engine speed 4,000 rpm or less	• Open or short in mass air flow meter circuit • Mass air flow meter • ECM

If the ECM detects DTC "P0100" it operates the fail safe function, keeping the ignition timing and injection volume constant and making it possible to drive the vehicle.

HINT: After confirming DTC P0100 use the OBD II scan tool or TOYOTA hand-held tester to confirm the mass air flow ratio from "CURRENT DATA".

Mass Air Flow Value (gm/sec.)	Malfunction
Approx. 0	• Mass air flow meter power source circuit open • VG circuit open or short
202.2 or more	• E3 circuit open

WIRING DIAGRAM

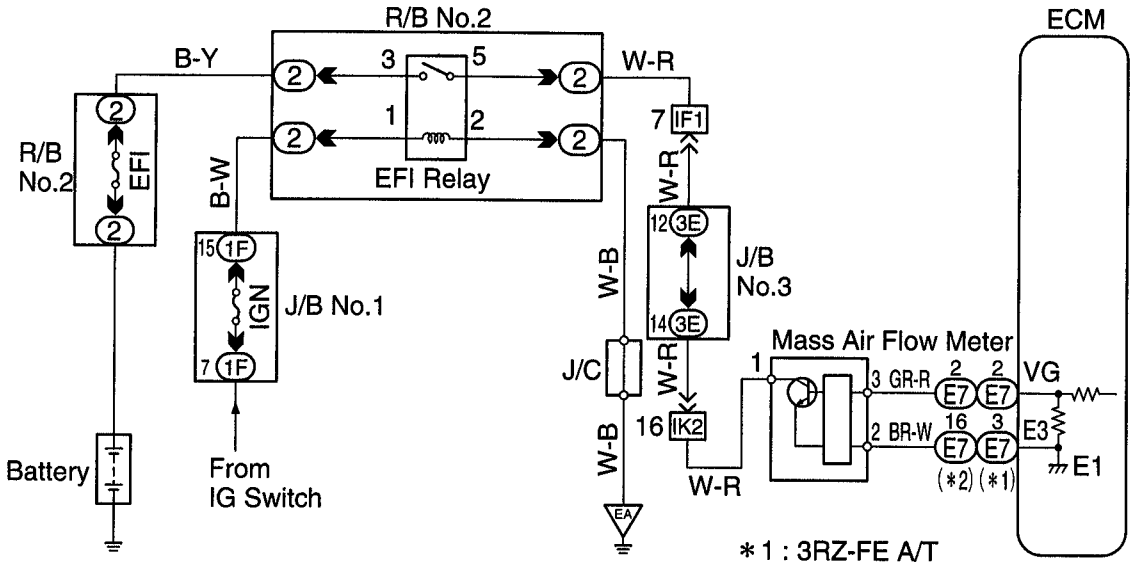

S00303

INSPECTION PROCEDURE

1 **Connect the OBD II scan tool or TOYOTA hand-held tester, and read value of mass air flow rate.**

P (1) Connect the OBD II scan tool or TOYOTA hand-held tester to the DLC3.
(2) Turn ignition switch ON and OBD II scan tool or TOYOTA hand-held tester main switch ON.
(3) Start the engine.

C Read mass air flow rate on the OBD II scan tool or TOYOTA hand-held tester.

Result

	Type I	Type II
Mass air flow rate	Approx. 0 gm/sec.	202.2 gm/sec. or more

Type I

Type II → **Go to step 5 .**

2 **Check voltage of mass air flow meter power source.**

ON

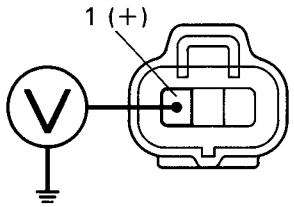

BE6653
P23803

P (1) Disconnect the mass air flow meter connector.
(2) Turn ignition switch ON.

C Measure voltage between terminal 1 of mass air flow meter connector and body ground.

OK **Voltage: 9 – 14 V**

OK

NG → **Check for open in harness and conncetor between EFI relay and mass air flow meter (See page IN-24).**

3 **Check voltage between terminal VG of ECM connector and body ground.**

For 3RZ-FE M/T, 2RZ-FE

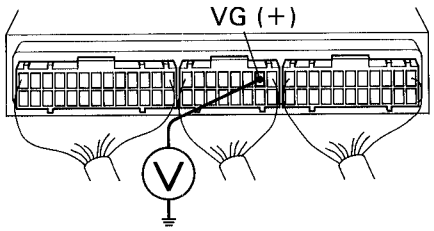

For 3RZ-FE A/T

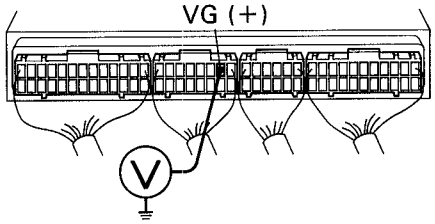

P23804
P23805

P (1) Remove glove compartment (See page EG-157).
(2) Start the engine.

C Measure voltage between terminal VG of ECM connector and body ground while engine is idling.

OK **Voltage: 1.0 — 1.5 V (A/C switch OFF)**

NG → **OK** → **Check and replace ECM (See page IN-29).**

4 **Check for open and short in harness and connector between mass air flow meter and ECM (See page IN-24).**

OK → **NG** → **Repair or replace harness or connector.**

Replace mass air flow meter.

5 **Check continuity between terminal E3 of ECM connctor and body ground.**

For 3RZ-FE M/T, 2RZ-FE

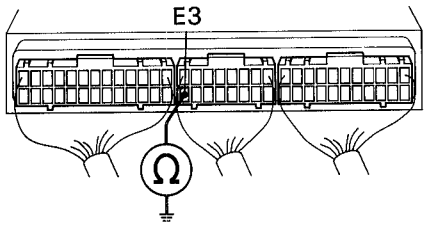

For 3RZ-FE A/T

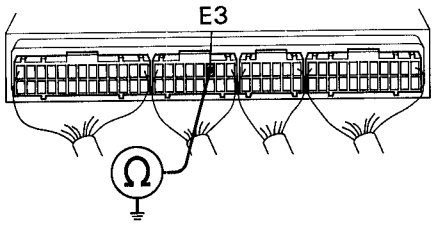

P23806
P23807

P Remove glove compartment (See page EG-157).

C Check continuity between terminal E3 of ECM connector and body ground.

OK **Continuity (1 Ω or less)**

OK → **NG** → **Check and replace ECM (See page IN-29).**

6	Check for open in harness and connector between mass air flow meter and ECM (See page IN-24).

OK

NG → Repair or replace harness or connector.

Replace mass air flow meter.

DTC P0101 Mass Air Flow Circuit Range/Performance Problem

CIRCUIT DESCRIPTION

Refer to ''Mass Air Flow Circuit Malfunction'' on page EG-208.

DTC. No.	DTC Detecting Condition	Trouble Area
P0101	Conditions (a) and (b) continue with engine speed 900 rpm or less (2 trip detection logic) (a) Closed throttle position switch: ON (b) Mass air flow meter output > 2.2 V	• Mass air flow meter

WIRING DIAGRAM

Refer to ''Mass Air Flow Circuit Malfunction'' on page EG-209.

INSPECTION PROCEDURE

1	Are there any other codes (besides DTC P0101) being output?

NO

YES → Go to relevant DTC chart.

Relace mass air flow meter.

DTC P0110 Intake Air Temp. Circuit Malfunction

CIRCUIT DESCRIPTION

The intake air temp. sensor is built into the air cleaner cap and senses the intake air temperature.
A thermistor built in the sensor changes the resistance value according to the intake air temperature.
The lower the intake air temperature, the greater the thermistor resistance value, and the higher the intake air temperature, the lower the thermistor resistance value (See Fig.1.).
The intake air temperature sensor is connected to the ECM (See below). The 5 V power source voltage in the ECM is applied to the intake air temperature sensor from the terminal THA via a resistor R.
That is, the resistor R and the intake air temperature sensor are connected in series. When the resistance value of the intake air temperature sensor changes in accordance with changes in the intake air temperature, the potential at terminal THA also changes. Based on this signal, the ECM increases the fuel injection volume to improve driveability during cold engine operation.
If the ECM detects the DTC "P0110", it operates the fail safe function in which the intake air temperature is assumed to be 20°C (68°F).

(fig-1)

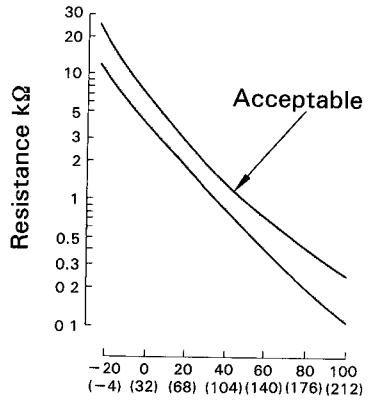

FI4741

Intake Air Temp. °C (°F)	Resistance (kΩ)	Voltage (V)
−20 (−4)	16.2	4.3
0 (32)	5.9	3.4
20 (68)	2.5	2.4
40 (104)	1.1	1.4
60 (140)	0.6	0.9
80 (176)	0.3	0.5
100 (212)	0.1	0.2

DTC No.	DTC Detecting Condition	Trouble Area
P0110	Open or short in intake air temp. sensor circuit	• Open or short in intake air temp. sensor circuit • Intake air temp. sensor • ECM

HINT: After confirming DTC P0110 use the OBD II scan tool or TOYOTA hand-held tester to confirm the intake air temperature from "CURRENT DATA".

Temperature Displayed	Malfunction
−40°C (−40°F)	Open circuit
140°C (284°F) or more	Short circuit

WIRING DIAGRAM

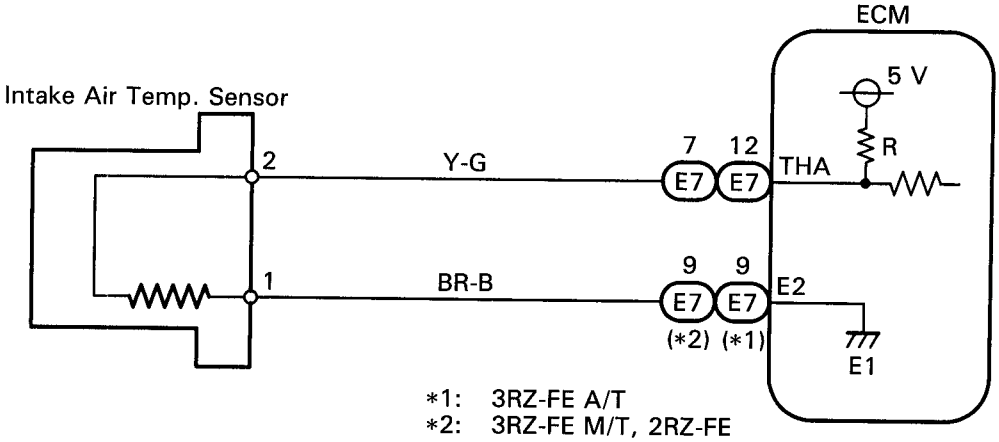

PI9561

INSPECTION PROCEDURE

HINT: If DTC "P0110" (intake air temp. circuit malfunction), "P0115" (engine coolant temp. circuit malfunction), "P0120" (throttle/pedal position sensor/switch "A" circuit malfunction) are output simultaneously, E2 (sensor ground) may be open.

1 **Connect the OBD II scan tool or TOYOTA hand-held tester, and read value of intake air temperature.**

P (1) Connect the OBD II scan tool or TOYOTA hand-held tester to the DLC3.
(2) Turn ignition switch ON and OBD II scan tool or TOYOTA hand-held tester main switch ON.

C Read temperature value on the OBD II scan tool or TOYOTA hand-held tester.

OK **Same as actual intake air temperature.**

HINT: If there is open circuit, OBD II scan tool or TOYOTA hand-held tester indicates −40°C (−40°F). If there is short circuit, OBD II scan tool or TOYOTA hand-held tester indicates 140°C (284°F) or more.

OK → **Check for intermittent problems (See page EG-196).**

NG → **−40°C (−40°F)···Go to step 2 . 140°C (284°F) or more···Go to step 4 .**

2 **Check for open in harness or ECM.**

ON

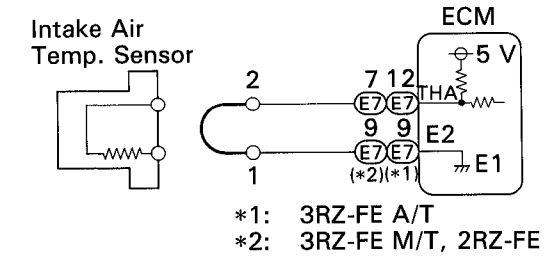

*1: 3RZ-FE A/T
*2: 3RZ-FE M/T, 2RZ-FE

BE6653
P19555

P (1) Disconnect the intake air temp. sensor connector.
(2) Connect sensor wire harness terminals together.
(3) Turn ignition switch ON.

C Read temperature value on the OBD II scan tool or TOYOTA hand-held tester.

OK **Temperature value: 140°C (284°F) or more**

NG → **Confirm good connection at sensor. If OK, replace intake air temp. sensor.**

OK → **Go to step 3 .**

3 Check for open in harness or ECM.

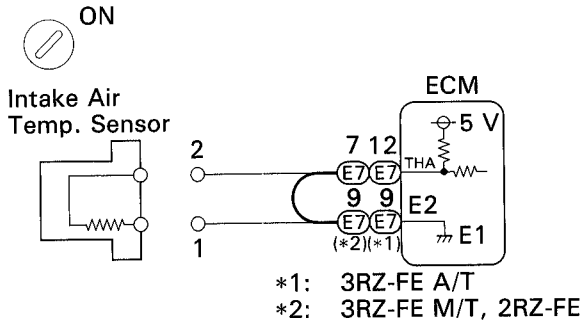

P (1) Remove glove compartment (See page EG-157).
(2) Connect between terminals THA and E2 of ECM connector.

HINT: Intake air temp. sensor connector is disconnected. Before checking, do a visual and contact pressure check for the ECM connector. (See page IN-24).

(3) Turn ignition switch ON.

C Read temperature value on the OBD II scan tool or TOYOTA hand-held tester.

OK **Temperature value: 140°C (284°F) or more**

For 3RZ-FE M/T, 2RZ-FE

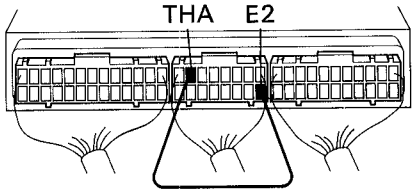

For 3RZ-FE A/T

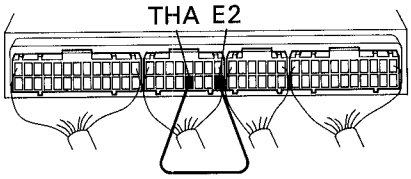

BE6653
P19553
P19698
P19673

NG → **OK** → **Open in harness between terminals E2 or THA, repair or replace harness.**

Confirm good connection at ECM. If OK, replace ECM.

4 Check for short in harness and ECM.

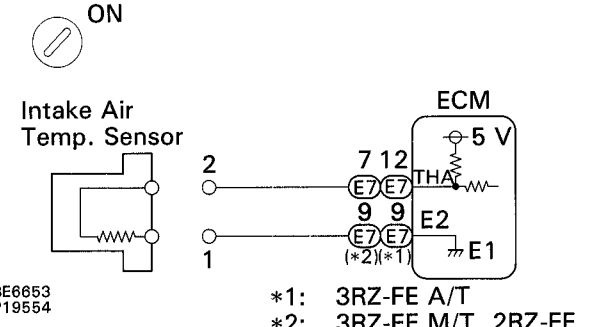

BE6653
P19554

P (1) Disconnect the intake air temp. sensor connector.
(2) Turn ignition switch ON.

C Read temperature value on the OBD II scan tool or TOYOTA hand-held tester.

OK **Temperature value: −40°C (−40°F)**

NG → **OK** → **Replace intake air temp. sensor.**

5 **Check for short in harness or ECM.**

ON

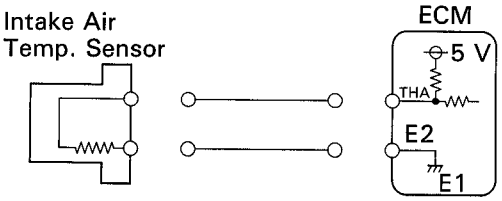

P (1) Remove glove compartment (See page EG-157).
(2) Disconnect the (E7) connector of ECM.
HINT: Intake air temp. sensor connector is disconcected.
(3) Turn ignition switch ON.

C Read temperature value on the OBD II scan tool or TOYOTA hand-held tester.

OK **Temperature value: −40°C (−40°F)**

For 3RZ-FE M/T, 2RZ-FE

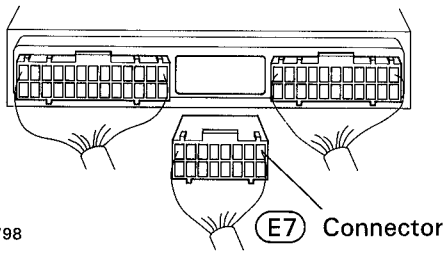

BE6653
FI7056
P19785 P19798

For 3RZ-FE A/T

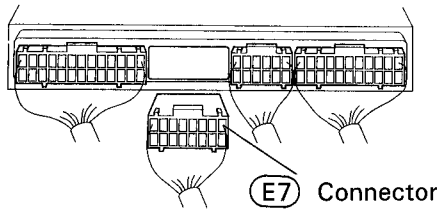

NG

OK **Repair or replace harness or connector.**

Check and replace ECM (See page IN-29).

DTC P0115 Engine Coolant Temp. Circuit Malfunction

CIRCUIT DESCRIPTION

A thermistor built into the engine coolant temperature sensor changes the resistance value according to the engine coolant temperature.
The structure of the sensor and connection to the ECM is the same as in the intake air temp. circuit malfunction shown on page EG-212.
If the ECM detects the DTC P0115, it operates the fail safe function in which the engine coolant temp. is assumed to be 80°C (176°F).

DTC No.	DTC Detecting Condition	Trouble Area
P0115	Open or short in engine coolant temp. sensor circuit	• Open or short in engine coolant temp. sensor circuit • Engine coolant temp. sensor • ECM

HINT: After confirming DTC P0115 use the OBD II scan tool or TOYOTA hand-held tester to confirm the engine coolant temperature from "CURRENT DATA".

Temperature Displayed	Malfunction
−40°C (−40°F)	Open circuit
140°(284°F) or more	Short circuit

WIRING DIAGRAM

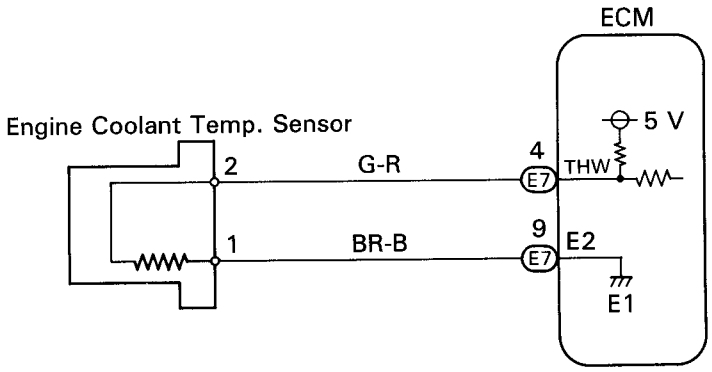

FI6448

INSPECTION PROCEDURE

HINT: If DTC "P0110" (intake air temp. circuit malfunction), "P0115" (engine coolant temp. circuit malfunction), "P0120" (throttle/pedal position sensor/switch "A" circuit malfunction) are output simultaneously, E2 (sensor ground) may be open.

1 Connect the OBD II scan tool or TOYOTA hand-held tester, and read value of engine coolant temperature.

P (1) Connect the OBD II scan tool or TOYOTA hand-held tester to the DLC3.
(2) Turn ignition switch ON and OBD II scan tool or TOYOTA hand-held tester main switch ON.

C Read temperature value on the OBD II scan tool or TOYOTA hand-held tester.

OK **Same as actual engine coolant temperature.**

HINT: If there is open circuit, OBD II scan tool or TOYOTA hand-held tester indicates −40°C (−40°F).
If there is short circuit, OBD II scan tool or TOYOTA hand-held tester indicates 140°C (284°F) or more.

OK

NG → **−40°C (−40°F)···Go to step 2 .**
140°C (284°F)or more···Go to step 4 .

Check for intermittent problems (See page EG-196).

2 Check for open in harness or ECM.

ON

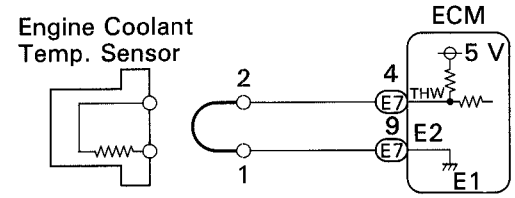

BE6653
FI7055

P (1) Disconnect the engine coolant temp. sensor connector.
(2) Connect sensor wire harness terminals together.
(3) Turn ignition switch ON.

C Read temperature value on the OBD II scan tool or TOYOTA hand-held tester.

OK **Temperature value: 140°C (284°F) or more**

NG

OK → **Confirm good connection at sensor. If OK, replace engine coolant temp. sensor.**

3 Check for open in harness or ECM.

ON

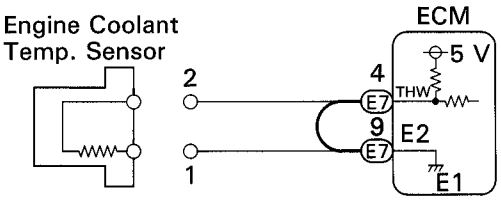

For 3RZ-FE M/T, 2RZ-FE

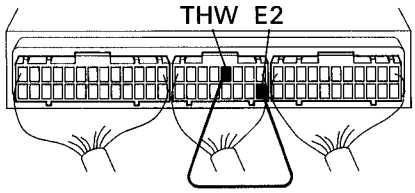

For 3RZ-FE A/T

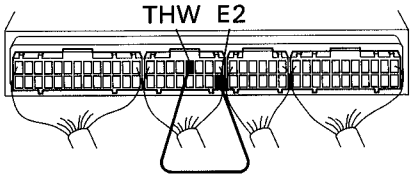

BE6653
FI7057
P19699
P19674

P (1) Remove glove compartment (See page EG-157).
(2) Connect between terminals THW and E2 of ECM connector.

HINT: Engine coolant temp. sensor connector is disconnected. Before checking, do a visual and contact pressure check for the ECM connector (See page IN-24).

(3) Turn ignition switch ON.

C Read temperature value on the OBD II scan tool or TOYOTA hand-held tester.

OK **Temperature value: 140°C (284°F) or more**

NG

OK → **Open in harness between terminals E2 or THW, repair or replace harness.**

Confirm good connection at ECM. If OK, replace ECM.

4 Check for short in harness and ECM.

ON

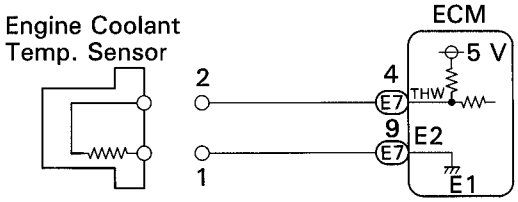

BE6653
FI7054

P (1) Disconnect the engine coolant temp. sensor connector.
(2) Turn ignition switch ON.

C Read temperature value on the OBD II scan tool or TOYOTA hand-held tester.

OK **Temperature value: −40°C (−40°F)**

NG

OK → **Replace engine coolant temp. sensor.**

5	Check for short in harness or ECM.

ON

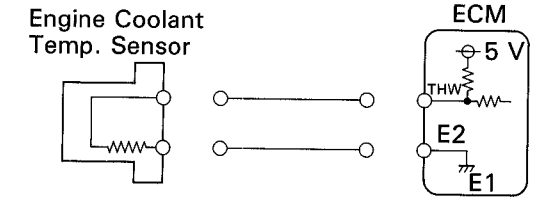

P (1) Remove glove compartment (See page EG-157).
(2) Disconnect the (E7) connector of ECM.

HINT: Engine coolant temp. sensor connector is disconnected.

(3) Turn ignition swith ON.

C Read temperature value on the OBD II scan tool or TOYOTA hand-held tester.

OK **Temperature value: −40°C (−40°F)**

For 3RZ-FE M/T, 2RZ-FE

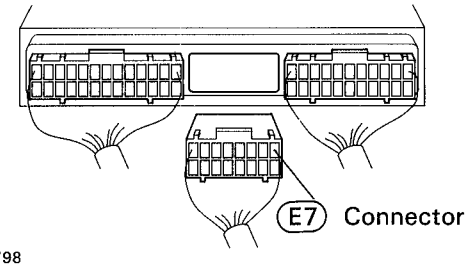

BE6653
FI7056
P19785 P19798

For 3RZ-FE A/T

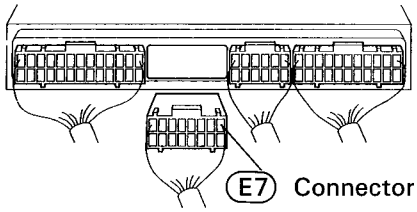

NG

Check and replace ECM (See page IN-29).

OK

Repair or replace harness or connector.

DTC P0116 Engine Coolant Temp. Circuit Range/ Performance Problem

CIRCUIT DESCRIPTION

Refer to "Engine Coolant Temp. Circuit Malfunction" on page EG-215.

DTC No.	DTC Detecting Condition	Trouble Area
P0116	20 min. or more after starting engine, engine coolant temp. sensor value is 32°C (90°F) or less (2 trip detection logic)	• Engine coolant temp. sensor • Cooling system

INSPECTION PROCEDURE

HINT: If DTC "P0115" (engine coolant temp. circuit malfunction) and "P0116" (engine coolant temp. circuit range/performance) are output simultaneously, engine coolant temp. sensor circuit may be open. Troubleshoot of DTC P0115 first.

1	Are there any other codes (besides DTC P0116) being output?

NO

Replace engine coolant temp. sensor (See page EG-148).

YES

Go to relevant DTC chart.

DTC P0120 Throttle/Pedal Position Sensor/Switch "A" Circuit Malfunction

CIRCUIT DESCRIPTION

The throttle position sensor is mounted in the throttle body and detects the throttle valve opening angle. When the throttle valve is fully closed, the IDL contacts in the throttle position sensor are on, so the voltage at the terminal IDL of the ECM becomes 0 V. At this time, a voltage of approximately 0.3 — 0.8 V is applied to terminal VTA of the ECM. When the throttle valve is opened, the IDL contacts go off and thus the power source voltage of approximately 12 V in the ECM is applied to the terminal IDL of the ECM. The voltage applied to the terminal VTA of the ECM increases in proportion to the opening angle of the throttle valve and becomes approximately 3.2 — 4.9 V when the throttle valve is fully opened. The ECM judges the vehicle driving conditions from these signals input from terminals VTA and IDL, and uses them as one of the conditions for deciding the air-fuel ratio correction, power increase correction and fuel-cut control etc.

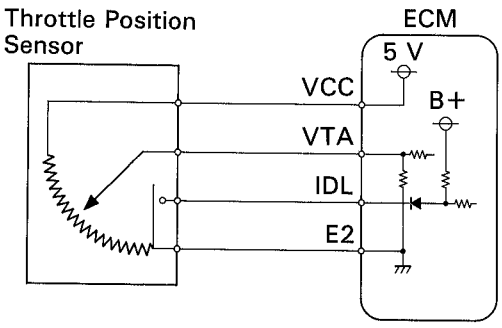

FI6571

DTC No.	DTC Detecting Condition	Trouble Area
P0120	Condition (a) or (b) continues (a) VTA < 0.1 V, and closed throttle position switch is OFF (b) VTA > 4.9 V	• Open or short in throttle position sensor circuit • Throttle position sensor • ECM

HINT:
- If there is open circuit in IDL line, DTC P0120 does not indicate.
- After confirming DTC P0120 use the OBD II scan tool or TOYOTA hand-held tester to confirm the throttle valve opening percentage and closed throttle position switch condition.

Throttle valve opening position expressed as percentage		Trouble Area
Throttle valve fully closed	Throttle valve fully open	
0 %	0 %	VCC line open VTA line open or short
100 %	100 %	E2 line open

WIRING DIAGRAM

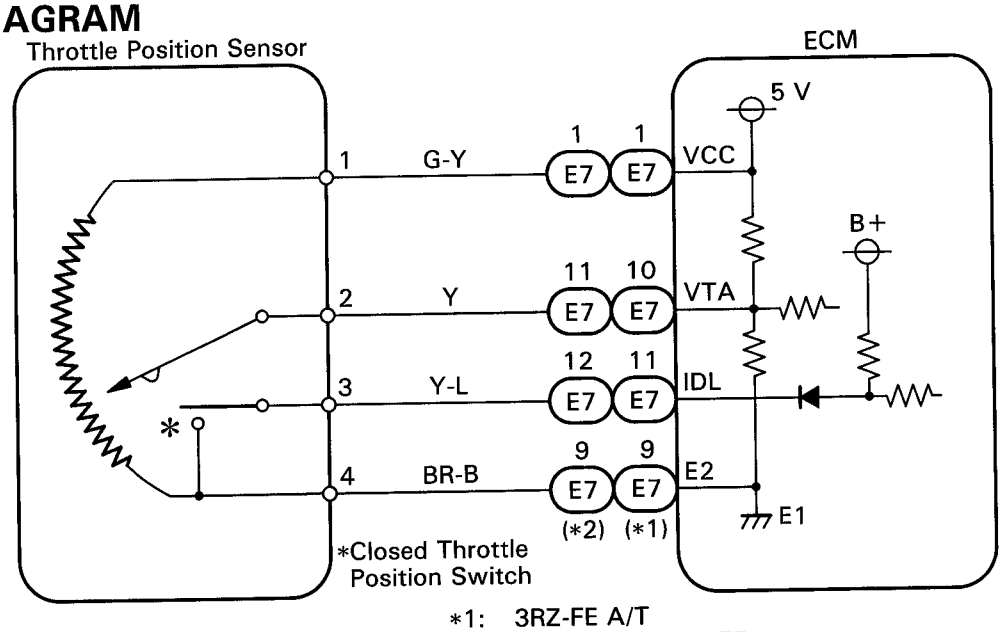

P19610

*1: 3RZ-FE A/T
*2: 3RZ-FE M/T, 2RZ-FE

INSPECTION PROCEDURE

HINT: If DTC P0110, P0115 and P0120 are output simultaneously, E2 (sensor ground) may be open.

1 Connect the OBD II scan tool or TOYOTA hand-held tester and read the throttle valve opening percentage.

P (1) Connect the OBD II scan tool or TOYOTA hand-held tester to the DLC3.
(2) Turn ignition switch ON and OBD II scan tool or TOYOTA hand-held tester main switch ON.

C Read the throttle valve opening percentage.

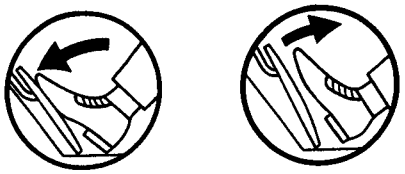

FI7052

OK

Throttle valve	Throttle valve opening position expressed as percentage
Fully open	Approx. 75%
Fully closed	Approx. 10%

NG → **OK** → **Check for intermittent problems (See page EG-196).**

2 Check voltage between terminal VCC of wire harness side connector and body ground.

ON

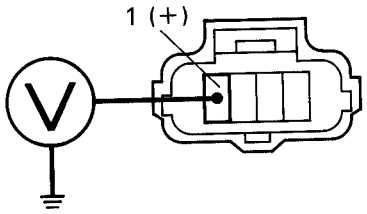

BE6653
P23808

P (1) Disconnect the throttle position sensor connector.
(2) Turn ignition switch ON.

C Measure voltage between terminal VCC of wire harness side connector and body ground.

OK Voltage: 4.5 – 5.5 V

OK → **NG** → **Go to step 5 .**

3 Check throttle position sensor.

P Disconnect the throttle position sensor connector.

C Measure resistance between terminals 1, 2 and 4 of throttle position sensor.

Throttle Position Sensor

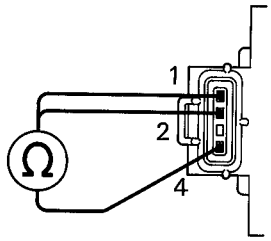

P23809

OK

Terminals	Throttle valve	Resistance
1 – 4	—	2.5 – 5.9 kΩ
2 – 4	Fully closed	0.2 – 5.7 kΩ
	Fully open	2.0 – 10.2 kΩ

NG → **Replace throttle position sensor.**

4 Check voltage between terminals VTA and E2 of ECM connector.

ON

P (1) Remove glove compartment (See page EG-157).
(2) Turn ignition switch ON.

C Measure voltage between terminals VTA and E2 of ECM connector.

For 3RZ-FE M/T, 2RZ-FE

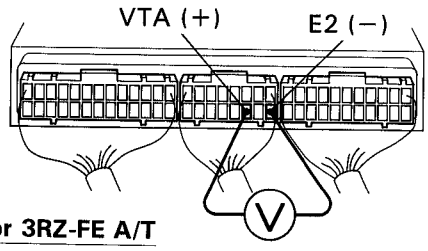

For 3RZ-FE A/T

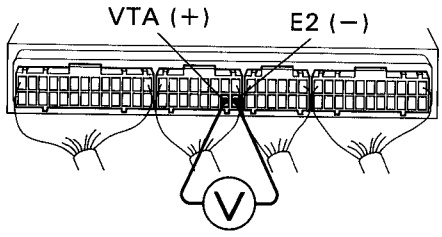

BE6653
P23810
P23811

OK

Throttle valve	Voltage
Fully closed	0.3 – 0.8 V
Fully open	2.7 – 5.2 V

NG → **Check for open and short in harness and connector between ECM and throttle position sensor (VTA line) (See page IN-24).**

Check and replace ECM (See page IN-29).

5	Check voltage between terminals VCC and E2 of ECM connector.

ON

For 3RZ-FE M/T, 2RZ-FE

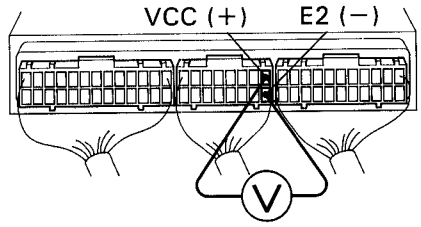

For 3RZ-FE A/T

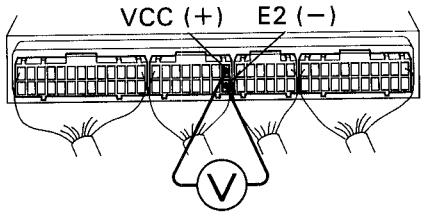

BE6653
P23812
P23813

P (1) Remove glove compartment (See page EG-157).
(2) Turn ignition switch ON.

C Measure voltage between terminals VCC and E2 of ECM connector.

OK **Voltage: 4.5 – 5.5 V**

OK →

NG → **Check and replace ECM (See page IN-29).**

Check for open in harness and connector between ECM and sensor (VCC line) (See page IN-24).

DTC P0121 Throttle/Pedal Position Sensor/Switch "A" Circuit Range/Performance Problem

CIRCUIT DESCRIPTION

Refer to "Throttle/Pedal Position Sensor/Switch "A" Circuit Malfunction" on page EG-219.

DTC No.	DTC Detecting Condition	Trouble Area
P0121	When closed throttle position switch is ON, condition (a) continues (2 trip detection logic) (a) VTA > 2.0 V	• Throttle position sensor

INSPECTION PROCEDURE

1	Are there any other codes (besides DTC P0121) being output?

NO →

YES → **Go to relevant DTC chart.**

Replace throttle position sensor.

DTC P0125 Insufficient Coolant Temp. for Closed Loop Fuel Control

CIRCUIT DESCRIPTION

To obtain a high purification rate for the CO, HC and NOx components of the exhaust gas, a three-way catalytic converter is used, but for the most efficient use of the three-way catalytic converter, the air-fuel ratio must be precisely controlled so that it is always close to the stoichiometric air-fuel ratio.

The oxygen sensor has the characteristic whereby its output voltage changes suddenly in the vicinity of the stoichiometric air-fuel ratio. This characteristic is used to detect the oxygen concentration in the exhaust gas and provide feedback to the computer for control of the air-fuel ratio.

When the air-fuel ratio becomes LEAN, the oxygen concentration in the exhaust increases and the oxygen sensor informs the ECM of the LEAN condition (small electromotive force: 0 V).

When the air-fuel ratio is RICHER than the stoichiometric air-fuel ratio the oxygen concentration in the exhaust gas is reduced and the oxygen sensor informs the ECM of the RICH condition (large electromotive force: 1 V).

The ECM judges by the electromotive force from the oxygen sensor whether the air-fuel ratio is RICH or LEAN and controls the injection time accordingly. However, if malfunction of the oxygen sensor causes output of abnormal electromotive force, the ECM is unable to perform accurate air-fuel ratio control.

The main heated oxygen sensors include a heater which heats the Zirconia element. The heater is controlled by the ECM. When the intake air volume is low (the temperature of the exhaust gas is low) current flows to the heater to heat the sensor for accurate oxygen concentration detection.

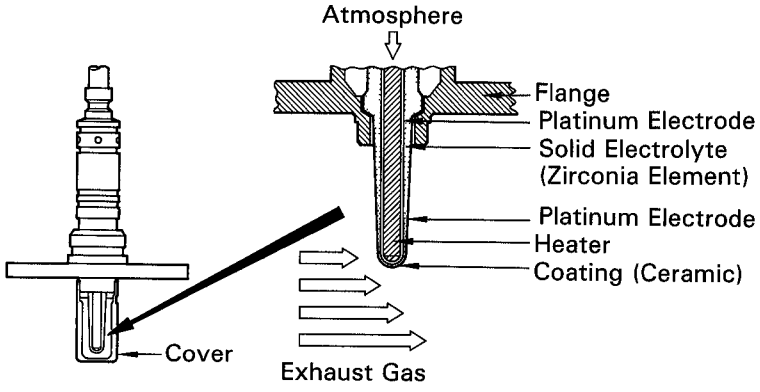

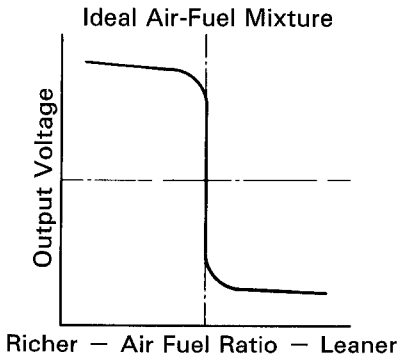

P21242
FI7210

DTC No.	DTC Detecting Condition	Trouble Area
P0125	After the engine is warmed up, heated oxygen sensor output does not indicate RICH even once when conditions (a), (b) and (c) continue for at least 1.5 minutes (a) Engine speed: 1,500 rpm or more (b) Vehicle speed: 40 ~ 100 km/h (25 ~ 62 mph) (c) Closed throttle position switch: OFF (d) 140 sec. or more after starting engine	• Open or short in heated oxygen sensor circuit • Heated oxygen sensor

HINT: After confirming DTC P0125 use the OBD II scan tool or TOYOTA hand-held tester to confirm voltage output of heated oxygen sensor from "CURRENT DATA".
If voltage output of heated oxygen sensor is 0 V, heated oxygen sensor circuit may be open or short.

WIRING DIAGRAM

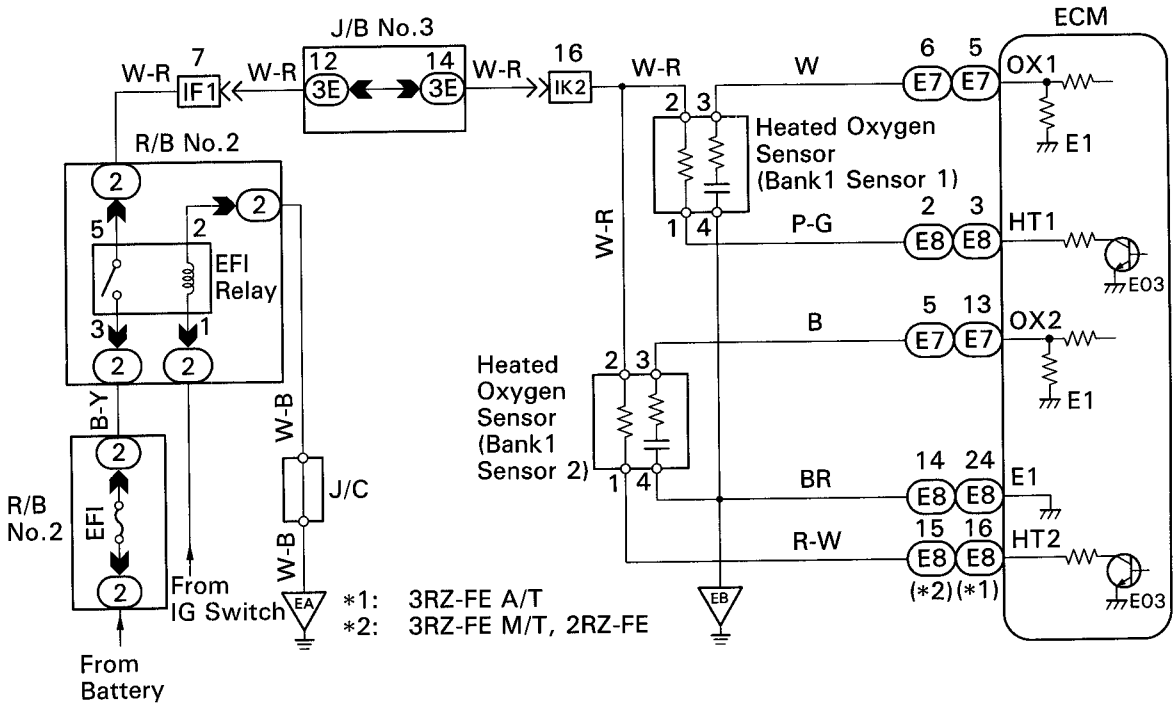

P23409

INSPECTION PROCEDURE

1 **Connect the OBD II scan tool or TOYOTA hand-held tester and read value for voltage output of heated oxygen sensor.**

P (1) Connect the OBD II scan tool or TOYOTA hand-held tester to the DLC3.
(2) Warm up engine to normal operating temperature.

C Read voltage output of heated oxygen sensor (bank 1 sensor 1) when engine is suddenly raced.

HINT: Perform quick racing to 4,000 rpm 3 times using accelerator pedal.

OK **Heated oxygen sensor output a RICH signal (0.45 V or more) at least once.**

NG

OK → **Check and replace ECM (See page IN-29).**

2 **Check for open and short in harness and connector between ECM and heated oxygen sensor (See page IN-24).**

OK

NG → **Repair or replace harness or connector.**

Replace heated oxygen sensor.

DTC P0130 Heated Oxygen Sensor Circuit Malfunction (Bank 1 Sensor 1)

CIRCUIT DESCRIPTION

Refer to "Insufficient Coolant Temp. for Closed Loop Fuel Control" on page EG-223.

DTC No.	DTC Detecting Condition	Trouble Area
P0130	Voltage output of heated oxygen sensor remains at 0.4 V or more or 0.55 V or less, during idling after the engine is warmed up (2 trip detection logic)	• Heated oxygen sensor • Fuel trin malfunction

HINT: Sensor 1 refers to the sensor closer to the engine body.

The heated oxygen sensor's output voltage and the short-term fuel trim value can be read using the OBD II scan tool or TOYOTA hand-held tester.

WIRING DIAGRAM

Refer to page EG-224 for the WIRING DIAGRAM.

CONFIRMATION DRIVING PATTERN

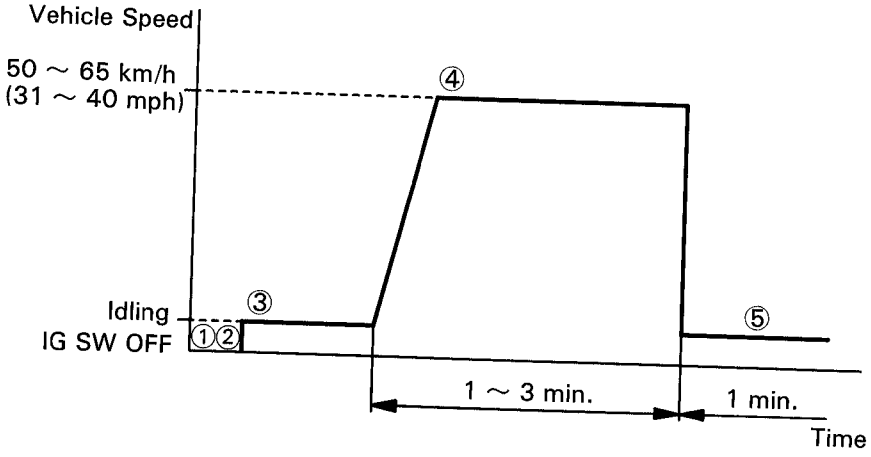

FI7130

① Connect the TOYOTA hand-held tester to the DLC3.
② Switch the TOYOTA hand-held tester from normal mode to check mode (See page EG-191).
③ Start the engine and warm it up with all accessory switches OFF.
④ Drive the vehicle at 50 ~ 65 km/h (31 ~ 40mph) for 1 ~ 3 minutes to warm up the heated oxygen sensor.
⑤ Let the engine idle for 1 minute.

HINT: If a malfunction exists, the MIL will light up during step ⑤.

NOTICE: If the conditions in this test are not strictly followed, detection of the malfunction will not be possible.

If you do not have a TOYOTA hand-held tester, turn the ignition switch OFF after performing steps ③ to ⑤, then perform steps ③ to ⑤ again.

INSPECTION PROCEDURE

1 **Check for open and short in harness and connector between ECM and heated oxygen sensor (See page IN-24).**

OK → **2**

NG → **Repair or replace harness or connector.**

EG

2 **Check for heated oxygen sensor data.**

P (1) Connect the OBD II scan tool or TOYOTA hand-held tester to the DLC3.
(2) Warm up engine to normal operating temperature.

C Read the heated oxygen sensor output voltage and short-term fuel trim.

Result

Pattern	Heated oxygen sensor output voltage	Short-term fuel trim
①	Lean condition (Changes at 0.55 V or less)	Changes at about +20%
②	Rich condition (Changes at 0.4 V or more)	Changes at about −20%
③	Except ① and ②	

③ → **3**

①,② → **Check fuel trim system (See page EG-230).**

3 **Check the output voltage of heated oxygen sensor during idling.**

P Warm up the heated oxygen sensor with the engine at 2,500 rpm for approx. 90 sec.

C Use the OBD II scan tool or TOYOTA hand-held tester read the output voltage of the heated oxygen sensor during idling.

OK **Heated oxygen sensor output voltage:**
Alternates repeatedly between less than 0.4 V and more than 0.55 V (See the following table).

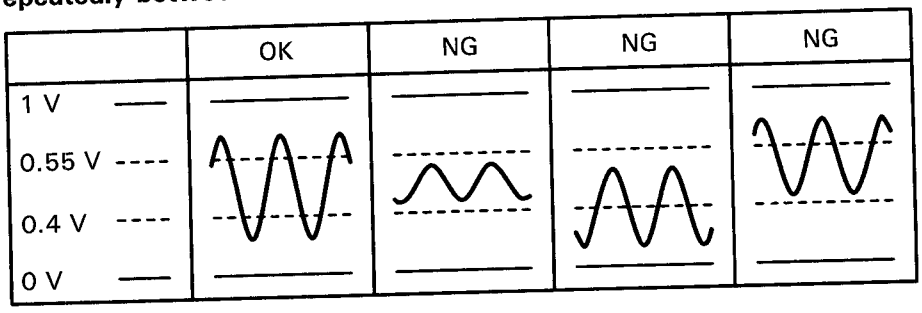

T

P18349

NG → **Replace heated oxygen sensor.**

OK → **Perform confirmation driving pattern (See page EG-225).**

DTC P0133 Heated Oxygen Sensor Circuit Slow Response (Bank 1 Sensor 1)

CIRCUIT DESCRIPTION

Refer to "Insufficient Coolant Temp. for Closed Loop Fuel Control" on page EG-223.

DTC No.	DTC Detecting Condition	Trouble Area
P0133	Response time for the heated oxygen sensor's voltage output to change from rich to lean, or from lean to rich, is 1 sec. or more during idling after the engine is warmed up (2 trip detection logic)	• Heated oxygen sensor

HINT: Sensor 1 refers to the sensor closer to the engine body.

INSPECTION PROCEDURE

1 Are there any other codes (besides DTC P0133) being output?

NO → Replace heated oxygen sensor.

YES → Go to relevant DTC chart.

DTC P0135 Heated Oxygen Sensor Heater Circuit Malfunction (Bank 1 Sensor 1)

DTC P0141 Heated Oxygen Sensor Heater Circuit Malfunction (Bank 1 Sensor 2)

CIRCUIT DESCRIPTION

Refer to "Insufficient Coolant Temp. for Closed Loop Fuel Control" on page EG-223.

DTC No.	DTC Detecting Condition	Trouble Area
P0135 P0141	When the heater operates, heater current exceeds 2 A or voltage drop for the heater circuit exceeds 5 V. (2 trip detection logic)	• Open or short in heater circuit of heated oxygen sensor • Heated oxygen sensor heater • ECM
	Heater current of 0.25 A or less when the heater operates. (2 trip detection logic)	

HINT: Sensor 1 refers to the sensor closer to the engine body.
Sensor 2 refers to the sensor farther away from the engine body.

WIRING DIAGRAM

Refer to page EG-224 for the WIRING DIAGRAM.

INSPECTION PROCEDURE

1 **Check voltage between terminals HT1, HT2 of ECM connector and body ground.**

ON

For 3RZ-FE M/T, 2RZ-FE

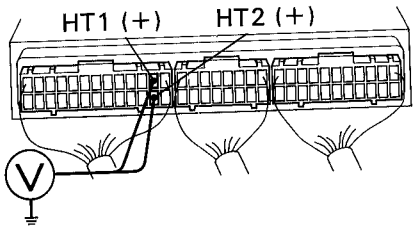

For 3RZ-FE A/T

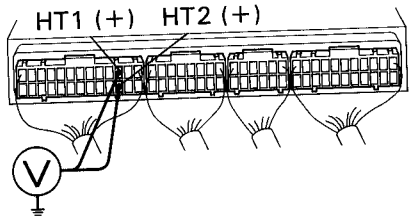

BE6653
P23814
P23815

P (1) Remove glove compartment (See page EG-157).
(2) Turn ignition switch ON.

C Measure voltage between terrminals HT1, HT2 of ECM connector and body ground.

HINT: Connect terminal HT1 to bank 1 sensor 1.
Connect terminal HT2 to bank 1 sensor 2.

OK **Voltage: 9 – 14 V**

NG → **OK** → **Check and replace ECM (See page IN-29).**

2 **Check resistance of heated oxygen sensor heater.**

OK → **NG** → **Replace heated oxygen sensor.**

Check and repair harness or connector between EFI relay and heated oxygen sensor and ECM.

DTC P0136 Heated Oxygen Sensor Circuit Malfunction (Bank 1 Sensor 2)

CIRCUIT DESCRIPTION

Refer to ''Insufficient Coolant Temp. for Closed Loop Fuel Control'' on page EG-223.

DTC No.	DTC Detecting Condition	Trouble Area
P0136	Voltage output of the heated oxygen sensor (bank 1 sensor 2) remains at 0.4 V or more or 0.5 V or less when the vehicle is driven at 50 km/h (31 mph) or more after the engine is warmed up. (2 trip detection logic)	• Heated oxygen sensor

HINT: Sensor 2 refers to the sensor farther away from the engine body.

WIRING DIAGRAM

Refer to page EG-224 for the WIRING DIAGRAM.

INSPECTION PROCEDURE

1 **Are there any other codes (besides DTC P0136) being output?**

NO

YES → **Go to relevant DTC chart.**

2 **Check for open and short in harness and connector between ECM and heated oxygen sensor (See page IN-24).**

OK

NG → **Repair or replace harness or connector.**

3 **Check the output voltage of heated oxygen sensor (bank 1 sensor 2).**

P (1) Connect the OBD II scan tool or TOYOTA hand-held tester to the DLC3.
(2) Warm up engine to normal operating temperature.

C Read voltage output of heated oxygen sensor (bank 1 sensor 2) when engine suddenly raced.

HINT: Perform quick racing to 4,000 rpm 3 mins. using accelerator pedal.

OK **Heated oxygen sensor output voltage: Alternates from 0.4 V or less to 0.5 V or more.**

NG

OK → **Check that each connector is properly connected.**

Replace heated oxygen sensor (bank 1 sensor 2).

DTC	P0171	System too Lean (Fuel Trim)

DTC	P0172	System too Rich (Fuel Trim)

CIRCUIT DESCRIPTION

"Fuel trim" refers to the feedback compensation value compared against the basic injection time. Fuel trim includes short-term fuel trim and long-term fuel trim.

"Short-term fuel trim" is the short-term fuel compensation used to maintain the air-fuel ratio at its ideal theoretical value. The signal from the heated oxygen sensor indicates whether the air-fuel ratio is RICH or LEAN compared to the ideal theoretical value, triggening a reduction in fuel volume if the air-fuel ratio is rich, and an increase in fuel volume if it is lean.

"Long-term fuel trim" is overall fuel compensation carried out long-term to compensate for continual deviation of the short-term fuel trim from the central value due to individual engine differences, wear over time and changes in the usage environment.

If both the short-term fuel trim and long-term fuel trim are LEAN or RICH beyond a certain value, it is detected as a malfunction and the MIL lights up.

DTC No.	DTC Detecting Condition	Trouble Area
P0171	When the air fuel ratio feedback is stable after engine warming up, the fuel trim is considerably in error on the RICH side. (2 trip detection logic)	• Air intake (hose loose) • Fuel line pressure • Injector blockage • Heated oxygen sensor malfunction • Mass air flow meter • Engine coolant temp. sensor
P0172	When the air fuel ratio feedback is stable after engine warming up, the fuel trim is considerably in error on the LEAN side. (2 trip detection logic)	• Fuel line pressure • Injector leak, blockage • Heated oxygen sensor malfunction • Mass air flow meter • Engine coolant temp. sensor

HINT:
- When DTC P0171 is recorded, the actual air-fuel ratio is on the LEAN side. When DTC P0172 is recorded, the actual air-fuel ratio is on the RICH side.
- If the vehicle runs out of fuel, the air-fuel ratio is LEAN and DTC P0171 is recorded. The MIL then comes on.
- If the total of the short-term fuel trim value and long-term fuel trim value is within ± 25 %, the system is functioning normally.

INSPECTION PROCEDURE

1 **Check air induction system (See page EG-119).**

OK

NG → **Repair or replace.**

2 **Check for heated oxygen sensor data.**

P (1) Connect the OBD II scan tool or TOYOTA hand-held tester to the DLC3.
(2) Warm up engine to normal operating temperature.

C Read the heated oxygen sensor output voltage and short-term fuel trim.

Result

Pattern	Heated oxygen sensor output voltage	Short-term fuel trim
①	Lean condition (Changes at 0.55 V or less)	Changes at about +20%
②	Rich condition (Changes at 0.4 V or more)	Changes at about −20%
③	Except ① and ②	

①,② → **3** **Check fuel pressure (See page EG-124).**

③ → **Check for heated oxygen sensor. (See page EG-225).**

3 **Check fuel pressure (See page EG-124).**

OK → **4** **Check injector injection.**

NG → **Check and repair fuel pump, pressure regulator, fuel pipe line and filter. (See page EG-126).**

4 **Check injector injection.**

OK → **5** **Check mass air flow meter and engine coolant temp. sensor (See page EG-208, 215).**

NG → **Replace injector.**

5 **Check mass air flow meter and engine coolant temp. sensor (See page EG-208, 215).**

OK → **6** **Check for spark and ignition (See page IG-2).**

NG → **Repair or replace.**

6 **Check for spark and ignition (See page IG-2).**

OK → **7** **Check the VSV for EVAP (See page EG-152).**

NG → **Repair or replace.**

7 **Check the VSV for EVAP (See page EG-152).**

OK → **Check and replace ECM (See page IN-29).**

NG → **Repair or replace.**

DTC	P0300	Random/Multiple Cylinder Misfire Detected
DTC	P0301	Cylinder 1 Misfire Detected
DTC	P0302	Cylinder 2 Misfire Detected
DTC	P0303	Cylinder 3 Misfire Detected
DTC	P0304	Cylinder 4 Misfire Detected

CIRCUIT DESCRIPTION

Misfire: The ECM uses the crankshaft position sensor and camshaft position sensor to monitor changes in the crankshaft rotation for each cylinder.
The ECM counts the number of times the engine speed change rate indicates that misfire has occurred. And when the misfire rate equals or exceeds the count indicating that the engine condition has deteriorated, the MIL lights up.
If the misfire rate is high enough and the driving conditions will cause catalyst overheating, the MIL blinks when misfiring occurs.

DTC No.	DTC Detecting Condition	Trouble Area
P0300	Misfiring of random cylinders is detected during any particular 200 or 1,000 revolutions	• Ignition system • Injector • Fuel line pressure • EGR • Compression pressure • Valve clearance not to specification • Valve timing • Mass air flow meter • Engine coolant temp. sensor
P0301 P0302 P0303 P0304	For any particular 200 revolutions of the engine, misfiring is detected which can cause catalyst overheating (This causes MIL to blink)	
	For any particular 1,000 revolutions of the engine, misfiring is detected which causes a deterioration in emissions (2 trip detection logic)	

HINT: When the 2 or more codes for a misfiring cylinder are recorded repeatedly but no Random Misfire code is recorded, it indicates that the misfires were detected and recorded at different times.

WIRING DIAGRAM

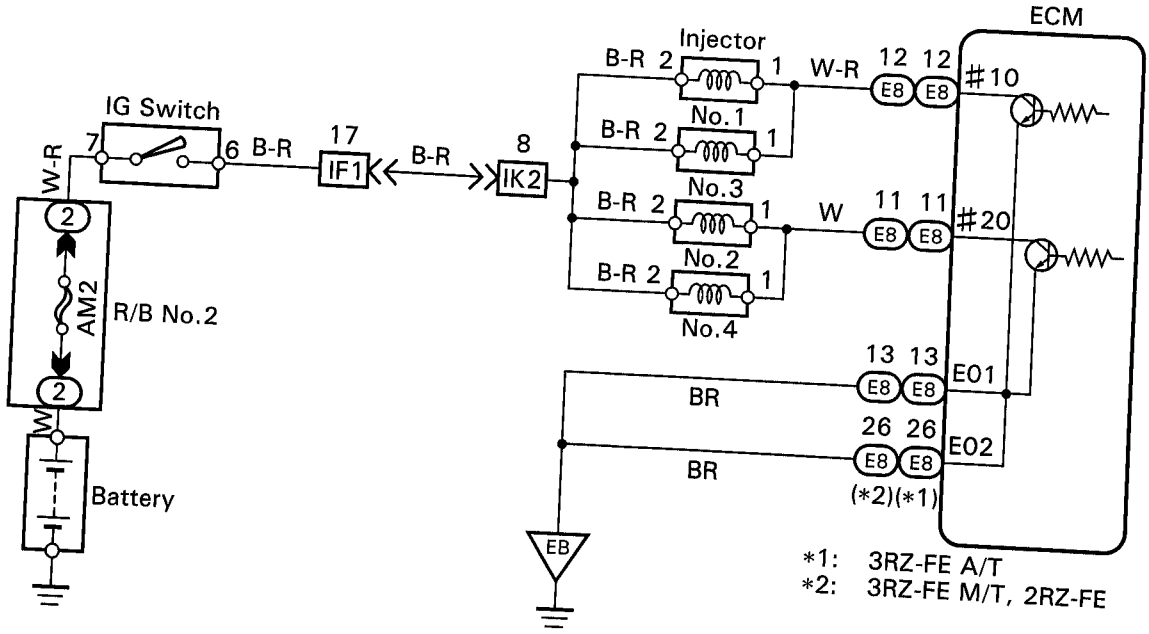

P23410

Reference INSPECTION USING OSCILLOSCOPE

INJECTOR SIGNAL WAVEFORM

- With the engine idling, measure between terminals #10, #20 and E01 of ECM.

HINT: The correct waveform is as shown.

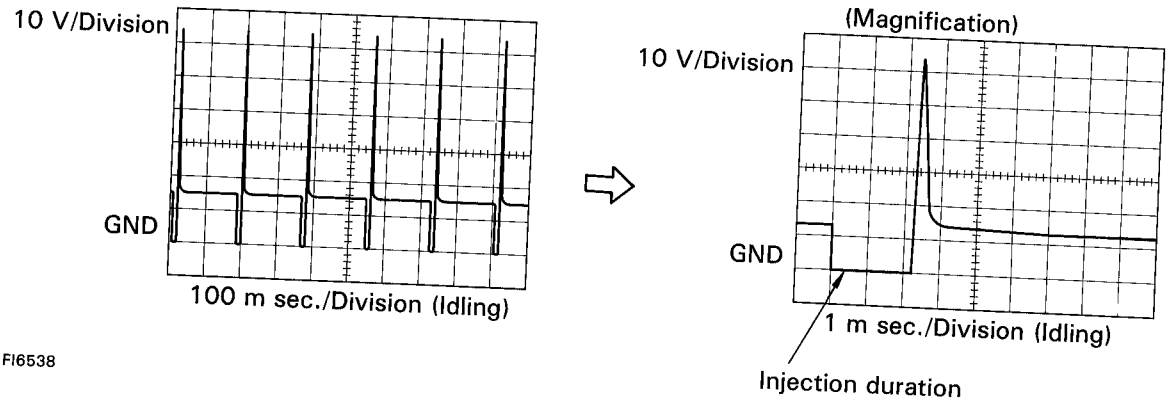

FI6588 FI6538

INSPECTION PROCEDURE

1 Check spark plug and spark of misfiring cylinder.

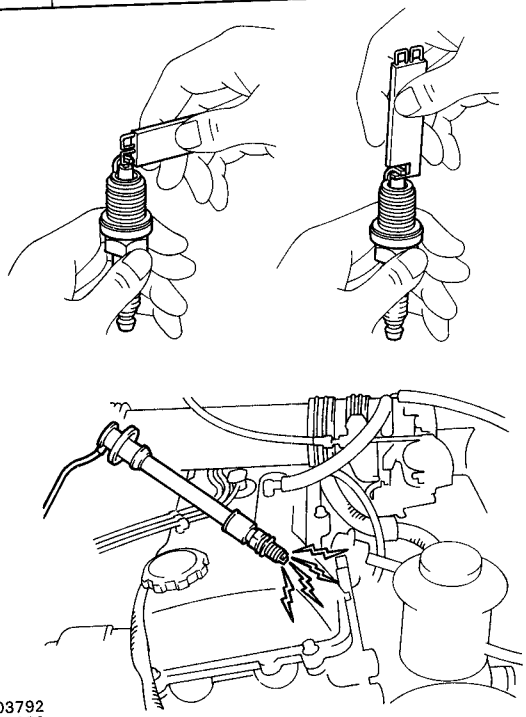

P03792
P25086

OK

P (1) Disconnect the high-tension cord.
(2) Remove spark plug.

C (1) Check the carbon deposits on electrode.
(2) Check electrode gap.

OK **(1) No large carbon deposit present.**
Not wet with gasoline or oil.
(2) Electrode gap: 0.8 mm (0.031 in.)

P (1) Install the spark plug to the ignition code.
(2) Disconnect injector connector.
(3) Ground the spark plug.

C Check if spark occurs while engine is being craked.

NOTICE: To prevent excess fuel being injected from the injectors during this test, don't crank the engine for more than 5 — 10 seconds at a time.

OK **Spark jumps across electrode gap.**

NG → **Replace or check ignition system (See page IG-2).**

2 Check voltage of ECM terminal for injector of failed cylinder.

ON

For 3RZ-FE M/T, 2RZ-FE

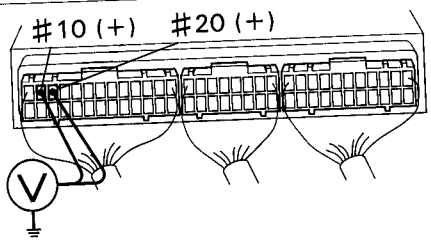

For 3RZ-FE A/T

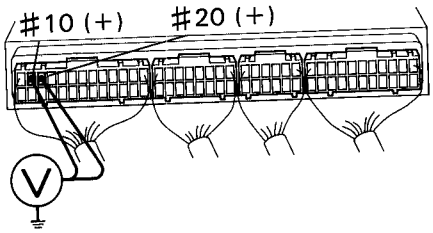

BE6653
P23816
P23817

NG

P (1) Remove glove compartment
(See page EG-157).
(2) Trun ignition switch ON.

C Measure voltage between applicable terminal of ECM connector and body ground.

OK **Voltage: 9 — 14 V**

OK → Go to step 4 .

3 Check injector of misfiring cylinder.

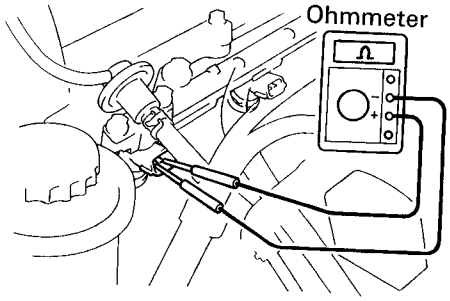

P25103

P Disconnect injector connector.

C Measure resistance of injector.

OK Resistance: At 20°C (68°F): 13.4 – 14.2 Ω

EG

OK

NG → Replace injector.

Check for open and short in harness and connector between injector ECM (See page IN-24).

4 Check fuel pressure (See page EG-124).

OK

NG → Check and repair fuel pump, pressure regulator, fuel pipe line and filter (See page EG-126).

5 Check injector injection (See page EG-132).

OK

NG → Replace injector.

6 Check EGR system (See page EG-115).

OK

NG → Repair EGR system.

7 Check mass air flow meter and engine coolant temp. sensor (See page EG-208, 215).

OK

NG → Repair or replace.

Check engine mechanical systems.
- Compression pressure (See page EG-7).
- Valve clearance (See page EG-8).
- Valve timing (See page EG-43).

DTC P0325 Knock Sensor 1 Circuit Malfunction

CIRCUIT DESCRIPTION

Knock sensor is fitted to the cylinder block to detect engine knocking. This sensor contains a piezoelectric element which generates a voltage when it becomes deformed, which occurs when the cylinder block vibrates due to knocking. If engine knocking occurs, ignition timing is retarded to suppress it.

DTC No.	DTC Detecting Condition	Trouble Area
P0325	No knock sensor 1 signal to ECM with engine speed 1,200 rpm or more	• Open or short in knock sensor 1 circuit • Knock sensor 1 (looseness) • ECM

If the ECM detects the above diagnosis conditions, it operates the fail safe function in which the corrective retard angle value is set to the maximum value.

WIRING DIAGRAM

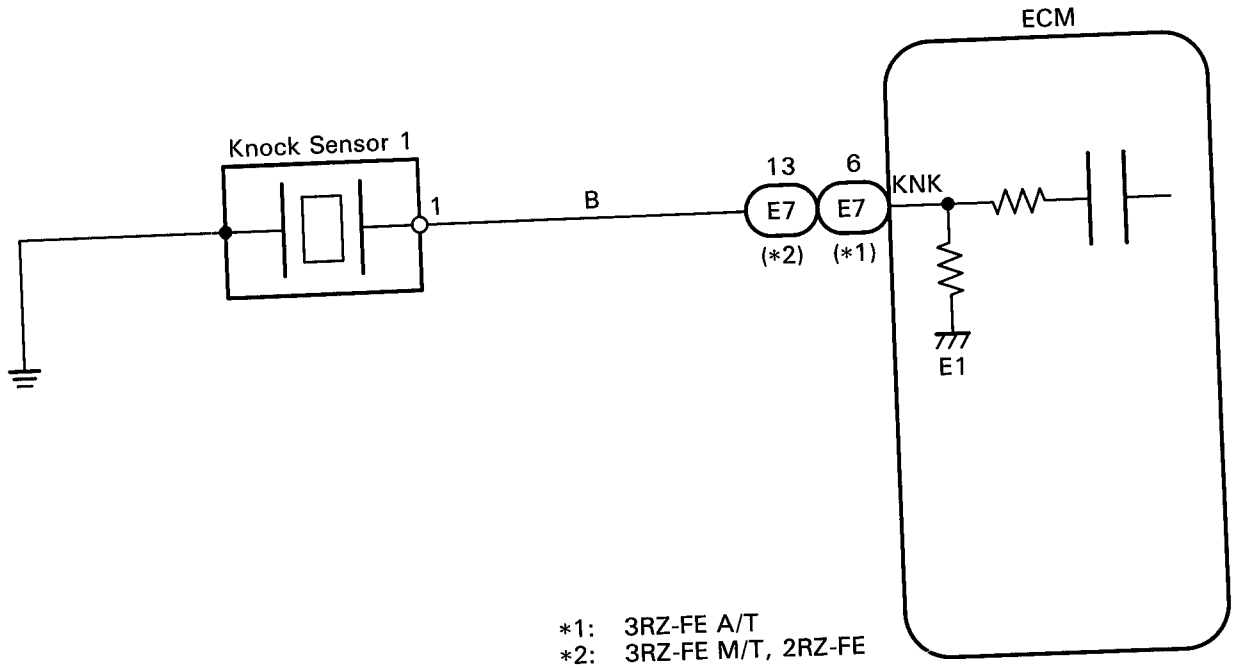

*1: 3RZ-FE A/T
*2: 3RZ-FE M/T, 2RZ-FE

P19613

INSPECTION PROCEDURE

1 Check continuity between terminal KNK of ECM connector and body ground.

LOCK

For 3RZ-FE M/T, 2RZ-FE

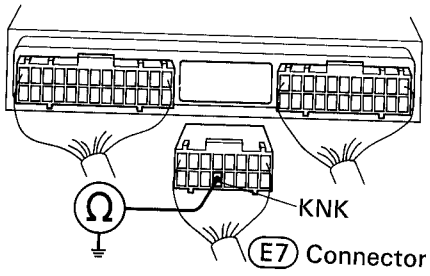

For 3RZ-FE A/T

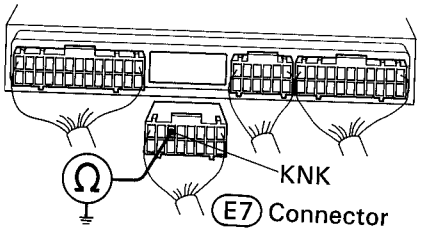

BE6653
P23818
P24201

P (1) Remove glove compartment (See page EG-157).
(2) Disconnect the (E7) connector of ECM.

C Measure resistance between terminal KNK of ECM connector and body ground.

OK Resistance: 1 MΩ or higher

EG

NG → OK: Go to step 3.

2 Check knock sensor (See page EG-151).

OK → NG: Replace knock sensor.

3 Check for open and short in harness and connector between ECM and knock sensor (See page IN-24).

OK → NG: Repair or replace harness or connctor.

4 Does malfunction disappear when a good knock sensor is installed?

NO → YES: Replace knock sensor.

Check and replace ECM (See page IN-29).

Reference INSPECTION USING OSCILLOSCOPE

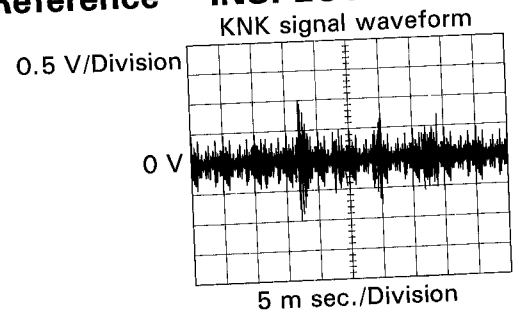

- With the engine racing (4,000 rpm) measure between terminal KNK of ECM and body ground.

HINT: The correct waveform is as shown.

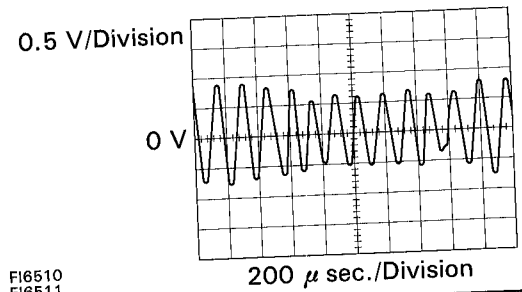

- Spread the time on the horizontal axis, and confirm that period of the wave is 151 μ sec. (Normal mode vibration frequency of knock sensor: 6.6 KHz).

HINT: If normal mode vibration frequency is not 6.6 kHz, the sensor is malfunctioning.

FI6510
FI6511

DTC P0335 Crankshaft Position Sensor "A" Circuit Malfunction

CIRCUIT DESCRIPTION

Crankshaft position sensor (NE signal) consist of a signal plate and pick up coil.
The NE signal plate has 34 teeth and is mounted on the crankshaft. The NE signal sensor generates 34 signals for every engine revolution. The ECM detects the standard crankshaft angle based on the G signals, and the actual crankshaft angle and the engine speed by the NE signals.

DTC No.	DTC Detecting Condition	Trouble Area
P0335	No crankshaft position sensor signal to ECM during cranking (2 trip detection logic)	• Open or short in crankshaft position sensor circuit • Crankshaft position sensor • Starter • ECM
	No crankshaft position sensor signal to ECM with engine speed 600 rpm or more (2 trip detection logic)	

WIRING DIAGRAM

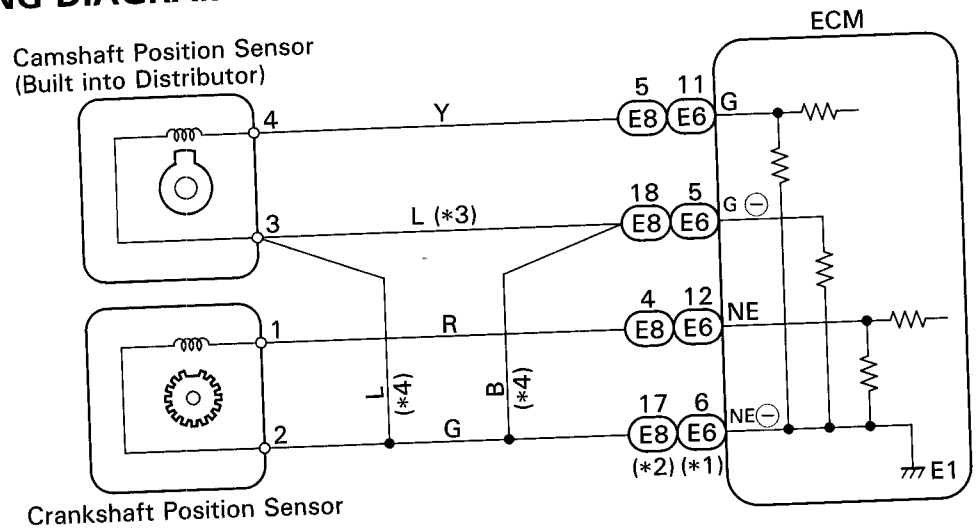

P25124

*1: 3RZ-FE A/T
*2: 3RZ-FE M/T, 2RZ-FE
*3: 3RZ-FE, 2RZ-FE M/T
*4: 2RZ-FE A/T

INSPECTION PROCEDURE

1 Check resistance of crankshaft position sensor (See page IG-6).

Reference INSPECTION USING OSCILLOSCOPE

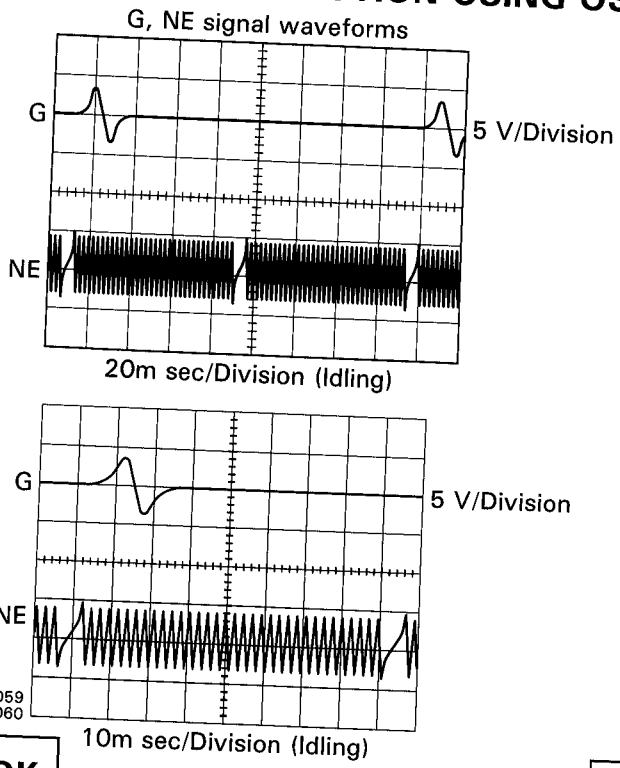

- During cranking or idling, check between terminals G and G⊖, NE and NE⊖ of ECM

  HINT: The correct waveforms are as shown.

EG

OK

NG → Replace crankshaft position sensor.

2 Check for open and short in harness and connector between ECM and crankshaft position sensor (See page IN-24).

OK

NG → Repair or replace harness or connector.

3 Inspect sensor installation and teeth of signal plate.

OK

NG → Tighten the sensor.
Replace signal plate.

Check and replace ECM (See page IN-29).

DTC P0336 Crankshaft Position Sensor "A" Circuit Range/Performance

CIRCUIT DESCRIPTION

Refer to "Crankshaft Position Sensor "A" Circuit Malfunction" on page EG-238.
If the ECM records the DTC P0336, it operates the fail safe function, stopping the fuel injection.

DTC No.	DTC Detecting Condition	Trouble Area
P0336	Deviation in crankshaft position sensor signal and camshaft position sensor signal	• Valve timing • Distributor installatioin • ECM

INSPECTION PROCEDURE

1 Check valve timing (See page EG-43).

OK

NG → Adjust valve timing.

2 Check distributor installation (See page IG-11).

OK

NG → Reinstall distributor.

Check and replace ECM (See page IN-29).

DTC P0340 Camshaft Position Sensor Circuit Malfunction

CIRCUIT DESCRIPTION

Camshaft position sensor (G signal) consist of a signal plate and pick up coil. The G signal plate has one tooth on its outer circumference and is built into the distributor.
When the camshafts rotate, the protrusion on the signal plate and the air gap on the pick up coil change, causing fluctuations in the magnetic field and generating an electromotive force in the pick up coil.
The NE signal plate has 34 teeth and is mounted on the crankshaft. The NE signal sensor generates 34 signals for every engine revolution. The ECM detects the standard crankshaft angle based on the G signals and the actual crankshaft angle and the engine speed by the NE signals.

DTC No.	DTC Detecting Condition	Trouble Area
P0340	No camshaft position sensor signal to ECM during cranking (2 trip detection logic)	• Open or short in camshaft position sensor circuit • Camshaft position sensor • Distributor • Starter • ECM
	No camshaft position sensor signal to ECM during engine running.	

WIRING DIAGRAM

Refer to page EG-238 for the WIRING DIAGRAM.

INSPECTION PROCEDURE

1 **Check resistance of camshaft position sensor (Signal generator) (See page IG-5).**

Reference INSPECTION USING OSCILLOSCOPE

G, NE signal waveforms

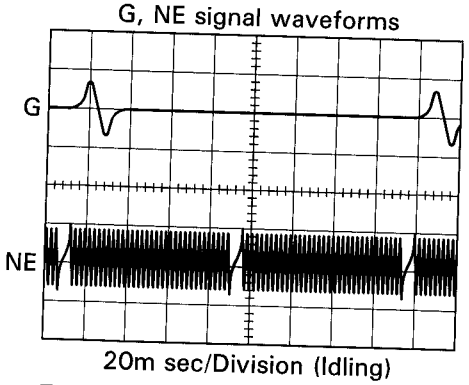

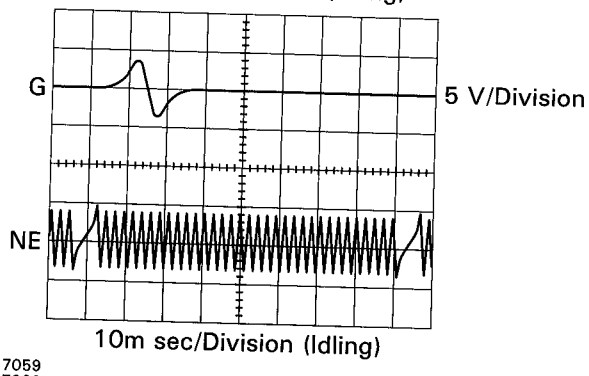

FI7059
FI7060

- During cranking or idling, check between terminals G and G⊖, NE and NE⊖ of ECM

HINT: The correct waveforms are as shown.

OK

NG → **Replace distributor housing.**

2	Check for open and short in harness and connector between ECM and distributor (See page IN-24).

OK → Check and replace ECM (See page IN-29).

NG → Repair or replace harness or connector.

3	Check air gap (See page IG-5).

OK → Check and replace ECM (See page IN-29).

NG → Replace distributor housing.

DTC P0401 Exhaust Gas Recirculation Flow Insufficient Detected

CIRCUIT DESCRIPTION

The EGR system recirculates exhaust gas, which is controlled to the proper quantity to suit the driving conditions, into the intake air mixture to slow down combustion, reduce the combustion temperature and reduce NOx emissions. The amount of EGR is regulated by the EGR vacuum modulator according to the engine load.

If even one of the following conditions is fulfilled, the VSV is turned ON by a signal from the ECM. This results in atmospheric air acting on the EGR valve, closing the EGR valve and shutting off the exhaust gas (EGR cut-off).

Under the following conditions, EGR is cut to maintain driveability.

- Before the engine is warmed up.
- During deceleration (throttle valve closed).
- Light engine load (amount of intake air very small).
- Engine racing.

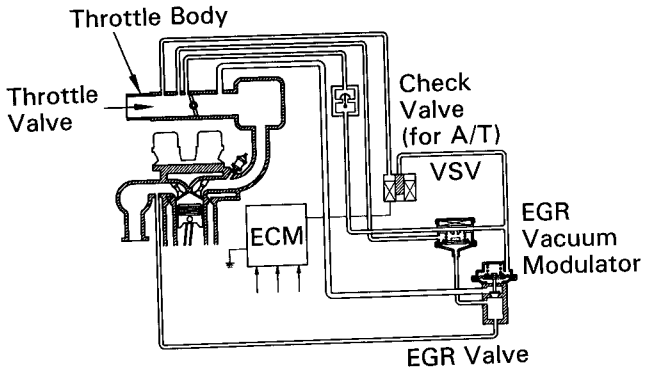

P19893

DTC No.	DTC Detecting Condition	Trouble Area
P0401	After the engine is warmed up and run at 80 km/h (50 mph) for 3 to 5 minutes, small difference between value of EGR gas temp. sensor and ambient air temperature (2 trip detection logic)	• EGR valve stuck closed • Short in VSV circuit for EGR • Open in EGR gas temp. sensor circuit • EGR hose disconnected • ECM

WIRING DIAGRAM

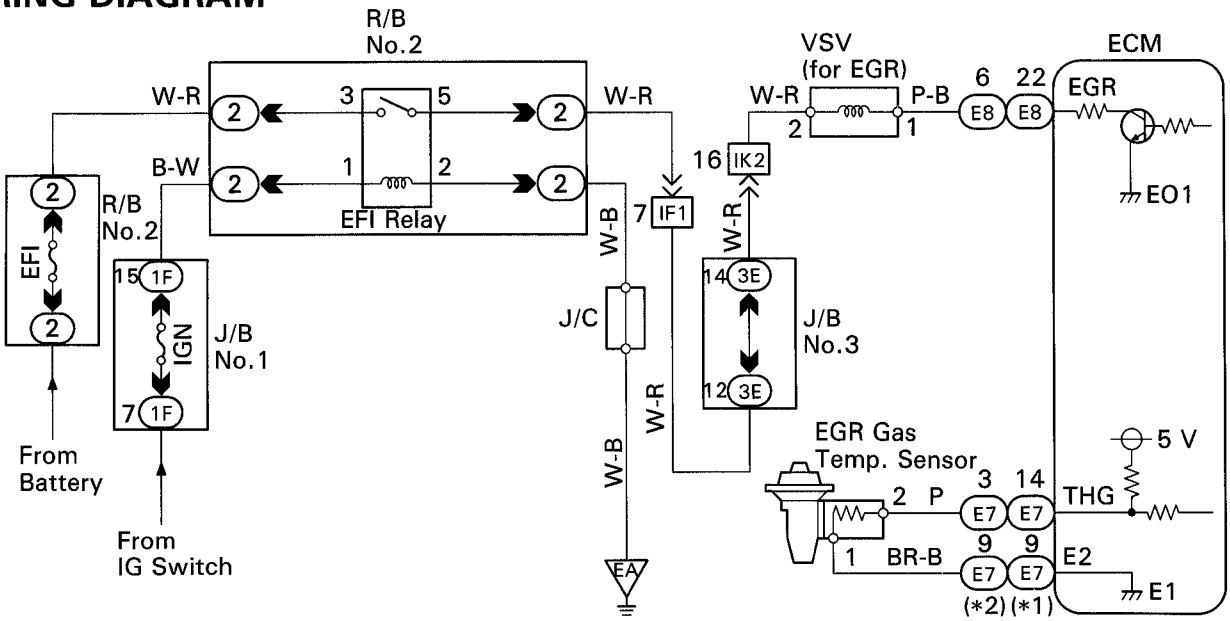

P23411

*1: 3RZ-FE A/T
*2: 3RZ-FE M/T, 2RZ-FE

SYSTEM CHECK DRIVING PATTERN

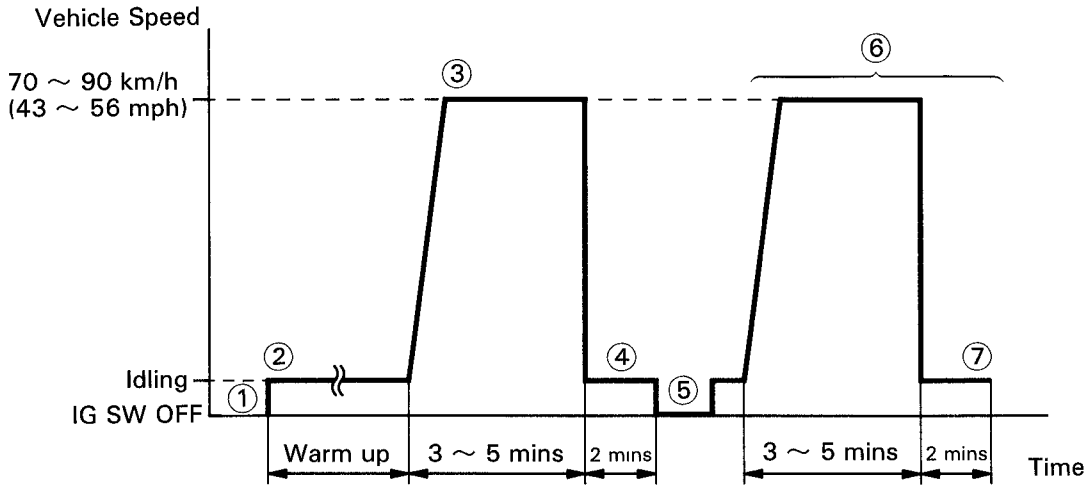

P20769

① Connect the OBD II scan tool or TOYOTA hand-held tester to the DLC3.
② Start and warm up the engine with all accessories switched OFF.
③ Run the vehicle at 70 ~ 90 km/h (43 ~ 56 mph) for 3 minutes or more.
④ Idle the engine for about 2 minutes.
⑤ Stop at safe place and turn the ignition switch OFF.
⑥ Start the engine and do steps ③ and ④ again.
⑦ Check the "READINESS TESTS" mode on the OBD II scan tool or TOYOTA hand-held tester. If "COMPL" is displayed and the MIL does not light up, the system is normal. If "INCMPL" is displayed and the MIL does not light up, run the vehicle again and check it.

HINT: "INCMPL" is displayed when either condition (a) or (b) exists.
(a) The system check is incomplete.
(b) There is a malfunction in the system.
If there is a malfunction in the system, the MIL will light up after steps ② to ⑥ above are done.

INSPECTION PROCEDURE

TOYOTA hand-held tester

1 **Connect the TOYOTA hand-held tester and read value of EGR gas temperature value.**

P (1) Connect the TOYOTA hand-held tester to the DLC3.
(2) Turn ignition switch ON and TOYOTA hand-held tester main switch ON.

EG

C Read EGR gas temperature on the TOYOTA hand-held tester.

OK **EGR gas temp.: 10°C (50°F) or more**

HINT: If there is an open circuit, the TOYOTA hand-held tester indicates 3.1°C (37.6°F).

NG

OK → **Go to step 4 .**

2 **Check for open in harness or ECM.**

ON

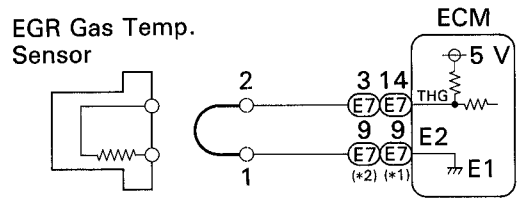

*1: 3RZ-FE A/T
*2: 3RZ-FE M/T, 2RZ-FE

BE6653
P19555

P (1) Disconnect the EGR gas temp. sensor connector.
(2) Connect sensor wire harness terminals together.
(3) Turn ignition switch ON.

C Read EGR gas temperature on the TOYOTA hand-held tester.

OK **EGR gas temp.: 159.3°C (318.7°F)**

NG

OK → **Confirm good connection at sensor. If OK, replace EGR gas temp. sensor.**

3 Check for open in harness or ECM.

ON

EGR Gas Temp. Sensor

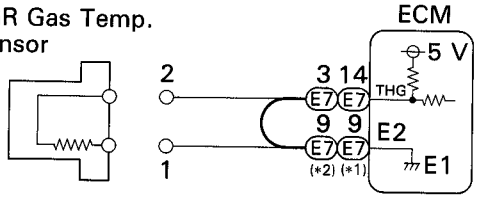

*1: 3RZ-FE A/T
*2: 3RZ-FE M/T, 2RZ-FE

For 3RZ-FE M/T, 2RZ-FE

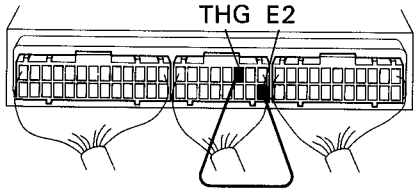

For 3RZ-FE A/T

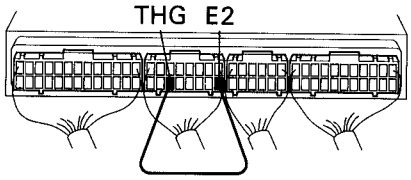

BE6653
P19553
P19705
P19681

P (1) Remove glove compartment (See page EG-157).
(2) Connect between terminals THG and E2 of ECM connector.

HINT: EGR gas temp. sensor connector is disconnected. Before checking, do a visual check and contact pressure check for the ECM connector (See page IN-24).

C Read EGR gas temperature on the TOYOTA hand-held tester.

OK **EGR gas temp. : 159.3°C (318.7°F)**

NG

OK → **Open in harness between terminals E2 or THG. Repair or replace harness.**

Confirm connection at ECM. If OK, replace ECM.

4 Check the connection of the vacuum hose, EGR hose (See page EG-111).

OK

NG → **Repair or replace.**

EG

5 Check the VSV for EGR.

ON

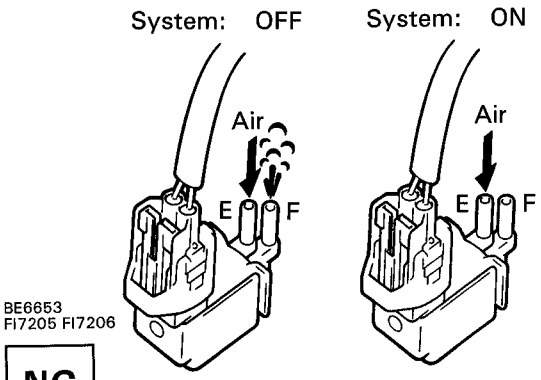

BE6653
FI7205 FI7206

P Select the ACTIVE TEST mode on the TOYOTA hand-held tester.

C Check operation of VSV, when it is operated by the TOYOTA hand-held tester.

OK **EGR system is OFF:**
Air from pipe E is flowing out through pipe F.
EGR system is ON:
Air does not flow from pipe E to pipe F.

NG → **OK** → **Go to step 7.**

6 Check operation of the VSV for EGR (See page EG-153).

OK → **NG** → **Replace VSV for EGR.**

Check for short in harness and connector between VSV and ECM (See page IN-24).

7 Check EGR vacuum modulator (See page EG-117).

OK → **NG** → **Repair or replace.**

8 Check EGR valve (See page EG-116).

OK → **NG** → **Repair or replace.**

9 **Check value of EGR gas temp. sensor.**

P (1) Connect the TOYOTA hand-held tester to the DLC3.
(2) Turn ignition switch ON and TOYOTA hand-held tester main switch ON.
(3) Select the ACTIVE TEST mode on the TOYOTA hand-held tester. (EGR system ON)
(4) Race the engine at 4,000 rpm for 3 mins.

C Measure the EGR gas temp. while racing engine at 4,000 rpm.

OK **EGR gas temp. after 3 mins.: 140°C (284°F) or more**

OK

NG → **Replace EGR gas temp. sensor.**

Check and replace ECM (See page IN-29).

OBD II scan tool (excluding TOYOTA hand-held tester)

1 **Check resistance of EGR gas temp. sensor.**

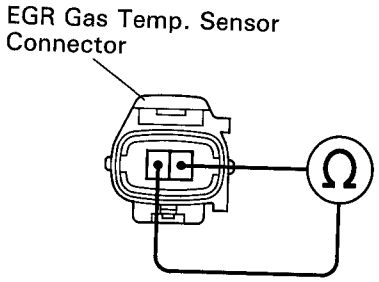

P24322

P Disconnect EGR gas temp. sensor connector.

C Measure resistance between terminals of EGR gas temp. sensor connector.

OK **Resistance: 600 kΩ or less**

HINT: If there is open circuit, ohmmeter indicates 720 kΩ or more.

OK

NG → **Check and replace EGR gas temp. sensor (See page EG-155).**

2 **Check for open in harness or ECM.**

ON

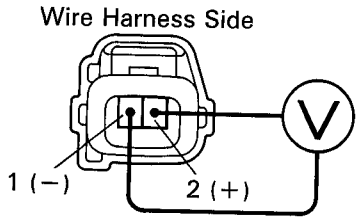

BE6653
P24204

P (1) Disconnect EGR gas temp. sensor connector.
(2) Turn ignition switch ON.

C Measure voltage between terminals of EGR gas temp. sensor wire harness side connector.

OK **Voltage: 4.5 – 5.5 V**

NG

OK → **Go to step 4 .**

3 **Check for open in harness or ECM.**

ON

P (1) Remove glove compartment (See page EG-157).
(2) Turn ignition switch ON.

C Measure voltage between terminals THG and E2 of ECM connector.

HINT: EGR gas temp. sensor connector is disconnected.

OK **Voltage: 4.5 – 5.5 V**

For 3RZ-FE M/T, 2RZ-FE

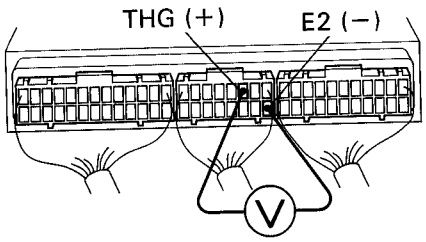

For 3RZ-FE A/T

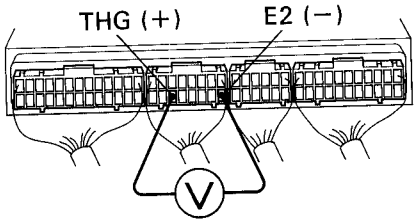

BE6653
P24202
P24203

NG

OK **Open in harness between terminals E2 or THG. Repair or replace harness.**

Confirm connection at ECM. If OK, replace ECM.

4 **Check connection of vacuum hose, EGR hose (See page EG-111).**

OK

NG **Repair or replace.**

5 **Check the VSV for EGR.**

ON

P (1) Remove glove compartment (See page EG-157).
(2) Disconnect ECM E8 connector.
(3) Turn ignition switch ON.

C Check VSV function
(1) Connect between terminal EGR of ECM and body ground (ON).
(2) Disconnect between terminal EGR of ECM and body ground (OFF).

OK **(1) VSV is ON:**
Air from pipe E flows out through pipe F.
(2) VSV is OFF:
Air does not flow from pipe E to pipe F.

For 3RZ-FE M/T, 2RZ-FE

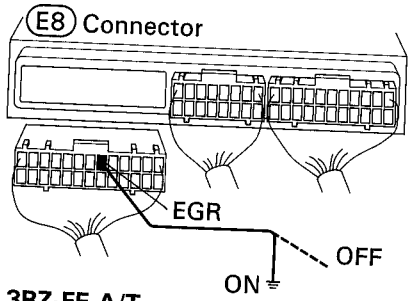

For 3RZ-FE A/T

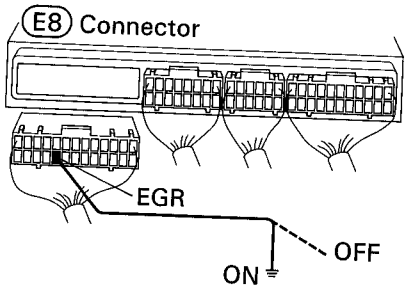

BE6653
P21086
P21087

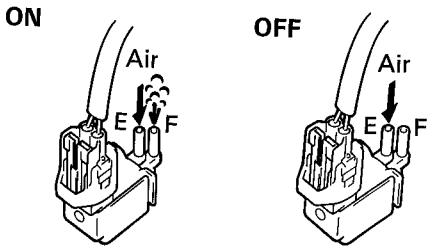

FI7205, FI7206

NG

OK → **Go to step 7.**

6 **Check operation of the VSV for EGR (See page EG-153).**

OK

NG → **Replace VSV for EGR.**

Check for open in harness and conncetor between R/B No.2 and ECM (See page IN-24).

7 **Check EGR vacuum modulator (See page EG-117).**

OK

NG → **Repair or replace.**

8 **Check EGR valve (See page EG-116).**

OK

NG → **Repair or replace.**

9 **Check resistance of EGR gas temp. sensor.**

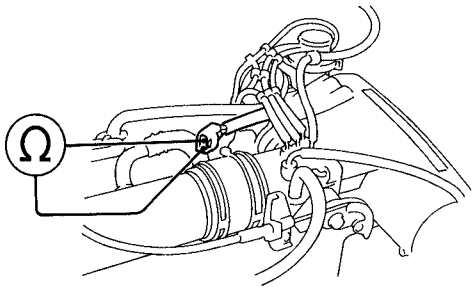

P24228

P (1) Disconnect EGR gas temp. sensor connector.
(2) Start the engine and warm it up.
(3) Disconnect VSV connector.
(4) Race the engine at 4,000 rpm for 3 mins.

C Measure the resistance of the EGR gas temp. sensor while racing the engine at 4,000 rpm.

OK **Resistance of EGR gas temp. sensor after 3 mins: 4.3 kΩ or less.**

HINT: Resistance: At 20°C (68°F): 188.6 – 439.0 kΩ

NG → **Replace EGR gas temp. sensor.**

OK →

Check and replace ECM (See page IN-29).

DTC P0402 Exhaust Gas Recirculation Flow Excessive Detected

CIRCUIT DESCRIPTION

Refer to Exhaust Gas Recirculation Flow Insufficient Detected on page EG-242.

DTC No.	DTC Detecting Condition	Trouble Area
P0402	EGR gas temp. sensor value is high during EGR cut-off when engine is cold and vacuum is applied to port E. (2 trip detection logic)	• EGR valve stuck open • EGR VSV open malfunction • Open in VSV circuit for EGR • Short in EGR gas temp. sensor circuit • ECM
	EGR valve is always open (2 trip detection logic)	

See DTC P0401 for System Check Driving Pattern and Wiring Diagram.

INSPECTION PROCEDURE

TOYOTA hand-held tester

1 **Connect the TOYOTA hand-held tester and read EGR gas temperature value.**

P (1) Connect the TOYOTA hand-held tester to the DLC3.
(2) Turn ignition switch ON and TOYOTA hand-held tester main switch ON.

C Read EGR gas temperature on the TOYOTA hand-held tester.

OK **EGR gas temp.: 150°C (302°F) or less (Not immediately after driving)**

HINT: If there is a short circuit, the TOYOTA hand-held tester indicates 159.3°C (318.7°F).

NG →

OK → **Go to step 4 .**

2 Check for short in harness and ECM.

ON

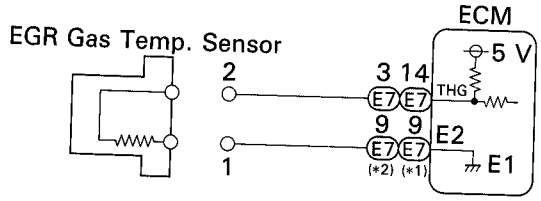

BE6653
P19554

*1: 3RZ-FE A/T
*2: 3RZ-FE M/T, 2RZ-FE

P Disconnect the EGR gas temperature sensor connector.

C Read EGR gas temperature on the TOYOTA hand-held tester.

OK **EGR gas temp.: 3.1°C (37.6°F)**

NG

OK → **Replace EGR gas temp. sensor.**

3 Check for short in harness or ECM.

ON

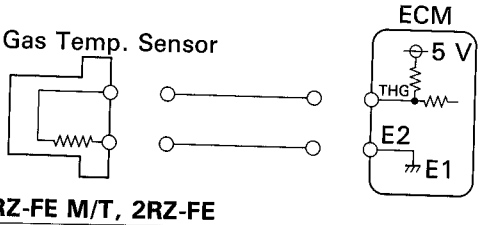

P (1) Remove glove compartment (See page EG-157).
(2) Disconnect the (E7) connector of ECM.

HINT: EGR gas temp. sensor is disconnected.

C Read EGR gas temp. on the TOYOTA hand-held tester.

OK **EGR gas temp.: 3.1°C (37.6°F)**

For 3RZ-FE M/T, 2RZ-FE

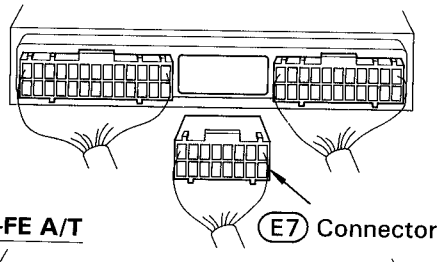

For 3RZ-FE A/T

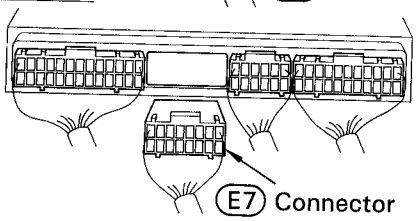

BE6653
FI7056
P19785
P19798

NG

OK → **Repair or replace harness or connector.**

Check and replace ECM (See page IN-29).

4 Check the VSV for EGR (See page EG-246, step 5).

NG

OK → **Check EGR valve (See page EG-116).**

5 Check operation of the VSV for EGR (See page EG-153).

OK → Check for open in harness and connector between R/B No.2 and ECM (See page IN-24).

NG → Replace VSV EGR.

EG

OBD II scan tool (excluding TOYOTA hand-held tester)

1 Check resistance of EGR gas temp. sensor.

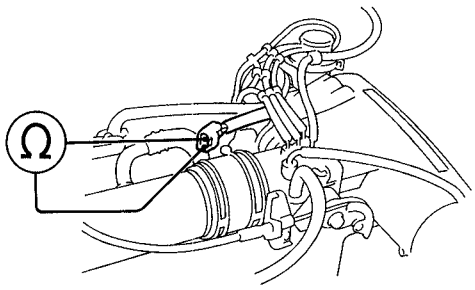

P24228

P Disconnect EGR gas temp. sensor connector.

C Measure resistance between terminals of EGR gas temp. sensor connector.

OK **Resistance: 2.5 kΩ or more (Not immediately after driving)**

HINT: If there is short circuit, ohmmeter indicates 200 Ω or less.

OK → **2** Check for short in harness and connector between EGR gas temp. sensor and ECM (See page IN-24).

NG → Replace EGR gas temp. sensor.

OK → **3** Check the VSV for EGR (See page EG-249, step 5).

NG → Repair or replace harness or connector.

OK → Check EGR valve (See page EG-116).

NG → **4** Check operation of the VSV for EGR (See page EG-153).

OK → Check for open in harness and connector between R/B No.2 and ECM (See page IN-24).

NG → Replace VSV for EGR.

5	Check for open in harness and connector between R/B No.2 and ECM (See page IN-24).

OK

NG → Repair or replace harness or connector.

Check and replace ECM (See page IN-29).

DTC P0420 Catalyst System Efficiency Below Threshold

CIRCUIT DESCRIPTION

The ECM compares the waveform of the oxygen sensor located before the catalyst with the waveform of the oxygen sensor located after the catalyst to determine whether or not catalyst performance has deteriorated.

Air-fuel ratio feedback compensation keeps the waveform of the oxygen sensor before the catalyst repeatedly changing back and forth from rich to lean.
If the catalyst is functioning normally, the waveform of the oxygen sensor after the catalyst switches back and forth between rich and lean much more slowly than the waveform of the oxygen sensor before the catalyst.

But when both waveforms change at a similar rate, it indicates that catalyst performance has deteriorated.

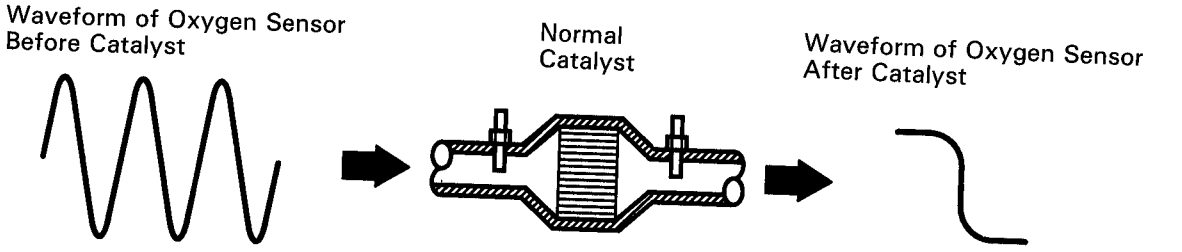

F17081

DTC No.	DTC Detecting Condition	Trouble Area
P0420	After the engine and the catalyst are warmed up, and while the vehicle is driven within the set vehicle and engine speed range, the waveforms of the heated oxygen sensors (bank 1 sensor 1 and bank 1 sensor 2) have the same amplitude (2 trip detection logic)	• Three-way catalytic converter • Open or short in heated oxygen sensor circuit • Heated oxygen sensor

CONFIRMATION ENGINE RACING PATTERN

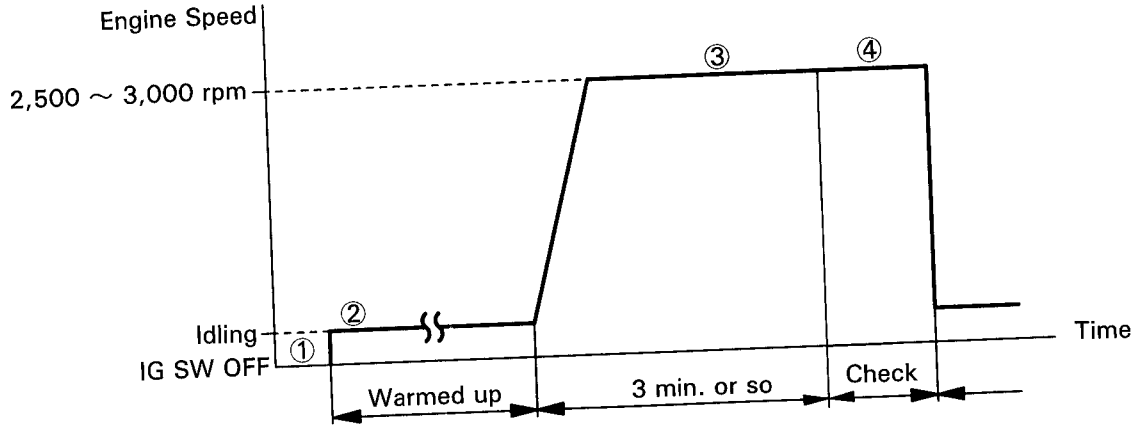

FI7132

① Connect the TOYOTA hand-held tester to the DLC3, or connect the probe of the oscilloscope between terminals OX1, OX2 and E1 of ECM.

② Start engine and warm it up with all accessories switched OFF until water temperature is stable.

③ Race the engine at 2,500 ~ 3,000 rpm for about 3 min.

④ After confirming that the waveforms of the heated oxygen sensor, bank 1 sensor 1 (OX1), oscillate around 0.5 V during feedback to the ECM, check the waveform of the heated oxygen sensor, bank 1 sensor 2 (OX2).

HINT:

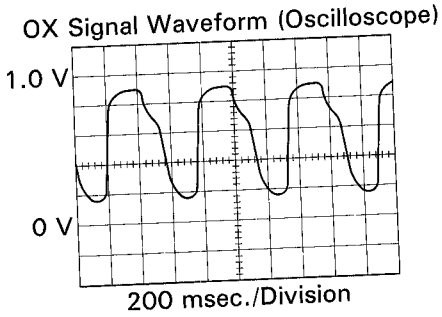

FI6514

If there is a malfunction in the system, the waveform of the heated oxygen sensor, bank 1 sensor 2 (OX2), is almost the same as that of the heated oxygen sensor, bank 1 sensor 1 (OX1), on the left.
There are some cases where, even though a malfunction exists, the MIL may either light up or not light up.

INSPECTION PROCEDURE

1	Are there any other codes (besides DTC P0420) being output?

NO

YES → Go to relevant DTC chart.

2	Check heated oxygen sensor (See page EG-225).

OK

NG → Repair or replace.

Replace three-way catalytic converter.

DTC P0440 Evaporative Emission Control System Malfunction (Only for 4WD models)

CIRCUIT DESCRIPTION

The vapor pressure sensor and VSV for vapor pressure sensor are used to detect abnormalities in the evaporative emission control system.
The ECM decides whether there is an abnormality in the evaporative emission control system based on the vapor pressure sensor signal.
DTC P0440 is recorded by the ECM when evaporative emissions leak from the components within the dotted line in fig. 1 below, or when the vapor pressure sensor malfunctions.

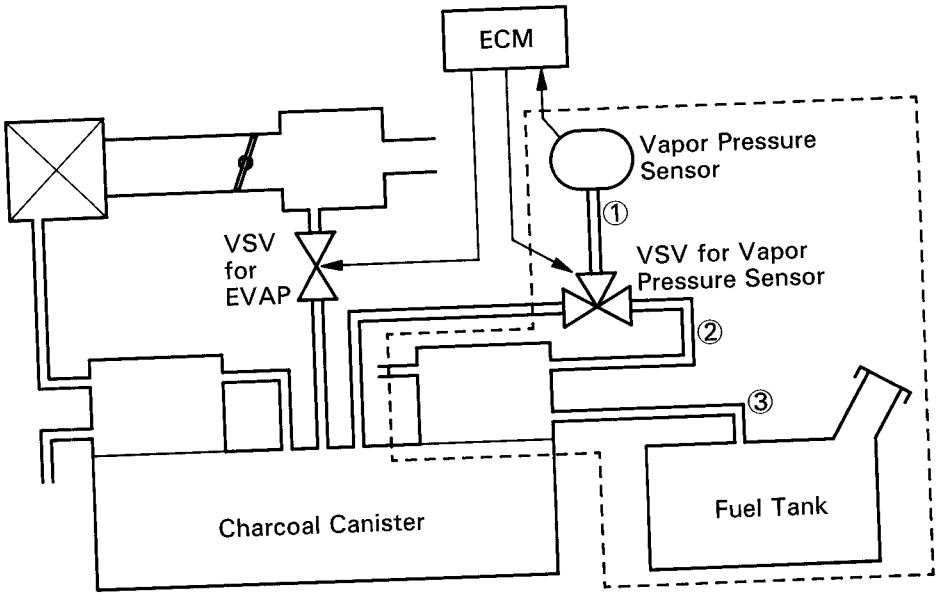

fig. 1

S00043

DTC No.	DTC Detecting Condition	Trouble Area
P0440	The fuel tank pressure is atmospheric pressure after the vehicle is driven for 20 min. (2 trip detection logic)	• Vapor pressure sensor • Fuel tank cap incorrectly installed • Fuel tank cap cracked or damaged • Vacuum hose cracked, holed, blocked, damaged, or disconnected (① or ② in fig. 1) • Hose or tube cracked, holed, damaged or loose (③ in fig. 1) • Fuel tank cracked, holed or damaged • Charcoal canister cracked, holed or damaged

WIRING DIAGRAM

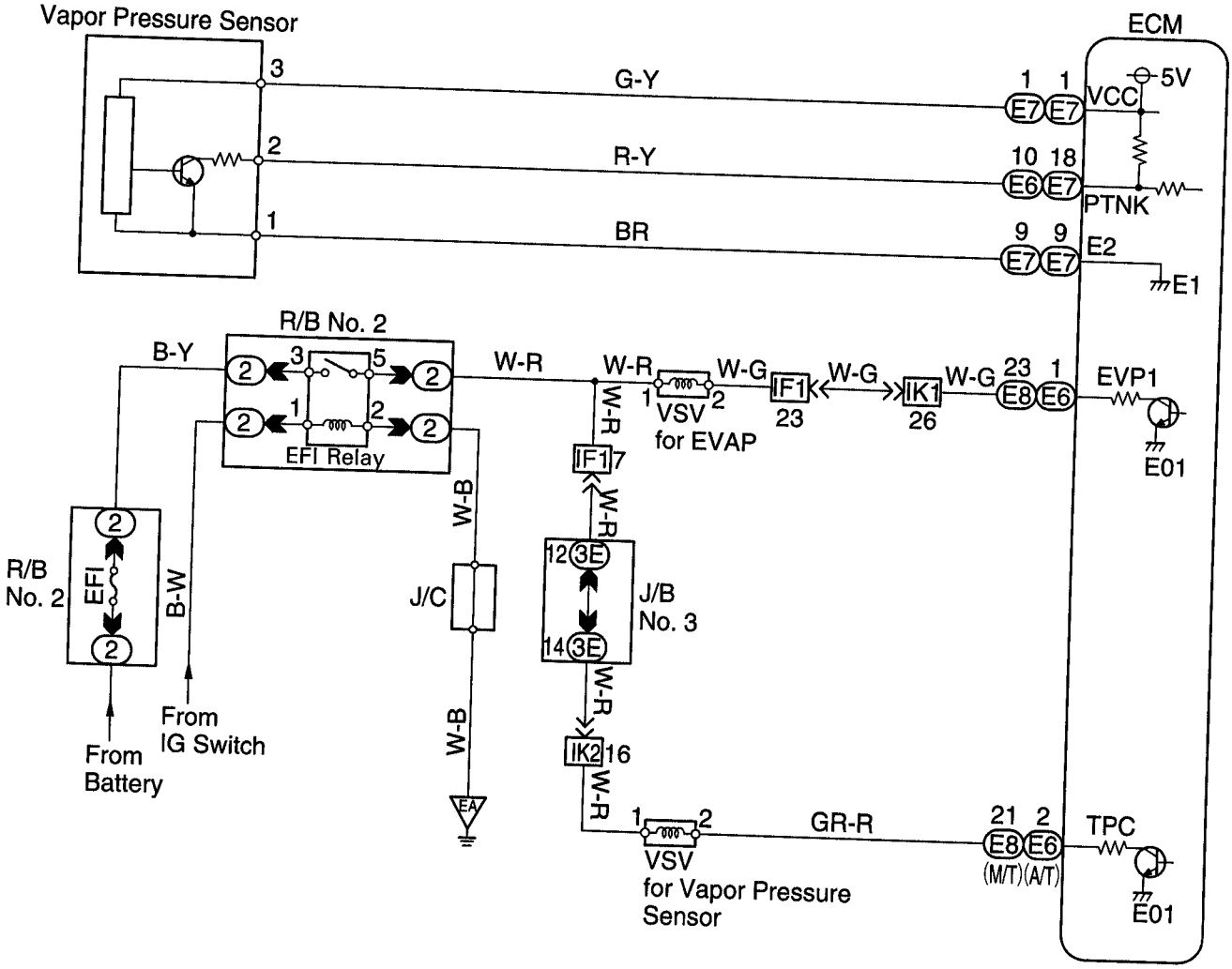

INSPECTION PROCEDURE

HINT:

- If DTC P0441, P0446 or P0450 is output after DTC P0440, first troubleshoot DTC P0441, P0446 or P0450. If no malfunction is detected, troubleshoot DTC P0440 next.
- Ask the customer whether, after the MIL came on, the customer found the fuel tank cap loose and tightened it. Also ask the customer whether the fuel tank cap was loose when refuelling. If the fuel tank cap was not loose, it was the cause of the DTC. If the fuel tank cap was not loose or if the customer was not sure if it was loose, troubleshoot according to the following procedure.

1 **Check whether the hoses close to the fuel tank have been modified, and check whether there are signs of any accident near the fuel tank or charcoal canister.**

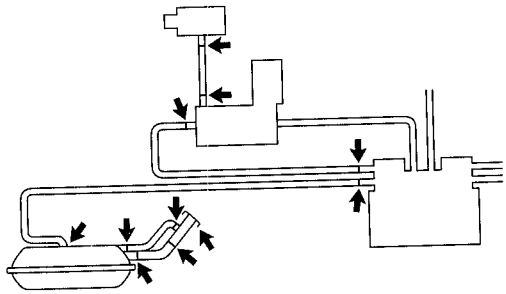

S00024

C Check for cracks, deformation and loose connection of the following parts

- Fuel tank
- Charcoal canister
- Fuel tank filler pipe
- Hoses and tubes around the fuel tank and charcoal canister

OK

NG → **Repair or replace.**

2 **Check that the fuel tank cap is TOYOTA genuine parts.**

OK

NG → **Replace to TOYOTA genuine parts.**

3 **Check that the fuel tank cap is correctly installed.**

OK

NG → **Correctly install the fuel tank cap.**

4 **Check the fuel tank cap (See page EG-112).**

OK

NG → **Replace fuel tank cap.**

5 **Check the filler neck for damage.**

P Remove the fuel tank cap.

C Visually inspect the filler neck for damage.

OK

NG → **Replace the filler neck.**

6 **Check the vacuum hoses between vapor pressure sensor and VSV for vapor pressure sensor, and VSV for vapor pressure sensor and charcoal canister.**

C (1) Check that the vacuum hose is connected correctly.
(2) Check the vacuum hose for looseness and disconnection.
(3) Check the vacuum hose for cracks, hole and damage.

OK → NG → **Repair or replace.**

7 **Check the hose and tube between fuel tank and charcoal canister.**

C (1) Check for proper connection of the fuel tank and fuel evap pipe (See page EG-112), fuel evap pipe and fuel tube under the floor, fuel tube under the floor and charcoal canister.
(2) Check the hose and tube for cracks, hole and damage.

OK → NG → **Repair or replace.**

8 **Check the charcoal canister for cracks, hole and damage (See page EG-113).**

OK → NG → **Replace charcoal canister.**

9 **Check voltage between terminals VCC and E2 of ECM connector.**

ON

For M/T

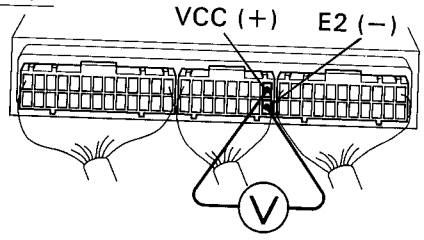

For A/T

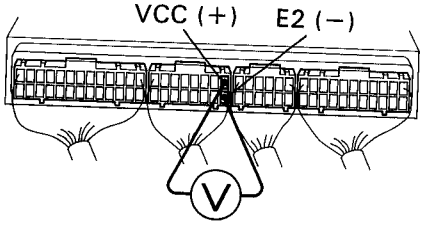

BE6653
P23812
P23813

P (1) Remove glove compartment (See page EG-157).
(2) Turn ignition switch ON.

C Measure voltage between terminals VCC and E2 of ECM connector.

OK **Voltage: 4.5 – 5.5 V**

OK → NG → **Check and replace ECM (See page IN-29).**

10 Check voltage between terminals PTNK and E2 of ECM connector

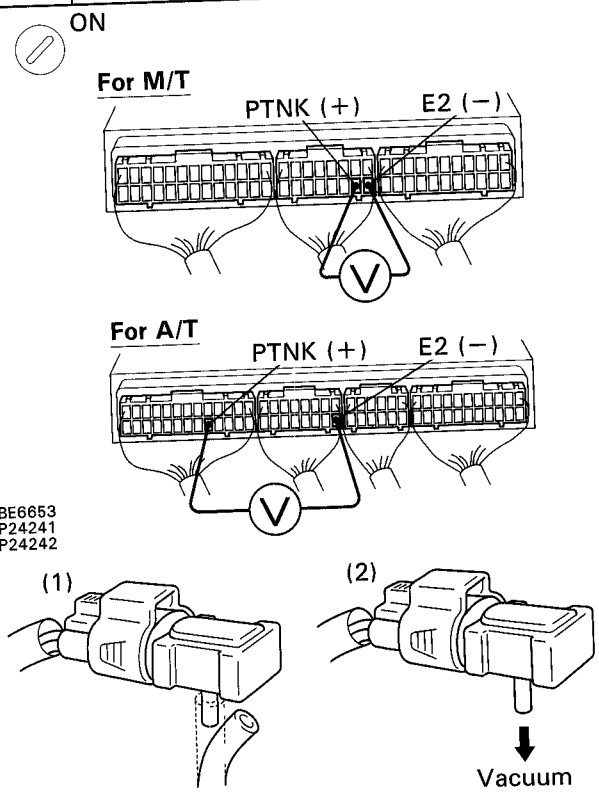

P (1) Remove the glove compartment (See page EG-157).
(2) Turn ignition switch ON.

C Measure voltage between terminals PTNK and E2 of ECM connector.
(1) Disconnect the vacuum hose from the vapor pressure sensor.
(2) Using the MITYVAC (Hand-Held Vacuum Pump), apply a vacuum to the vapor pressure sensor.

NOTICE: The vacuum applied to the vapor pressure sensor must be less than 66.7 kPa (500 mmHg, 19.7 in.Hg).

OK **(1) Voltage: 2.9 ~ 3.7 V**
(2) Voltage: 0.5 V or less

NG

OK → **Go to step 12 .**

11 Check for open and short in harness and connector between vapor pressure sensor and ECM (See page IN-24).

OK

NG → **Repair or replace harness or connector.**

Replace vapor pressure sensor.

12 **Check the fuel tank for cracks and damage.**

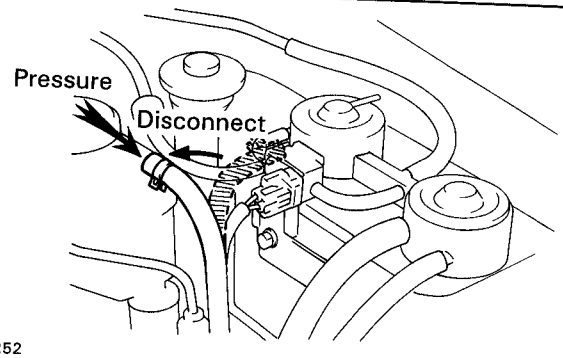

S00252

P (1) Disconnect the vacuum hose from charcoal canister.
(2) Correctly install the fuel tank cap.
(3) Apply a pressure of 5 kPa (50 gf/cm², 0.7 psi) to the fuel tank.

C Check whether the pressure is maintained after 1 minute.

OK **Pressure applied to the fuel tank is maintained.**

OK

NG → **Replace fuel tank.**

It is likely that the vehicle user did not properly close the fuel tank cap. Please explain to the customer how to properly install the fuel tank cap.

EG

DTC P0441 Evaporative Emission Control System Incorrect Purge Flow (For 2WD models)

CIRCUIT DESCRIPTION

To reduce HC emissions, evaporated fuel from the fuel tank is routed through the charcoal canister to the intake manifold for combustion in the cylinders.

The ECM changes the duty signal to the VSV for EVAP so that the intake quantity of HC emissions is appropriate for the driving conditions (engine load, engine speed, vehicle speed, etc.) after the engine is warmed up.

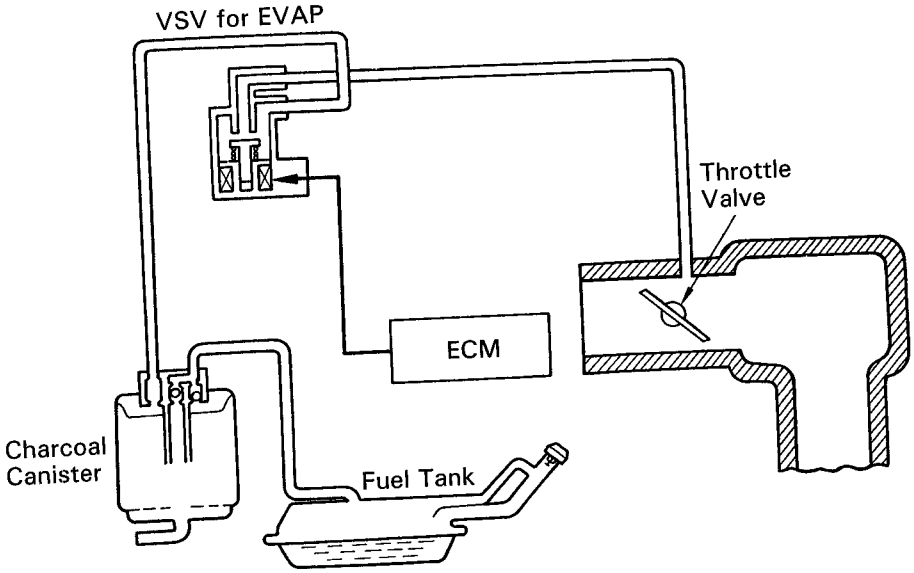

P19894

DTC No.	DTC Detecting Condition	Trouble Area
P0441	The proper response to the computer command does not occur (2 trip detection logic)	• Open or short in VSV for EVAP circuit • VSV for EVAP • ECM • Vacuum hose blocked or disconnected • Charcoal canister

WIRING DIAGRAM

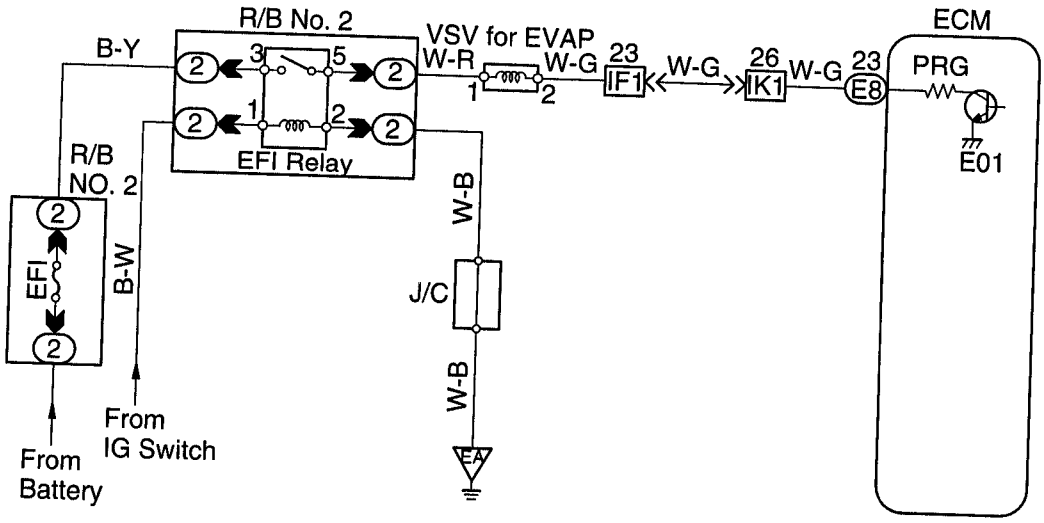

S00269

INSPECTION PROCEDURE

TOYOTA hand-held tester

1 **Connect the TOYOTA hand-held tester and check operation of VSV for EVAP.**

ON

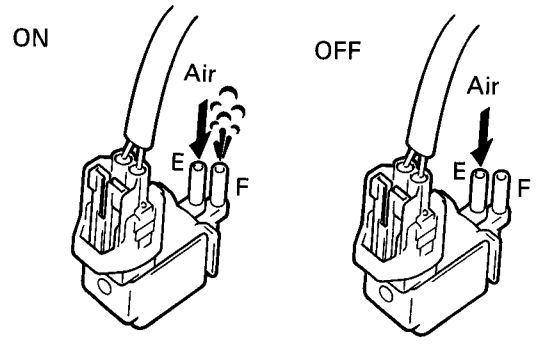

BE6653
FI7205 FI7206

P (1) Connect the TOYOTA hand-held tester to DLC3.
(2) Turn ignition switch ON and TOYOTA hand-held tester main switch ON.
(3) Select the ACTIVE TEST mode on the TOYOTA hand-held tester.

C Check operation of VSV when VSV is operated by the TOYOTA hand-held tester.

OK **VSV is ON:**
Air from pipe E is flowing out through pipe F.
VSV is OFF:
Air does not flow from pipe E to pipe F.

NG

OK → **Go to step 4.**

2 **Check the VSV for EVAP (See page EG-152).**

OK

NG → **Replace VSV for EVAP.**

3 Check for open and short in harness and connector between EFI relay and ECM (See page IN-24).

OK → Check and replace ECM (See page IN-29).

NG → Repair or replace harness or connector.

4 Check connection of vacuum hose (See page EG-111).

OK → Check and repair charcoal canister (See page EG-114).

NG → Repair or replace.

OBD II scan tool (excluding TOYOTA hand-held tester)

1 Check the VSV for EVAP (See page EG-152).

OK → **2** Check voltage between terminal PRG of ECM connector and body ground.

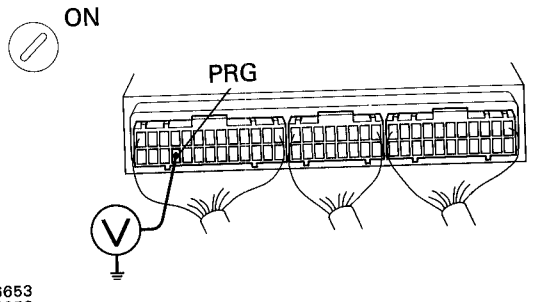

BE6653
P24253

P (1) Remove glove compartment (See page EG-157).
(2) Turn ignition switch ON.

C Measure voltage between terminal PRG of ECM connector and body ground.

OK Voltage: 9 – 14 V

OK → **3** Check connection of vacuum hose (See page EG-111).

NG → Check and repair harness or connector.

OK → Check and replace ECM (See page IN-29).

NG → Repair or replace.

4	Check charcoal canister (See page EG-114).

OK

NG → Repair or replace.

Check and replace ECM (See page IN-29).

DTC P0441 Evaporative Emission Control System Incorrect Purge Flow (For 4WD models)

DTC P0446 Evaporative Emission Control System Vent Control Malfunction (Only for 4WD models)

CIRCUIT DESCRIPTION

The vapor pressure sensor and VSV for vapor pressure sensor are used to detect abnormalities in the evaporative emission control system.

The ECM decides whether there is an abnormality in the evaporative emission control system based on the vapor pressure sensor signal.

DTC P0441 and P0446 are recorded by the ECM when evaporative emissions leak from the components within the dotted line in fig. 1 below, or when there is a malfunction in either the VSV for EVAP, the VSV for vapor pressure sensor, or in the vapor pressure sensor itself.

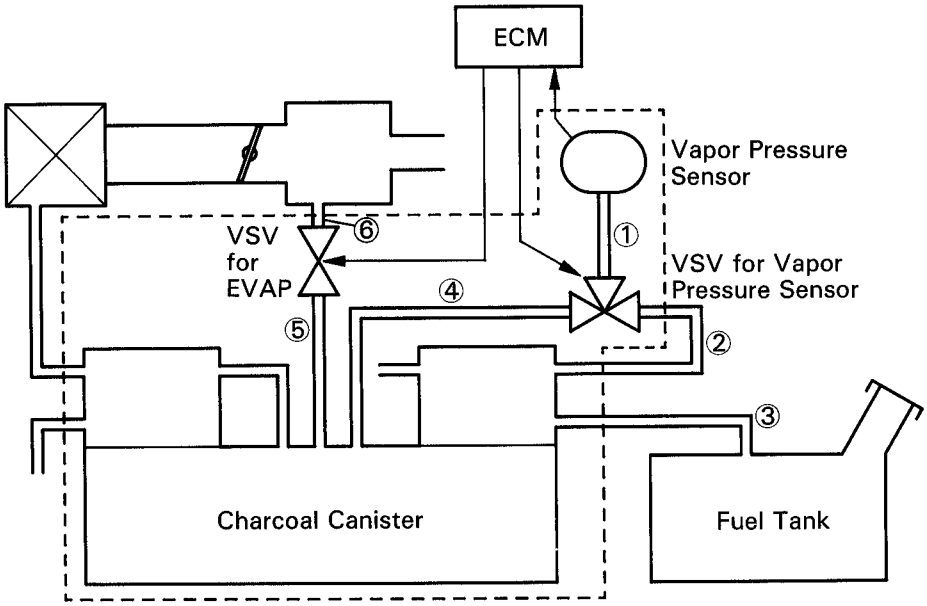

fig. 1

S00044

DTC No.	DTC Detecting Condition	Trouble Area
P0441	The pressure in the charcoal canister does not drop during purge control (2 trip detection logic)	• Open or short in VSV circuit for vapor pressure sensor • VSV for vapor pressure sensor • Open or short in vapor pressure sensor circuit • Vapor pressure sensor • Open or short in VSV circuit for EVAP • VSV for EVAP • Vacuum hose cracks, hole, blocked damaged or disconnected (①, ④, ⑤ and ⑥ in fig. 1) • Charcoal canister cracks, hole or damaged
	During purge cut-off, the pressure in the charcoal canister is very low compared with atmospheric pressure (2 trip detection logic)	
P0446	When VSV for vapor pressure sensor is OFF, ECM judges that there is no continuity between vapor pressure sensor and charcoal canister (2 trip detection logic)	
	When VSV for vapor pressure sensor is ON, ECM judges that there is no continuity between vapor pressure sensor and fuel tank (2 trip detection logic)	
	After the purge cut off operates, the pressure in the charcoal canister is maintained at atmospheric pressure (2 trip detection logic)	

EG

WIRING DIAGRAM

Refer to Evaporative Emission Control System Malfunction on page EG-257.

INSPECTION PROCEDURE

HINT: If DTC P0441, P0446 or P0450 is output after DTC P0440, first troubleshoot DTC P0441, P0446 or P0450. If no malfunction is detected, troubleshoot DTC P0440 next.

TOYOTA hand-held tester

1 Check the VSV connector for EVAP, VSV connector for vapor pressure sensor and vapor pressure sensor connector for looseness and disconnection.

OK → NG → Repair or connect the VSV or sensor connector.

2 Check the vacuum hose between throttle body and VSV for EVAP, VSV for EVAP and charcoal canister, charcoal canister and VSV for vapor pressure sensor, and VSV for vapor pressure sensor and vapor pressure sensor.

C (1) Check that the vacuum hose is connected correctly.
(2) Check the vacuum hose for looseness and disconnection.
(3) Check the vacuum hose for cracks, hole, damage and blockage.

OK → NG → Repair or replace.

3 Check voltage between terminals VCC and E2 of ECM connector (See page EG-259, step 9).

OK → NG → Check and replace ECM (See page IN-29).

4 Check voltage between terminals PTNK and E2 of ECM connector (See page EG-260, step 10).

NG → OK → Go to step 6 .

5 Check for open and short in harness and connector between vapor pressure sensor and ECM (See page IN-24).

OK → NG → Repair or replace harness or connector.

Replace vapor pressure sensor.

6 Check the purge flow.

P (1) Connect the TOYOTA hand-held tester to the DLC3.
(2) Select the ACTIVE TEST mode on the TOYOTA hand-held tester.
(3) Disconnect from the charcoal canister the vacuum hose to the VSV for EVAP.
(4) Start the engine.

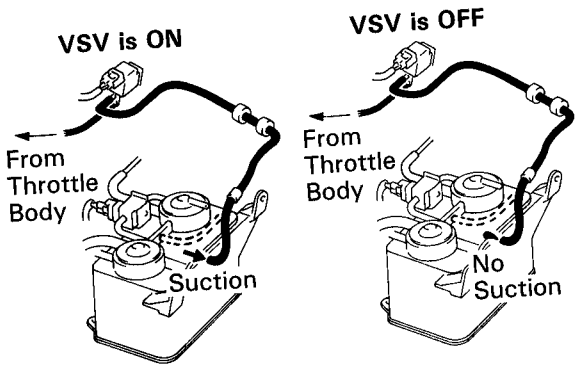

C When the VSV for EVAP is operated by the TOYOTA hand-held tester, check whether the disconnected hose applies suction to your finger.

OK **VSV is ON:**
Disconnected hose applies suction to your finger.

VSV is OFF:
Disconnected hose applies no suction to your finger.

S00015 S00016

NG

OK → **Go to step 10 .**

7 Check the vacuum hose between throttle body and VSV for EVAP, and VSV for EVAP and charcoal canister.

C (1) Check that the vacuum hose is connected correctly.
(2) Check the vacuum hose for looseness and disconnection.
(3) Check the vacuum hose for cracks, hole, damage and blockage.

OK

NG → **Repair or replace.**

8 Check operation of the VSV for EVAP (See page EG-152).

OK

NG → **Replace VSV.**

9 Check for open and short in harness and connector between EFI relay and VSV for EVAP and ECM (See page IN-24).

OK

NG → **Repair or replace harness or connector.**

Check and replace ECM (See page IN-29).

10 **Connect the TOYOTA hand-held tester, when VSV connector for vapor pressure sensor is disconnected and VSV for EVAP is ON, measure voltage between terminals PTNK and E2 of ECM connector.**

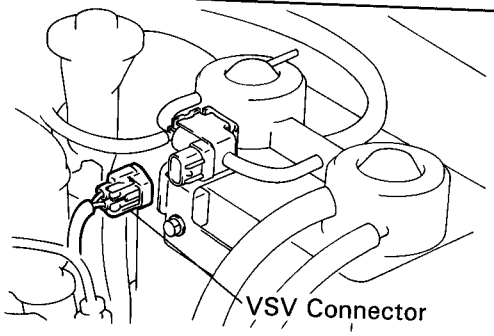

P (1) Connect the TOYOTA hand-held tester to the DLC3.
(2) Disconnect the VSV connector for vapor pressure sensor.
(3) Select the ACTIVE TEST mode on the TOYOTA hand-held tester.
(4) Start the engine.

C Measure voltage between terminals PTNK and E2 of ECM connector, when VSV for EVAP is ON, using the TOYOTA hand-held tester.

OK **Voltage: 2.0 V or less**

START

For M/T

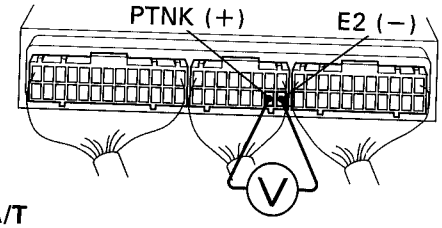

For A/T

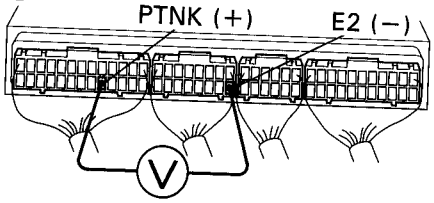

P25798
BE6653
P24241
P24242

NG

OK → **Go to step 12.**

11 **Check the vacuum hose between charcoal canister and VSV for vapor pressure sensor, and vapor pressure sensor and VSV for vapor pressure sensor.**

C (1) Check that the vacuum hose is connected correctly.
(2) Check the vacuum hose for looseness and disconnection.
(3) Check the vacuum hose for cracks, hole, damage and blockage.

OK

NG → **Repair or replace.**

12 **Check operation of the VSV for vapor pressure sensor. (See page EG-154).**

OK

NG → **Replace VSV.**

13 **Check for open and short in harness and connector between EFI relay and VSV for vapor pressure sensor and ECM (See page IN-24).**

OK → **NG** → **Repair or replace harness or connector.**

14 **Check the charcoal canister.**

EG

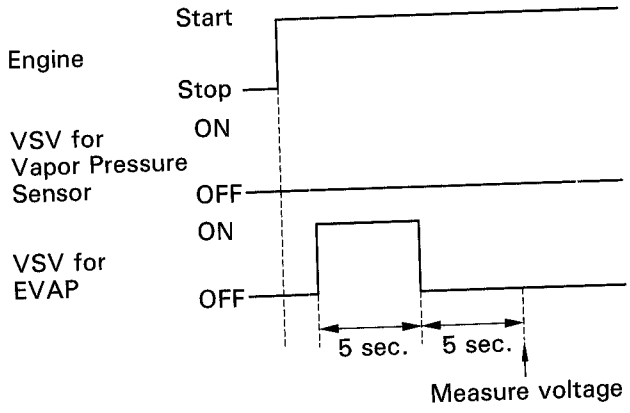

P (1) Connect the TOYOTA hand-held tester to the DLC3.
(2) Remove the fuel tank cap.
(3) Disconnect the VSV connector for vapor pressure sensor.
(4) Select the ACTIVE TEST mode on the TOYOTA hand-held tester.
(5) Start the engine.
(6) VSV for EVAP is ON by TOYOTA hand-held tester and remains on for 5 sec.

C Measure voltage between terminals PTNK and E2 of ECM connector 5 secs. after switching VSV for EVAP from ON to OFF.

OK **Voltage: 2.5 V or less**

For M/T

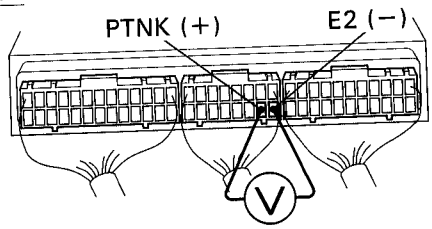

For A/T

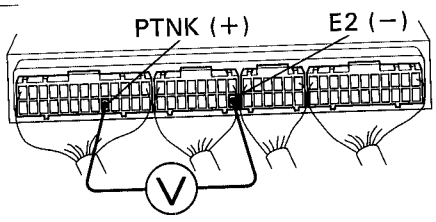

S00049
P24241
P24242

OK → **NG** → **Replace charcoal canister.**

Check and replace ECM.

OBD Ⅱ scan tool (excluding TOYOTA hand-held tester)

1 Check the VSV connector for EVAP, VSV connector for vapor pressure sensor and vapor pressure sensor connector for looseness and disconnection.

OK → NG: Repair or connect the VSV or sensor connector.

2 Check the vacuum hose between throttle body and VSV for EVAP, VSV for EVAP and charcoal canister, charcoal canister and VSV for vapor pressure sensor, and VSV for vapor pressure sensor and vapor pressure sensor.

C
(1) Check that the vacuum hose is connected correctly.
(2) Check the vacuum hose for looseness and disconnection.
(3) Check the vacuum hose for cracks, hole, damage and blockage.

OK → NG: Repair or replace.

3 Check voltage between terminals VCC and E2 of ECM connector (See page EG-259, step 9).

OK → NG: Check and replace ECM (See page IN-29).

4 Check voltage between terminals PTNK and E2 of ECM connector (See page EG-260, step 10).

NG → OK: Go to step 6 .

5 Check for open and short in harness and connector between vapor pressure sensor and ECM (See page IN-24).

OK → NG: Repair or replace harness or connector.

Replace vapor pressure sensor.

6 **Check the VSV for EVAP.**

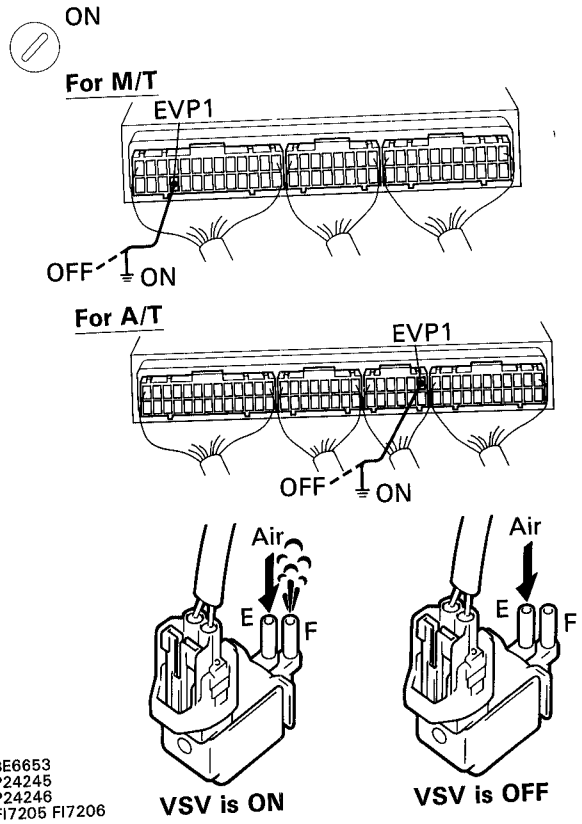

BE6653
P24245
P24246
FI7205 FI7206

P (1) Remove glove compartment (See page EG-157).
(2) Turn ignition switch ON.

C Check VSV function
(1) Connect between terminal EVP1 of ECM and body ground.
(2) Disconnect between terminal EVP1 of ECM and body ground.

OK **(1) VSV is ON:**
Air from pipe E is flowing out through pipe F.
(2) VSV is OFF:
Air does not frow from pipe E to pipe F.

NG

OK → **Go to step 9 .**

7 **Check operator of the VSV for EVAP (See page EG-152).**

OK

NG → **Replace VSV.**

8 **Check for open and short in harness and connector between EFI relay and VSV for EVAP and ECM (See page IN-24).**

OK

NG → **Repair or replace harness or connector.**

Check and replace ECM.

9 **Check the VSV for vapor pressure sensor.**

ON

For M/T

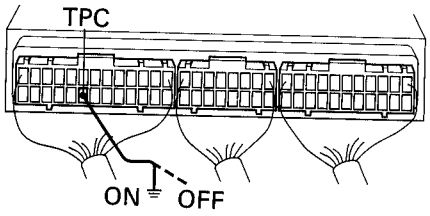

For A/T

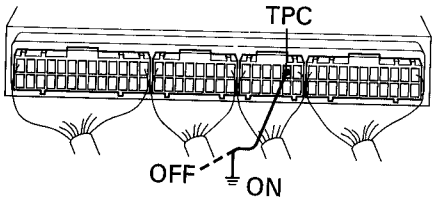

BE6653
P24247
P24248

P (1) Remove glove compartment (See page EG-157).
(2) Turn ignition switch ON.

C Check VSV function
(1) Connect between terminal TPC of ECM and body ground.
(2) Disconnect between terminal TPC of ECM and body ground.

OK **(1) VSV is ON:**
Air from pipe E is flowing out through pipe F.
(2) VSV is OFF:
Air from pipe E is flowing out through pipe G.

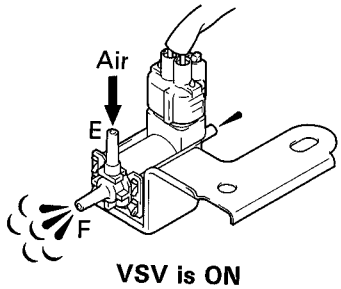

VSV is ON

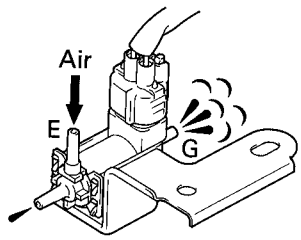

VSV is OFF

P25800 P25801

NG

OK **Check and replace charcoal canister (See page EG-113).**

10 **Check operation of the VSV for vapor pressure sensor (See page EG-154).**

OK

NG **Replace the VSV.**

11 **Check for open and short in harness and connector between EFI relay and VSV for vapor pressure sensor and ECM (See page IN-24).**

OK

NG **Repair or replace harness or connector.**

Check and replace ECM.

DTC P0450 Evaporative Emission Control System Pressure Sensor Malfunction (Only for 4WD models)

CIRCUIT DESCRIPTION

The vapor pressure sensor and VSV for vapor pressure sensor are used to detect abnormalities in the evaporative emission control system.
The ECM decides whether there is an abnormality in the evaporative emission control system based on the vapor pressure sensor signal.
DTC P0450 is recorded by the ECM when the vapor pressure sensor malfunction.

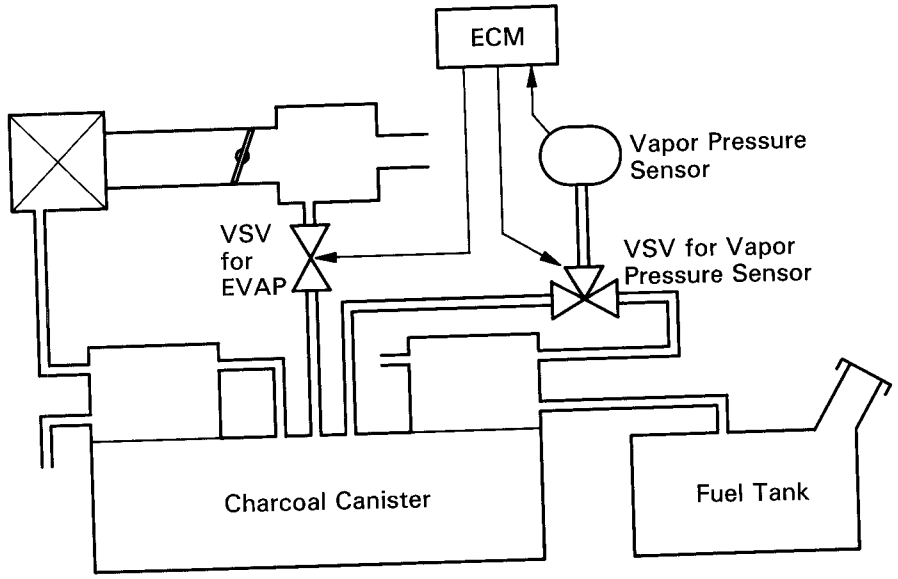

S00042

DTC No.	DTC Detecting Condition	Trouble Area
P0450	Condition (a) or (b) continues. (2 trip detection logic) (a) PTNK < 0.5 V (b) PTNK > 4.5 V	• Open or short in vapor pressure sensor circuit • Vapor pressure sensor • ECM

WIRING DIAGRAM

Refer to Evaporative Emission Control System Malfunction on page EG-257.

INSPECTION PROCEDURE

HINT: If DTC P0441, P0446, or P0450 is output after DTC P0440, first trouble shoot DTC P0441, P0446 or P0450. If no malfunction is detected, troubleshoot DTC P0440 next.

1 Check voltage between terminals VCC and E2 of ECM conncetor (See page EG-259, step 9).

- OK → **2**
- NG → Check and replace ECM.

2 Check voltage between terminals PTNK and E2 of ECM connector (See page EG-260, step 10).

- NG → **3**
- OK → Check and replace ECM.

3 Check for open and short in harness and connector between the vapor pressure sensor and ECM (See page IN-24).

- OK → Replace the vapor pressure sensor.
- NG → Repair or replace harness or connector.

DTC P0500 Vehicle Speed Sensor Malfunction

CIRCUIT DESCRIPTION

This sensor is mounted in the combination meter. It contains a magnet which is rotated by the speedometer cable.
Turning the reed switch ON and OFF 4 times for every revolution of the speedometer.
It is then transmitted to the ECM. The ECM determines the vehicle speed based on the frequency of these pluse signals.

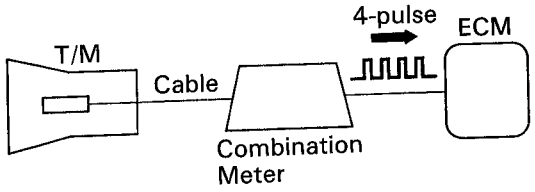

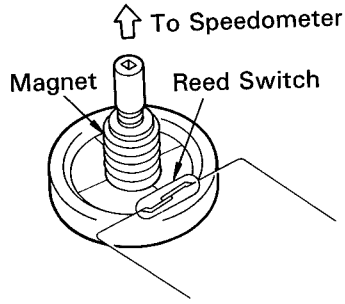

No.1 Vehicle Speed Sensor

FI7112
FI7166

DTC No.	DTC Detecting Condition	Trouble Area
P0500	No vehicle speed sensor signal to ECM under condition (a) (2 trip detection logic) (a) Vehicle is being driven	• Combination meter • Open or short in speed sensor circuit • ECM • Speedometer cable

WIRING DIAGRAM

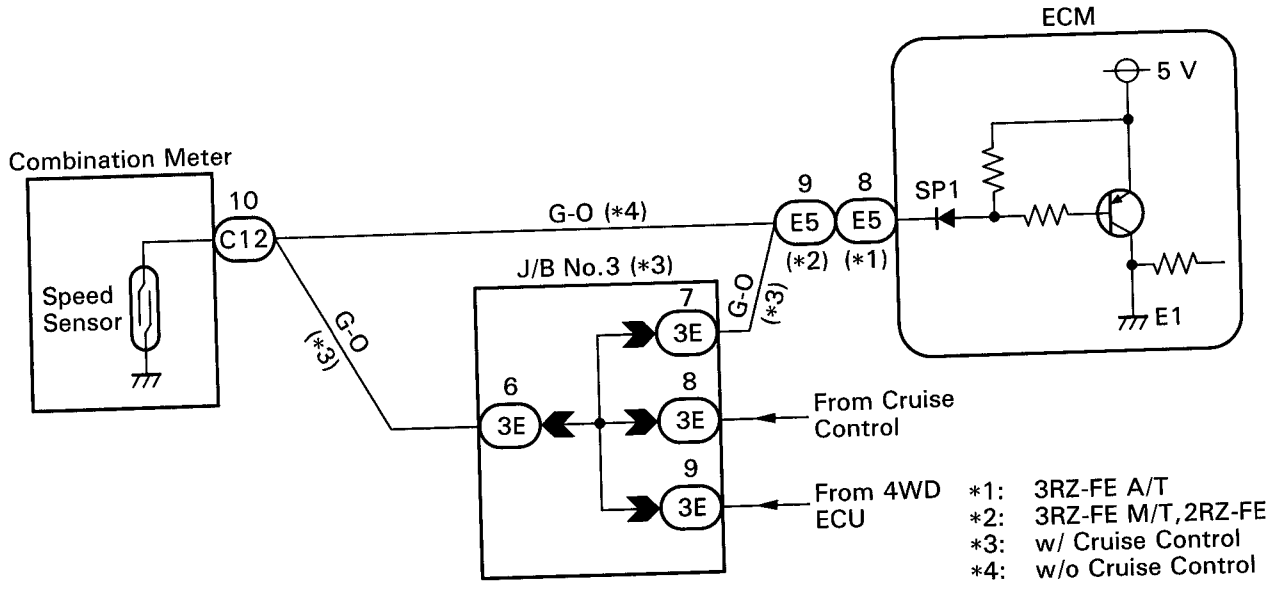

*1: 3RZ-FE A/T
*2: 3RZ-FE M/T, 2RZ-FE
*3: w/ Cruise Control
*4: w/o Cruise Control

P23413

INSPECTION PROCEDURE

1 Check operation of speedometer.

P Drive the vehicle and check if the operation of the speedometer in the combination meter is normal.

HINT: The vehicle speed sensor is operating normally if the speedmeter display is normal.

OK

NG → **Check speedometer and cable (BE-35).**

EG

2 Check voltage between terminal SP1 of ECM connector and body ground.

ON

P (1) Remove glove compartment (See page EG-157).
(2) Disconnect cruise control ECU connector.
(3) Shift the shift lever to neutral.
(4) Jack up one of the rear wheels.
(5) Turn ignition switch ON.

C Measure voltage between terminal SP1 of ECM connector and body ground when the wheel is turned slowly.

OK **Voltage is generated intermittently.**

For 3RZ-FE M/T, 2RZ-FE

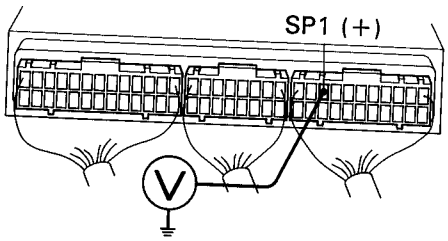

For 3RZ-FE A/T

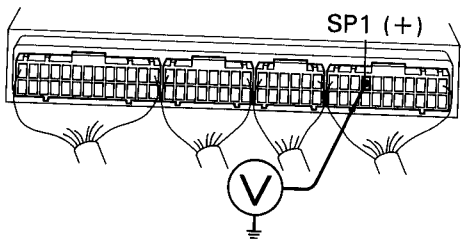

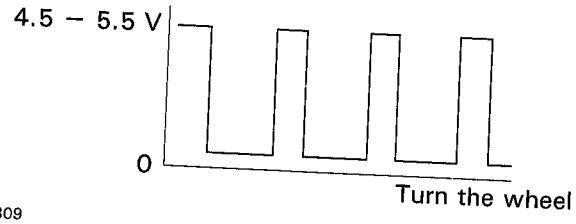

AT7809

BE6653
P24206
P24205

OK

NG → **Check and repair harness and connector between combination meter and ECM.**

Check and replace ECM (See page IN-29).

DTC P0505 Idle Control System Malfunction

CIRCUIT DESCRIPTION

The rotary solenoid type IAC valve is located in front of the intake air chamber and intake air bypassing the throttle valve is directed to the IAC valve through a passage.
In this way the intake air volume bypassing the throttle valve is regulated, controlling the engine speed.

The ECM operates only the IAC valve to perform idle-up and provide feedback for the target idling speed.

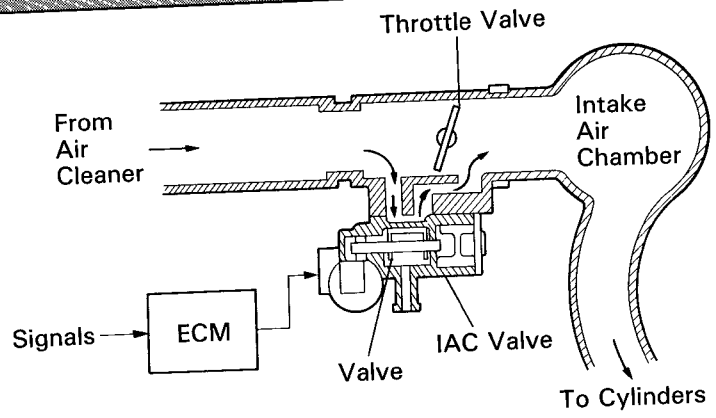

DTC No.	DTC Detecting Condition	Trouble Area
P0505	Idle speed continues to vary greatly from the target speed (2 trip detection logic)	• IAC valve is stuck or closed • Open or short in IAC valve circuit • Air intake (hose loose)

WIRING DIAGRAM

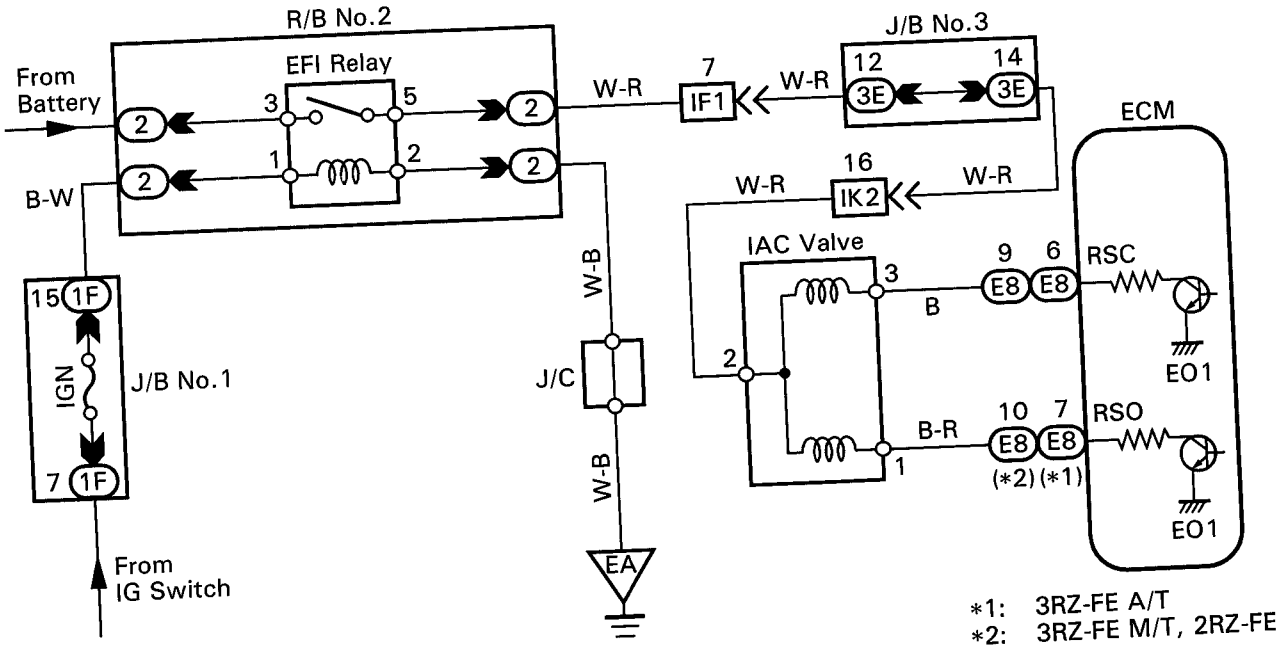

INSPECTION PROCEDURE

1 Check air induction system (See page EG-119).

OK

NG → Repair or replace.

2 Check voltage terminals RSO, RSC.

ON

For 3RZ-FE M/T, 2RZ-FE

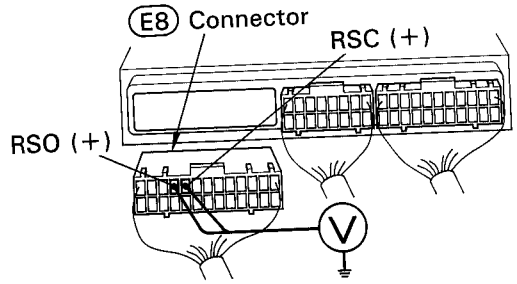

For 3RZ-FE A/T

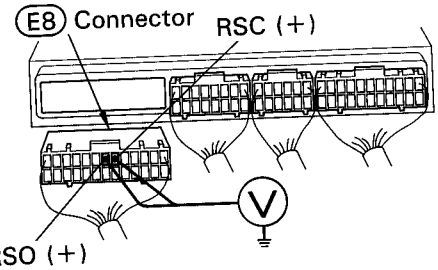

BE6653
P24207
P24208

P (1) Remove glove compartment (See page EG-157).
(2) Disconnect the E8 connector of ECM.
(3) Turn ignition switch ON.

C Measure voltage between terminals RSO, RSC of ECM connector and body ground.

OK Voltage: 9 – 14 V

NG

OK → Go to step 4 .

3 Check IAC valve (See page EG-144).

OK

NG → Replace IAC valve.

Check for open and short in harness and connector between J/B No.2 and IAC valve, IAC valve and ECM (See page IN-24).

4 Check operation of the IAC valve (See page EG-144).

OK

NG → Repair or replace IAC valve.

Check and replace ECM (See page IN-29).

DTC P0510 Closed Throttle Position Switch Malfunction

CIRCUIT DESCRIPTION

Refer to "Throttle/Pedal Position Sensor/Switch "A" Circuit Malfunction on page EG-219.

DTC No.	DTC Detecting Condition	Trouble Area
P0510	The closed throttle position switch does not turn ON even once when the vehicle is driven (2 trip detection logic)	• Open in closed throttle position switch circuit • Closed throttle position switch • ECM

HINT: After confirming DTC P0510 use the TOYOTA hand-held tester to comfirm the closed throttle position switch signal from "CURRENT DATA".

Throttle Valve	Closed throttle position Switch Signal	Malfunction
Fully Closed	OFF	Open Circuit
Fully Open	ON	Short Circuit

WIRING DIAGRAM

Refer to page EG-220 for the WIRING DIAGRAM.

INSPECTION PROCEDURE

HINT: If DTC P0110, P0115 and P0120 are output simultaneously, E2 (sensor ground) may be open.

TOYOTA hand-held tester

1 Check for open in harness or ECM.

ON

*1: 3RZ-FE A/T
*2: 3RZ-FE M/T, 2RZ-FE

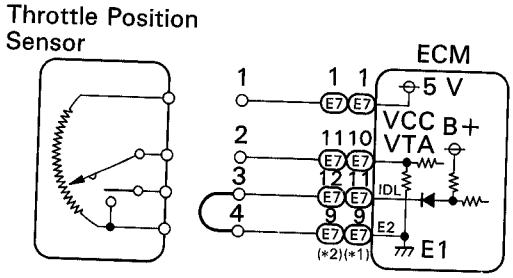

BE6653
P19557

P
(1) Connect the TOYOTA hand-held tester to the DLC3.
(2) Disconnect the throttle position sensor connector.
(3) Connect sensor wire harness terminals between terminals 3 and 4.
(4) Turn ignition switch ON.

C
Read CTP switch signal on the TOYOTA hand-held tester.

OK **CTP switch signal: ON**

NG

OK → **Confirm good connection at sensor. If OK, replace throttle position sensor.**

2 **Check for open in harness or ECM.**

ON

*1: 3RZ-FE A/T
*2: 3RZ-FE M/T, 2RZ-FE

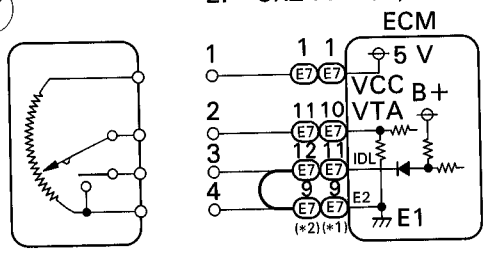

For 3RZ-FE M/T, 2RZ-FE

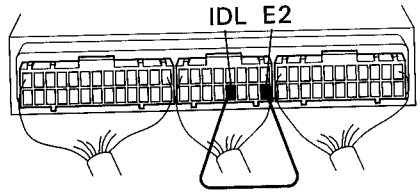

For 3RZ-FE A/T

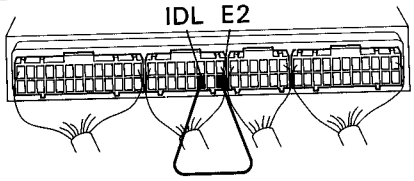

BE6653
P19556
P19711
P19687

P (1) Remove glove compartment. (See page EG-157).
(2) Connect between termianls IDL and E2 of ECM connector.

HINT: Throttle position sensor connector is disconnected. Before checking, do a visual check and contact pressure check for the connector. (See page IN-24).

(3) Turn ignition switch ON.

C Read CTP switch signal on the TOYOTA hand-held tester.

OK **CTP switch signal: ON**

NG

OK **Open in harness between ECM and throttle position sensor, repair or replace harness.**

Confirm connection at ECM. If OK, replace ECM.

OBD II scan tool (excluding TOYOTA hand-held tester)

1 **Check for open in harness or ECM.**

ON

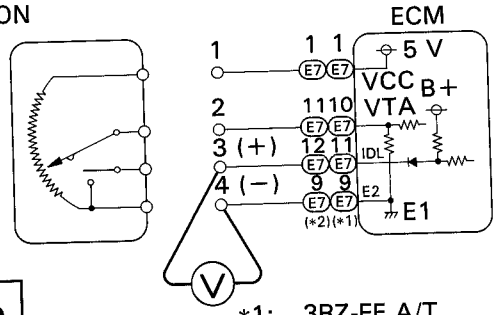

BE6653
P24209

*1: 3RZ-FE A/T
*2: 3RZ-FE M/T, 2RZ-FE

P (1) Disconnect the throttle position sensor connector.
(2) Turn ignition switch ON.

C Measure voltage between terminals 3 and 4 of throttle position sensor connector.

OK **Voltage: 9 – 14 V**

NG

OK **Confirm good connection at sensor. If OK, replace throttle position sensor.**

2 **Check for open in harness and connector between throttle position sensor and ECM (See page IN-24).**

OK

NG **Open in harness between ECM and throttle position sensor.**

Confirm connection at ECM. If OK, replace ECM.

DTC P1300 Igniter Circuit Malfunction

CIRCUIT DESCRIPTION

The ECM determines the ignition timing, turns on Tr_1 at a predetermined angle (°CA) before the desired ignition timing and outputs and ignition signal (IGT) "1" to the igniter.
Since the width of the IGT signal is constant, the dwell angle control circuit in the igniter determines the time the control circuit starts primary current flow to the ignition coil based on the engine rpm and ignition timing one revolution ago, that is, the time the Tr_2 turns on.
When it reaches the ignition timing, the ECM turns Tr_1 off and outputs the IGT signal "0".
This turns Tr_2 off, interrupting the primary current flow and generating a high voltage in the secondary coil which causes the spark plug to spark. Also, by the counter electromotive force generated when the primary current is interrupted, the igniter sends an ignition confirmation signal (IGF) to the ECM. The ECM stops fuel injection as a fail safe function when the IGF signal is not input to the ECM.

DTC No.	DTC Detecting Condition	Trouble Area
P1300	No IGF signal to ECM for 4 consecutive IGT signal during engine running	• Open or short in IGF or IGT circuit from igniter to ECM • Igniter • ECM

WIRING DIAGRAM

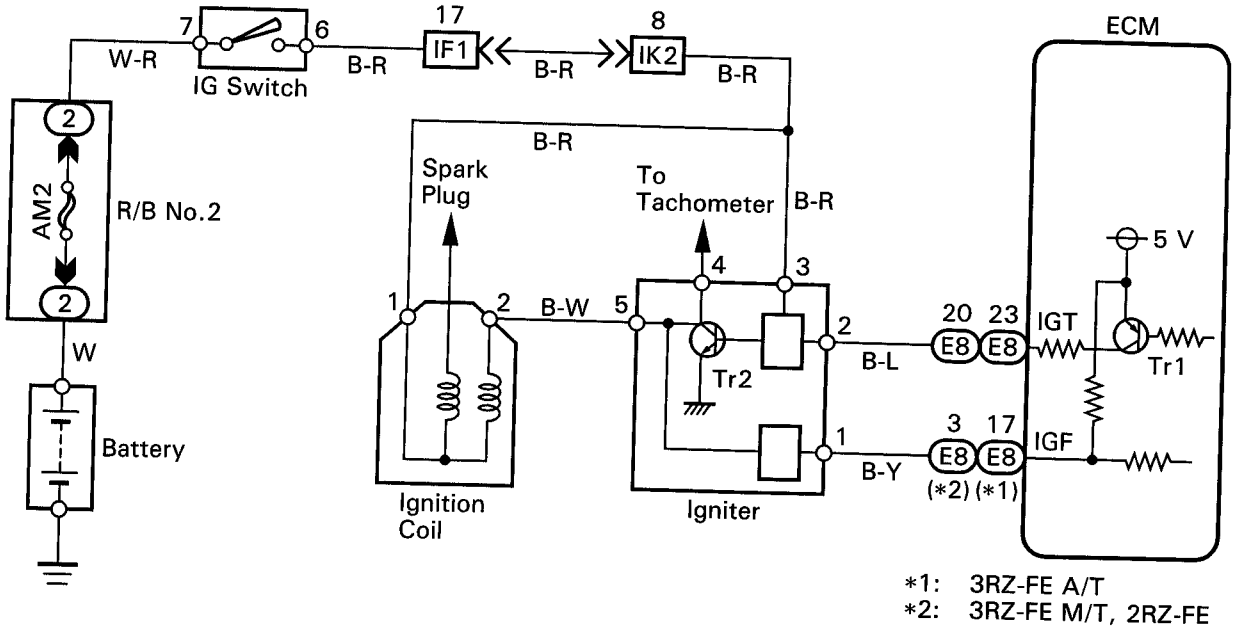

P23415

INSPECTION PROCEDURE

1 Check for spark (See page IG-2).

OK → NG: Go to step 4.

2 Check for open and short in harness and connector in IGF signal circuit between ECM and igniter (See page IN-24).

OK → NG: Repair or replace harness or connector.

3 Disconnect igniter connector and check voltage between terminal IGF of ECM connector and body ground.

ON

P
(1) Disconnect igniter connector.
(2) Remove glove compartment (See page EG-157).
(3) Turn ignition switch ON.

C Measure voltage between terminal IGF of ECM connector and body ground.

OK Voltage: 4.5 – 5.5 V

For 3RZ-FE M/T, 2RZ-FE

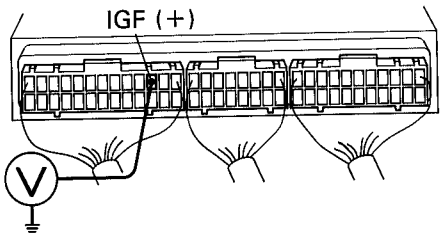

For 3RZ-FE A/T

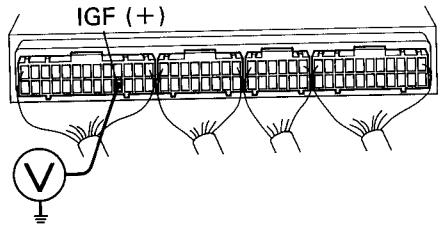

BE6653
P24210
P24211

NG → OK: Replace igniter.

Check and replace ECM (See page IN-29).

4 Check for open and short in harness and connector in IGT signal circuit between ECM and igniter (See page IN-24).

OK

NG → Repair or replace harness or connector.

5 Check voltage between terminal IGT of ECM connector and body ground.

EG

START

For 3RZ-FE M/T, 2RZ-FE

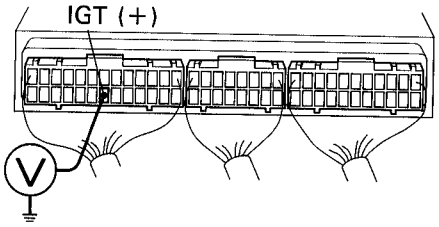

For 3RZ-FE A/T

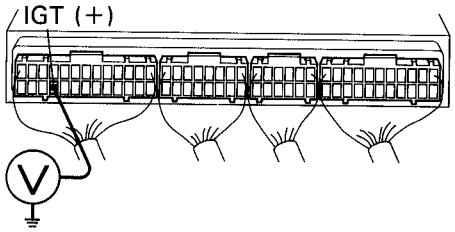

BE6653
P24212
P24213

P Remove glove compartment (See page EG-157).

C Measure voltage between terminal IGT of ECM connector and body ground when engine is cranked.

OK **Voltage: More than 0.1 V and less than 4.5 V**

Reference INSPECTION USING OSCILLOSCOPE

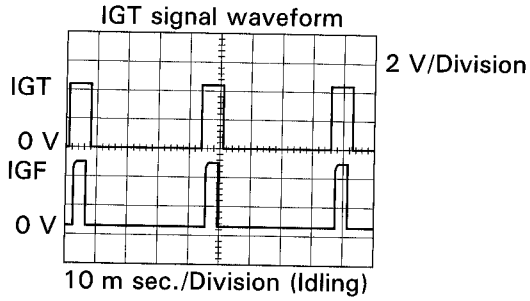

FI6680

- During cranking or idling, check waveform between terminals IGT and E1 of ECM.

HINT: The correct rectangular waveform is as shown.

OK

NG → Check and replace ECM (See page IN-29).

6 Disconnect igniter connector and check voltage between terminal IGT of ECM connector and body ground.

START

For 3RZ-FE M/T, 2RZ-FE

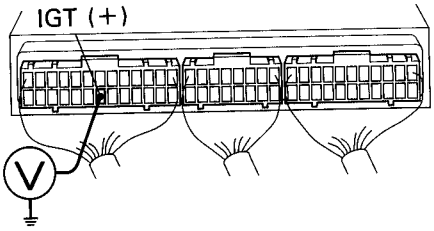

For 3RZ-FE A/T

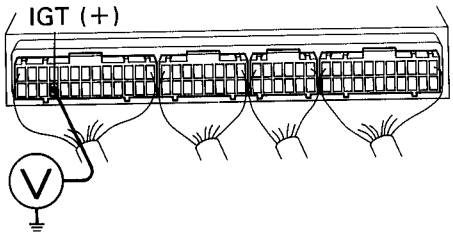

BE6653
P24212
P24213

P Disconnect igniter connector.

C Measure voltage between terminal IGT of ECM connector and body ground when engine is cranked.

OK **Voltage: More than 0.1 V and less than 4.5 V**

NG

OK → **Check and replace ECM (See page IN-29).**

7 Check voltage between terminal 3 of igniter connector and body ground.

ON ⇨ STRAT

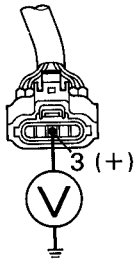

BE6653
P24215

P Disconnect igniter connector.

C Measure voltage between terminal 3 of igniter connector and body ground, when ignition switch is turned to "ON" and "STA" position.

OK **Voltage: 9 – 14 V**

OK

NG → **Check and repair igniter power source circuit.**

8 Check for open and short in harness and connector between ignition switch and ignition coil, ignition coil and igniter (See page IN-24).

OK

NG → **Repair or replace harness or connector.**

9 Check ignition coil (See page IG-5).

OK

NG → **Replace ignition coil.**

Replace igniter.

DTC P1335 Crankshaft Position Sensor Circuit Malfunction (during engine running)

CIRCUIT DESCRIPTION

Refer to "Crankshaft Position Sensor "A" Circuit Malfunction" on Page EG-238.

DTC No.	DTC Detecting Condition	Trouble Area
P1335	No crankshaft position sensor signal to ECM with engine speed 1,000 rpm or more	• Open or short in crankshaft position sensor circuit • Crankshaft position sensor • ECM

See DTC P0335 for Wiring Diagram and Inspection Procedure.

DTC P1500 Starter Signal Circuit Malfunction

CIRCUIT DESCRIPTION

When the engine is cranked, the intake air flow is slow, so fuel vaporization is poor. A rich mixture is therefore necessary in order to achieve good startability. While the engine is being cranked, the battery voltage is applied to terminal STA of the ECM. The starter signal is mainly used to increase the fuel injection volume for the starting injection control and after-start injection control.

DTC No.	DTC Detecting Condition	Trouble Area
P1500	No starter signal to ECM	• Open or short in starter signal circuit • Open or short in ignition switch or starter relay ciurcuit • ECM

HINT: In this circuit, diagnosis can only be made in the check mode.

WIRING DIAGRAM

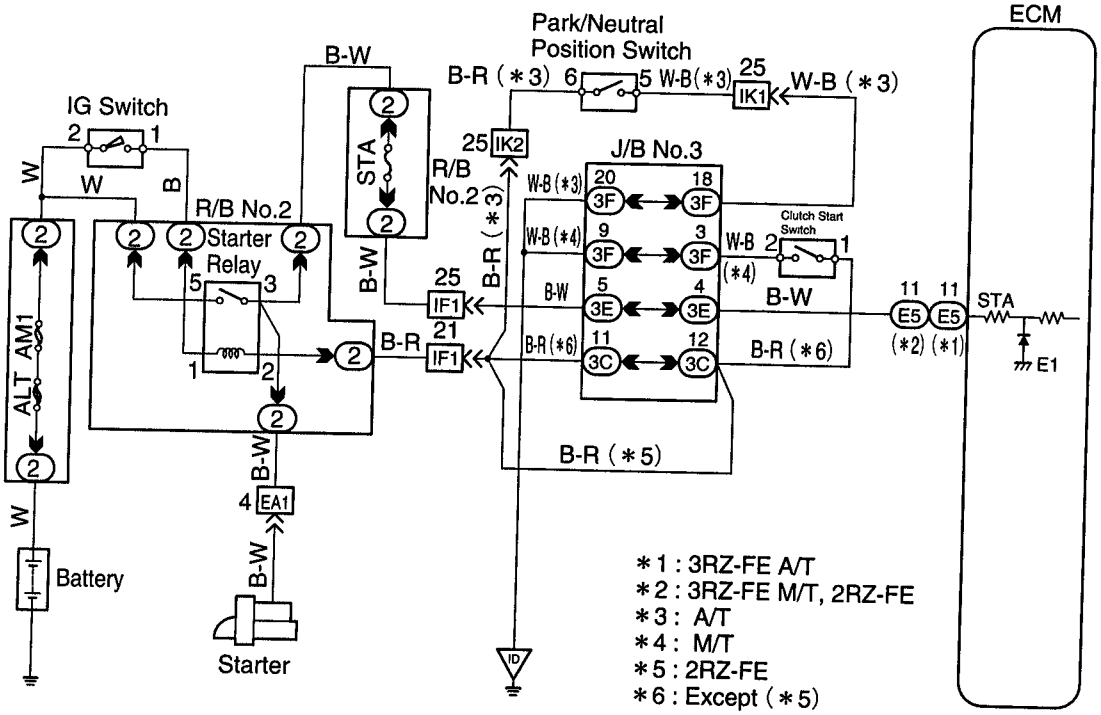

S00304

INSPECTION PROCEDURE

HINT: This inspection procedure is based on the premise that the engine is cranked normally. If the engine is not cranked, proceed to the matrix chart of problem symptoms on page EG-207.

1 **Connect the TOYOTA hand-held tester and check STA signal.**

P (1) Connect the TOYOTA hand-held tester to the DLC3.
(2) Turn ignition switch ON and TOYOTA hand-held tester main switch ON.

C Read STA signal on the TOYOTA hand-held tester while starter operates.

OK

Ignition Switch Position	ON	START
STA Signal	OFF	ON

NG

OK → **Proceed to next circuit inspection shown on matrix chart (See page EG-207).**

2 **Check for open in harness and connector between ECM and starter relay (See page IN-24).**

OK

NG → **Repair or replace harness or connector.**

Check and replace ECM (See page IN-29).

DTC P1600 ECM BATT Malfunction

CIRCUIT DESCRIPTION

Battery voltage is supplied terminal BATT of the ECM even when the ignition switch is OFF for use by the DTC memory and air-fuel ratio adaptive control value memory, etc.

DTC No.	DTC Detecting Condition	Trouble Area
P1600	Open in back up power source circuit	• Open in back up power source circuit • ECM

HINT: If DTC P1600 appear, the ECM does not store another DTC.

WIRING DIAGRAM

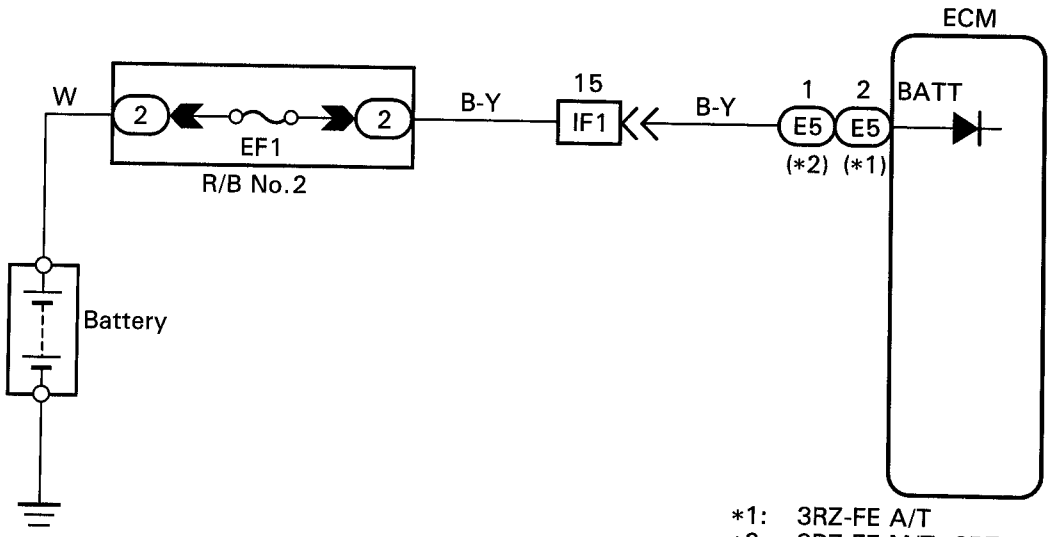

P23417

*1: 3RZ-FE A/T
*2: 3RZ-FE M/T, 2RZ-FE

INSPECTION PROCEDURE

1 **Check voltage between terminal BATT of ECM connector and body ground.**

LOCK

P Remove glove compartment (See page EG-157).

C Measure voltage between terminal BATT of ECM connector and body ground.

OK **Voltage: 9 – 14 V**

For 3RZ-FE M/T, 2RZ-FE

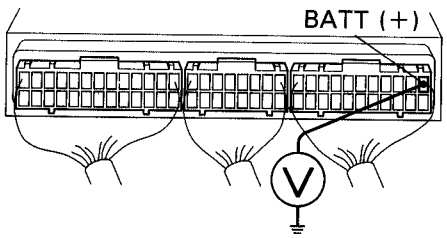

For 3RZ-FE A/T

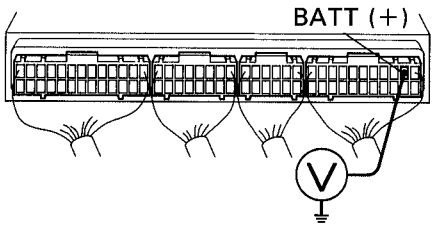

BE6653
P24216
P24217

NG

OK **Check and replace ECM (See page IN-29).**

2	Check EFI fuse.

P Remove EFI fuse from R/B No.2.

C Check continuity of EFI fuse.

OK Continuity

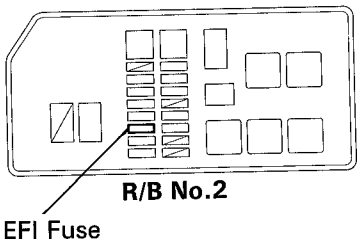

P23367

OK

NG → **Check for short in all the harness and components connected to EFI fuse.**

Check and repair harness or connector between battery, EFI fuse and ECM.

DTC P1780 Park/Neutral Position Switch Malfunction

CIRCUIT DESCRIPTION

The park/neutral position switch goes on when the shift lever is in the N or P shift position. When it goes on terminal NSW of the ECM is grounded to body ground via the starter relay thus the terminal NSW voltage becomes 0 V. When the shift lever is in the D, 2, L or R position, the park/neutral position switch goes off, so the voltage of ECM terminal NSW becomes battery positive voltage, the voltage of the ECM internal power source.

If the shift lever is moved from the N position to the D position, this signal is used for air-fuel ratio correction and for idle speed control (estimated control), etc.

DTC No.	DTC Detecting Condition	Trouble Area
P1780	2 or more switches are ON simultaneously for "N", "2" and "L" position (2 trip detection logic)	• Short in park/neutral position switch circuit • Park/neutral position switch • ECM
	When driving under conditions (a) and (b) for 30 sec. or more the park/neutral position switch is ON (N position) (2 trip detection logic) (a) Vehicle speed: 70 km/h (44 mph) or more (b) Engine speed: 1,500 ~ 2,500 rpm	

HINT: After confirming DTC P1780 use the TOYOTA hand-held tester to confirm the PNP switch signal from "CURRENT DATA".

WIRING DIARAM

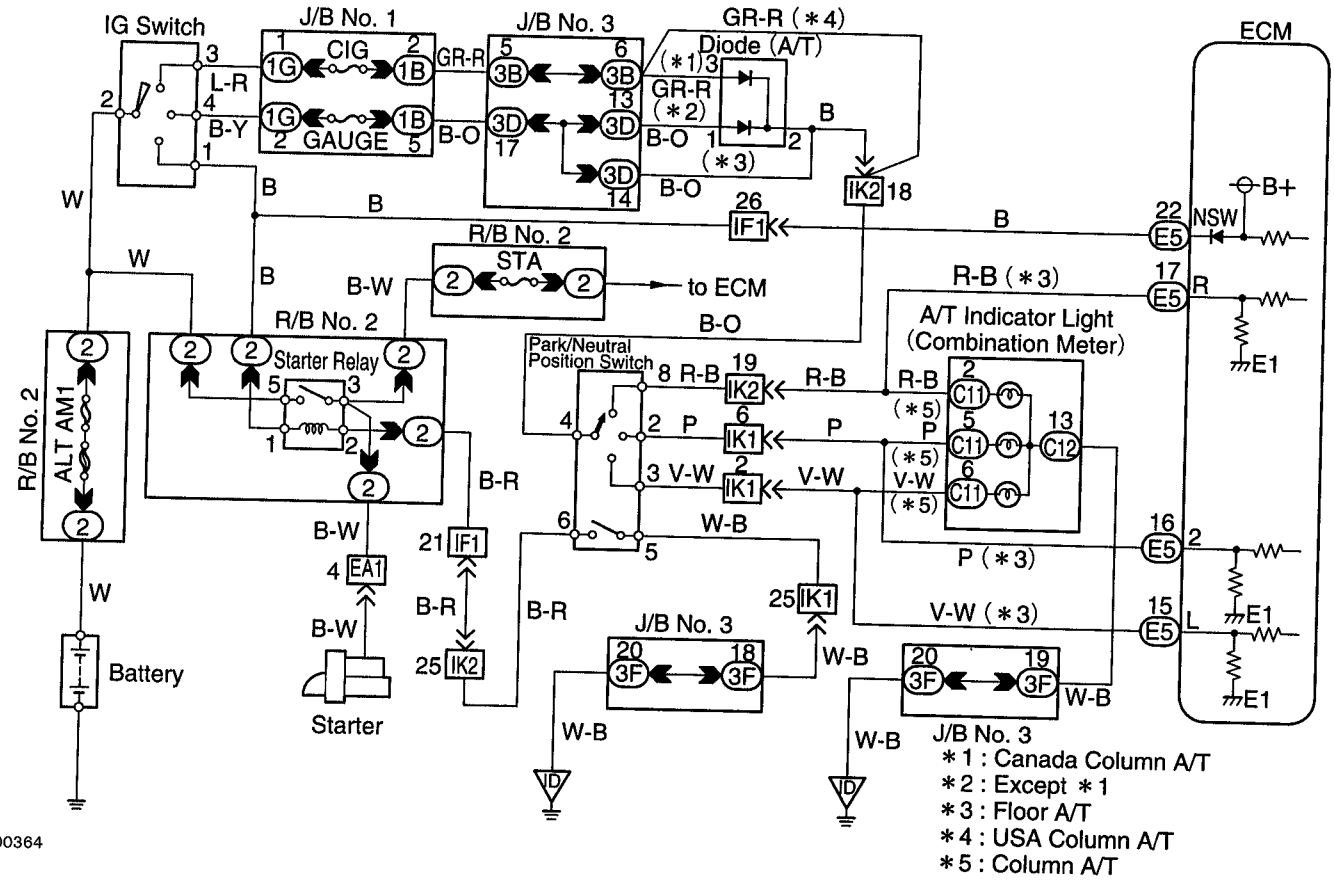

S00364

INSPECTION PROCEDURE

1 **Check park/neutral position switch.**

P Disconnect park/neutral position switch connector.

C Check continuity between each terminal shown below when the shift lever is positioned to each range.

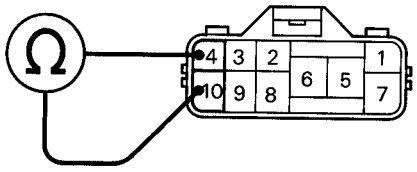

OK

○—○ Continuity

Shift Position \ Terminal	6	5	4	7	8	10	9	2	3
P	○—○		○—○						
R			○	——	○				
N	○—○		○	——	——	○			
D			○	——	——	——	○		
2			○	——	——	——	——	○	
L			○	——	——	——	——	——	○

P24214

OK

NG **Replace park/neutral position switch.**

2 **Check voltage between terminal NSW of ECM connector and body ground.**

ON

For 2RZ-FE A/T

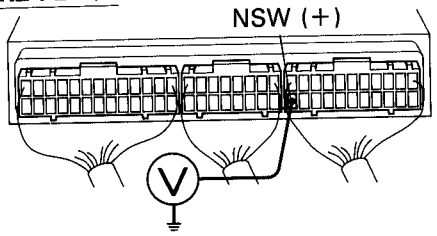

For 3RZ-FE A/T

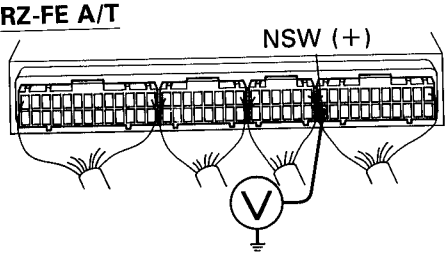

BE6653
P24218
P24219

P (1) Remove glove compartment (See page EG-157).
(2) Turn ignition switch ON.

C Measure voltage between terminal NSW of ECM connector and body ground after the shift lever is moved to the following positions.

OK

Shift lever position	P or N	L, 2, D or R
Voltage	0 – 3 V	9 – 14 V

NG

Check for open and short in harness and connector between ECM and park/neutral position switch (See page IN-24).

OK

Check and replace ECM (See page IN-29).

EG

ECM Power Source Circuit

CIRCUIT DESCRIPTION

When the ignition switch is turned ON, battery positive voltage is applied to the coil, closing the contacts of the EFI relay and supplying power to the terminal +B of the ECM.

WIRING DIAGRAM

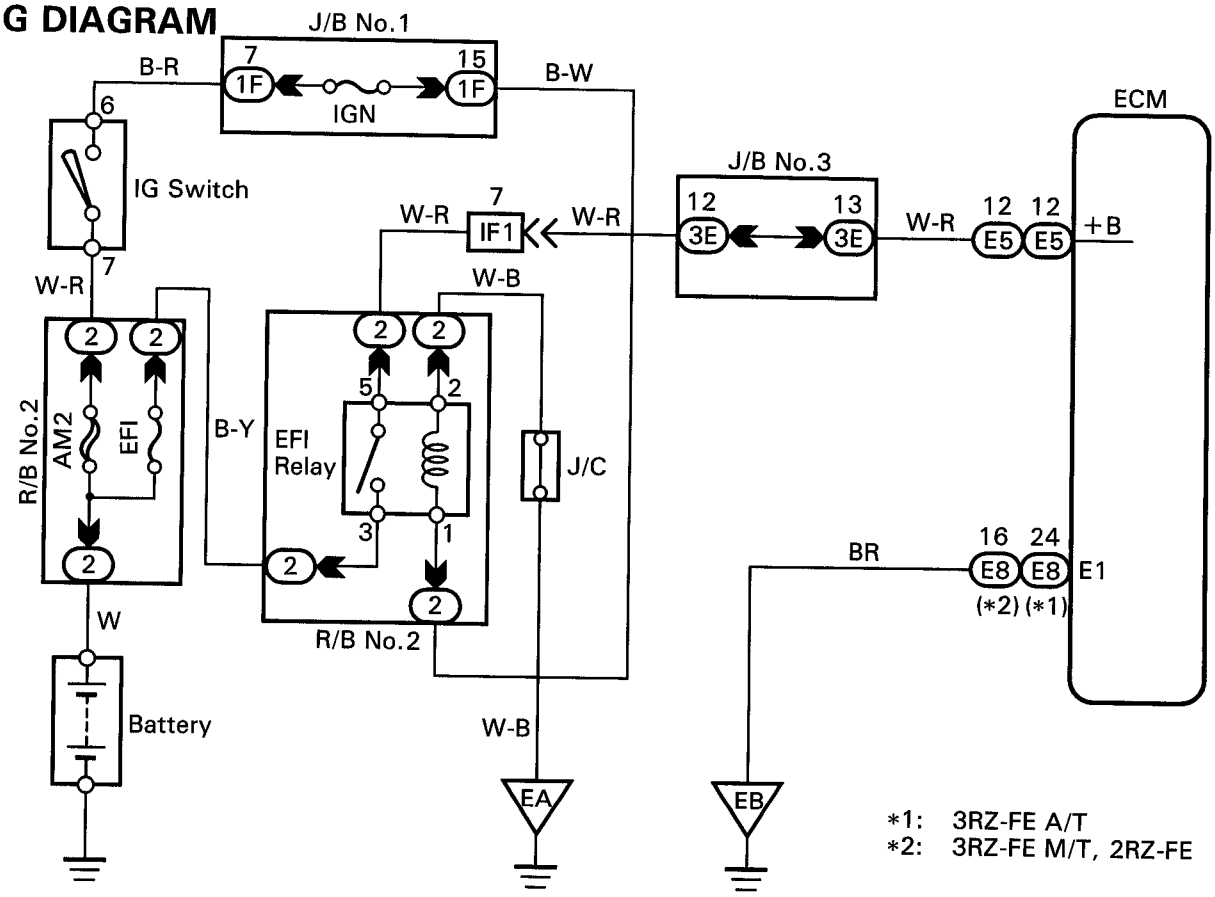

P23419

INSPECTION PROCEDURE

1 **Check voltage between terminals +B and E1 of ECM connector.**

ON

For 3RZ-FE M/T, 2RZ-FE

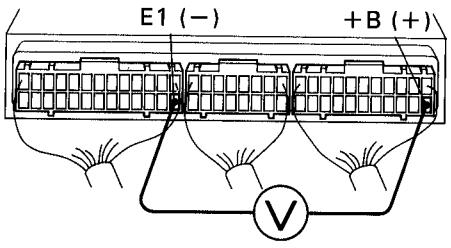

For 3RZ-FE A/T

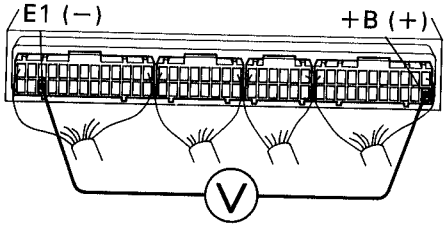

BE6653
P24220
P24221

P (1) Remove glove compartment (See page EG-157).
(2) Turn ignition switch ON.

C Measure voltage between terminals +B and E1 of ECM connector.

OK **Voltage: 9 – 14 V**

NG

OK → **Proceed to next circuit inspection shown on matrix chart (See page EG-207).**

2 Check for open in harness and connector between terminal E1 of ECM and body ground (See page IN-24).

OK → NG: Repair or replace harness or connector.

3 Check EFI relay (See page EG-146).

OK → NG: Replace EFI relay.

4 Check EFI fuse (See page EG-289, step [2]).

OK → NG: Check for short in all the harness and components connected to EFI fuse.

5 Check for open in harness and connector between EFI relay and battery, EFI relay and ECM (See page IN-24).

OK → NG: Repair or replace harness or connetor.

6 Check IGN fuse.

P Remove IGN fuse from J/B No.1.

C Check continuity of IGN fuse.

OK Continuity

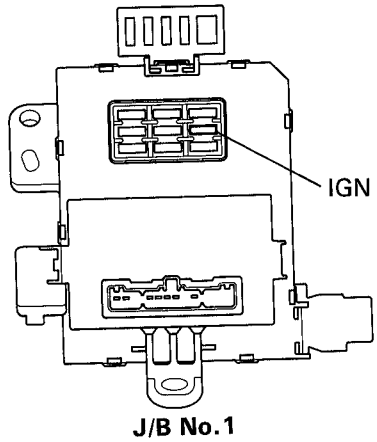

P23368

OK → NG: Check for short in all the harness and components connected to IGN fuse.

7	Check ignition switch (See page BE-4).

OK

NG → Replace ignition switch.

Check for open in harness and connector between IG switch and EFI relay, EFI relay and body ground (See page IN-24).

Fuel Pump Control Circuit

CIRCUIT DESCRIPTION

In the diagram below, when the engine is cranked, current flows from terminal ST of the ignition switch to the starter relay coil, the starter relay switches on and current flows to coil L1 of the circuit opening relay. Thus the circuit opening relay switches on, power is supplied to the fuel pump and the fuel pump operates.

When the STA signal and NE signal are input to the ECM, Tr is turned ON, current flows to coil L2 of the circuit opening relay, the relay switches on and the fuel pump operates.
While the NE signal is generated (engine running), the ECM keeps Tr ON (circuit opening relay ON) and the fuel pump also keeps operating.

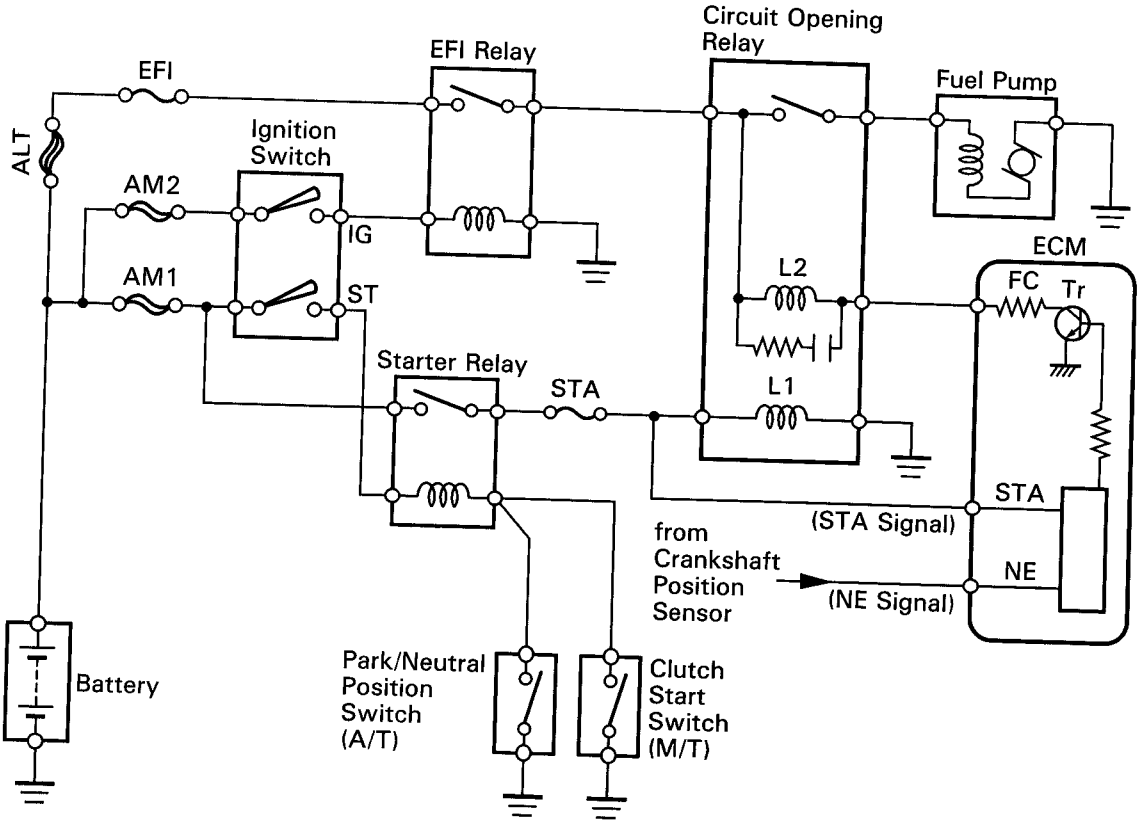

P23421

WIRING DIAGRAM

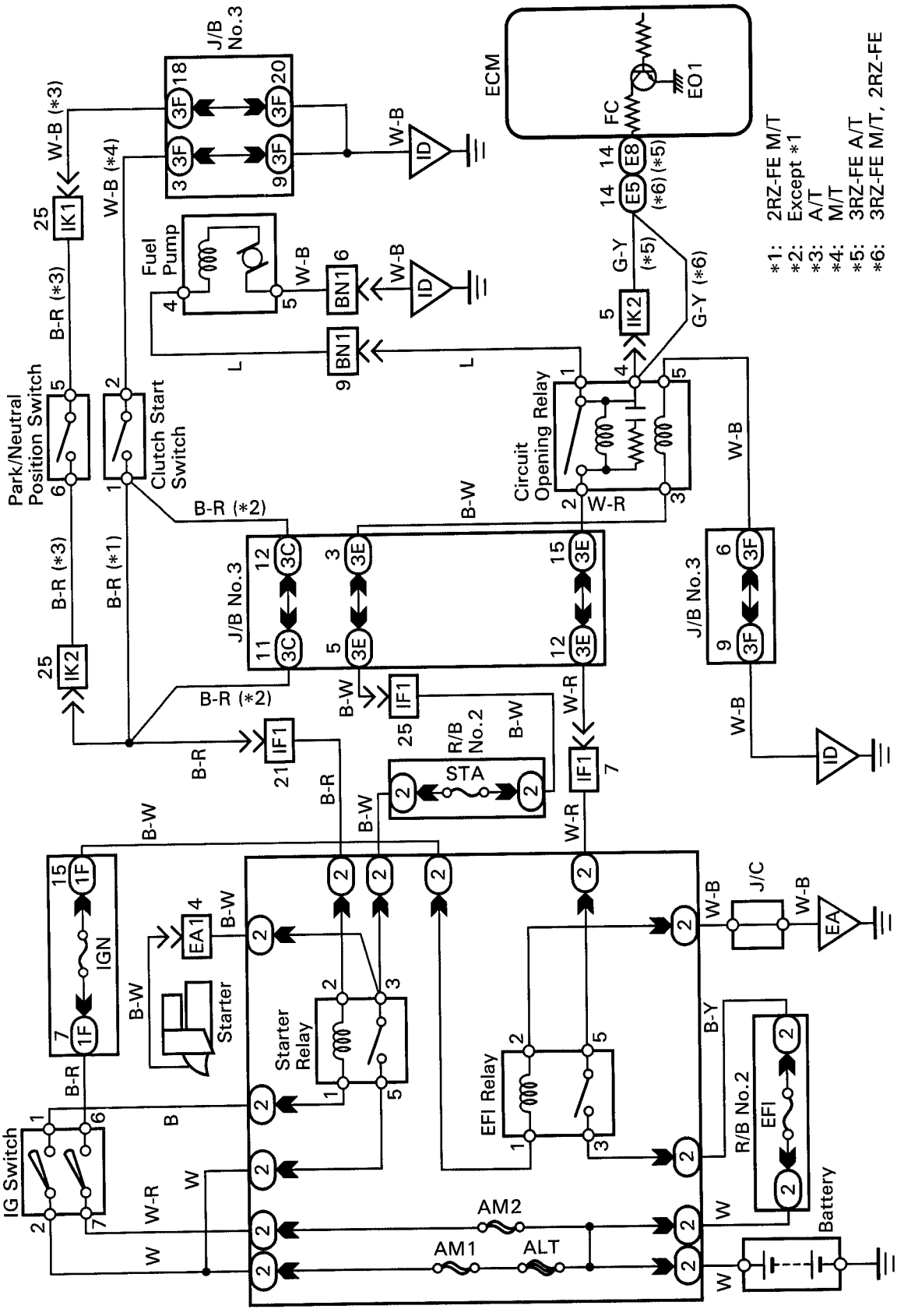

P23422

INSPECTION PROCEDURE

TOYOTA hand-held tester

1 **Connect the TOYOTA hand-held tester and check operation of fuel pump.**

ON

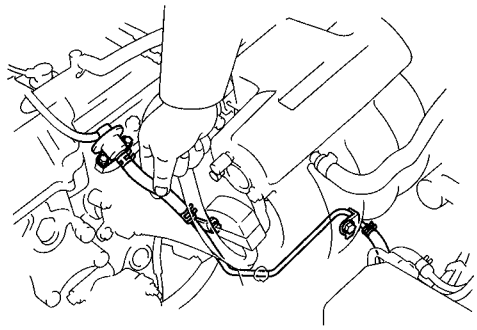

BE6653
P25111

P (1) Connect the TOYOTA hand-held tester to the DLC3.
(2) Turn ignition switch ON and TOYOTA hand-held tester main switch ON.
(3) Select the ACTIVE TEST mode on the TOYOTA hand-held tester.

C Check for fuel pressure in the return hose when it is pinched off.

OK **There is prssure in the return hose.**

HINT: At this time, you will hear fuel return noise.

NG

OK → **Go to step 7 .**

2 **Check for ECM power source circuit (See page EG-291).**

OK

NG → **Repair or replace.**

3 **Check circuit opening relay.**

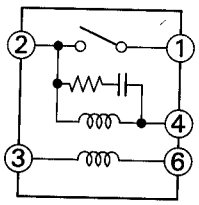

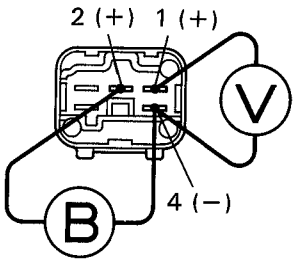

FI7053 P24222

P (1) Remove ciucuit opening relay (See page EG-147).

C (1) Apply battery positive voltage between terminals 2 and 4.
(2) Measure voltage between terminals 1 and 4.

OK

Terminals 1 and 4	Same as battery

OK

NG → **Replace circuit opening relay.**

4 Check voltage between terminal FC of ECM and body ground.

ON

P (1) Remove glove compartment (See page EG-157).
(2) Turn ignition switch ON.

For 3RZ-FE M/T, 2RZ-FE

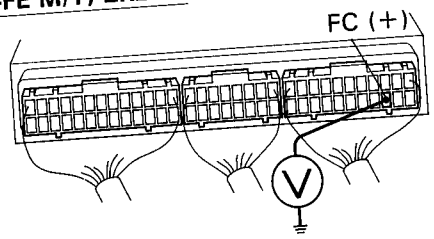

C Measure voltage between terminal FC of ECM and body ground.

OK Voltage: 9 – 14 V

For 3RZ-FE A/T

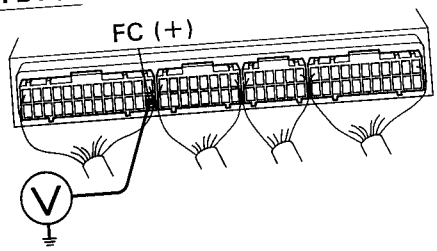

BE6653
P24224
P24225

OK

NG Check for open in harness and connector between EFI relay and circuit opening relay, circuit opening relay and ECM.

5 Check fuel pump (See page EG-126).

OK

NG Repair or replace fuel pump.

6 Check for open in harness and connector between circuit opening relay and fuel pump, fuel pump and body ground (See page IN-24).

OK

NG Repair or replace harness or connector.

Check and replace ECM.

7 **Check circuit opening relay.**

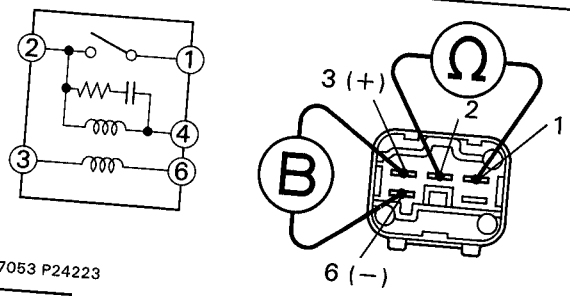

FI7053 P24223

P Remove circuit opening relay (See page EG-147).

C (1) Apply battery positive voltage between terminals 3 and 6.
(2) Check continuity between terminals 1 and 2.

OK

Terminals 1 and 2	Continuity

OK

NG **Replace circuit opening relay.**

8 **Check voltage between terminal 3 of circuit opening relay connector and body ground.**

START

C Measure voltage between terminal 3 of circuit opening relay connector and body ground when engine is cranked.

OK **Voltage: 9 – 14 V**

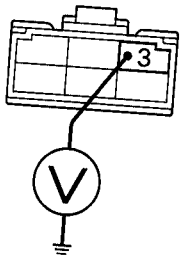

BE6653
P24226

OK

NG **Check for starter signal circuit (See page EG-286).**

Check for open in harness and connector between terminal 6 of circuit opening relay connector and body ground (See page IN-24).

OBD Ⅱ scan tool (excluding TOYOTA hand-held tester)

1 **Check fuel pump operation.**

ON

For 3RZ-FE M/T, 2RZ-FE

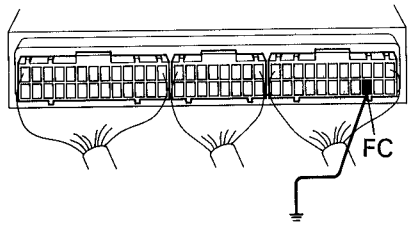

For 3RZ-FE A/T

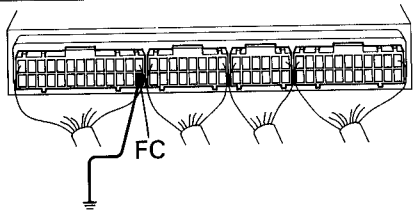

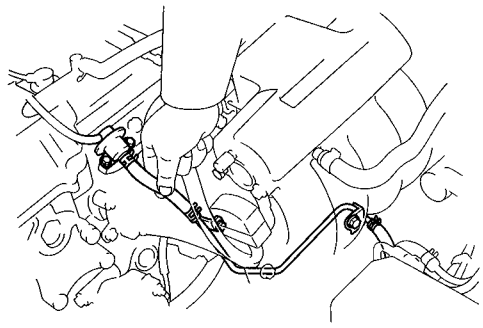

BE6653
P19784
P19783
P25111

P (1) Remove glove compartment (See page EG-157).
(2) Turn ignition switch ON.

C (1) Connect between terminal FC of ECM and body ground.
(2) Check for fuel pressure in the return hose when it is pinched off.

OK **There is pressure in the return hose.**

HINT: At this time, you will hear fuel return noise.

NG → **OK** → Go to step 7 .

2 **Check for ECM power source circuit (See page EG-291).**

OK → **NG** → **Repair or replace.**

3 **Check circuit opening relay (See page EG-296, step 3).**

OK → **NG** → **Replace circuit opening relay.**

4 Check voltage between terminal FC of ECM and body ground (See page EG-297, step 4).

OK → NG: Check for open in harness and connector between EFI relay and circuit opening relay, circuit opening relay and ECM.

5 Check fuel pump (See page EG-126).

OK → NG: Repair or replace fuel pump.

6 Check for open in harness and connector between circuit opening relay and fuel pump, fuel pump and body ground (See page IN-24).

OK → NG: Repair or replace harness or connector.

Check and replace ECM.

7 Check circuit opening relay (See page EG-298, step 7).

OK → NG: Replace circuit opening replay.

8 Check voltage between terminal 3 of circuit opening relay connector and body ground (See page EG-298, step 8).

OK → NG: Check for starter signal circuit (See page EG-286).

Check for open in harness and connector between terminal 6 of circuit opening relay connector and body ground (See page IN-24).

5VZ-FE ENGINE

ENGINE MECHANICAL
- PREPARATION ..... EG- 2
- IDLE AND/OR 2,500 RPM CO/HC CHECK ..... EG- 5
- COMPRESSION CHECK ..... EG- 7
- VALVE CLEARANCE INSPECTION AND ADJUSTMENT ..... EG- 8
- IGNITION TIMING INSPECTION ..... EG- 13
- IDLE SPEED INSPECTION ..... EG- 14
- TIMING BELT ..... EG- 15
- CYLINDER HEADS ..... EG- 27
- CYLINDER BLOCK ..... EG- 60
- EXHAUST SYSTEM ..... EG- 98
- SERVICE SPECIFICATIONS EG-100

EMISSION CONTROL SYSTEMS
- SYSTEM PURPOSE EG-106
- PREPARATION EG-106
- LAYOUT AND SCHEMATIC DRAWING EG-107
- POSITIVE CRANKCASE VENTILATION (PCV) SYSTEM EG-108
- EVAPORATIVE EMISSION (EVAP) CONTROL SYSTEM EG-109
- EXHAUST GAS RECIRCULATION (EGR) SYSTEM EG-111
- THREE-WAY CATALYTIC CONVERTER (TWC) SYSTEM EG-115
- SERVICE SPECIFICATIONS EG-116

SFI SYSTEM
- PRECAUTION EG-117
- PREPARATION EG-120
- FUEL PUMP EG-121
- FUEL PRESSURE REGULATOR EG-126
- INJECTOR EG-129
- FUEL TANK AND LINE EG-134
- MASS AIR FLOW (MAF) METER EG-136
- THROTTLE BODY EG-137
- IDLE AIR CONTROL (IAC) VALVE EG-142
- EFI MAIN RELAY EG-145
- CIRCUIT OPENING RELAY EG-146
- VSV FOR EVAP EG-147
- VSV FOR FUEL PRESSURE CONTROL EG-148
- VSV FOR EGR (2WD/0.5 ton) EG-149
- VSV FOR VAPOR PRESSURE SENSOR EG-150
- A/C IDLE-UP VALVE (w/ A/C) EG-151
- ENGINE COOLANT TEMPERATURE (ECT) SENSOR EG-153
- KNOCK SENSOR EG-155
- EGR GAS TEMPERATURE SENSOR (2WD/0.5 ton) EG-159
- HEATED OXYGEN SENSOR EG-159
- VAPOR PRESSURE SENSOR EG-160
- ENGINE CONTROL MODULE (ECM) EG-161
- FUEL CUT RPM EG-161
- SERVICE SPECIFICATIONS EG-162

COOLING SYSTEM
- PREPARATION EG-164
- COOLANT CHECK EG-164
- COOLANT REPLACEMENT EG-165
- WATER PUMP EG-166
- THERMOSTAT EG-170
- RADIATOR EG-172
- SERVICE SPECIFICATIONS EG-175

LUBRICATION SYSTEM
- PREPARATION EG-176
- OIL PRESSURE CHECK EG-177
- OIL AND FILTER REPLACEMENT EG-178
- OIL PUMP EG-180
- OIL COOLER EG-189
- SERVICE SPECIFICATIONS EG-190

ENGINE TROUBLESHOOTING EG-192

ENGINE MECHANICAL

PREPARATION

EGOEG-08

SST (SPECIAL SERVICE TOOLS)

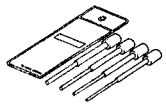	09201-10000 Valve Guide Bushing Remover & Replacer Set	
	(09201-01060) Valve Guide Bushing Remover & Replacer 6	
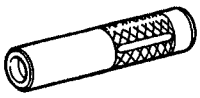	09201-41020 Valve Stem Oil Seal Replacer	
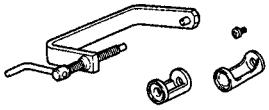	09202-70020 Valve Spring Compressor	
	09213-54015 Crankshaft Pulley Holding Tool	
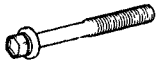	(90119-08216) Bolt	
	09222-30010 Connecting Rod Bushing Remover & Replacer	
	09223-15030 Oil Seal & Bearing Replacer	Crankshaft rear oil seal
	09228-07501 Oil Filter Wrench	
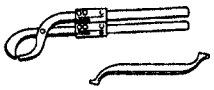	09248-55040 Valve Clearance Adjust Tool Set	
	(09248-05410) Valve Lifter Press	
	(09248-05420) Valve Lifter Stopper	

	09330-00021 Companion Flange Holding Tool	Crankshaft pulley
	09816-30010 Oil Pressure Switch Socket	Oil pressure switch
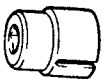	09817-16011 Back-up Light Switch Tool	Knock sensor
	09843-18020 Diagnosis Check Wire	
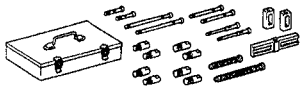	09950-50010 Puller C Set	
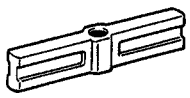	(09951-05010) Hanger 150	Crankshaft pulley Crankshaft timing pulley
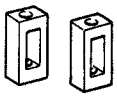	(09952-05010) Slide Arm	Crankshaft pulley Crankshaft timing pulley
	(09953-05020) Center Bolt 150	Crankshaft pulley Crankshaft timing pulley
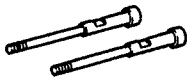	(09954-05010) Claw No.1	Crankshaft timing pulley
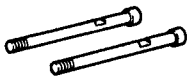	(09954-05030) Claw No.3	Crankshaft pulley
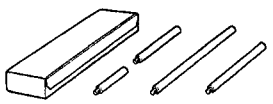	09950-70010 Handle Set	
	(09951-07150) Handle 150	Crankshaft rear oil seal Valve guide bushing
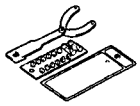	09960-10010 Variable Pin Wrench Set	
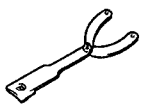	(09962-01000) Variable Pin Wrench Arm Assy	Camshaft timing pulley Camshaft sub-gear

EG

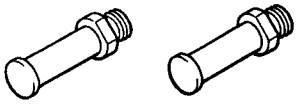	(09963-01000) Pin 10	Camshaft timing pulley
	(09963-00600) Pin 6	Camshaft sub-gear

EG1DN-05

RECOMMENDED TOOLS

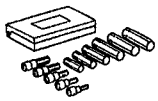	09040-00010 Hexagon Wrench Set .	
	09090-04010 Engine Sling Device .	For suspending engine
	09200-00010 Engine Adjust Kit .	
	09258-00030 Hose Plug Set .	Plug for the vaccum hose, fuel hose etc.
	09904-00010 Expander Set .	

EG1DP-06

EQUIPMENT

Caliper gauge	
CO/HC meter	
Compression gauge	
Connecting rod aligner	
Cylinder gauge	
Dial indicator	
Dye penetrant	
Timing light	Ignition timing
OBD II scan tool	Engine speed
Heater	
Magnetic finger	
Micrometer	
Piston ring compressor	
Piston ring expander	
Plastigage	
Precision straight edge	
Soft brush	
Spring tester	Valve spring
Steel square	Valve spring
Thremometer	

Torque wrench	
Valve seat cutter	
Vernier calipers	

SSM (SPECIAL SERVICE MATERIALS)

EG1DQ–07

08826–00080	Seal Packing Black or equivalent (FIPG)	Camshaft bearing cap Cylinder head cover Rear oil seal retainer
08826–00100	Seal Packing 1282B, THREE BOND 1282B or equivalent (FIPG)	Water bypass pipe
08833–00070	Adhesive 1324, THREE BOND 1324 or equivalent	Flywheel bolt Drive plate bolt Spark plug tube
08833–00080	Adhesive 1344, THREE BOND 1344, LOCTITE 242 or equivalent	Oil pressure sender gauge

IDLE AND/OR 2,500 RPM CO/HC CHECK

EG5YA–01

HINT: This check is used only to determine whether or not the idle CO/HC complies with regulations.

1. **INITIAL CONDITIONS**

(a) Engine at normal operating temperature
(b) Air cleaner installed
(c) All pipes and hoses of air induction system connected
(d) All accessories switched OFF
(e) All vacuum lines properly connected
HINT: All vacuum hoses for EGR systems, etc. should be properly connected.
(f) SFI system wiring connectors fully plugged
(g) Ignition timing checked correctly
(h) Transmission in neutral position
(i) Tachometer and CO/HC meter calibrated by hand

2. **START ENGINE**
3. **RACE ENGINE AT 2,500 RPM FOR APPROX. 180 SECONDS**

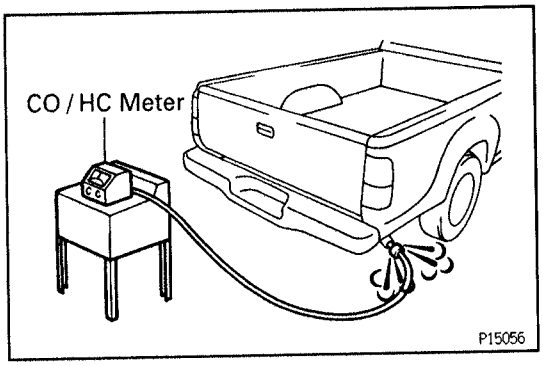

4. **INSERT CO/HC METER TESTING PROBE AT LEAST 40 cm (1.3 ft) INTO TAILPIPE DURING IDLING**
5. **IMMEDIATELY CHECK CO/HC CONCENTRATION AT IDLE AND/OR 2,500 RPM**

HINT: When doing the 2 mode (2,500 rpm and idle) test, follow the measurement order prescribed by the applicable local regulations.

Troubleshooting

If the CO/HC concentration does not comply with regulations, troubleshoot in the order given below.
See the table below for possible causes, and then inspect and correct the applicable causes if necessary.

CO	HC	Symptom	Causes
Normal	High	Rough idle	1. Faulty ignitions: • Incorrect timing • Fouled, shorted or improperly gapped plugs • Open or crossed high-tension cords 2. Incorrect valve clearance 3. w/ EGR: Leaky EGR valve 4. Leaky intake and exhaust valves 5. Leaky cylinder
Low	High	Rough idle (Fluctuating HC reading)	1. Vacuum leaks: • PCV hose • w/ EGR: EGR valve • Intake manifold • Air intake chamber • Intake air connector • Throttle body • IAC valve • Brake booster line 2. Lean mixture causing misfire
High	High	Rough idle (Black smoke from exhaust)	1. Restricted air filter 2. Plugged PCV valve 3. Faulty SFI systems: • Faulty fuel pressure regulator • Clogged fuel return line • Defective ECT sensor • Faulty ECM • Faulty injector • Faulty throttle position sensor • Faulty MAF meter

V06207

COMPRESSION CHECK

EG593-01

HINT: If there is lack of power, excessive oil consumption or poor fuel economy, measure the compression pressure.

1. **WARM UP AND STOP ENGINE**
   Allow the engine to warm up to normal operating temperature.
2. **REMOVE IGNITION COILS**
   (See ignition coil removal in Ignition System)
3. **REMOVE SPARK PLUGS**
   Using a 16 mm plug wrench, remove the 6 spark plugs.
4. **CHECK CYLINDER COMPRESSION PRESSURE**

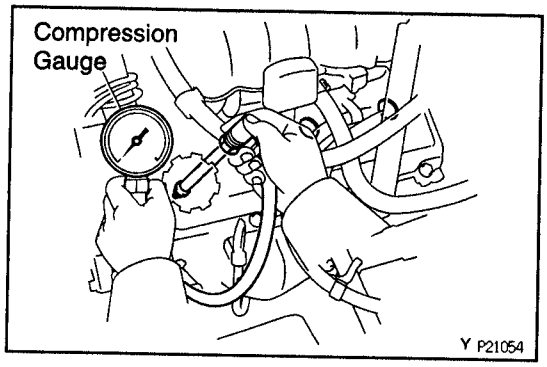

(a) Insert a compression gauge into the spark plug hole.
(b) Fully open the throttle.
(c) While cranking the engine, measure the compression pressure.
HINT: Always use a fully charged battery to obtain engine speed of 250 rpm or more.
(d) Repeat steps (a) through (c) for each cylinder.
NOTICE: This measurement must be done in as short a time as possible.
Compression pressure:
1,200 kPa (12.2 kgf/cm², 174 psi) or more
Minimum pressure:
1,000 kPa (10.2 kgf/cm², 145 psi)
Difference between each cylinder:
100 kPa (1.0 kgf/cm², 15 psi) or less
(e) If the cylinder compression in 1 or more cylinders is low, pour a small amount of engine oil into the cylinder through the spark plug hole and repeat steps (a) through (c) for cylinders with low compression.
- If adding oil helps the compression, it is likely that the piston rings and/or cylinder bore are worn or damaged.
- If pressure stays low, a valve may be sticking or seating is improper, or there may be leakage past the gasket.

5. **REINSTALL SPARK PLUGS**
6. **INSTALL IGNITION COILS**
   (See ignition coil installation in Ignition System)

EG

VALVE CLEARANCE INSPECTION AND ADJUSTMENT

EG5AT–02

HINT: Inspect and adjust the valve clearance when the engine is cold.

1. **DRAIN ENGINE COOLANT**
2. **REMOVE INTAKE AIR CONNECTOR**
   (See steps 7, 8 and 10 to 13 in cylinder head removal)
3. **REMOVE CYLINDER HEAD COVERS**
   (See steps 14 and 23 in cylinder head removal)
4. **SET NO.1 CYLINDER TO TDC/COMPRESSION**

(a) Turn the crankshaft pulley, and align its groove with the timing mark "0" of the No.1 timing belt cover.

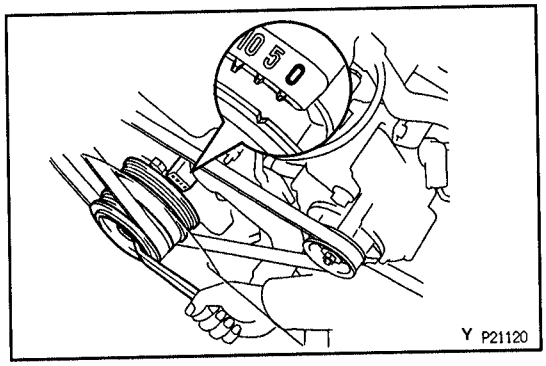

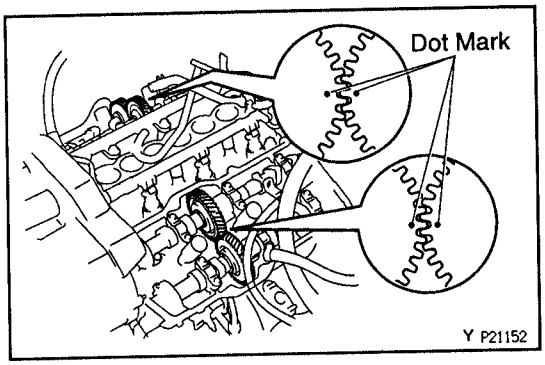

(b) Check that the timing marks (1 dot) of the camshaft drive and driven gears are in straight line on the cylinder heads surface as shown in the illustration.
If not, turn the crankshaft 1 revolution (360°) and align the marks.

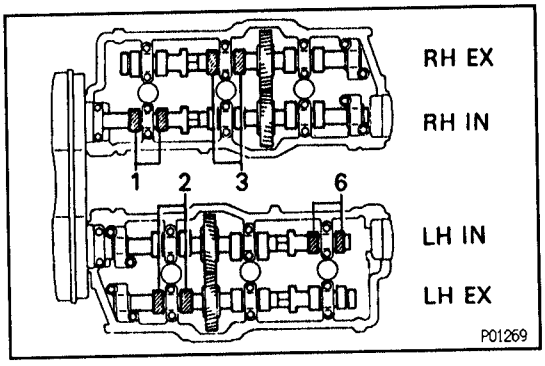

5. **INSPECT VALVE CLEARANCE**

(a) Check only those valves indicated in the illustration.

- Using a thickness gauge, measure the clearance between the valve lifter and camshaft.
- Record out of specification valve clearance measurements. They will be used later to determine the required replacement adjusting shim.

Valve clearance (Cold):

Intake

0.13 – 0.23 mm (0.006 – 0.009 in.)

Exhaust

0.27 – 0.37 mm (0.011 – 0.014 in.)

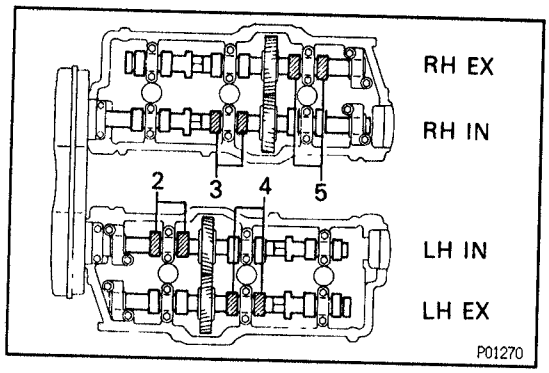

(b) Turn the crankshaft 2/3 of a revolution (240°), and check only the valves indicated in the illustration. Measure the valve clearance. (See procedure step (a))

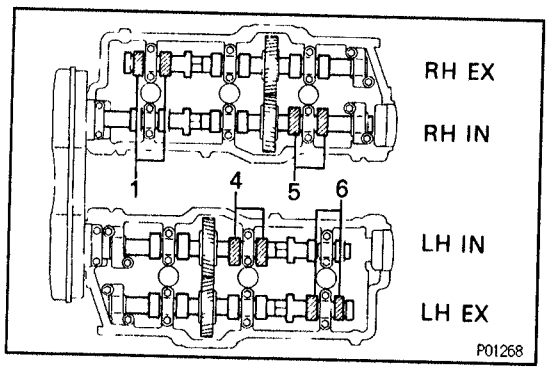

(c) Turn the crankshaft a further 2/3 of a revolution (240°), and check only the valves indicated in the illustration. Measure the valve clearance.
(See procedure step (a))

EG

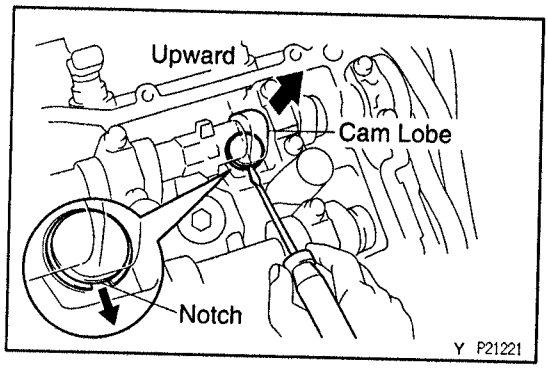

6. ADJUST VALVE CLEARANCE

(a) Remove the adjusting shim.

- Turn the camshaft so that the cam lobe for the valve to be adjusted faces up.
- Turn the valve lifter with a screwdriver so that the notches are perpendicular to the camshaft.

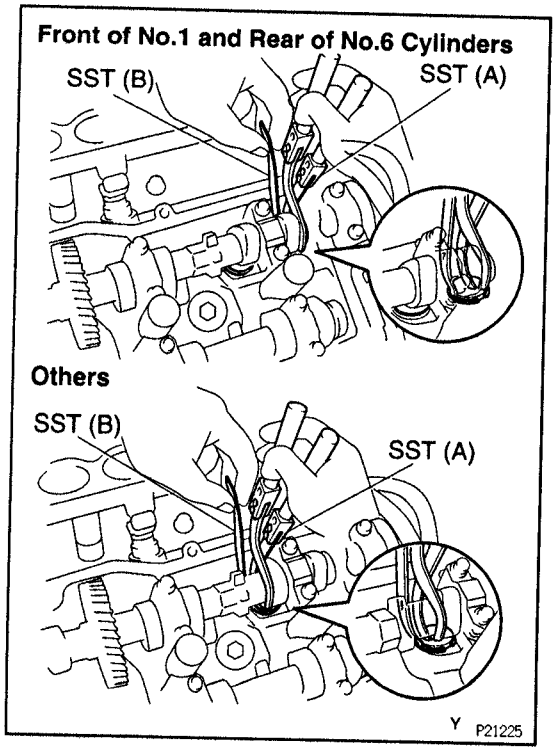

- Using SST (A), press down the valve lifter and place SST (B) between the camshaft and valve lifter. Remove SST (A).

SST 09248–55040 (09248–05410, 09248–05420)

HINT:

- Apply SST (B) at a slight angle on the side marked with "9" or "7", at the position shown in the illustration.
- When SST (B) is inserted too deeply, it will get pinched by the shim. To prevent it from being stuck, insert it gently from the intake side, at a slight angle.

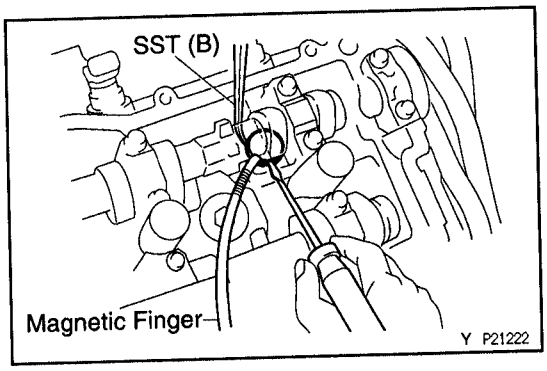

- Using a small screwdriver and magnetic finger, remove the adjusting shim.

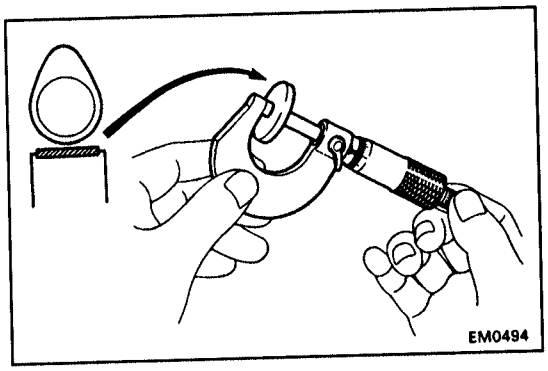

(b) Determine the replacement adjusting shim size according to these Formula or Charts:

- Using a micrometer, measure the thickness of the removed shim.
- Calculate the thickness of a new shim so the valve clearance comes within the specified value.

T ..... Thickness of used shim
A ..... Measured valve clearance
N ..... Thickness of new shim

Intake

N = T + (A – 0.18 mm (0.007 in.))

Exhaust

N = T + (A – 0.32 mm (0.013 in.))

- Select a new shim with a thickness as close as possible to the calculated values.

HINT: Shims are available in 17 sizes in increments of 0.050 mm (0.0020 in.), from 2.500 mm (0.0984 in.) to 3.300 mm (0.1299 in.).

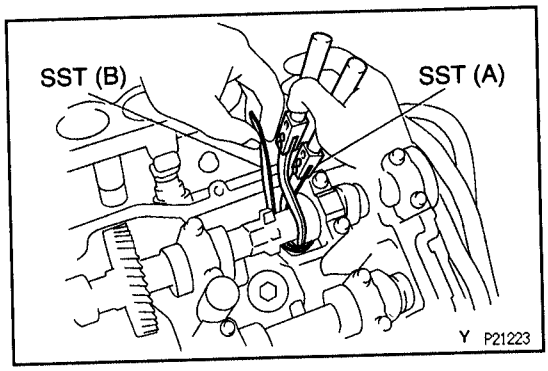

(c) Install a new adjusting shim.

- Place a new adjusting shim on the valve lifter, with imprinted numbers facing down.
- Press down the valve lifter with SST (A), and remove SST (B).

SST 09248–55040 (09248–05410, 09248–05420)

(d) Recheck the valve clearance.

7. **REINSTALL CYLINDER HEAD COVERS (See steps 6 and 15 in cylinder head installation)**
8. **REINSTALL INTAKE AIR CONNECTOR (See steps 16 to 19, 24 and 25 in cylinder head installation)**
9. **REFILL WITH ENGINE COOLANT**
10. **START ENGINE AND CHECK FOR LEAKS**

Adjusting Shim Selection Chart (Intake)

| Measured clearance mm (in.) \ Installed shim thickness mm (in.) | 2.500 (0.0984) | 2.520 (0.0992) | 2.540 (0.1000) | 2.550 (0.1004) | 2.560 (0.1008) | 2.580 (0.1016) | 2.600 (0.1024) | 2.620 (0.1031) | 2.640 (0.1039) | 2.650 (0.1043) | 2.660 (0.1047) | 2.670 (0.1051) | 2.680 (0.1055) | 2.690 (0.1059) | 2.700 (0.1063) | 2.710 (0.1067) | 2.720 (0.1071) | 2.730 (0.1075) | 2.740 (0.1079) | 2.750 (0.1083) | 2.760 (0.1087) | 2.770 (0.1091) | 2.780 (0.1094) | 2.790 (0.1098) | 2.800 (0.1102) | 2.810 (0.1106) | 2.820 (0.1110) | 2.830 (0.1114) | 2.840 (0.1118) | 2.850 (0.1122) | 2.860 (0.1126) | 2.870 (0.1130) | 2.880 (0.1134) | 2.890 (0.1138) | 2.900 (0.1142) | 2.910 (0.1146) | 2.920 (0.1150) | 2.930 (0.1154) | 2.940 (0.1157) | 2.950 (0.1161) | 2.960 (0.1166) | 2.970 (0.1169) | 2.980 (0.1173) | 2.990 (0.1177) | 3.000 (0.1181) | 3.010 (0.1185) | 3.020 (0 1189) | 3.030 (0.1193) | 3.040 (0.1197) | 3.050 (0.1201) | 3.060 (0 1205) | 3.080 (0 1213) | 3.100 (0.1220) | 3.120 (0.1228) | 3.140 (0.1236) | 3.150 (0.1240) | 3.160 (0.1244) | 3.180 (0.1252) | 3.200 (0.1260) | 3.220 (0.1268) | 3.240 (0.1276) | 3.250 (0.1280) | 3.260 (0.1283) | 3.280 (0.1291) | 3.300 (0 1299) |
|---|---|---

Adjusting Shim Selection Chart (Exhaust)

| Measured clearance mm (in.) \ Installed shim thickness mm (in.) | 2.500 (0.0984) | 2.520 (0.0992) | 2.540 (0.1000) | 2.560 (0.1004) | 2.580 (0.1008) | 2.600 (0.1016) | 2.620 (0.1024) | 2.640 (0.1031) | 2.650 (0.1039) | 2.660 (0.1043) | 2.670 (0.1047) | 2.680 (0.1051) | 2.690 (0.1055) | 2.700 (0.1059) | 2.710 (0.1063) | 2.720 (0.1067) | 2.730 (0.1071) | 2.740 (0.1075) | 2.750 (0.1079) | 2.760 (0.1083) | 2.770 (0.1087) | 2.780 (0.1091) | 2.790 (0.1094) | 2.800 (0.1098) | 2.810 (0.1102) | 2.820 (0.1106) | 2.830 (0.1110) | 2.840 (0.1114) | 2.850 (0.1118) | 2.860 (0.1122) | 2.870 (0.1126) | 2.880 (0.1130) | 2.890 (0.1134) | 2.900 (0.1138) | 2.910 (0.1142) | 2.920 (0.1146) | 2.930 (0.1150) | 2.940 (0.1154) | 2.950 (0.1157) | 2.960 (0.1161) | 2.970 (0.1165) | 2.980 (0.1169) | 2.990 (0.1173) | 3.000 (0.1177) | 3.010 (0.1181) | 3.020 (0.1185) | 3.030 (0.1189) | 3.040 (0.1193) | 3.050 (0.1197) | 3.060 (0.1201) | 3.080 (0.1206) | 3.100 (0.1213) | 3.120 (0.1220) | 3.140 (0.1228) | 3.150 (0.1236) | 3.160 (0.1240) | 3.180 (0.1244) | 3.200 (0.1252) | 3.220 (0.1260) | 3.240 (0.1268) | 3.250 (0.1276) | 3.260 (0.1280) | 3.280 (0.1283) | 3.300 (0.1291) | 3.320 (0.1299) |
|---|---|---

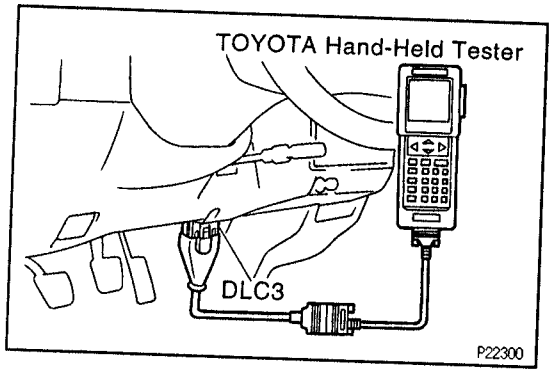

IGNITION TIMING INSPECTION

1. **WARM UP ENGINE** EG565–02
   Allow the engine to warm up to normal operating temperature.
2. **CONNECT TOYOTA HAND–HELD TESTER OR OBD II SCAN TOOL**
   (a) Connect the TOYOTA hand–held tester or OBD II scan tool to the DLC3.
   (b) Please refer to the TOYOTA hand–held tester or OBD II scan tool operator's manual for further details.
3. **CONNECT TIMING LIGHT TO ENGINE**
4. **CHECK IDLE SPEED**
   (a) Race the engine speed at 2,500 rpm for approx. 90 seconds.
   (b) Check the idle speed.
   Idle speed:
   700 ± 50 rpm

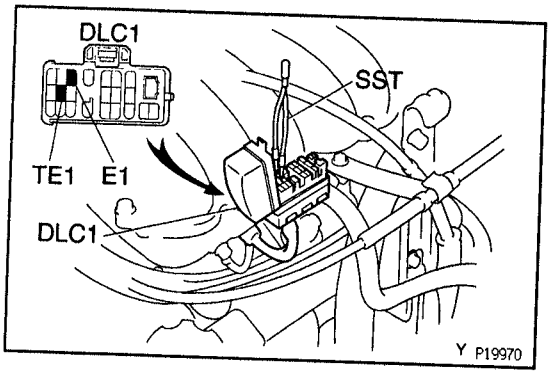

5. **INSPECT IGNITION TIMING**
   (a) Using SST, connect terminals TE1 and E1 of the DLC1.
   SST 09843–18020

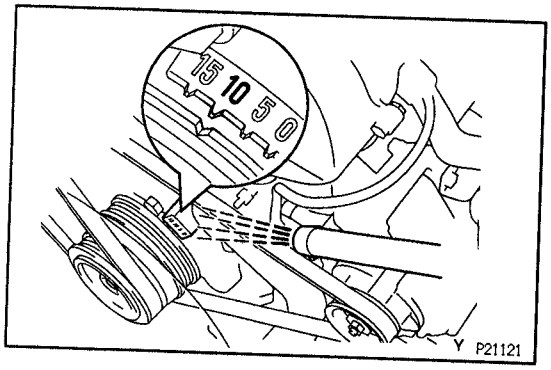

   (b) Using a timing light, check the ignition timing.
   Ignition timing:
   8 – 12° BTDC @ idle
   (Transmission in neutral position)
   (c) Remove the SST from the DLC1.
   SST 09843–18020
6. **FURTHER CHECK IGNITION TIMING**
   Ignition timing:
   12.5 – 22° BTDC @ idle
   (Transmission in neutral position)
   HINT: The timing mark moves in a range between 12.5° and 22°.
7. **DISCONNECT TIMING LIGHT FROM ENGINE**
8. **DISCONNECT TOYOTA HAND–HELD TESTER OR OBD II SCAN TOOL**

EG

IDLE SPEED INSPECTION

EG506-02

1. INITIAL CONDITIONS

(a) Engine at normal operating temperature
(b) Air cleaner installed
(c) All pipes and hoses of air induction system connected
(d) All accessories switched OFF
(e) All vacuum lines properly connected
HINT (w/ EGR): All vacuum hoses for EGR system, etc. should be properly connected.
(f) SFI system wiring connectors fully plugged
(g) Ignition timing checked correctly
(h) Transmission in neutral position

2. CONNECT TOYOTA HAND-HELD TESTER OR OBD II SCAN TOOL
(See step 2 in ignition timing inspection)

3. INSPECT IDLE SPEED

(a) Race the engine speed at 2,500 rpm for approx. 90 seconds.
(b) Check the idle speed.
Idle speed:
700 ± 50 rpm
If the idle speed is not as specified, check the IAC valve and air intake system.

4. DISCONNECT TOYOTA HAND-HELD TESTER OR OBD II SCAN TOOL

EG

TIMING BELT

COMPONENTS FOR REMOVAL AND INSTALLATION

EG571–04

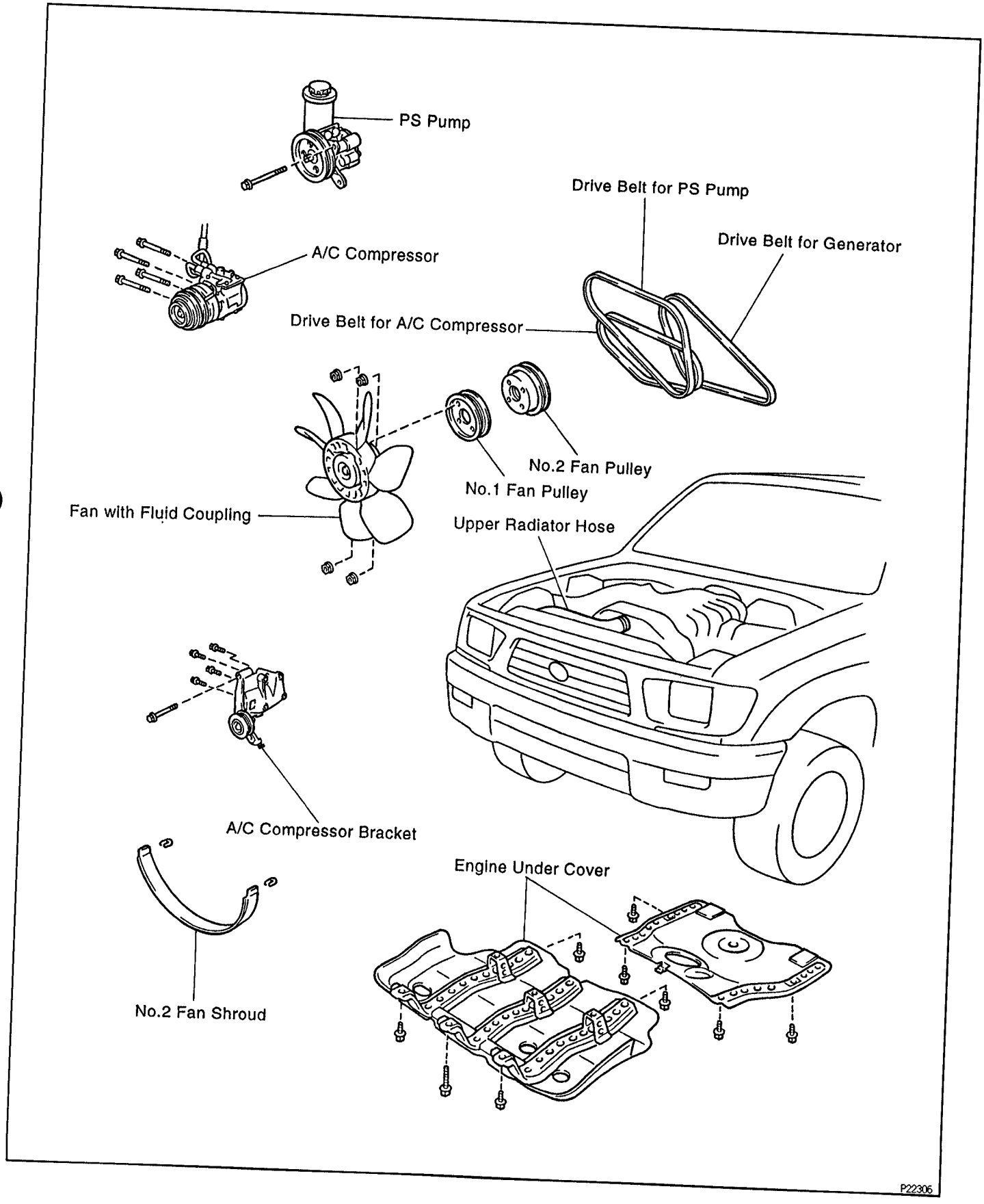

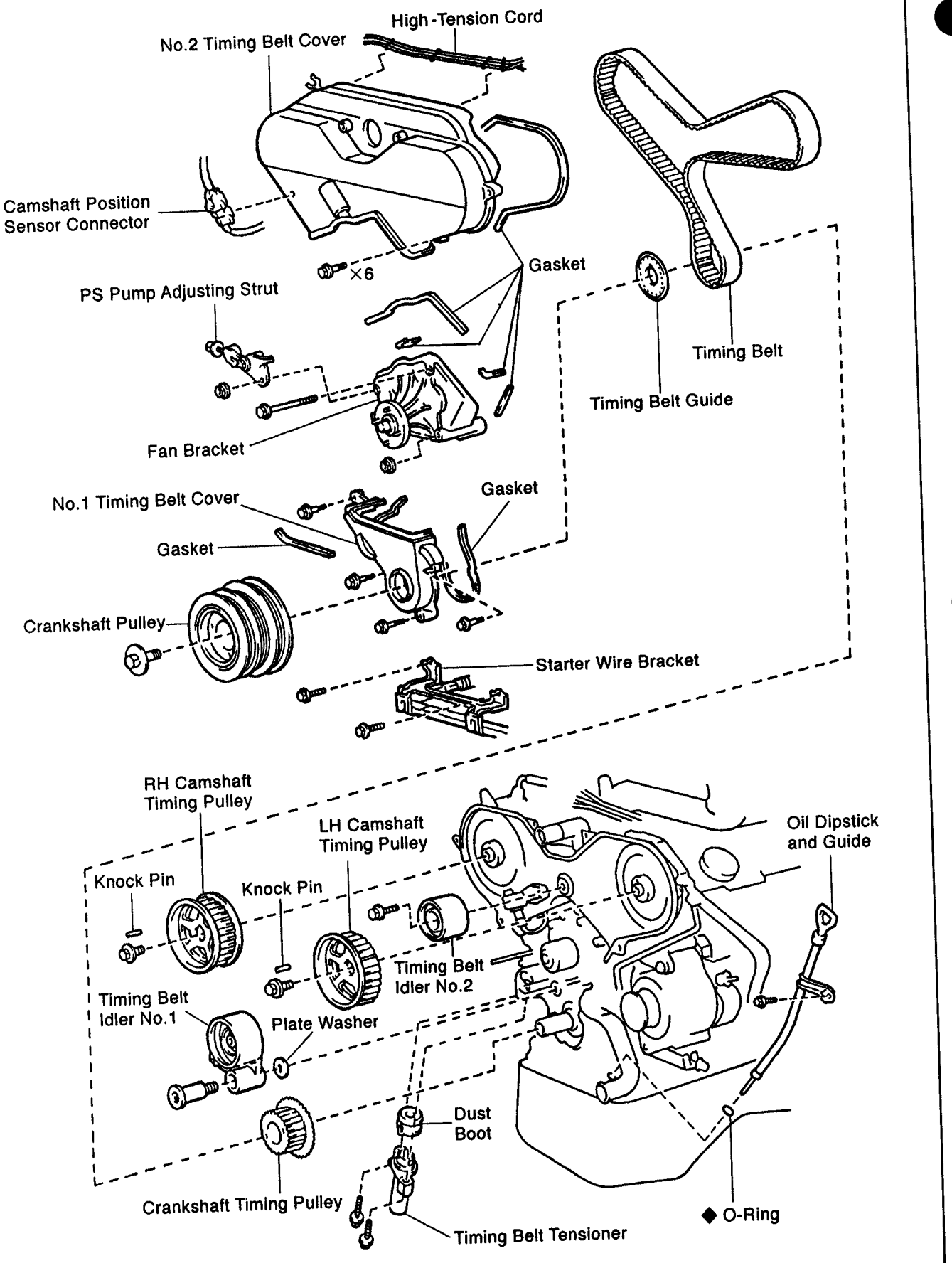

◆ Non-reusable part

P24354

EG572-03

TIMING BELT REMOVAL

1. REMOVE ENGINE UNDER COVER
2. DRAIN ENGINE COOLANT
3. DISCONNECT UPPER RADIATOR HOSE
4. REMOVE DRIVE BELT FOR PS PUMP
5. w/ A/C:
   REMOVE DRIVE BELT FOR A/C COMPRESSOR
6. REMOVE DRIVE BELT FOR GENERATOR
7. REMOVE NO.2 FAN SHROUD
8. REMOVE FAN WITH FLUID COUPLING AND FAN PULLEYS
9. DISCONNECT PS PUMP FROM ENGINE
10. w/ A/C:
    DISCONNECT A/C COMPRESSOR FROM ENGINE
11. w/ A/C:
    REMOVE A/C COMPRESSOR BRACKET
12. REMOVE OIL DIPSTICK AND GUIDE
    Remove the bolt, oil dipstick, guide and O-ring.

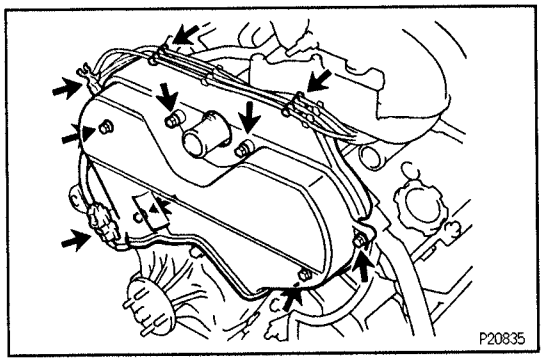

13. REMOVE NO.2 TIMING BELT COVER
(a) Disconnect the camshaft position sensor connector, 3 high-tension cord clamps and PS pump hose from the No.2 timing belt cover.
(b) Remove the 6 bolts and timing belt cover.

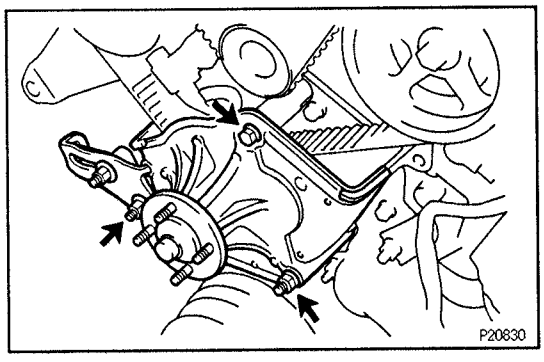

14. REMOVE FAN BRACKET
(a) Remove the nut and PS pump adjusting strut.
(b) Remove the bolt, nut, and fan bracket.

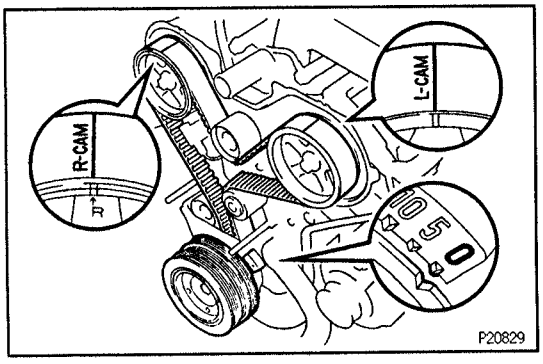

15. SET NO.1 CYLINDER AT TDC/COMPRESSION
(a) Turn the crankshaft pulley and align its groove with timing mark "0" of the No.1 timing belt cover.
(b) Check that the timing marks of the camshaft timing pulleys and No.3 timing belt cover are aligned.
If not, turn the crankshaft pulley 1 revolution (360°).

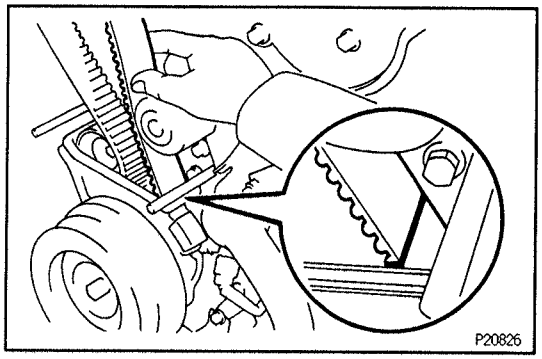

HINT (When re-using timing belt): Place the matchmarks on the timing belt and camshaft timing pulleys, and place matchmark on timing belt to match the end of the No.1 timing belt cover.

EG

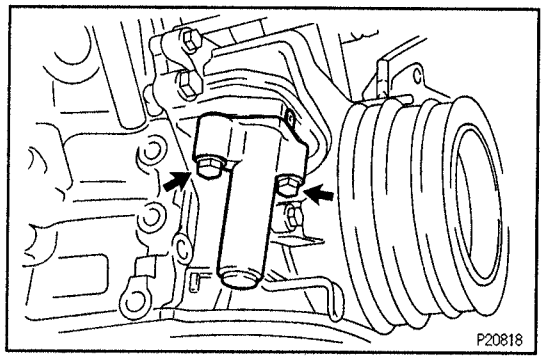

16. REMOVE TIMING BELT TENSIONER

Alternately loosen the 2 bolts and remove them, then remove the belt tensioner and dust boot.

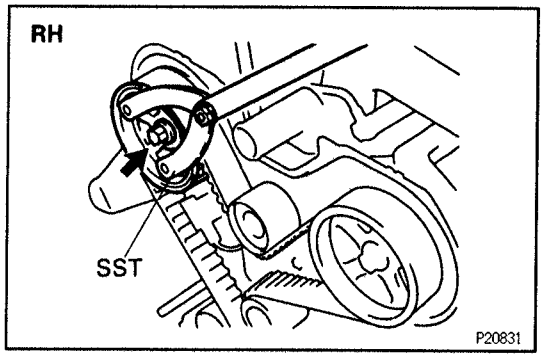

17. REMOVE RH CAMSHAFT TIMING PULLEY WITH TIMING BELT

(a) Using SST, loosen the pulley bolt.
SST 09960-10010 (09962-01000, 09963-01000)

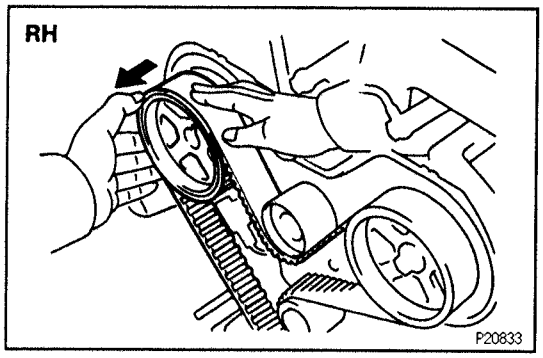

(b) Remove the bolt, knock pin and camshaft timing pulley with timing belt.

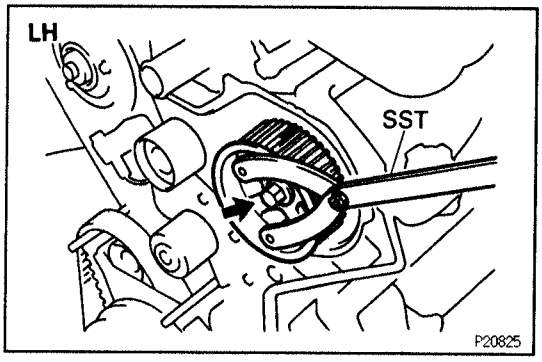

18. REMOVE LH CAMSHAFT TIMING PULLEY

(a) Using SST, loosen the pulley bolt.
SST 09960-10010 (09962-01000, 09963-01000)

(b) Remove the bolt, knock pin and camshaft timing pulley.

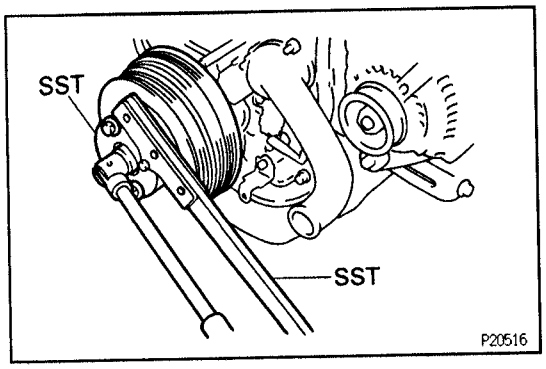

19. REMOVE CRANKSHAFT PULLEY

(a) Using SST, loosen the pulley bolt.
SST 09213-54015 (90119-08216),
09330-00021

(b) Remove the SST, pulley bolt and pulley.

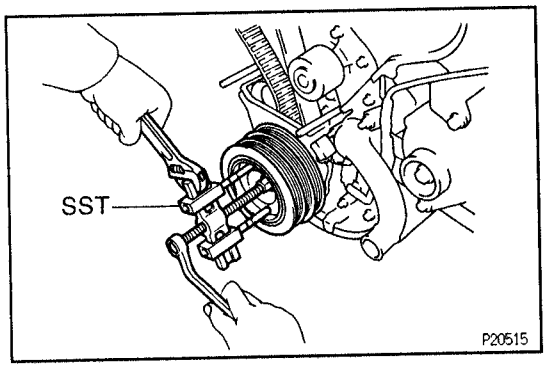

HINT: If necessary, remove the pulley with SST and service bolt.
SST 09950-50010 (09551-05010, 09552-05010, 09553-05020, 09554-05030)

EG

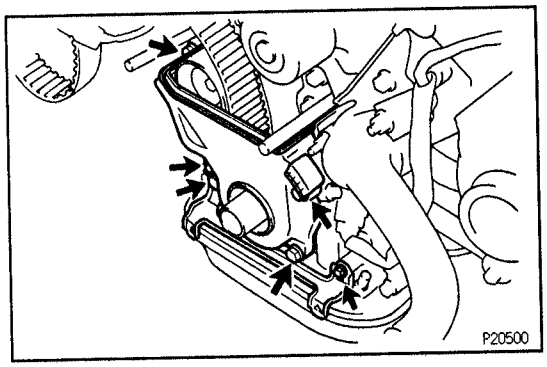

20. REMOVE STARTER WIRE BRACKET AND NO. 1 TIMING BELT COVER

(a) Remove the 2 bolts and starter wire bracket.
(b) Remove the 4 bolts and timing belt cover.

21. REMOVE TIMING BELT GUIDE

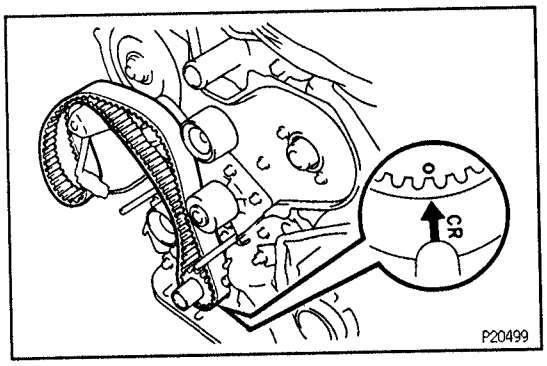

22. REMOVE TIMING BELT

HINT (When re-using timing belt): If the installation marks have disappeared, place a new installation mark on the timing belt to match the drilled mark of the crankshaft timing pulley.

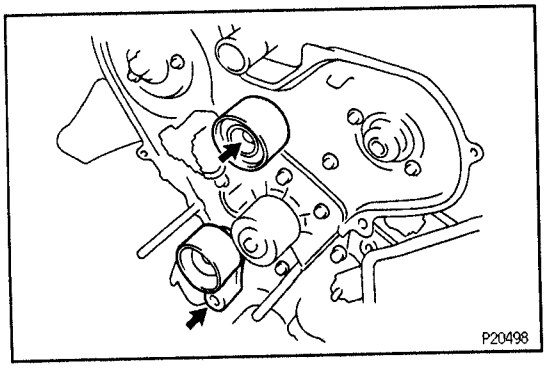

23. REMOVE TIMING BELT IDLER NO.2 AND TIMING BELT IDLER NO.1

(a) Remove the bolt and timing belt idler No.2.
(b) Using a 10 mm hexagon wrench, remove the pivot bolt, timing belt idler No.1 and plate washer.

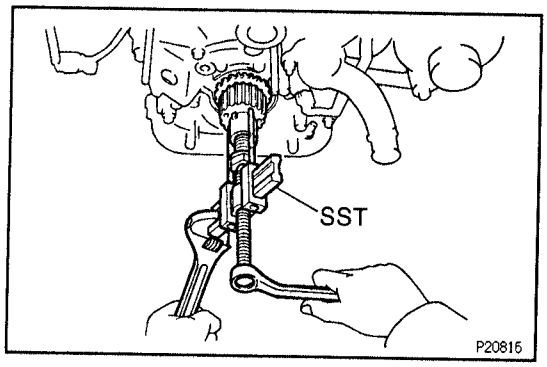

24. REMOVE CRANKSHAFT TIMING PULLEY

Remove crankshaft timing pulley.

HINT: If the pulley cannot be removed by hand, use SST and service bolt to remove the crankshaft timing pulley.

SST 09950-50010 (09951-05010, 09952-05010, 09953-05020, 09954-05010)

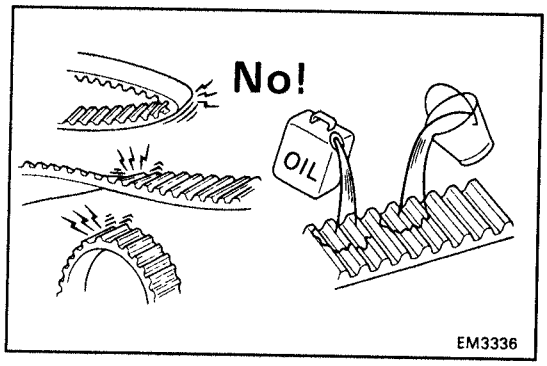

TIMING BELT INSPECTION

EG5YB-01

1. INSPECT TIMING BELT

NOTICE:

- **Do not bend, twist or turn the timing belt inside out.**
- **Do not allow the timing belt to come into contact with oil, water or steam.**
- **Do not utilize timing belt tension when installing or removing the mount bolt of the camshaft timing pulley.**

If there are any defects, as shown in the illustrations, check these points:

(a) Premature parting
- Check for proper installation.
- Check the timing cover gasket for damage and proper installation.

(b) If the belt teeth are cracked or damaged, check to see if either camshaft is locked.

(c) If there is noticeable wear or cracks on the belt face, check to see if there are nicks on the side of the idler pulley lock and water pump.

(d) If there is wear or damage on only one side of the belt, check the belt guide and the alignment of each pulley.

(e) If there is noticeable wear on the belt teeth, check the timing cover for damage, correct gasket installation, and for foreign material on the pully teeth.

If necessary, replace the timing belt.

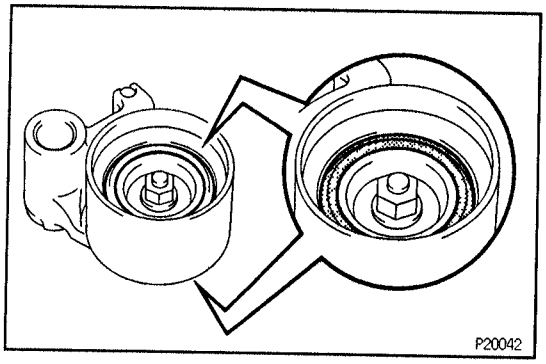

2. INSPECT IDLER PULLEYS

(a) Visually check the seal portion of the idler pulley for oil leakage.

If leakage is found, replace the idler pulley.

(b) Check that the idler pulley turns smoothly.

If necessary, replace the idler pulley.

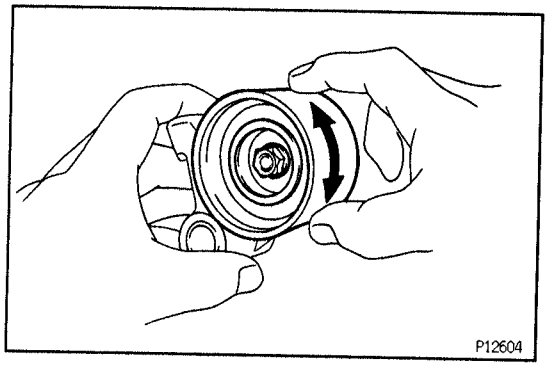

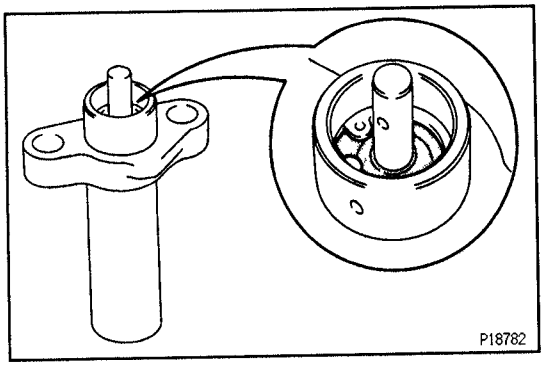

3. INSPECT TIMING BELT TENSIONER

(a) Visually check the seal portion of the tensioner for oil leakage.
HINT: If there is only the faintest trace of oil on the seal on the push rod side, the tensioner is all right.
If leakage is found, replace the tensioner.

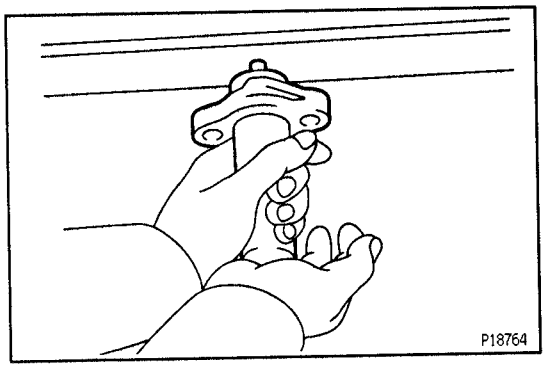

(b) Hold the tensioner with both hands and push the push rod strongly as shown to check that it doesn't move.
If the push rod moves, replace the tensioner.
NOTICE: Never hold the tensioner push rod facing downward.

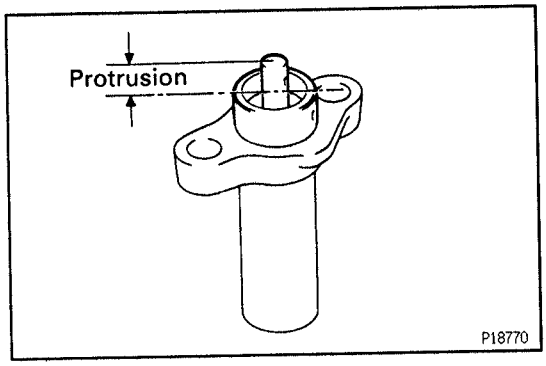

(c) Measure the protrusion of the push rod from the housing end.
Protrusion:
10.0 – 10.8 mm (0.394 – 0.425 in.)
If the protrusion is not as specified, replace the tensioner.

EG574-03

TIMING BELT INSTALLATION

1. INSTALL CRANKSHAFT TIMING PULLEY

(a) Align the pulley set key with the key groove of the timing pulley and slide on the timing pulley.
(b) Slide on the timing pulley, facing the flange side inward.

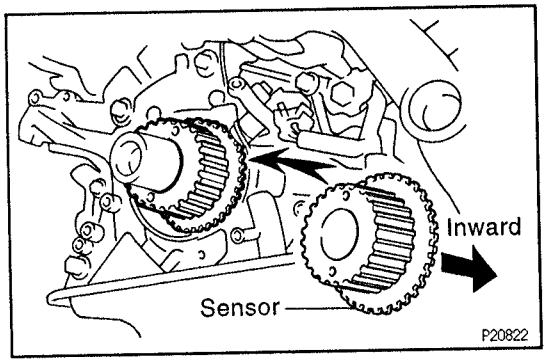

2. INSTALL TIMING BELT IDLER NO.1 AND TIMING BELT IDLER NO.2

(a) Using a 10 mm hexagon wrench, install the timing belt idler No.1 with the plate washer and bolt.
Torque: 35 N·m (350 kgf·cm, 26 ft·lbf)
(b) Check that the pulley bracket moves smoothly.
(c) Install the timing belt idler No.2 with the bolt.
Torque: 40 N·m (400 kgf·cm, 30 ft·lbf)
(d) Check that the timing belt idler No.2 moves smoothly.

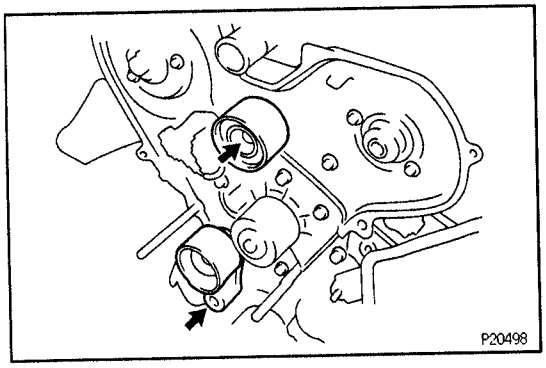

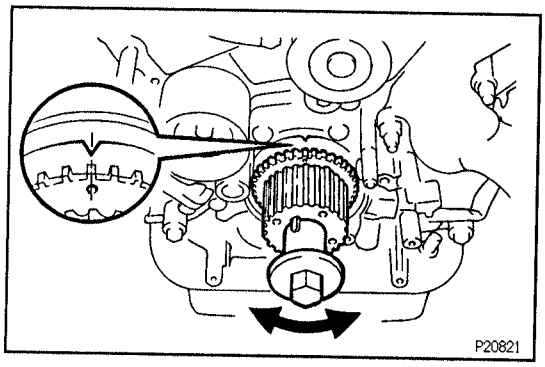

3. TEMPORARILY INSTALL TIMING BELT

NOTICE: The engine should be cold.

(a) Use the crankshaft pulley bolt to turn the crankshaft and align the timing marks on the crankshaft timing pulley and on the oil pump body.

(b) Remove any oil or water on the crankshaft timing pulley, idler pulley and water pump pulley, and keep them clean.

EG

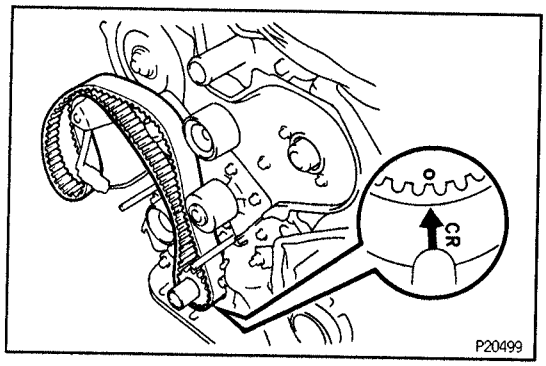

(c) Align the installation mark on the timing belt with the drilled mark of the crankshaft timing pulley.

(d) Install the timing belt on the crankshaft timing pulley, No.1 idler and water pump pulleys.

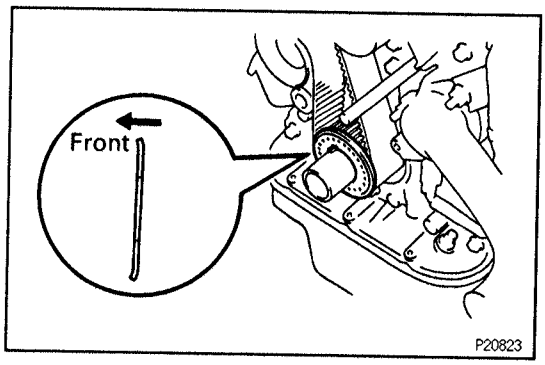

4. INSTALL TIMING BELT GUIDE

Install the guide, facing the cup side outward.

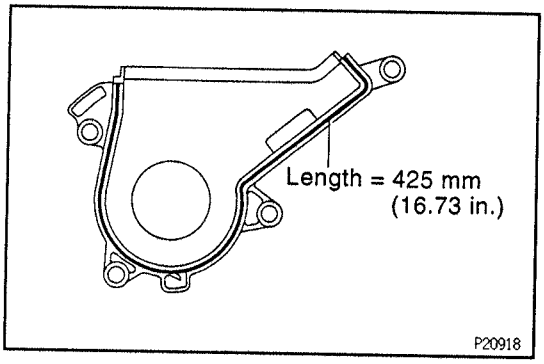

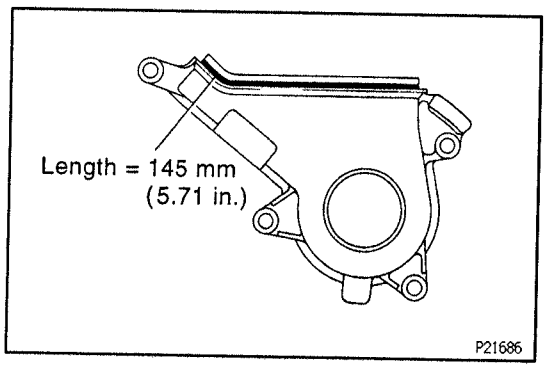

5. INSTALL NO.1 TIMING BELT COVER AND STARTER WIRE BRACKET

(a) Check that the timing belt cover gaskets have cracks or peeling, etc.

If the gasket does have cracks or peeling, etc., replace it using following steps.

- Using a screwdriver and gasket scraper, remove all the old gasket material.
- Thoroughly clean all components to remove all the loose material.
- Remove the backing paper from a new gasket and install the gasket evenly to the part of the belt cover shaded back in the illustration.

(b) Install the timing belt cover with the 4 bolts.

Torque: 9 N·m (90 kgf·cm, 80 in.·lbf)

(c) Install the starter wire bracket with the 2 bolts.

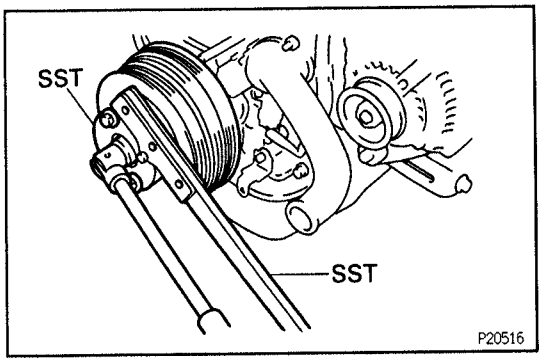

6. INSTALL CRANKSHAFT PULLEY

(a) Align the pulley set key with the key groove of the pulley, and slide the pulley.

(b) Using SST, install and torque the bolt.
SST 09213–54015 (90119–08216),
09330–00021
Torque: 250 N·m (2,500 kgf·cm, 184 ft·lbf)

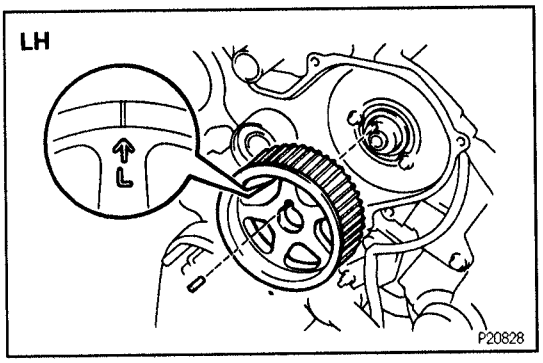

7. INSTALL LH CAMSHAFT TIMING PULLEY

(a) Slide the timing pulley, facing the flange side outward.

(b) Align the knock pin hole of the camshaft with the knock pin groove of the timing pulley as shown.

(c) Install the knock pin.

(d) Using SST, install and torque the bolt.
SST 09960–10010 (09962–01000, 09963–01000)
Torque: 110 N·m (1,100 kgf·cm, 81 ft·lbf)

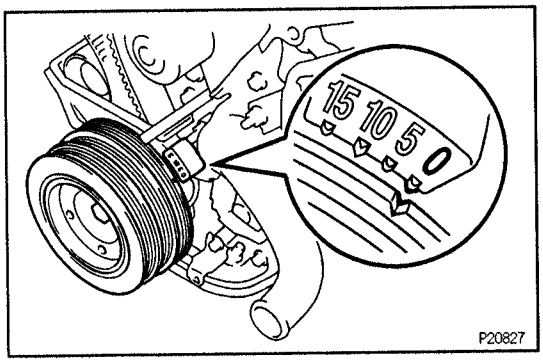

8. SET NO.1 CYLINDER TO TDC/COMPRESSION

(a) (Crankshaft Position)
Turn the crankshaft pulley and align its groove with the "O" timing mark of the No.1 timing belt cover.

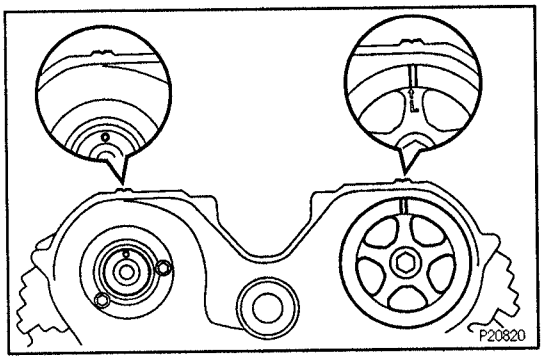

(b) (RH Camshaft Position)
Turn the camshaft, and align the knock pin hole of the camshaft with the timing mark of the No.3 timing belt cover.

(c) (LH Camshaft Pulley Position)
Turn the camshaft timing pulley, and align the timing marks of the camshaft timing pulley and No.3 timing belt cover.

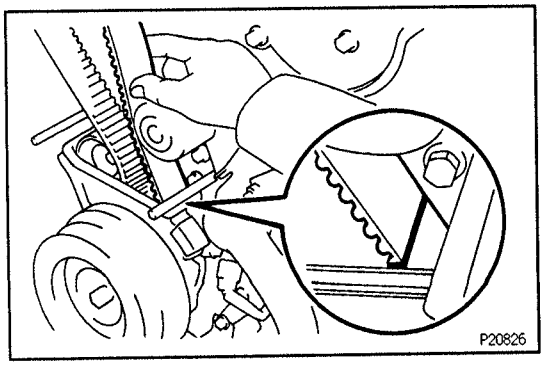

9. INSTALL TIMING BELT TO LH CAMSHAFT TIMING PULLEY

(a) HINT (When re–using timing belt):
Check that the installation mark on the timing belt matches the end of the No.1 timing belt cover.
If the installation mark does not align, shift the meshing of the timing belt and crankshaft timing pulley until they align.

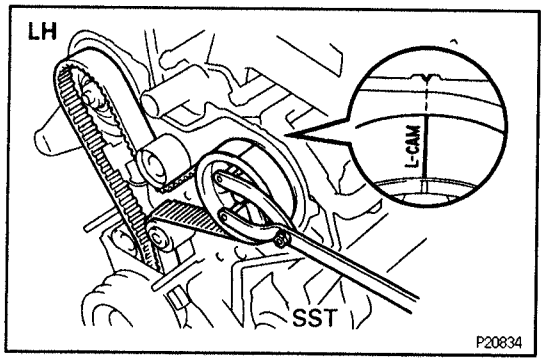

(b) Remove any oil or water on the LH camshaft timing pulley, and keep it clean.

(c) Using SST, slightly turn the LH camshaft timing pulley clockwise. Align the installation mark on the timing belt with the timing mark of the camshaft timing pulley, and hang the timing belt on the LH camshaft timing pulley.
SST 09960–10010 (09962–01000, 09963–01000)

EG

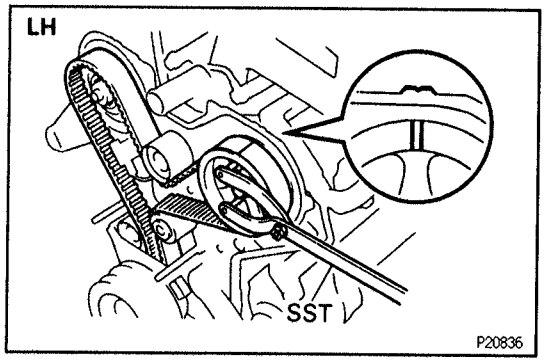

(d) Using SST, align the timing marks of the LH camshaft pulley and No.3 timing belt cover.
SST 09960–10010 (09962–01000, 09963–01000)

(e) Check that the timing belt has tension between the crankshaft timing and LH camshaft timing pulleys.

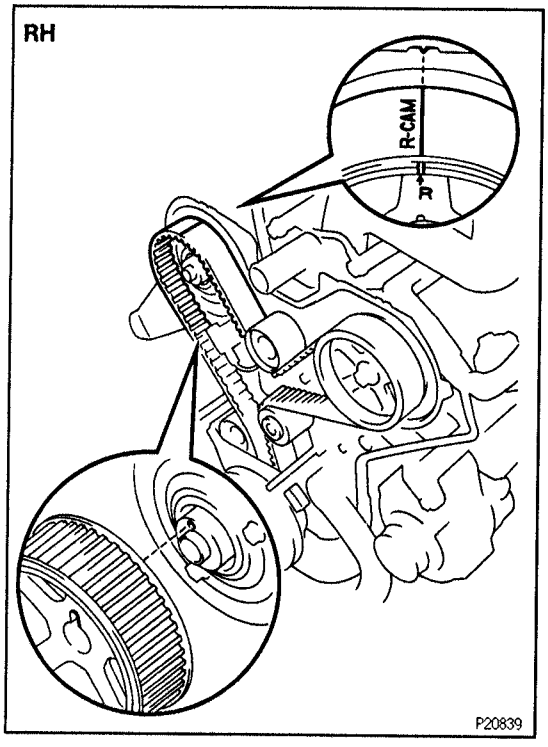

10. INSTALL RH CAMSHAFT TIMING PULLEY AND TIMING BELT

(a) Remove any oil or water on the RH camshaft timing and No.2 idler pulleys, and keep them clean.

(b) Align the installation mark on the timing belt with the timing mark of the RH camshaft timing pulley as shown.

(c) Hang the timing belt on the RH camshaft timing pulley.

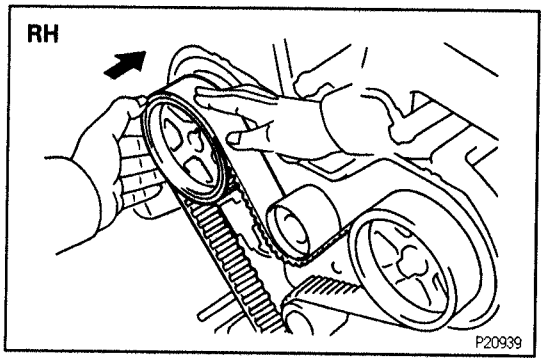

(d) Align the timing marks of the RH camshaft timing pulley and No.3 timing belt cover.

(e) Slide the RH camshaft timing pulley on the camshaft.

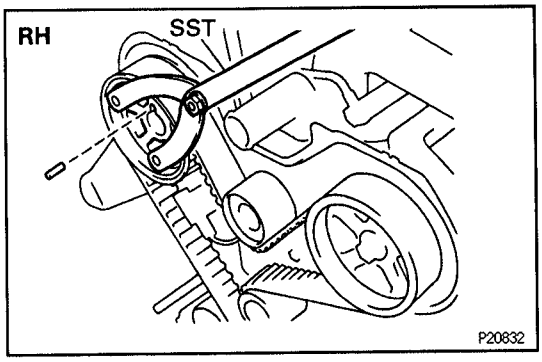

(f) Using SST, align the knock pin hole of the camshaft with the knock pin groove marked R of the pulley and install the knock pin.
SST 09960-10010 (09962-01000, 09963-01000)

(g) Using SST, install and torque the bolt.
SST 09960-10010 (09962-01000, 09963-01000)
Torque: 110 N·m (1,100 kgf·cm, 81 ft·lbf)

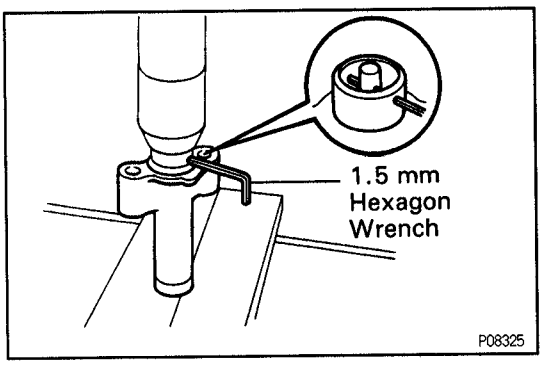

11. SET TIMING BELT TENSIONER

(a) Using a press, slowly press in the push rod using 100 – 1,000 kg (220 – 2,205 lb, 981 – 9,807 N) of pressure.

(b) Align the holes of the push rod and housing, pass a 1.5 mm hexagon wrench through the holes to keep the setting position of the push rod.

(c) Release the press.

(d) Install the dust boot to the tensioner.

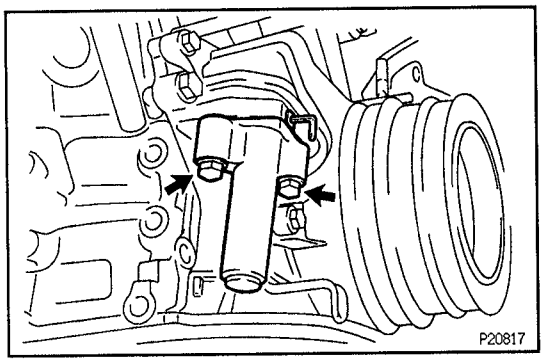

12. INSTALL TIMING BELT TENSIONER

(a) Install the tensioner with the 2 bolts.
Torque: 27 N·m (270 kgf·cm, 20 ft·lbf)

(b) Remove the 1.5 mm hexagon wrench from the tensioner.

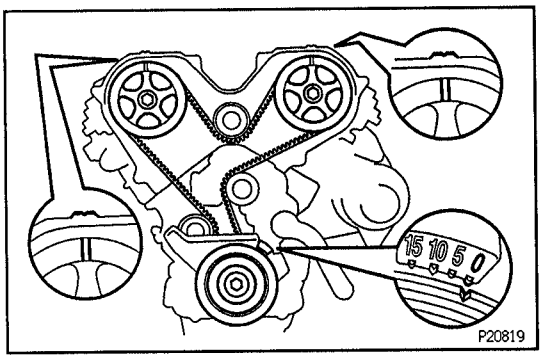

13. CHECK VALVE TIMING

(a) Turn the crankshaft pulley 2 revolutions from TDC to TDC.
HINT: Always turn the crankshaft clockwise.

(b) Check that each pulley aligns with the timing marks as shown in the illustration.
If the marks do not align, remove the timing belt and reinstall it.

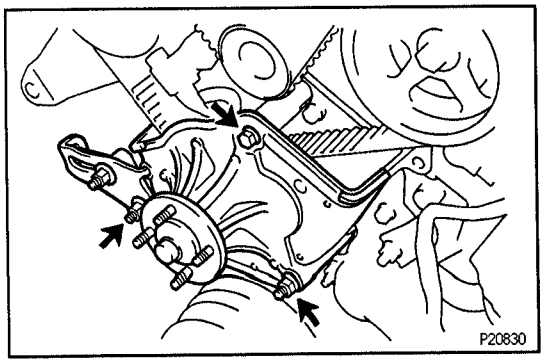

14. INSTALL FAN BRACKET

(a) Install the fan bracket with the bolt and nut.

(b) Install the PS pump adjusting strut with the nut.

EG

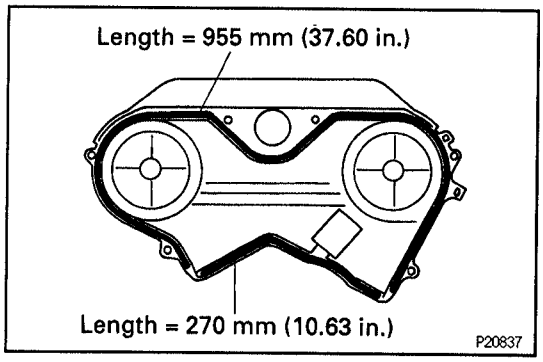

15. INSTALL NO.2 TIMING BELT COVER

(a) Check that the timing belt cover gasket has no cracks or peeling, etc.
If the gasket does have cracks or peeling, etc., replace it using following steps.
- Using a screwdriver and gasket scraper, remove all the old gasket material.
- Thoroughly clean all components to remove all the loose material.
- Remove the backing paper from a new gasket and install the gasket evenly to the part of the belt cover shaded black in the illustration.

(b) Install the belt cover with the 6 bolts.
Torque: 9 N·m (90 kgf·cm, 80 in.·lbf)

(c) Connect the PS pump hose, 3 high–tension cord clamps and camshaft position sensor connector to the No.2 timing belt cover.

16. INSTALL OIL DIPSTICK AND GUIDE

(a) Install a new O–ring to the dipstick guide.

(b) Install the oil dipstick and guide to the cylinder block.

(c) Install the bolt to the generator bracket.
Torque: 8 N·m (80 kgf·cm, 71 in.·lbf)

17. w/ A/C:
INSTALL A/C COMPRESSOR BRACKET

18. w/ A/C:
CONNECT A/C COMPRESSOR TO ENGINE

19. CONNECT PS PUMP TO ENGINE

20. INSTALL FAN WITH FLUID COUPLING AND FAN PULLEYS
Torque: 5.4 N·m (54 kgf·cm, 48 in.·lbf)

21. INSTALL NO.2 FAN SHROUD

22. INSTALL AND ADJUST DRIVE BELT FOR GENERATOR
(See step 4 in on–vehicle inspection in Charging System)

23. w/ A/C:
INSTALL AND ADJUST DRIVE BELT FOR A/C COMPRESSOR

24. INSTALL AND ADJUST DRIVE BELT FOR PS PUMP

25. CONNECT UPPER RADIATOR HOSE

26. FILL ENGINE WITH COOLANT

27. START ENGINE CHECK FOR LEAKS

28. INSTALL ENGINE UNDER COVER

29. ROAD TEST VEHICLE
Check for abnormal noise, shock, slippage, correct shift points and smooth operation.

30. RECHECK ENGINE COOLANT LEVEL

CYLINDER HEADS

COMPONENTS FOR REMOVAL AND INSTALLATION

EG0006-04

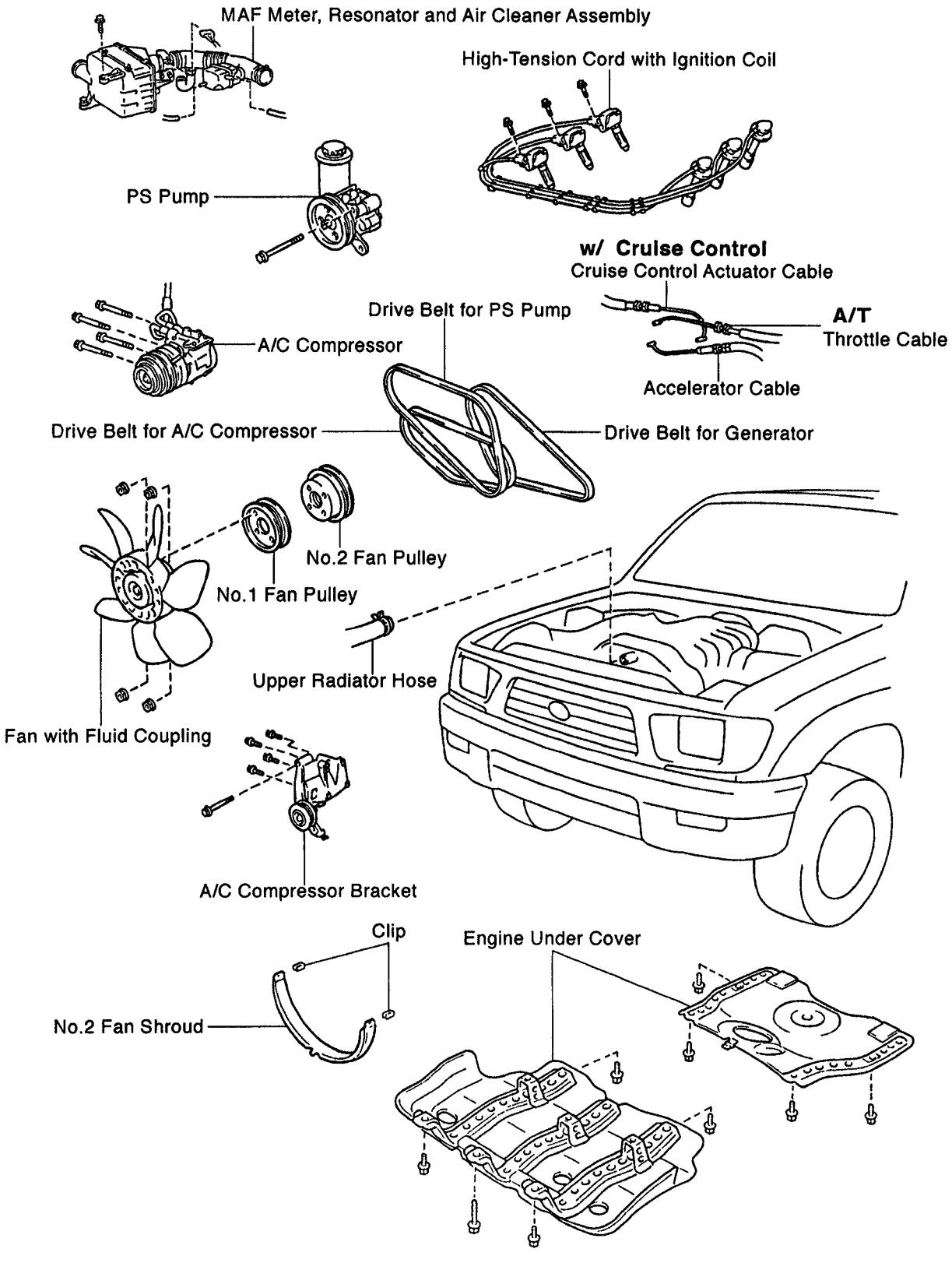

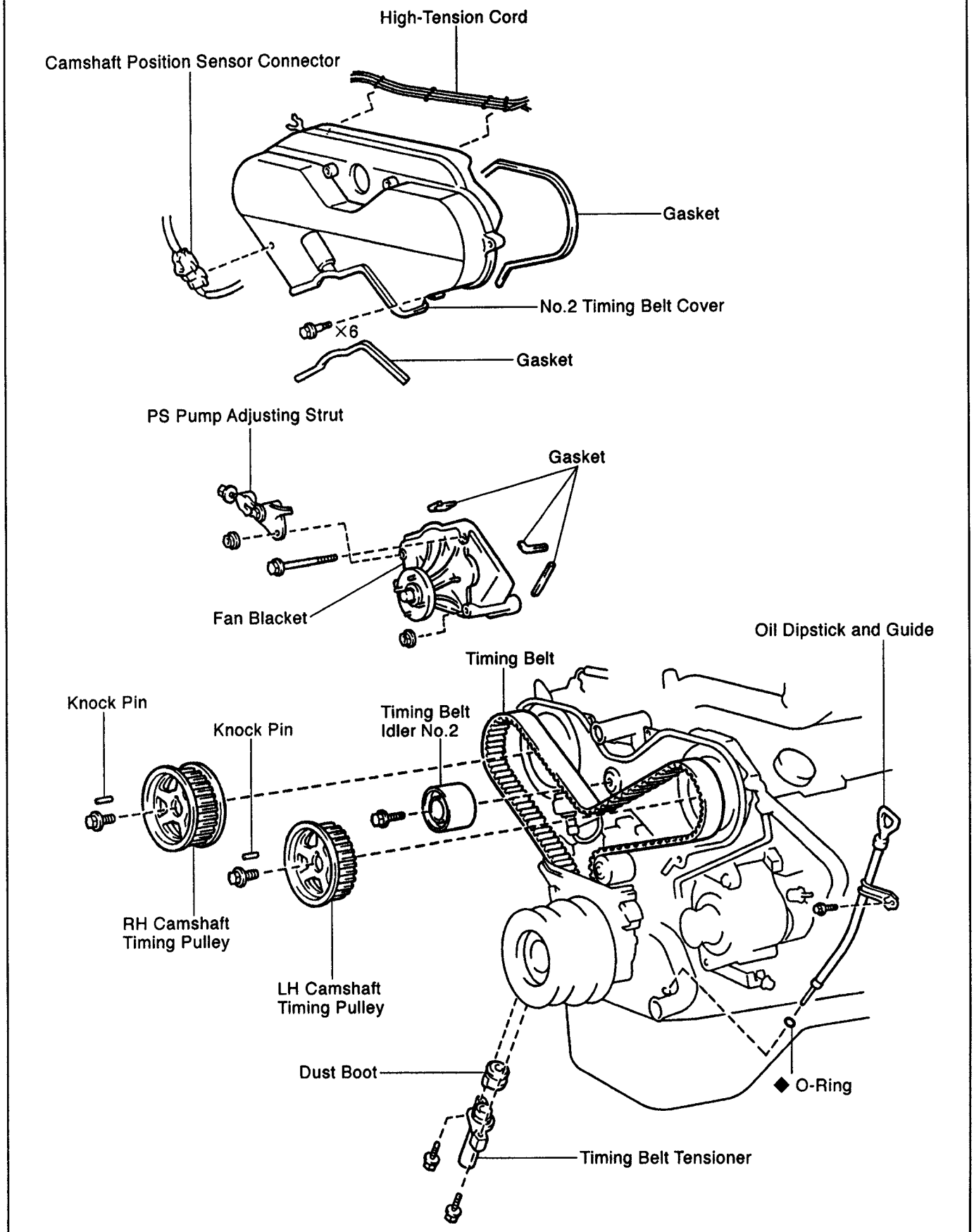
High-Tension Cord
Camshaft Position Sensor Connector
Gasket
No.2 Timing Belt Cover
×6
Gasket
PS Pump Adjusting Strut
Gasket
Fan Blacket
Oil Dipstick and Guide
Timing Belt
Knock Pin
Timing Belt Idler No.2
Knock Pin
RH Camshaft Timing Pulley
LH Camshaft Timing Pulley
Dust Boot
◆ O-Ring
Timing Belt Tensioner
◆ Non-reusable part
P24356

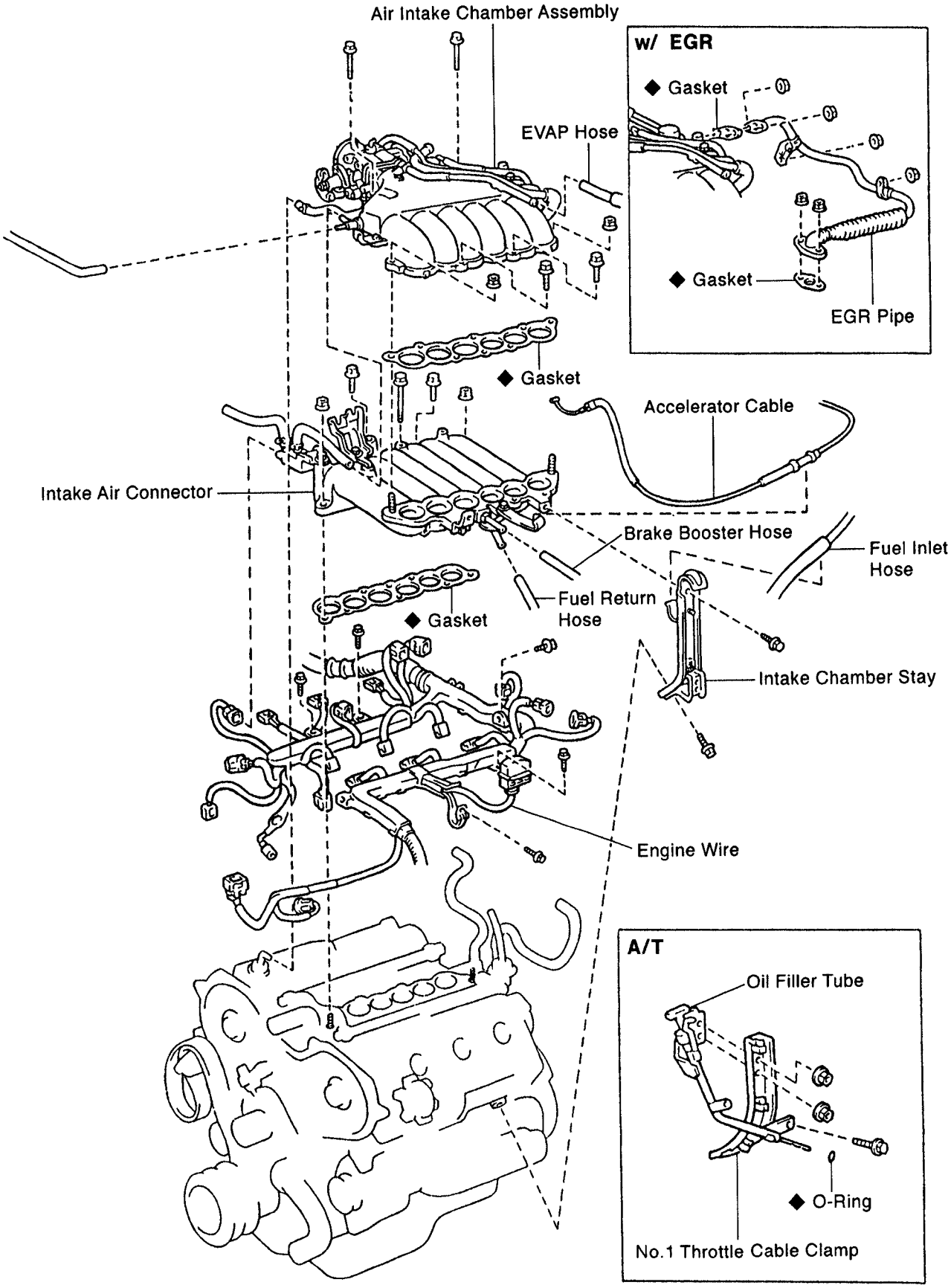

◆ Non-reusable part

P24344

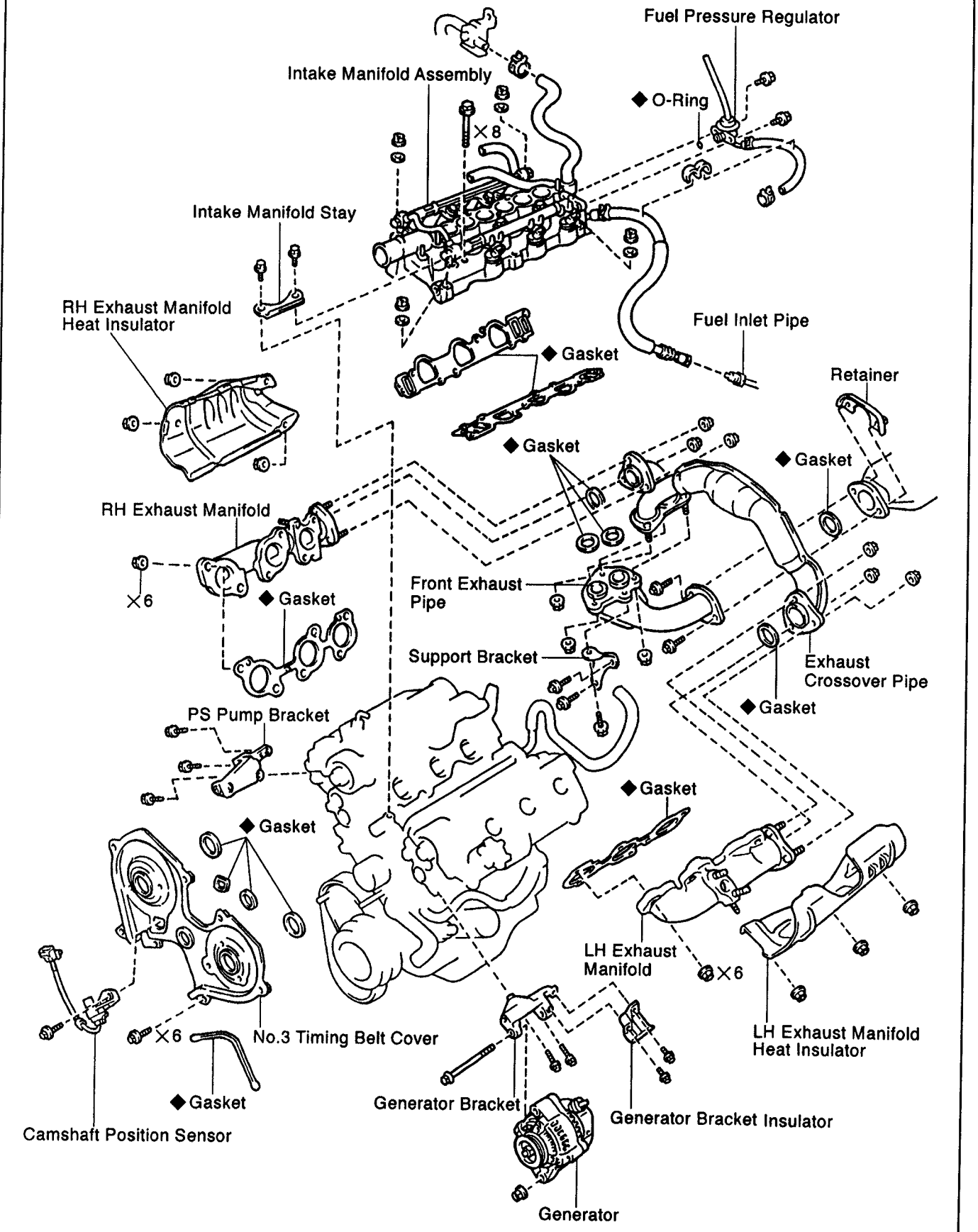
Fuel Pressure Regulator
Intake Manifold Assembly
◆ O-Ring
×8
Intake Manifold Stay
RH Exhaust Manifold Heat Insulator
Fuel Inlet Pipe
◆ Gasket
Retainer
◆ Gasket
◆ Gasket
RH Exhaust Manifold
×6
◆ Gasket
Front Exhaust Pipe
Support Bracket
Exhaust Crossover Pipe
◆ Gasket
PS Pump Bracket
◆ Gasket
◆ Gasket
LH Exhaust Manifold
×6
×6
No.3 Timing Belt Cover
LH Exhaust Manifold Heat Insulator
◆ Gasket
Generator Bracket
Generator Bracket Insulator
Camshaft Position Sensor
Generator
◆ Non-reusable part
P24357

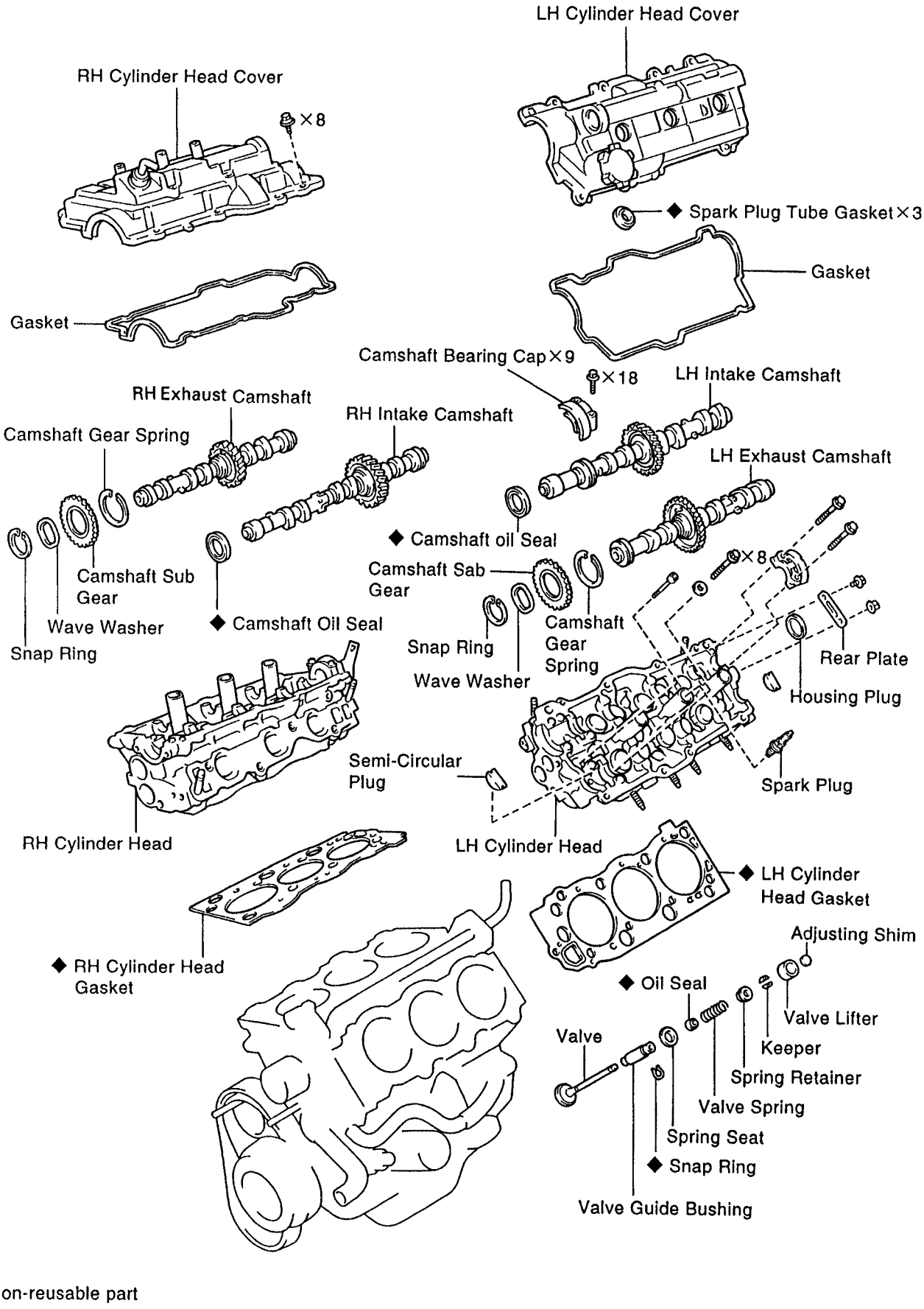

◆ Non-reusable part

P21780

EG

BQ5YC–01

CYLINDER HEADS REMOVAL

1. **REMOVE ENGINE UNDER COVER**
2. **DRAIN ENGINE COOLANT**
3. **REMOVE FRONT EXHAUST PIPE**
   (See step 18 in engine with transmission removal in cylinder block)
4. **DISCONNECT HEATER HOSE**
5. **REMOVE HIGH–TENSION CORDS WITH IGNITION COILS AND SPARK PLUGS**
6. **REMOVE TIMING BELT, CAMSHAFT TIMING PULLEYS AND TIMING BELT IDLER NO.2**
   (See steps 4 to 19, and 20 in timing belt removal)
7. **REMOVE AIR CLEANER CAP, MAF METER AND RESONATOR**
8. **DISCONNECT THESE CABLES:**

(a) w/ Cruise control:
Cruise control actuator cable

(b) Accelerator cable

(c) A/T:
Throttle cable

9. **REMOVE GENERATOR**
   (See generator removal in Charging System)
10. **w/ EGR:**
    REMOVE EGR PIPE
    Remove the 6 nuts, EGR pipe and 2 gaskets.
11. **REMOVE INTAKE CHAMBER STAY**

(a) A/T:
Remove the 2 nuts and bolt, oil filler tube, No.1 thortle cable clamp and O–ring.

(b) Remove the 2 bolts and intake chamber stay.

12. **REMOVE AIR INTAKE CHAMBER ASSEMBLY**

(a) Disconnect these connectors:
- VSV connector for fuel pressure control
- Throttle position sensor connector
- IAC valve connector

w/ EGR:
- EGR gas temperature sensor connector
- VSV connector for EGR

(b) Disconnect these hoses:
(1) 2 PCV hoses
(2) 2 water bypass hoses
(3) Air assist hose from throttle body
(4) 2 Vacuum sensing hoses from VSV
(5) EVAP hose
(6) Air hose from PS pump

w/ A/C:
(7) Air hose from A/C idle–up valve

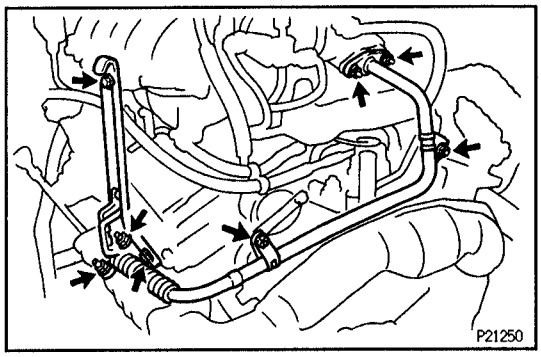

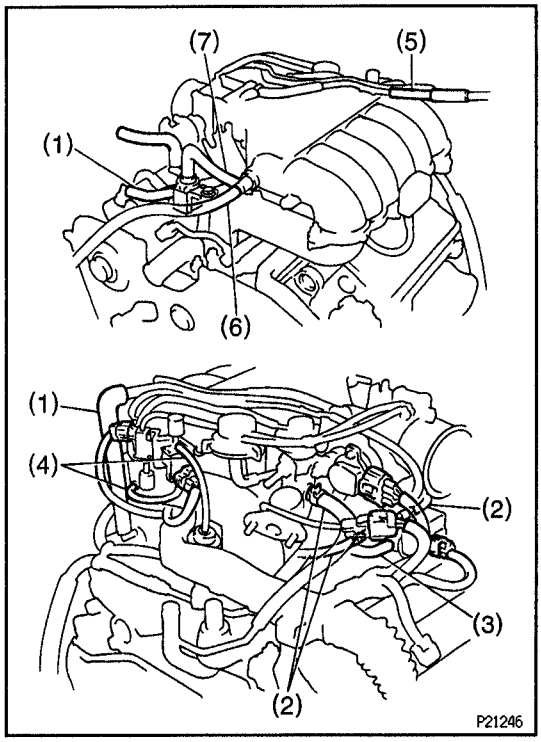

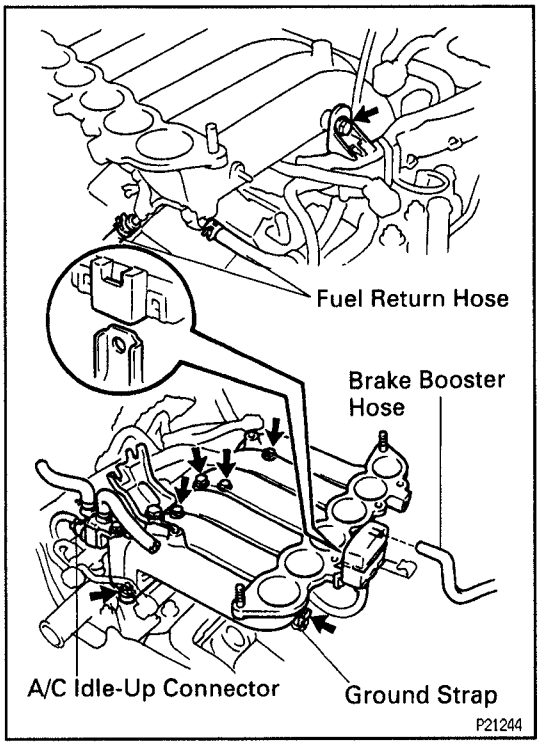

(c) Remove the 4 bolts, 2 nuts, the air intake chamber assembly and gasket.

13. REMOVE INTAKE AIR CONNECTOR

(a) Remove the bolt and disconnect the engine wire.
(b) Disconnect the 2 fuel return hoses.
(c) Disconnect the brake booster vacuum hose from the intake air connector.
(d) Remove the bolt and disconnect the ground strap from the intake air connector.
(e) Disconnect the DLC1 from the bracket.
(f) w/ A/C:
Disconnect the A/C idle–up valve connector.
(g) Remove the 3 bolts and 2 nuts, then intake air connector and gasket.

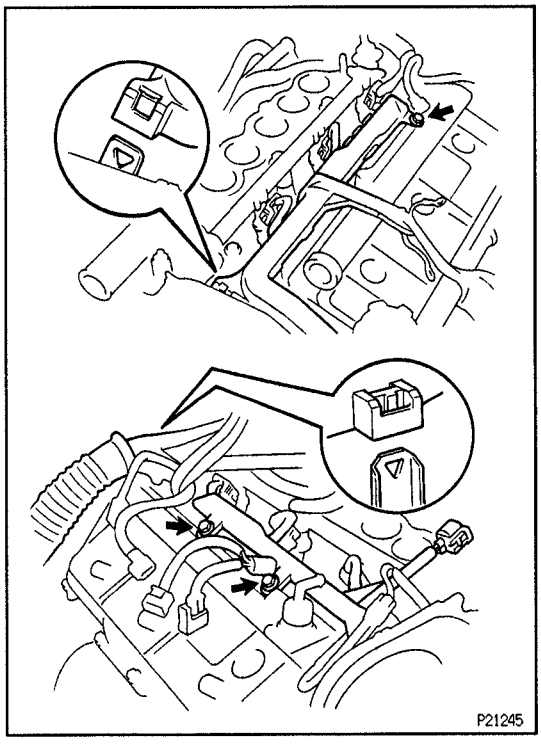

14. DISCONNECT ENGINE WIRE

(a) Disconnect these connectors:
- Oil pressure sensor connector
- Crankshaft position sensor connector
- 6 injector connectors
- ECT sender gauge connector
- ECT sensor connector
- Knock sensor connector
- Camshaft position sensor connector

(b) Disconnect the 3 engine wire clamps.
(c) Remove the 3 bolts, and disconnect the engine wire from the cylinder head.

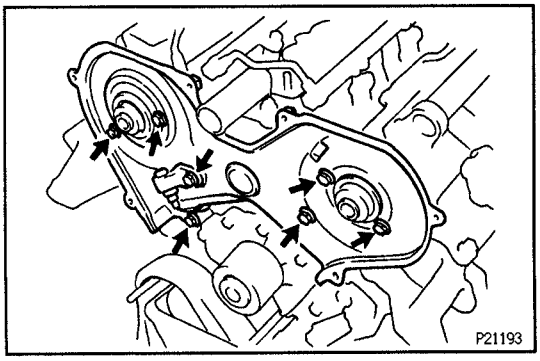

15. REMOVE CAMSHAFT POSITION SENSOR

16. REMOVE NO.3 TIMING BELT COVER

Remove the 6 bolts and timing belt cover.

17. REMOVE FUEL PRESSURE REGULATOR

(See step 4 in fuel pressure regulator removal in SFI System)

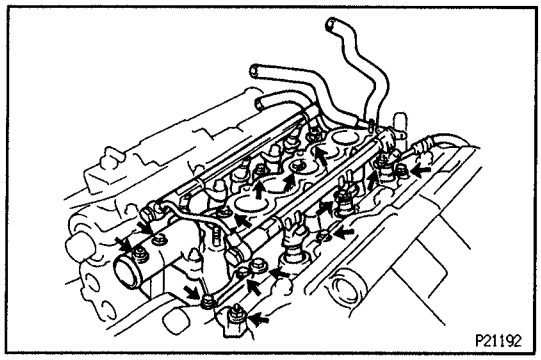

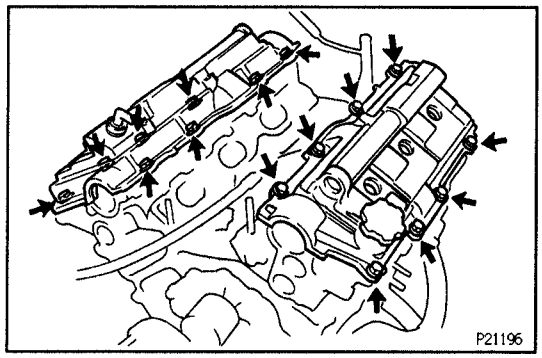

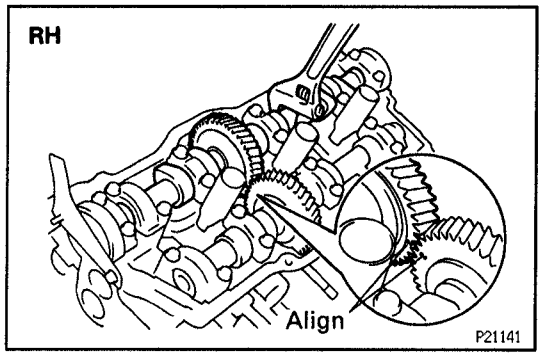

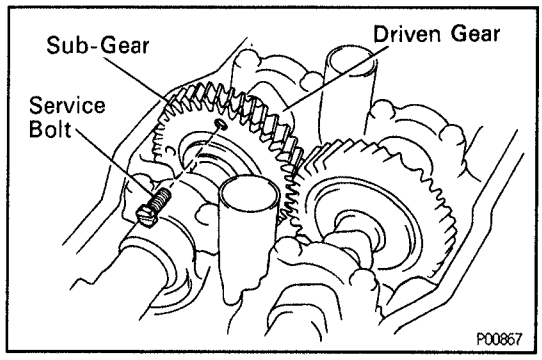

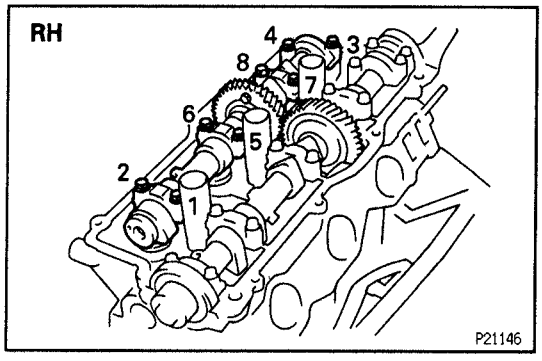

18. REMOVE INTAKE MANIFOLD ASSEMBLY

(a) Disconnect the fuel inlet hose.

(b) Remove the 2 bolts and the intake manifold stay.

(c) Remove the 8 bolts, 4 nuts, 4 plate washers, the intake manifold, delivery pipes and injectors assembly and 2 gaskets.

19. REMOVE PS PUMP BRACKET

20. REMOVE GENERATOR BRACKET

21. REMOVE EXHAUST CROSSOVER PIPE

Remove the 6 nuts, crossover pipe and 2 gaskets.

22. REMOVE EXHAUST MANIFOLDS

(a) Remove the 6 nuts and exhaust manifold heat insulators.

(b) Remove the 12 nuts, exhaust manifolds and gaskets.

23. REMOVE CYLINDER HEAD COVERS

Remove the 8 bolts, seal washers, cylinder head cover and gasket. Remove the 2 cylinder head covers.

24. REMOVE CAMSHAFTS

NOTICE: Since the thrust clearance of the camshaft is small, the camshaft must be kept level while it is being removed. If the camshaft is not kept level, the portion of the cylinder head receiving the shaft thrust may crack or be damaged, causing the camshaft to seize or break. To avoid this, these steps should be carried out.

A. Remove exhaust camshaft of RH cylinder head

(a) Boring the service bolt hole of the driven sub–gear upward by turning the hexagon wrench head portion of the exhaust camshaft with a wrench.

(b) Align the timing marks (2 dot marks) of the camshaft drive and driven gears by turning the camshaft with a wrench.

(c) Secure the exhaust camshaft sub–gear to the main gear with a service bolt.

Recommended service bolt:

Thread diameter	6 mm
Thread pitch	1.0 mm
Bolt length	16 – 20 mm

HINT: When removing the camshaft, make sure that the torsional spring force of the sub–gear has been eliminated by the above operation.

(d) Uniformly loosen and remove the 8 bearing cap bolts, in several passes, in the sequence shown.

(e) Remove the 4 bearing caps and exhaust camshaft.

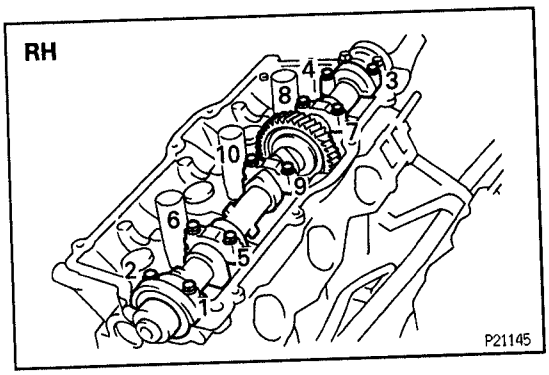

B. Remove intake camshaft of RH cylinder head

(a) Uniformly loosen and remove the 10 bearing cap bolts, in several passes, in the sequence shown.

(b) Remove the 5 bearing caps, oil seal and intake camshaft.

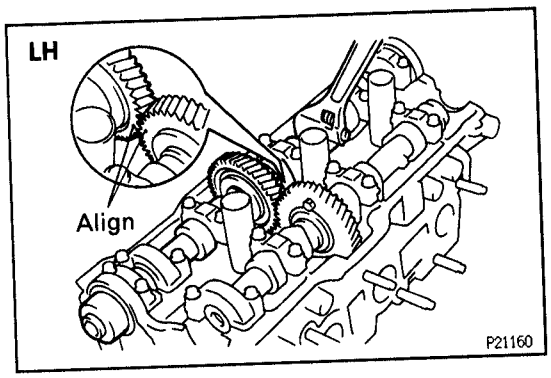

C. Remove exhaust camshaft of LH cylinder head

(a) Align the timing marks (1 dot mark) of the camshaft drive and driven gears by turning the camshaft with a wrench.

(b) Secure the exhaust camshaft sub–gear to the main gear with a service bolt.
(See step (c) in step A)

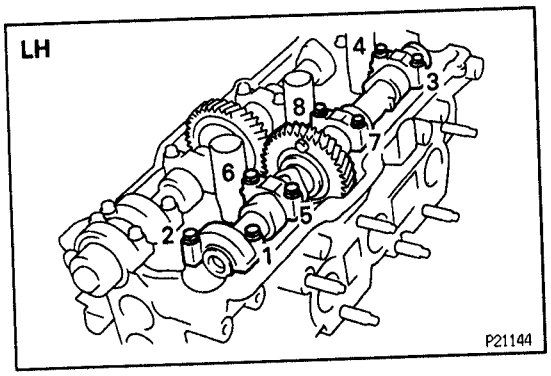

(c) Uniformly loosen and remove the 8 bearing cap bolts, in several passes, in the sequence shown.

(d) Remove the 4 bearing caps and exhaust camshaft.

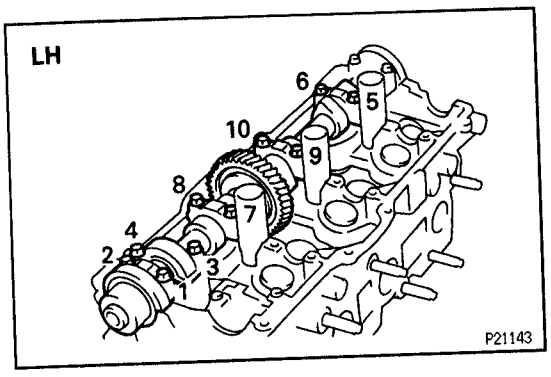

D. Remove intake camshaft of LH cylinder head

(a) Uniformly loosen and remove the 10 bearing cap bolts, in several passes, in the sequence shown.

(b) Remove the 5 bearing caps, oil seal and intake camshaft.
HINT:
- Arrange the camshafts in the correct order.
- Arrange the bearing caps in the correct order.

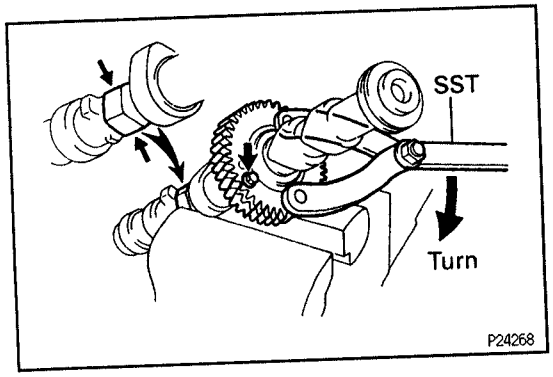

25. DISASSEMBLE EXHAUST CAMSHAFTS

(a) Mount the hexagonal wrench head portion of the camshaft in a vise.
NOTICE: Be careful not to damage the camshaft.

(b) Using SST, turn the sub–gear clockwise and remove the service bolt.
SST 09960–10010 (09962–01000, 09963–00600)

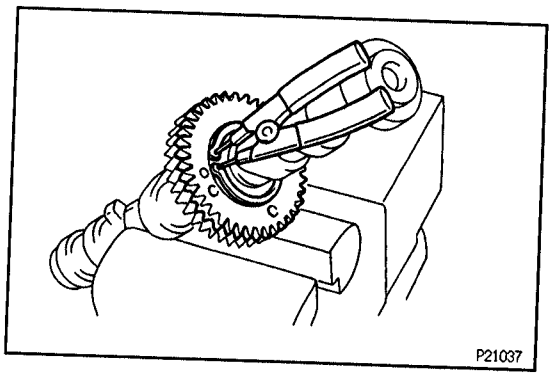

(c) Using snap ring pliers, remove the snap ring.
(d) Remove these parts:
- Wave washer
- Camshaft sub–gear
- Camshaft gear spring

HINT: Arrange the camshaft sub–gears and gear springs (RH and LH side).

EG

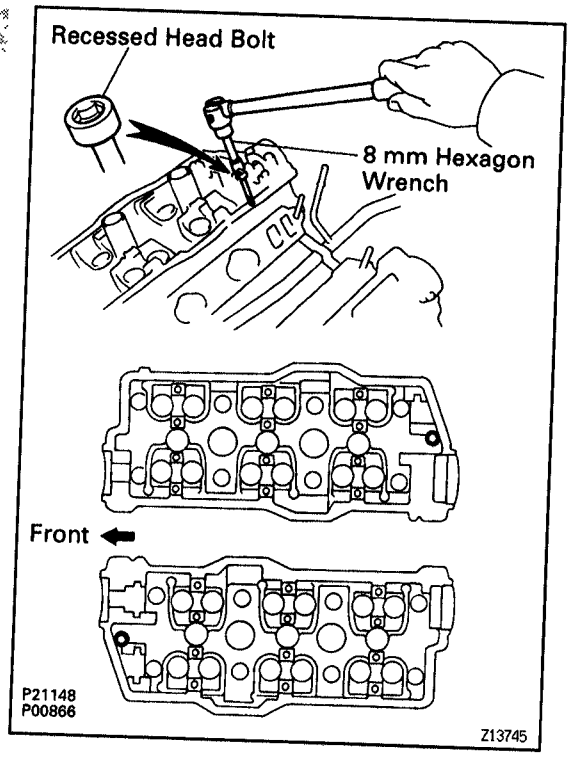

26. REMOVE CYLINDER HEADS

(a) Remove the bolt and disconnect the ground strap.
(b) Using an 8 mm hexagon wrench, remove the cylinder head (recessed head) bolt on each cylinder head, then repeat for the other side, as shown.

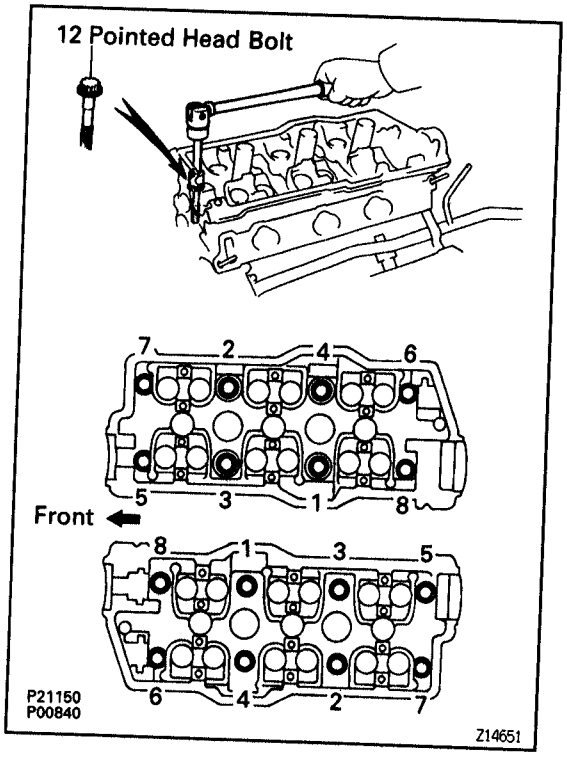

(c) Uniformly loosen and remove the 8 cylinder head (12 pointed head) bolts on each cylinder head, in several passes, in the sequence shown, then repeat for the other side, as shown. Remove the 16 cylinder head bolts and plate washers.

NOTICE: Head warpage or cracking could result from removing bolts in an incorrect order.

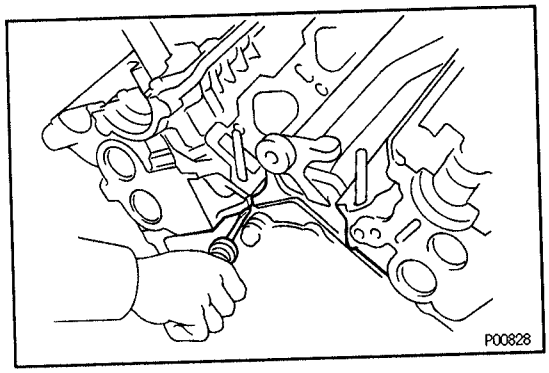

(d) Lift the cylinder head from the dowels on the cylinder block and place the 2 cylinder heads on wooden blocks on a bench.
HINT:
- If the cylinder head is difficult to lift off, pry between the cylinder head and cylinder block with a screwdriver.
- Arrange the cylinder heads in the correct order.

NOTICE: Be careful not to damage the contact surfaces of the cylinder head and cylinder block.

EG6YD–01

CYLINDER HEADS DISASSEMBLY

EG

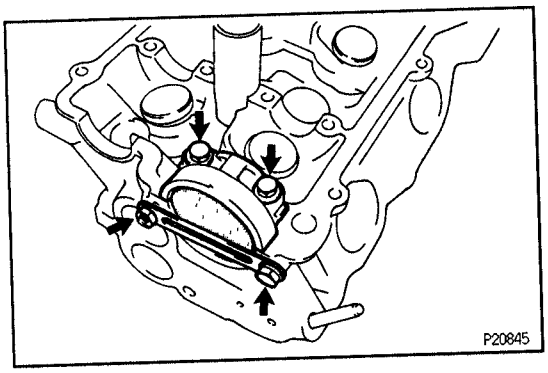

1. REMOVE CAMSHAFT HOUSING PLUGS

(a) Remove the bolt, nut, cylinder head rear plate and ground strap.
(b) Remove the 2 bolts and camshaft bearing cap.
(c) Remove the housing plug.

2. REMOVE VALVE LIFTERS AND SHIMS

Pull out the valve lifter and shim by hand.
HINT: Arrange the valve lifters and shims in correct order.

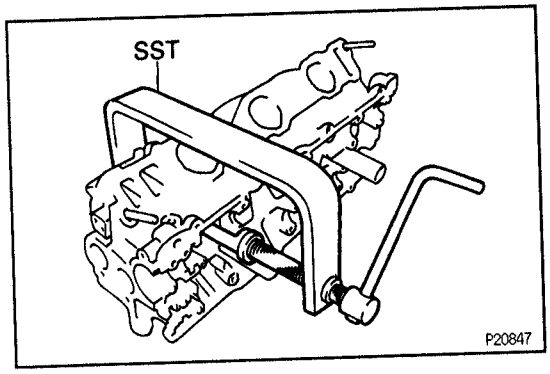

3. REMOVE VALVES

(a) Using SST, compress the valve spring and remove the 2 keepers.
SST 09202–70020 (09202–00010)
(b) Remove these parts:
- Spring retainer
- Valve spring
- Valve

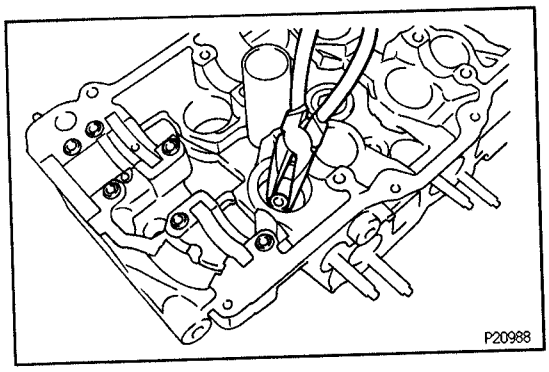

(c) Using needle–nose pliers, remove the oil seal.

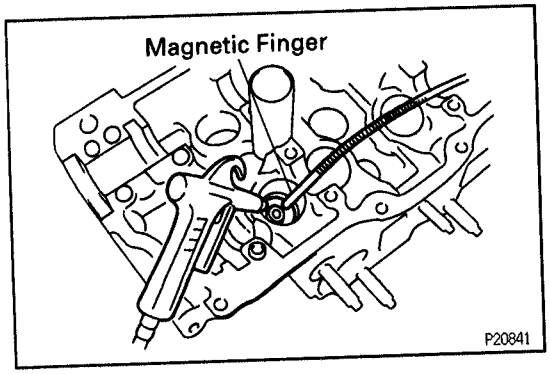

(d) Using compressed air and a magnetic finger, remove the spring seat by blowing air.
HINT: Arrange the valves, valve springs, spring seats and spring retainers in the correct order.

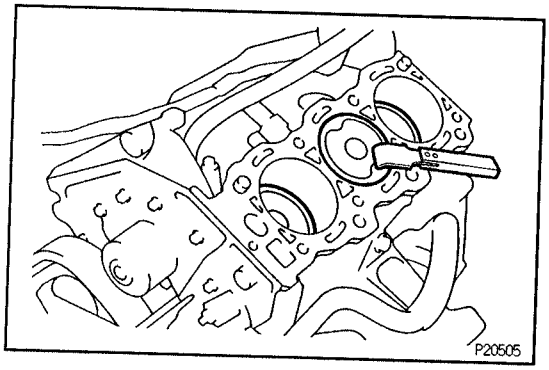

CYLINDER HEAD COMPONENTS INSPECTION, CLEANING AND REPAIR

EG5YE–01

1. CLEAN TOP SURFACES OF PISTONS AND CYLINDER BLOCK

(a) Turn the crankshaft and bring each piston to top dead center (TDC). Using a gasket scraper, remove all the carbon from the piston top surfaces.

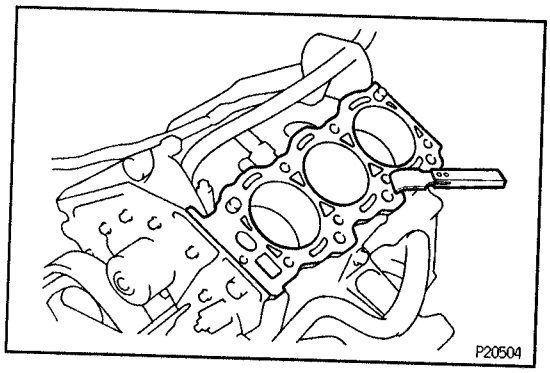

(b) Using a gasket scraper, remove all the gasket material from the cylinder block surfaces.

(c) Using compressed air, blow carbon and oil from the bolt holes.

CAUTION: Protect your eyes when using high – compressed air.

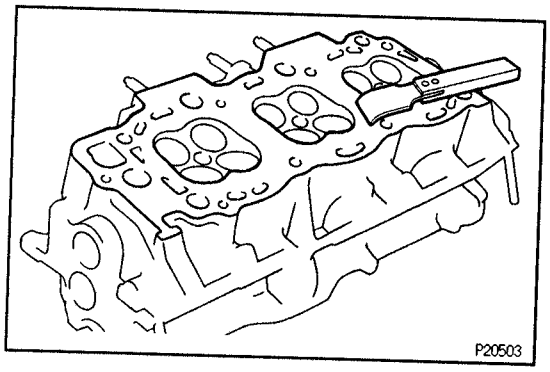

2. CLEAN CYLINDER HEADS

A. Remove gasket material

Using a gasket scraper, remove all the gasket material from the cylinder block contact surface.

NOTICE: Be careful not to scratch the cylinder block contact surfaces.

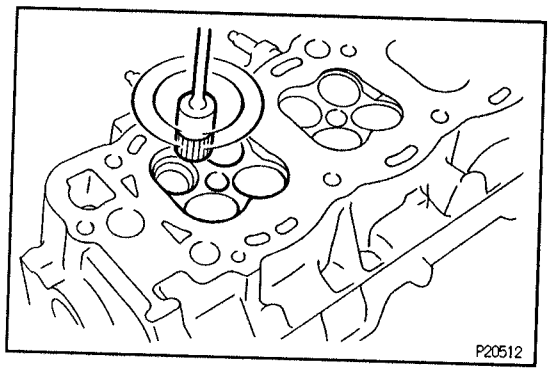

B. Clean combustion chambers

Using a wire brush, remove all the carbon from the combustion chambers.

NOTICE: Be careful not to scratch the cylinder block contact surfaces.

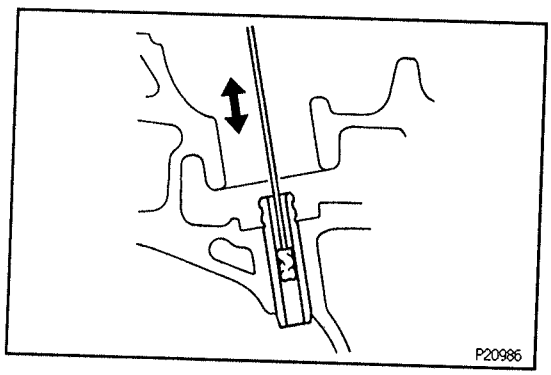

C. Clean valve guide bushings

Using a valve guide bushing brush and solvent, clean all the guide bushings.

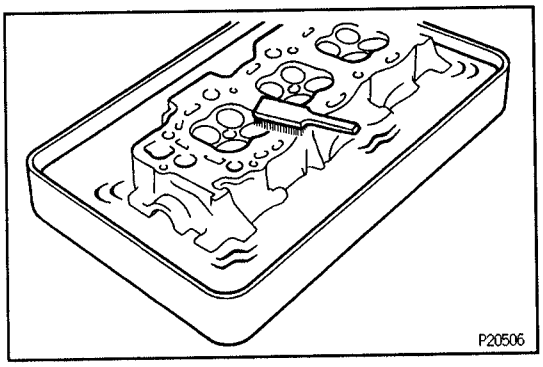

D. Clean cylinder heads

Using a soft brush and solvent, thoroughly clean the cylinder heads.

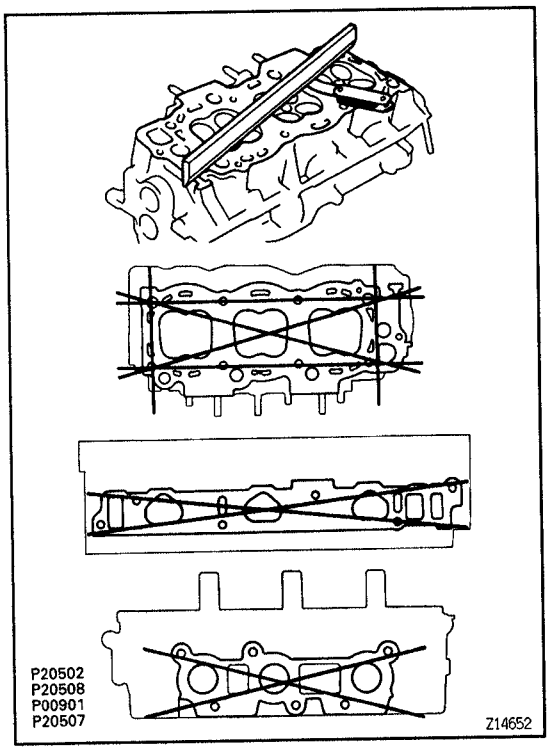

3. INSPECT CYLINDER HEADS

EG

A. Inspect for flatness

Using precision straight edge and feeler gauge, measure the surfaces contacting the cylinder block and manifolds for warpage.

Maximum warpage:

0.10 mm (0.0039 in.)

If warpage is greater than the maximum, replace the cylinder head.

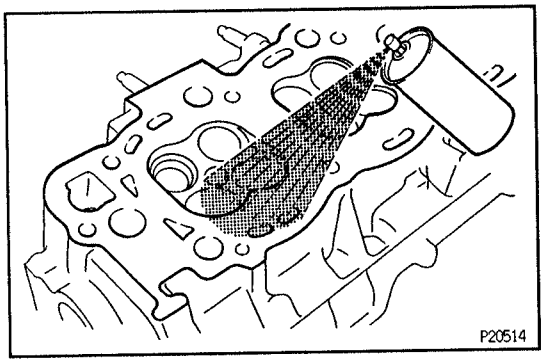

B. Inspect for cracks

Using a dye penetrant, check the combustion chamber, intake ports, exhaust ports and cylinder block surface for cracks.

If cracked, replace the cylinder head.

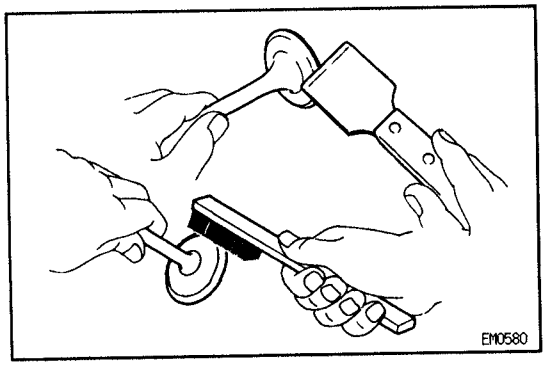

4. CLEAN VALVES

(a) Using a gasket scraper, chip off any carbon from the valve head.

(b) Using a wire brush, thoroughly clean the valve.

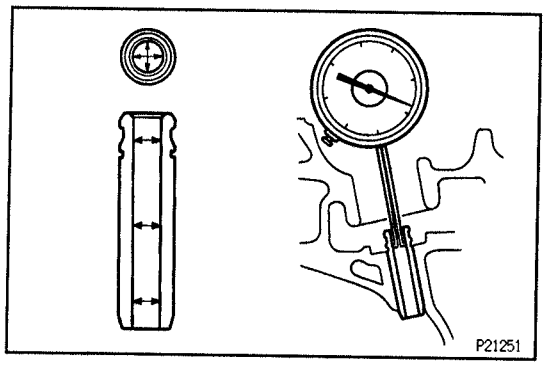

5. INSPECT VALVE STEMS AND GUIDE BUSHINGS

(a) Using a caliper gauge, measure the inside diameter of the guide busing.

Bushing inside diameter:

6.010 – 6.030 mm (0.2366 – 0.2374 in.)

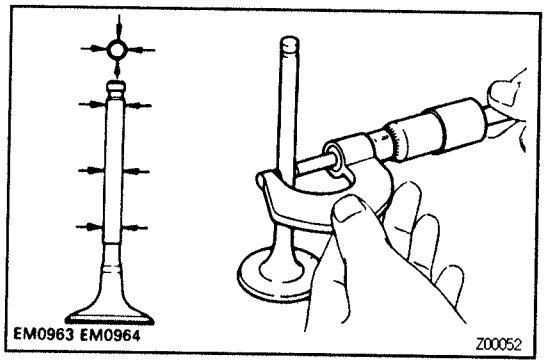

(b) Using a micrometer, measure the diameter of the valve stem.

Valve stem diameter:

Intake

5.970 – 5.985 mm (0.2350 – 0.2356 in.)

Exhaust

5.965 – 5.980 mm (0.2348 – 0.2354 in.)

(c) Subtract the valve stem diameter measurement from the guide bushing inside diameter measurement.

Standard oil clearance:

Intake

0.025 – 0.060 mm (0.0010 – 0.0024 in.)

Exhaust

0.030 – 0.065 mm (0.0012 – 0.0026 in.)

maximum oil clearance:

Intake

0.08 mm (0.0031 in.)

Exhaust

0.10 mm (0.0039 in.)

If the clearance is greater than the maximum, replace the valve and guide bushing.

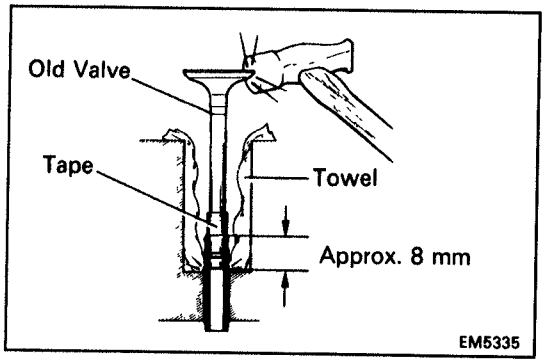

6. IF NECESSARY, REPLACE VALVE GUIDE BUSHINGS

(a) w/ Snap ring:

Insert an old valve wrapped with tape into the valve guide bushing, and break off the valve guide bushing by hitting it with a hammer. Remove the snap ring.

HINT: Wrap the tape approx. 8 mm (0.31 in.) from the valve stem end.

NOTICE: Be careful not to damage the valve lifter hole.

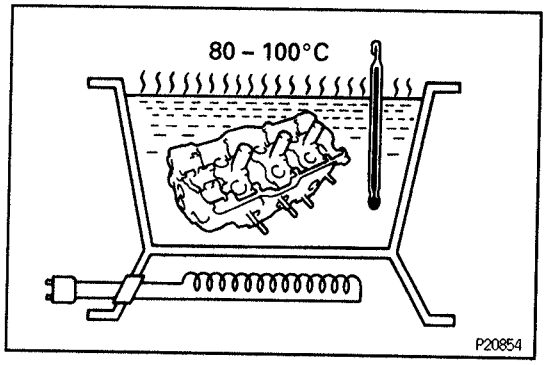

(b) Gradually heat the cylinder head to 80 – 100°C(176 – 212°F).

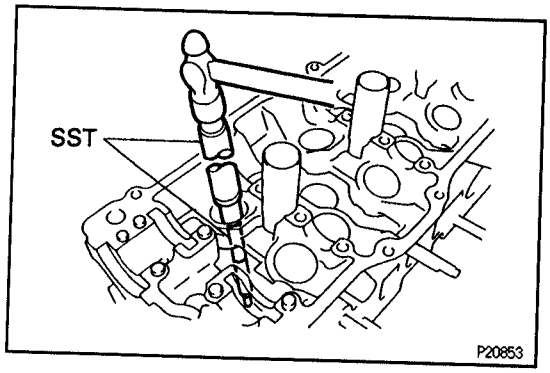

(c) Using SST and a hammer, tap out the guide bushing.
SST 09201–10000 (09201–01060),
09950–70010 (09951–07150)

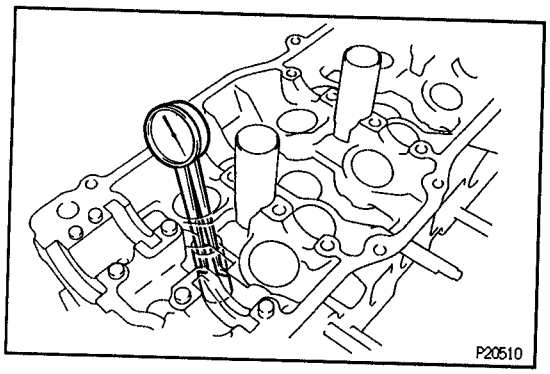

(d) Using a caliper gauge, measure the bushing bore diameter of the cylinder head.

EG

Both intake and exhaust

Bushing bore diameter mm (in.)	Bushing size
10.985 – 11.027 (0.4325 – 0.4341)	Use STD
11.050 – 11.077 (0.4350 – 0.4361)	Use O/S 0.05

V06270

(e) Select a new guide bushing (STD size or O/S 0.05).
If the bushing bore diameter of the cylinder head is greater than 11.027 mm (0.4341 in.), machine the bushing bore to these dimension:
11.050 – 11.077 mm (0.4350 – 0.4361 in.)
If the bushing bore diameter of the cylinder head is greater than 11.077 mm (0.4361 in.), replace the cylinder head.

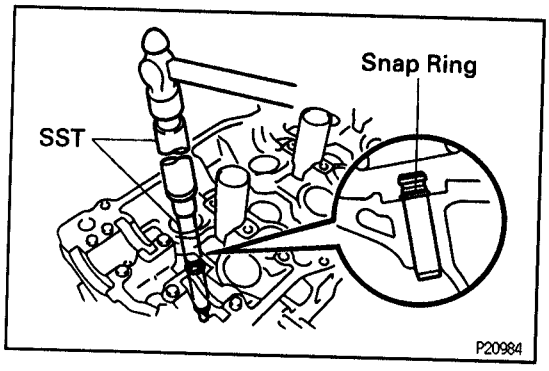

(f) Gradually heat the cylinder head to 80 – 100°C (176 – 212°F).

(g) Using SST and a hammer, tap in a new guide bushing until the snap ring makes contact with the cylinder head.
SST 09201–10000 (09201–01060),
09950–70010 (09951–07150)

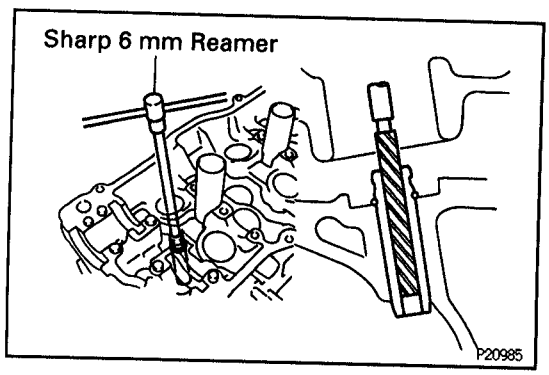

(h) Using a sharp 6 mm reamer, ream the guide bushing to obtain the standard specified clearance (See step 5) between the guide bushing and valve stem.

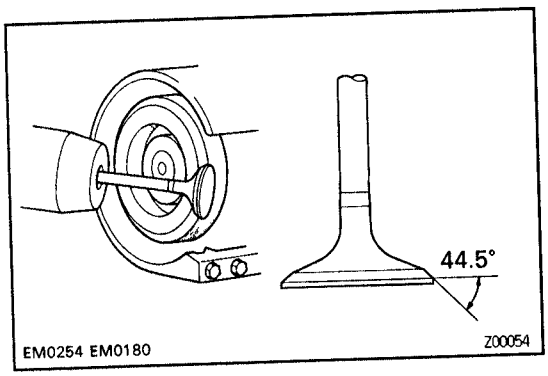

7. INSPECT AND GRIND VALVES

(a) Grind the valve enough to remove pits and carbon.

(b) Check that the valve is ground to the correct valve face angle.

Valve face angle:

44.5°

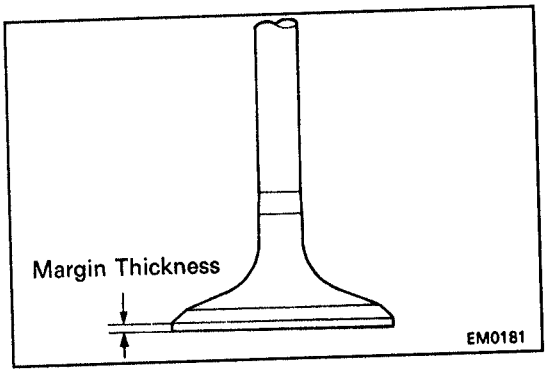

(c) Check the valve head margin thickness.

Standard margin thickness:

1.0 mm (0.039 in.)

Minimum margin thickness:

0.5 mm (0.020 in.)

If the margin thickness is less than the minimum, replace the valve.

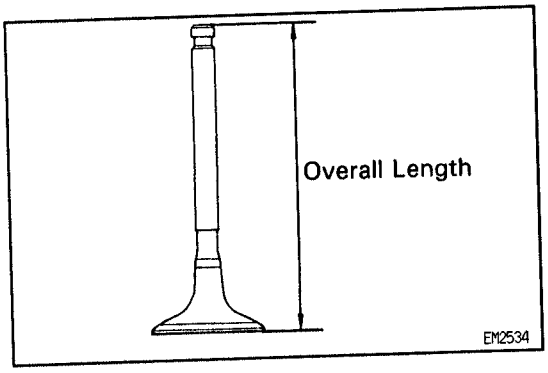

(d) Check the valve overall length.

Standard overall length:

Intake

95.15 mm (3.7461 in.)

Exhaust

94.90 mm (3.7362 in.)

Minimum overall length:

Intake

94.60 mm (3.7244 in.)

Exhaust

94.40 mm (3.7165 in.)

If the overall length is less than the minimum, replace the valve.

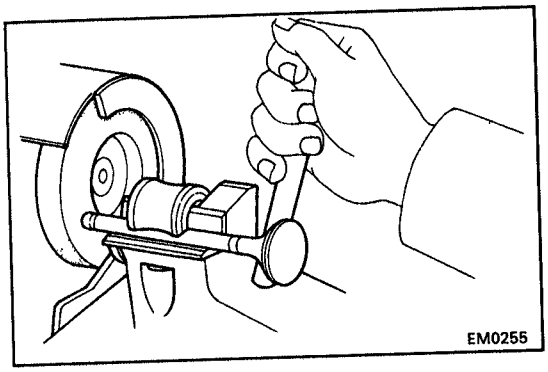

(e) Check the surface of the valve stem tip for wear.

If the valve stem tip is worn, resurface the tip with a grinder or replace the valve.

NOTICE: Do not grind off more than the minimum.

8. INSPECT AND CLEAN VALVE SEATS

(a) Using a 45° carbide cutter, resurface the valve seats. Remove only enough metal to clean the seats.

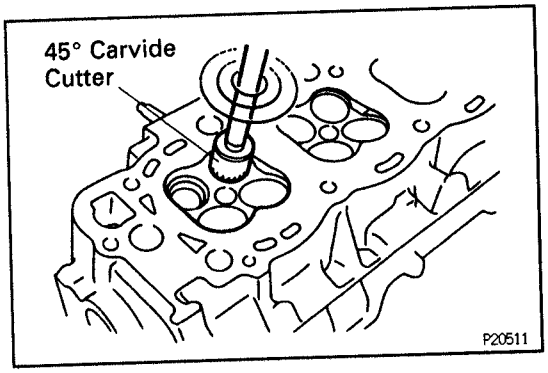

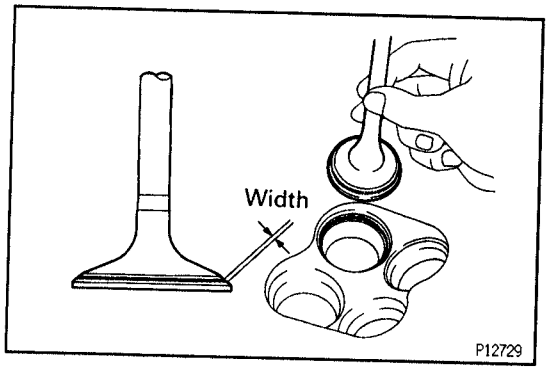

(b) Check the valve seating position.
Apply a thin coat of prussian blue (or white lead) to the valve face. Lightly press the valve against the seat. Do not rotate the valve.

(c) Check the valve face and seat for the following:
- If blue appears 360° around the face, the valve is concentric. If not, replace the valve.
- If blue appears 360° around the valve seat, the guide and face are concentric. If not, resurface the seat.
- Check that the seat contact is in the middle of the valve face with these width.

1.0 – 1.4 mm (0.039 – 0.055 in.)

If not, correct the valve seats as follows:

(1) If the seating is too high on the valve face, use 30° and 45° cutters to correct the seat.

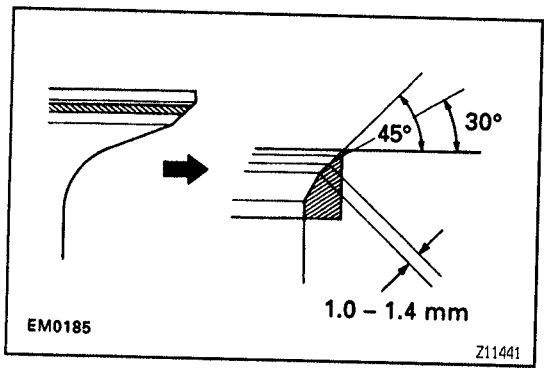

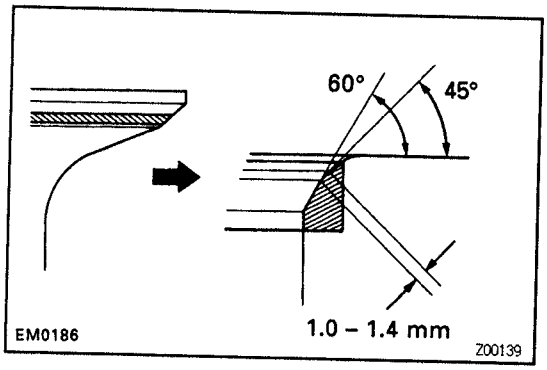

(2) If the seating is too low on the valve face, use 60° and 45° cutters to correct the seat.

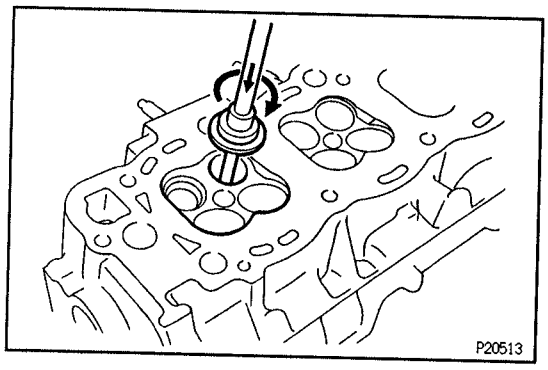

(d) Hand–lap the valve and valve seat with an abrasive compound.

(e) After hand–lapping, clean the valve and valve seat.

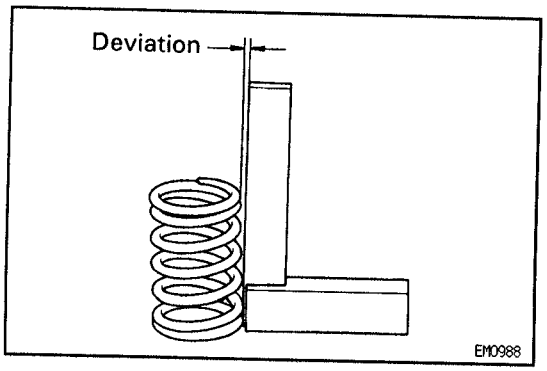

9. INSPECT VALVE SPRINGS

(a) Using a steel square, measure the squareness of the valve spring.

Maximum deviation:

2.0 mm (0.079 in.)

If deviation is greater than the maximum, replace the valve spring.

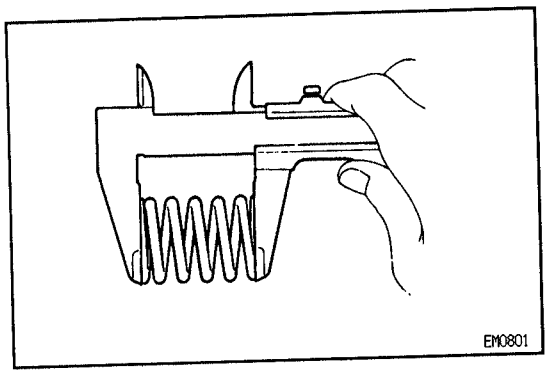

(b) Using vernier calipers, measure the free length of the valve spring.

Free length:

44.78 mm (1.7630 in.)

If the free length is not as specified, replace the valve spring.

EG

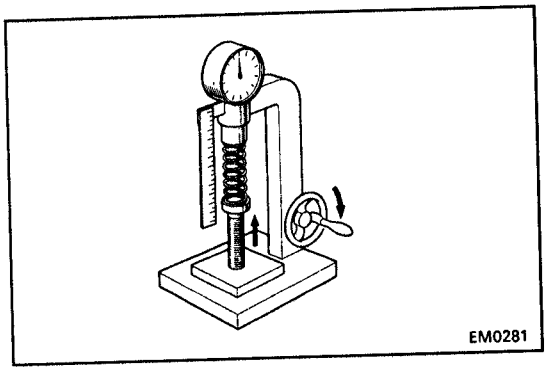

(c) Using a spring tester, measure the tension of the valve spring at the specified installed length.

Installed tension:

At 33.3 mm (1.311 in.):

186 – 206 N (19.0 – 21.0 kgf, 41.9 – 46.3 lbf)

If the installed tension is not as specified, replace the valve spring.

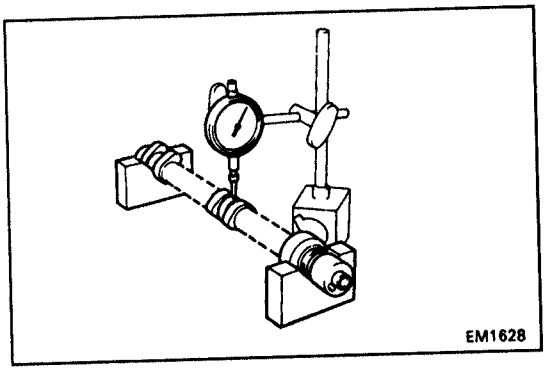

10. INSPECT CAMSHAFTS AND BEARINGS

A. Inspect camshaft for runout

(a) Place the camshaft on V-blocks.

(b) Using a dial indicator, measure the circle runout at the center journal.

Maximum circle runout:

0.06 mm (0.0024 in.)

If the circle runout is greater than the maximum, replace the camshaft.

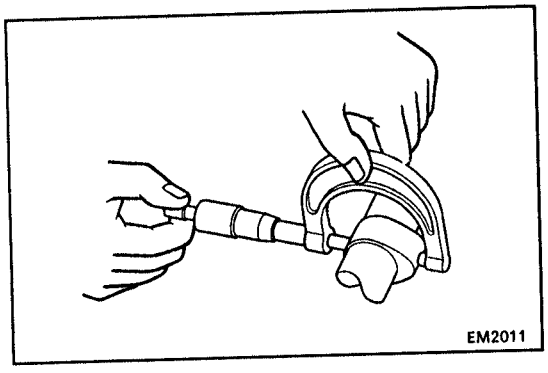

B. Inspect cam lobes

Using a micrometer, measure the cam lobe height.

Standard cam lobe height:

Intake

42.31 – 42.41 mm (1.6657 – 1.6697 in.)

Exhaust

41.96 – 42.06 mm (1.6520 – 1.6559 in.)

Minimum cam lobe height:

Intake

42.16 mm (1.6598 in.)

Exhaust

41.81 mm (1.6461 in.)

If the cam lobe height is greater than the maximum, replace the camshaft.

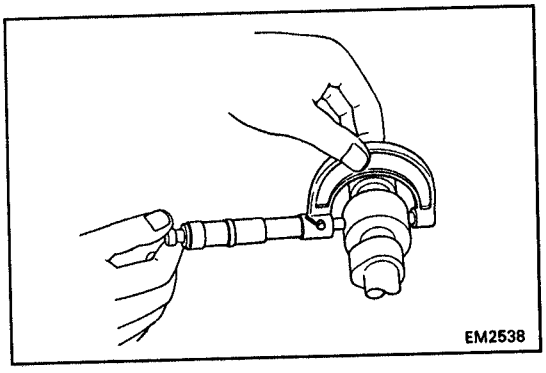

C. Inspect camshaft journals

Using a micrometer, measure the journal diameter.

Journal diameter:

26.949 – 26.965 mm (1.0610 – 1.0616 in.)

If the journal diameter is not as specified, check the oil clearance.

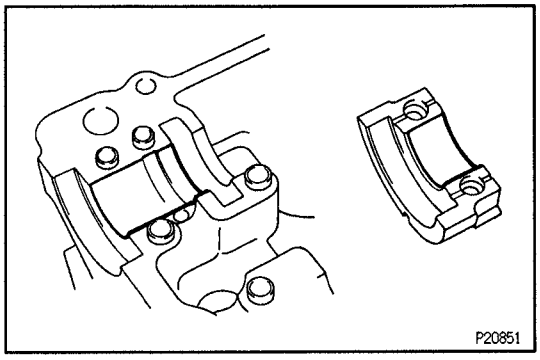

D. Inspect camshaft bearings

Check the bearings for flaking and scoring.

If the bearings are damaged, replace the bearing caps and cylinder head as a set.

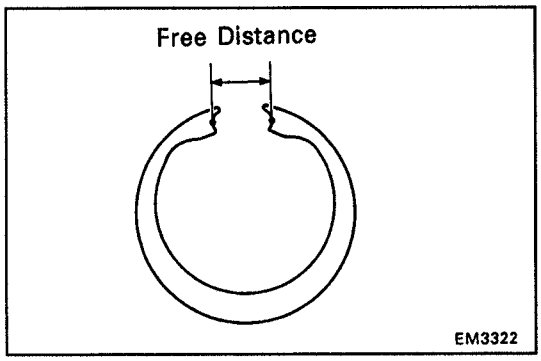

E. Inspect camshaft gear spring

Using a vernier caliper, measure the free distance between the spring end.

Free distance:

18.2 – 18.8 mm (0.712 – 0.740 in.)

If the free distance is not as specified, replace the gear spring.

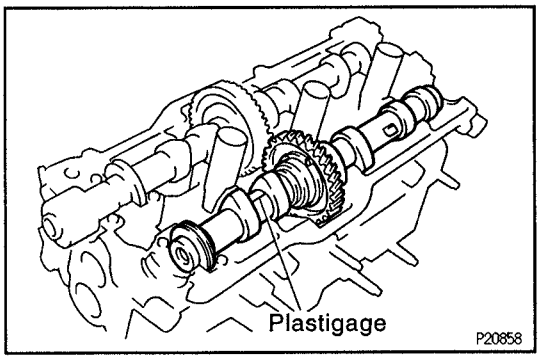

F. Inspect camshaft journal oil clearance

(a) Clean the bearing caps and camshaft journals.

(b) Place the camshafts on the cylinder head.

(c) Lay a strip of Plastigage across each of the camshaft journals.

(d) Install the bearing caps.
(See step 3 in cylinder heads installation)
Torque: 16 N·m (160 kgf·cm, 12 ft·lbf)
NOTICE: Do not turn the camshaft.

(e) Remove the bearing caps.

(f) Measure the Plastigage at its widest point.
Standard oil clearance:
0.035 – 0.072 mm (0.0014 – 0.0028 in.)
Maximum oil clearance:
0.10 mm (0.0039 in.)
If the oil clearance is greater than the maximum, replace the camshaft. If necessary, replace the bearing caps and cylinder head as a set.

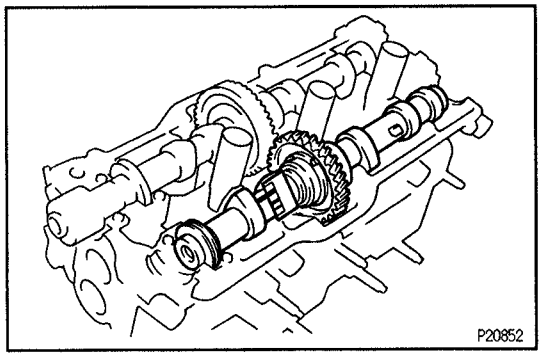

(g) Completely remove the Plasitgage.

G. Inspect camshaft thrust clearance

(a) Install the camshafts.
(See step 3 in cylinder heads installation)

(b) Using a dial indicator, measure the thrust clearance while moving the camshaft back and forth.
Standard thrust clearance:
0.033 – 0.080 mm (0.0013 – 0.0031 in.)
Maximum thrust clearance:
0.12 mm (0.0047 in.)

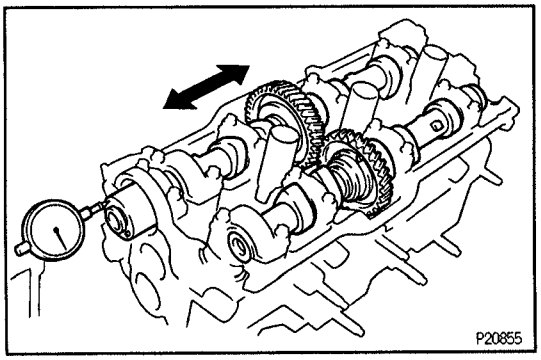

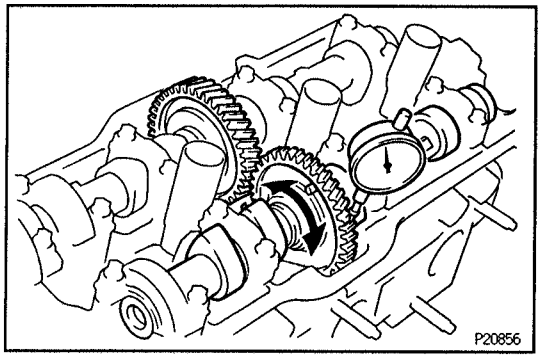

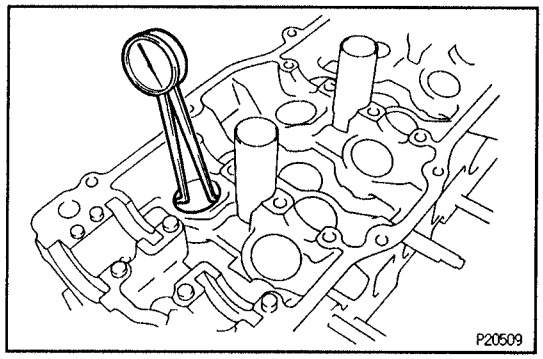

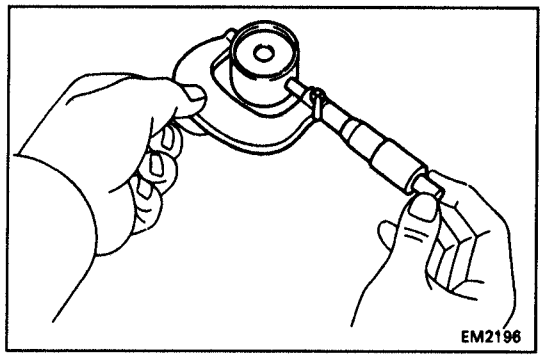

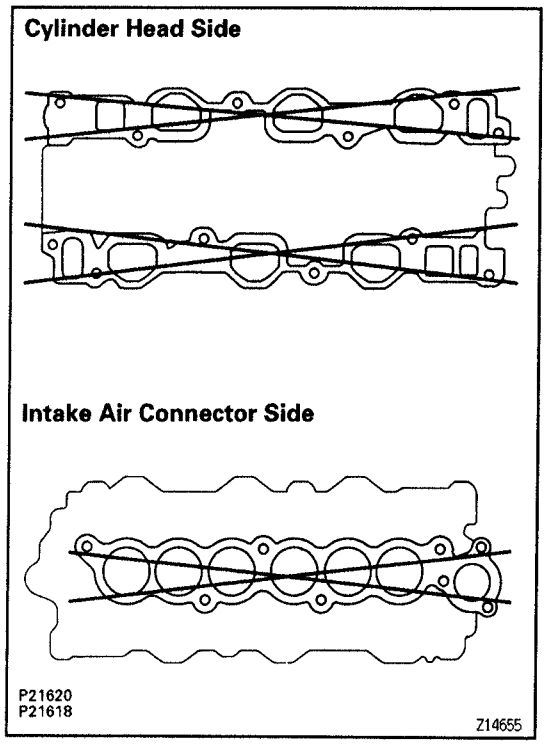

If the thrust clearance is greater than the maximum, replace the camshaft. If necessary, replace the bearing caps and cylinder head as a set.

H. Inspect camshaft gear backlash

(a) Install the camshafts without installing the exhaust camshaft sub-gear.
(See step 3 in cylinder heads installation)

(b) Using a dial indicator, measure the backlash.
Standard backlash:
0.020 – 0.200 mm (0.0008 – 0.0079 in.)
Maximum backlash:
0.30 mm (0.0188 in.)
If the backlash is greater than the maximum, replace the camshafts.

11. INSPECT VALVE LIFTERS AND LIFTER BORES

(a) Using a caliper gauge, measure the lifter bore diameter of the cylinder head.
Lifter bore diameter:
31.000 – 31.018 mm (1.2205 – 1.2212 in.)

(b) Using a micrometer, measure the lifter diameter.
Lifter diameter:
30.966 – 30.976 mm (1.2191 – 1.2195 in.)

(c) Subtract the lifter diameter measurement from the lifter bore diameter measurement.
Standard oil clearance:
0.024 – 0.052 mm (0.0009 – 0.0020 in.)
Maximum oil clearance:
0.08 mm (0.0031 in.)
If the oil clearance is greater than the maximum, replace the lifter. Ifnecessary, replace the cylinder head.

12. INSPECT INTAKE MANIFOLD, EXHAUST MANIFOLDS, AIR INTAKE CHAMBER AND INTAKE AIR CONNECTOR

(a) Intake Manifold:
Using precision straight edge and thickness gauge, measure the surfaces contacting the cylinder head and intake air connector for warpage.
Maximum warpage:
0.10 mm (0.0039 in.)
If warpage is greater than the maximum, replace the intake manifold.

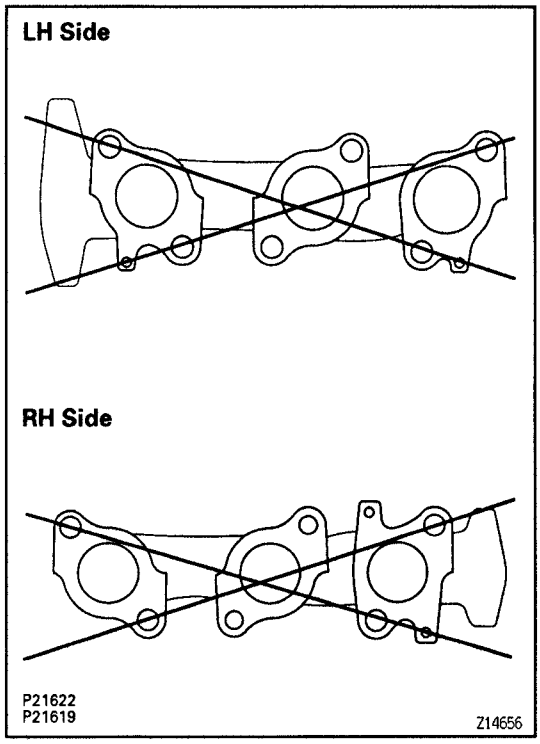

(b) Exhaust Manifolds:
Measure the surfaces contacting the cylinder head for warpage.
Maximum warpage:
1.00 mm (0.0394 in.)
If warpage is greater than the maximum, replace the exhaust manifold.

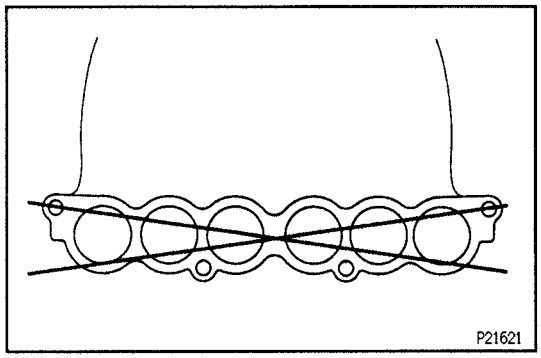

(c) Air intake chamber and intake air connector:
Measure the surfaces contacting the intake manifold and intake air connector for warpage.
Maximum warpage:
0.10 mm (0.0039 in.)
If warpage is greater than the maximum, replace the air intake chamber or intake air connector.

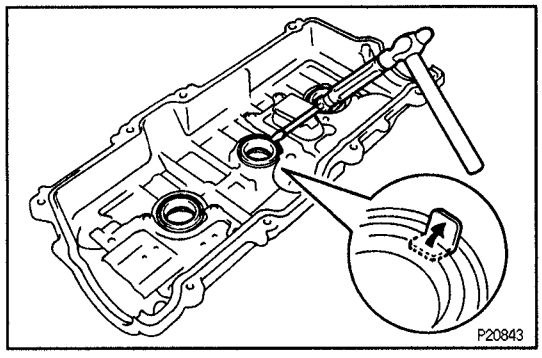

13. IF NECESSARY, REPLACE SPARK PLUG TUBE GASKETS

(a) Bend up the tab on the ventilation baffle plate which prevents the gasket from the slipping out.

(b) Using a screwdriver and hammer, tap out the gasket.
NOTICE: Do not scratch or damage the joint of the cylinder head cover.

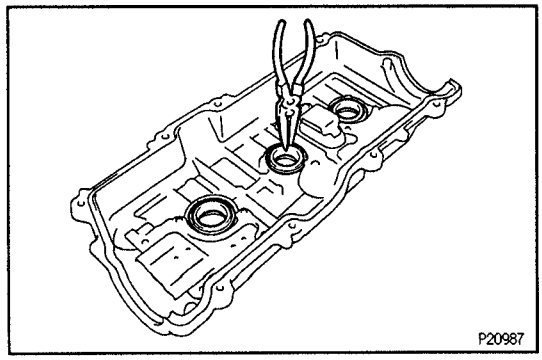

(c) Using needle–nose pliers, pry out the gasket.

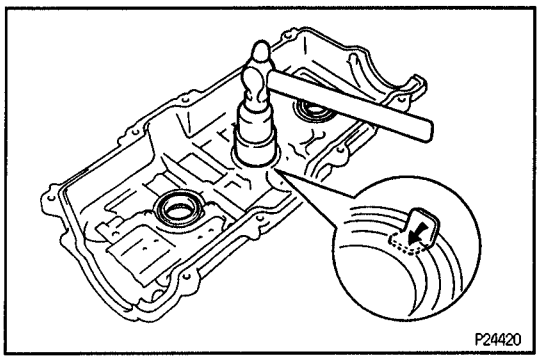

(d) Using a 32 mm scoket wrench and hammer, tap in a new gasket until its surface is flush with the upper edge of the cylinder head cover.
(e) Apply a light coat of MP grease to the gasket lip.
(f) Return the ventilation plate tab to its original position.

EG

CYLINDER HEADS ASSEMBLY

EG5BC-04

HINT:
- Thoroughly clean all parts to be assembled.
- Before installing the parts, apply new engine oil to all sliding and rotating surfaces.
- Replace all gaskets and oil seals with new ones.

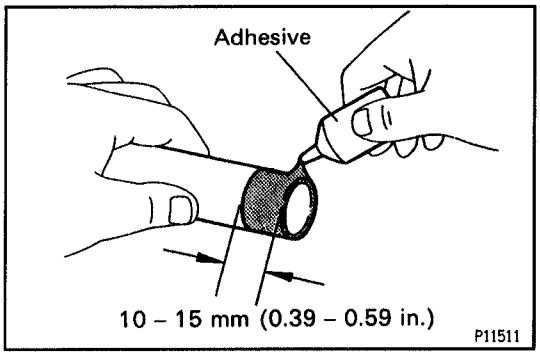

1. INSTALL SPARK PLUG TUBES

HINT: When using a new cylinder head, spark plug tubes must be installed.

(a) Apply adhesive to the end of the spark plug tube.
Adhesive:
Part No. 08833-00070, THREE BOND 1324 or equivalent

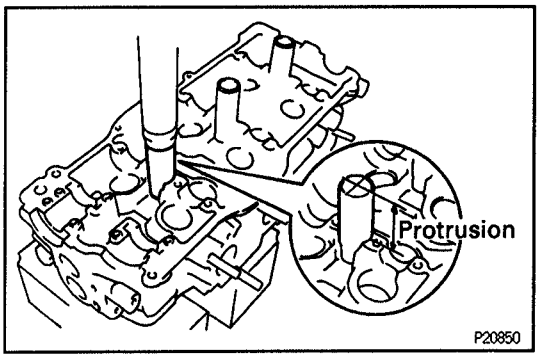

(b) Using a press, press in a new spark plug tube until there is 49.0 – 49.4 mm (1.929 – 1.945 in.) protruding from the camshaft bearing cap installation surface of the cylinder head.
NOTICE: Avoid pressing a new spark plug tube in too far by measuring the amount of the protrusion while pressing.

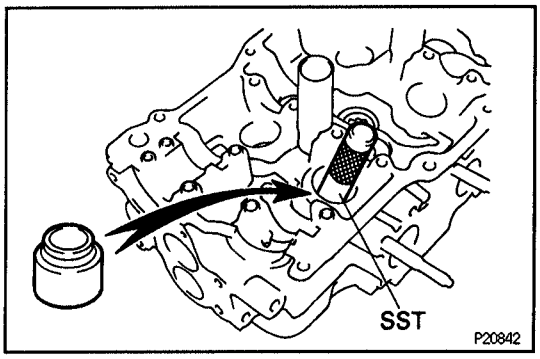

2. INSTALL VALVES

(a) Using SST, push in a new oil seal.
SST 09201-41020

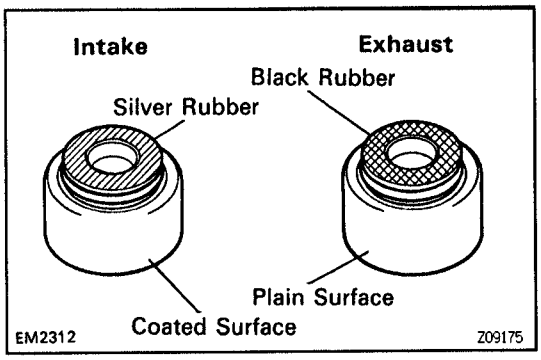

HINT: The intake valve oil seal is silver and the exhaust valve oil seal is black.

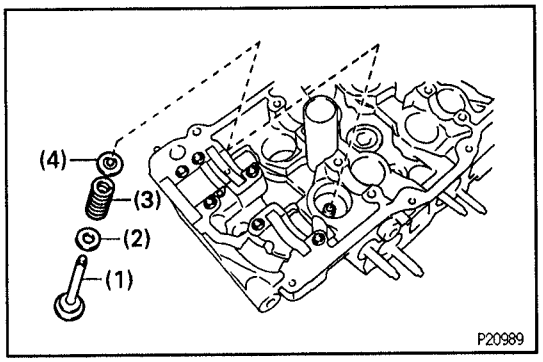

(b) Install these parts:
(1) Valve
(2) Spring seat
(3) Valve spring
(4) Spring retainer

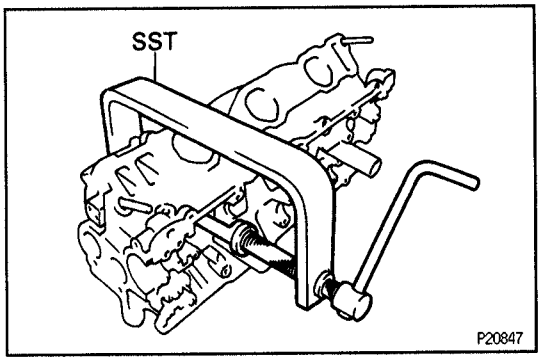

(c) Using SST, compress the valve spring and place the 2 keepers around the valve stem.
SST 09202–70020 (09202–00010)

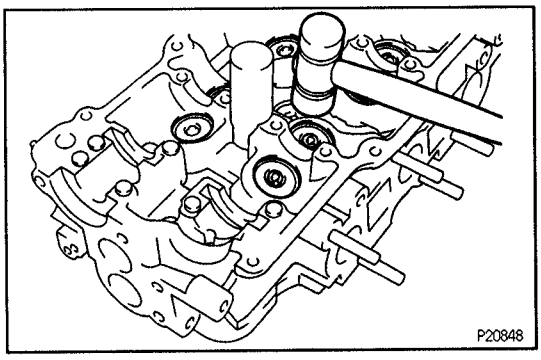

(d) Using a plastic–faced hammer, lightly tap the valve stem tip to ensure a proper fit.

3. INSTALL VALVE LIFTERS AND SHIMS

(a) Install the valve lifter and shim.
(b) Check that the valve lifter rotates smoothly by hand.

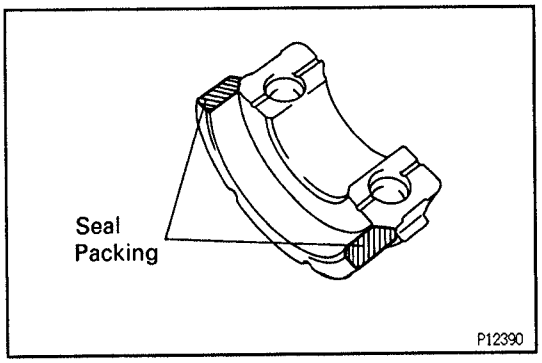

4. INSTALL CAMSHAFT HOUSING PLUGS

(a) Remove any old packing (FIPG) material.
(b) Apply seal packing to the bearing cap as shown.
Seal packing:
Part No. 08826–00080 or equivalent

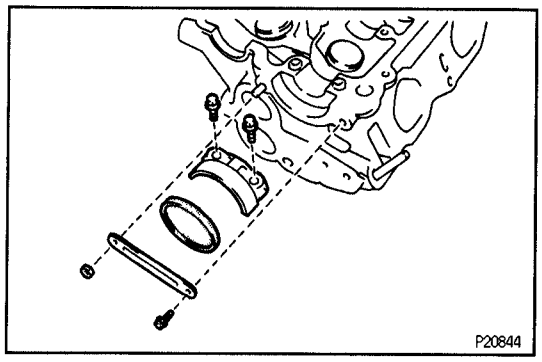

(c) Place a new housing plug in position on the cylinder head, facing the cup side inward.

(d) Install the camshaft bearing cap with the 2 bolts.
Torque: 16 N·m (160 kgf·cm, 12 ft·lbf)

(e) Install the cylinder head rear plate, ground strap with the bolt and nut.
Torque: 8 N·m (80 kgf·cm, 71 in.·lbf)

EG

CYLINDER HEADS INSTALLATION

EG5YF–01

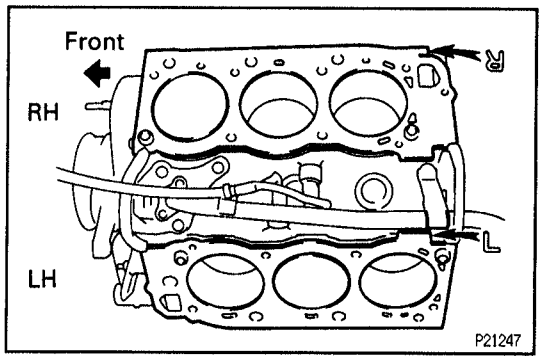

1. INSTALL CYLINDER HEADS

A. Place cylinder head on cylinder block

(a) Place 2 new cylinder head gaskets in position on the cylinder block.
NOTICE: Be careful of the installation direction.

(b) Place the 2 cylinder heads in position on the cylinder head gaskets.

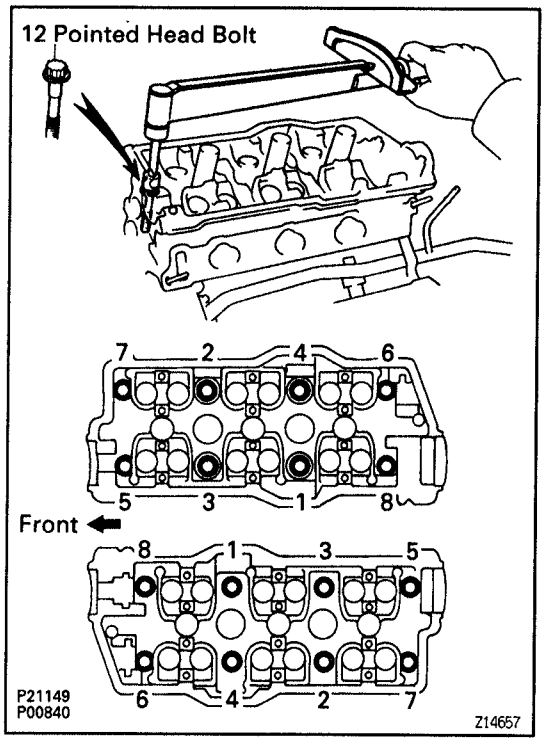

B. Install 12 pointed head cylinder head bolts
HINT:
- The cylinder head bolts are tightened in 3 progressive steps (steps (b), (d) and (e)).
- If any bolt is broken or deformed, replace it.

(a) Apply a light coat of engine oil on the threads and under the heads of the cylinder head bolts.

(b) Install and uniformly tighten the cylinder head bolts on each cylinder head, in several passes, in the sequence shown, then repeat for the other side, as shown.
Torque: 34 N·m (350 kgf·cm, 25 ft·lbf)
If any of the cylinder head bolts does not meet the torque specification, replace the cylinder head bolt.

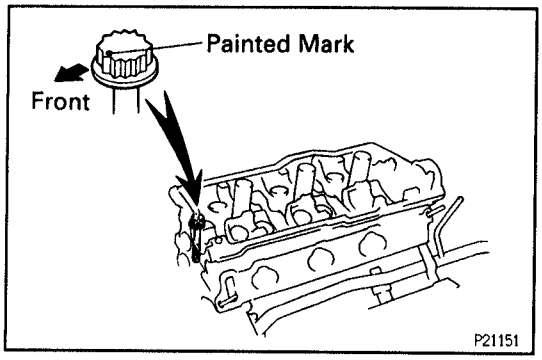

(c) Mark the front of the cylinder head bolt head with paint.

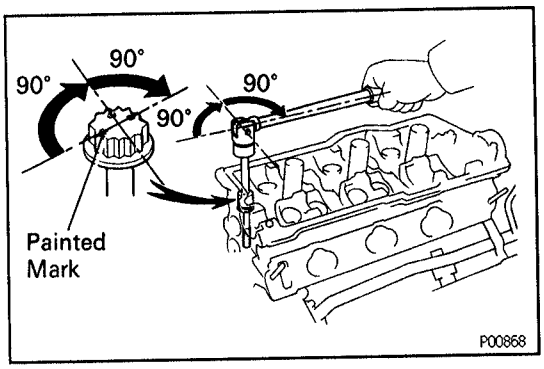

(d) Retighten the cylinder head bolts by 90° in the numerical order shown.
(e) Retighten the cylinder head bolts by an additional 90°.
(f) Check that the painted mark is now facing rearword.

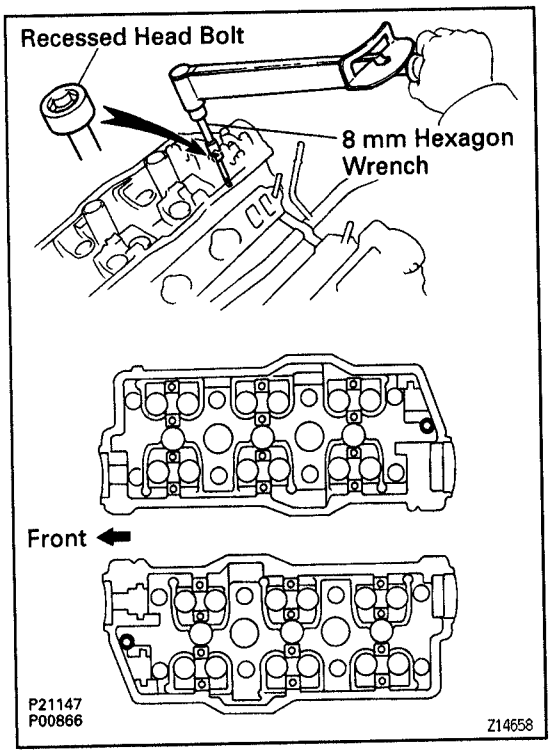

C. Install recessed head cylinder head bolts

(a) Apply a light coat of engine oil on the threads and under the heads of the cylinder head bolts.
(b) Using an 8 mm hexagon wrench, install the cylinder head bolt on each cylinder head, then repeat for the other side, as shown.
Torque: 18 N·m (185 kgf·cm, 13 ft·lbf)

D. Connect ground strap

Install the bolt and connect the ground strap.

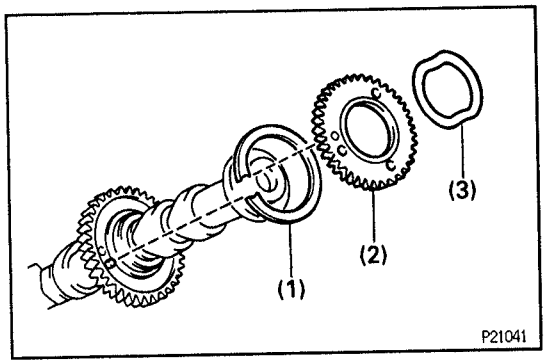

2. ASSEMBLE EXHAUST CAMSHAFTS

(a) Mount the hexagonal wrench head portion of the camshaft in a vise.
NOTICE: Be careful not to damage the camshaft.
(b) Install these parts:
(1) Camshaft gear spring
(2) Camshaft sub–gear
HINT: Attach the pins on the gears to the gear spring ends.
(3) Wave washer
(c) Using snap ring pliers, install the snap ring.
(d) Using SST, align the holes of the camshaft main gear and sub–gear by turning camshaft sub–gear clockwise, and temporarily install a service bolt.
SST 09960–10010 (09962–01000, 09963–00600)
(e) Align the gear teeth of the main gear and sub–gear, and tighten the service bolt.

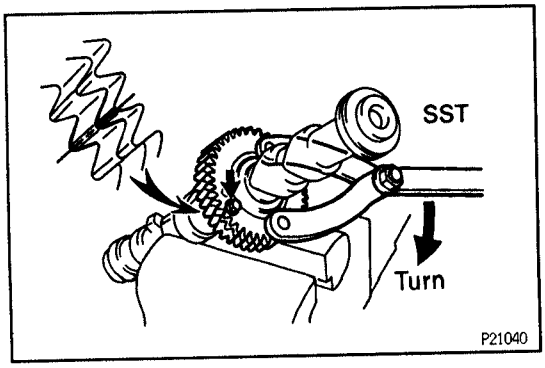

3. INSTALL CAMSHAFTS

NOTICE: Since the thrust clearance of the camshaft is small, the camshaft must be kept level while it is being installed. If the camshaft is not kept level, the portion of the cylinder head receiving the shaft thrust may crack or be damaged, causing the camshaft to seize or break. To avoid this, these steps should be carried out.

EG

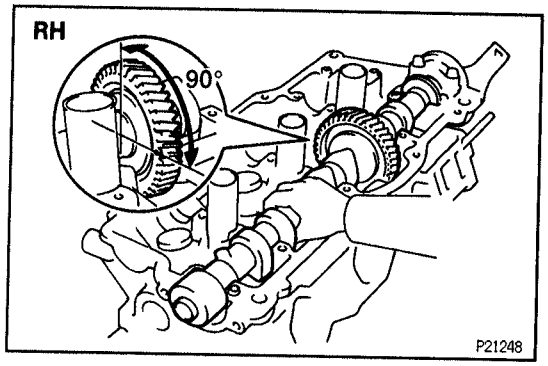

A. Install intake camshaft of RH cylinder head

(a) Apply new engine oil to the thrust portion and journal of the camshaft.

(b) Place the intake camshaft at 90° angle of timing mark (2 dot marks) on the cylinder head.

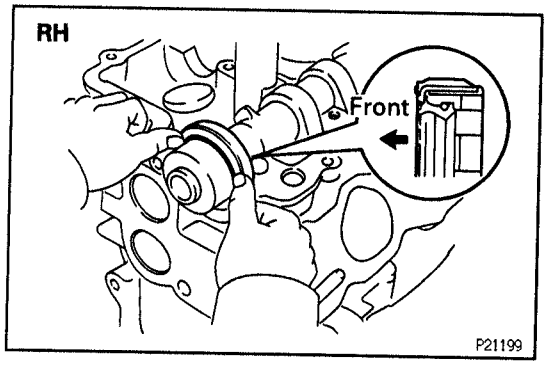

(c) Apply MP grease to a new oil seal lip.

(d) Install the oil seal to the camshaft.

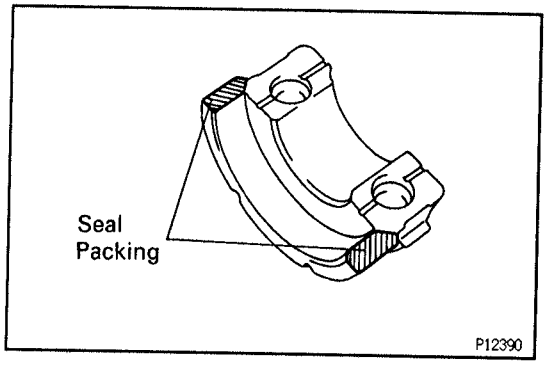

(e) Remove any old packing (FIPG) material.

(f) Apply seal packing to the No.1 bearing cap as shown.

Seal packing:

Part No. 08826–00080 or equivalent

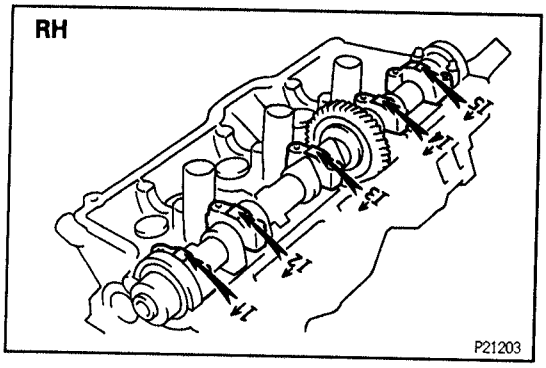

(g) Install the 5 bearing caps in their proper locations.

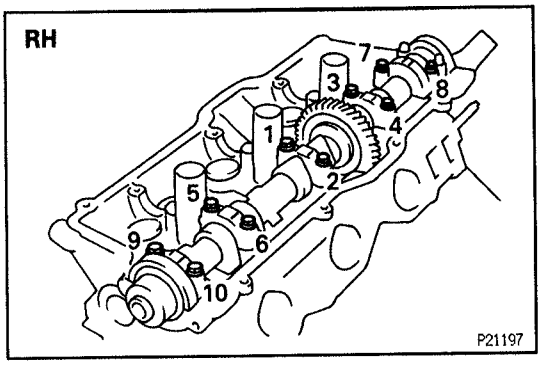

(h) Apply a light coat of engine oil on the threads and under the heads of the bearing cap bolts.

(i) Install and uniformly tighten the 10 bearing cap bolts, in several passes, in the sequence shown.
Torque: 16 N·m (160 kgf·cm, 12 ft·lbf)

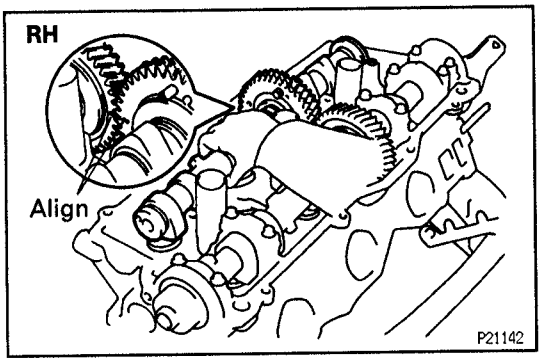

B. Install exhaust camshaft of RH cylinder head

(a) Apply new engine oil to the thrust portion and journal of the camshaft.

(b) Align the timing marks (2 dot marks) of the camshaft drive and driven gears.

(c) Place the exhaust camshaft on the cylinder head.

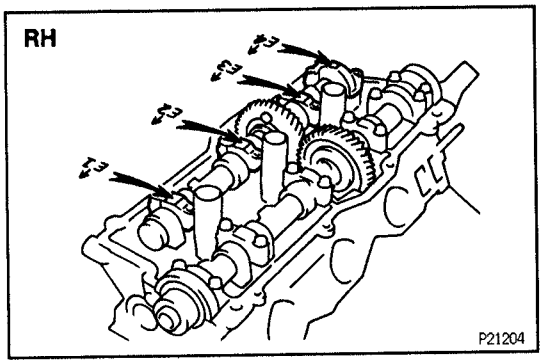

(d) Install the 4 bearing caps in their proper locations.

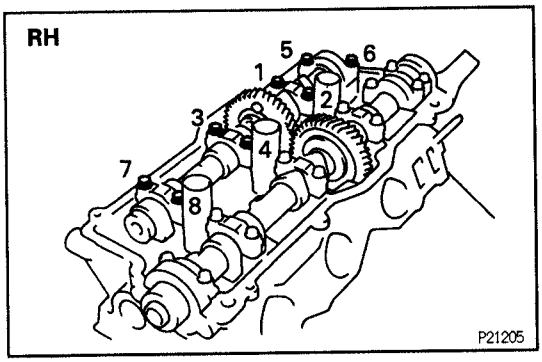

(e) Apply a light coat of engine oil on the threads and under the heads of the bearing cap bolts.

(f) Install and uniformly tighten the 8 bearing cap bolts, in several passes, in the sequence shown.
Torque: 16 N·m (160 kgf·cm, 12 ft·lbf)

(g) Remove the service bolt.

(h) Align the timing marks (1 dot mark) of the camshaft drive and driven gears by turning the camshaft with a wrench.

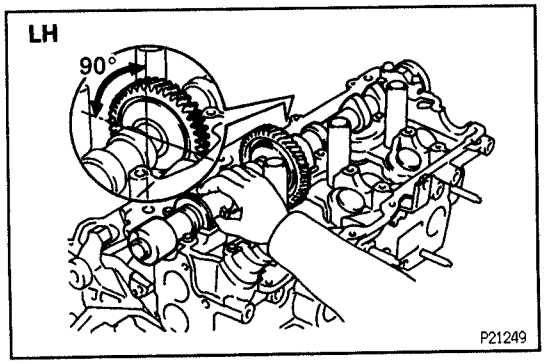

C. Install intake camshaft of LH cylinder head

(a) Apply new engine oil to the thrust portion and journal of the camshaft.

(b) Place the intake camshaft at 90° angle of timing mark (1 dot mark) on the cylinder head.

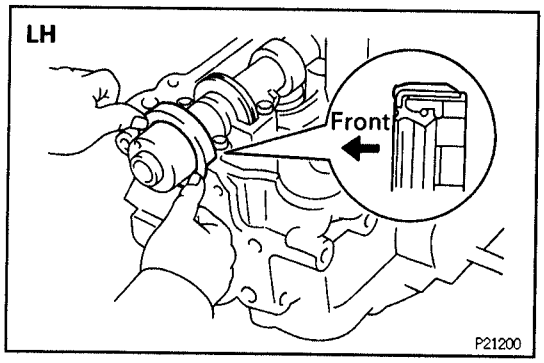

(c) Apply MP grease to a new oil seal lip.
(d) Install the oil seal to the camshaft.

EG

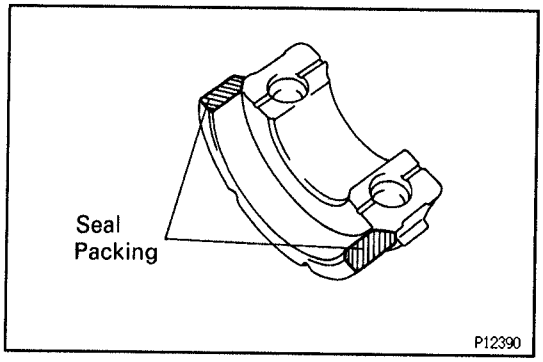

(e) Remove any old packing (FIPG) material.
(f) Apply seal packing to the No.1 bearing cap as shown.
Seal packing:
Part No. 08826–00080 or equivalent

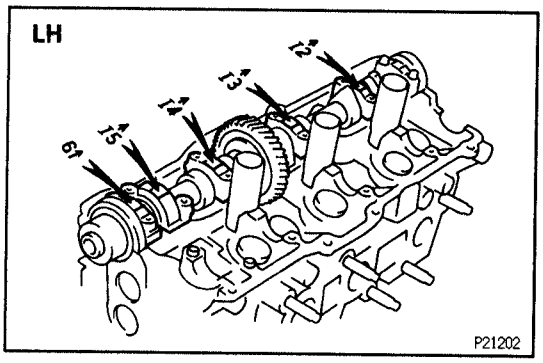

(g) Install the 5 bearing caps in their proper locations.

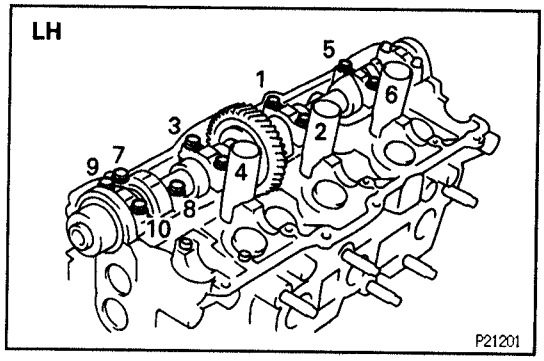

(h) Apply a light coat of engine oil on the threads and under the heads of the bearing cap bolts.
(i) Install and uniformly tighten the 10 bearing cap bolts, in several passes, in the sequence shown.
Torque: 16 N·m (160 kgf·cm, 12 ft·lbf)

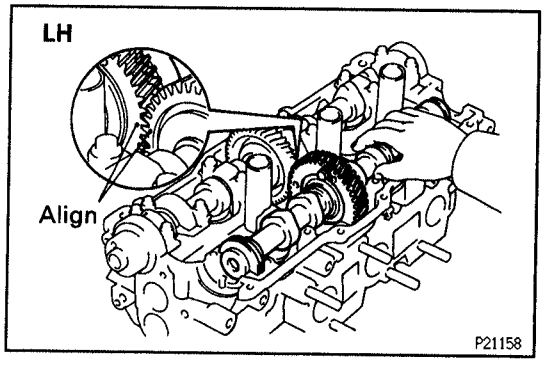

D. Install exhaust camshaft of LH cylinder head
(a) Apply new engine oil to the thrust portion and journal of the camshaft.
(b) Align the timing marks (1 dot mark) of the camshaft drive and driven gears.
(c) Place the exhaust camshaft on the cylinder head.

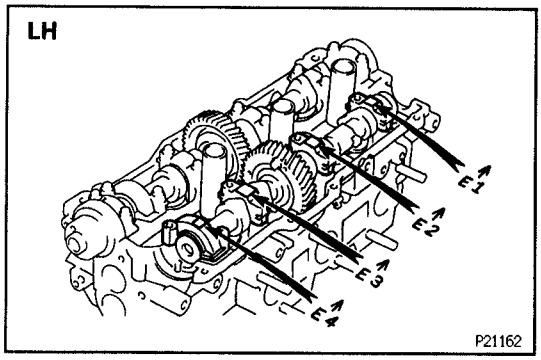

(d) Install the 4 bearing caps in their proper locations.

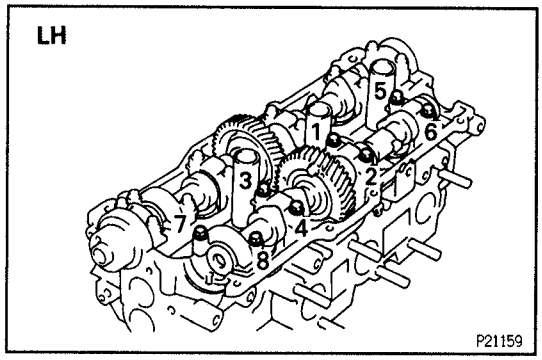

(e) Apply a light coat of engine oil on the threads and under the heads of bearing cap bolts.

(f) Install and uniformly tighten the 8 bearing cap bolts, in several passes, in the sequence shown.
Torque: 16 N·m (160 kgf·cm, 12 ft·lbf)

(g) Remove the service bolt.

4. CHECK AND ADJUST VALVE CLEARANCE
(See steps 5 and 6 in valve clearance inspection and adjustment)
Turn the camshaft and position the cam lobe upward, and check and adjust the valve clearance.

5. INSTALL SEMI-CIRCULAR PLUGS

(a) Remove any old packing (FIPG) material.

(b) Apply seal packing to the semi-circular plug grooves.
Seal packing:
Part No. 08826-00080 or equivalent

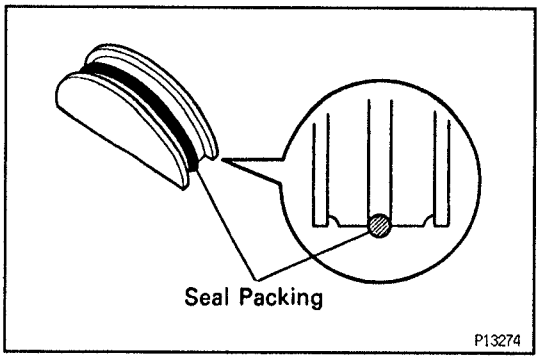

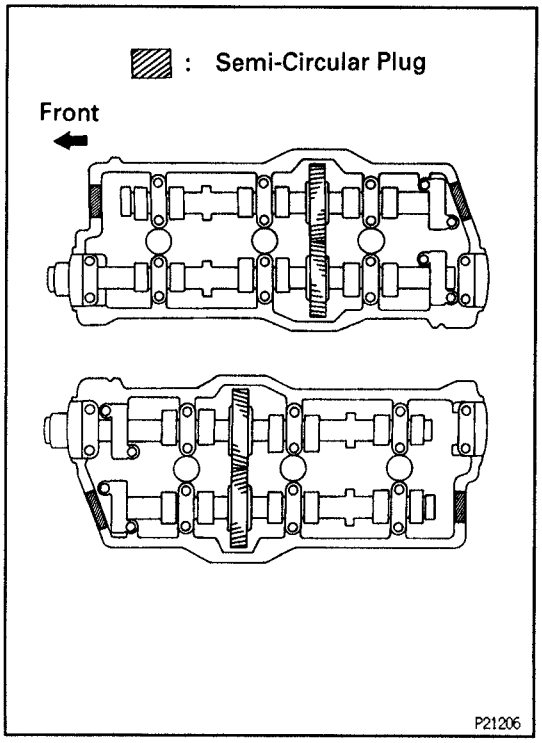

(c) Install the 4 semi – circular plugs to the cylinder heads.

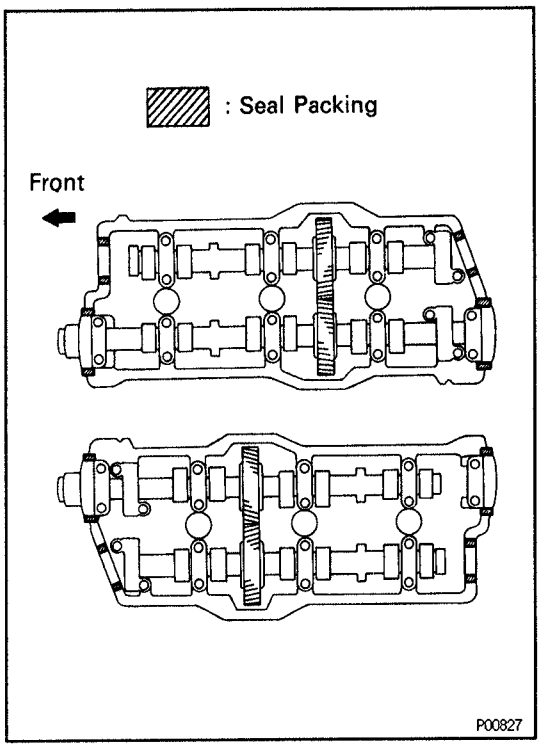

6. INSTALL CYLINDER HEAD COVERS

(a) Apply seal packing to the cylinder heads as shown in the illustration.
Seal packing:
Part No. 08826–00080 or equivalent

(b) Install the gasket to the cylinder head cover.

(c) Install the cylinder head cover with the 8 bolts. Uniformly tighten the bolts in several passes. Install the 2 cylinder head covers.
Torque: 6 N·m (60 kgf·cm, 53 in.·lbf)

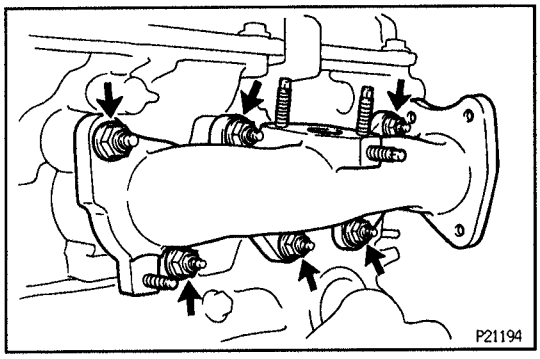

7. INSTALL EXHAUST MANIFOLDS

(a) Install 2 new gaskets and the exhaust manifolds with the 12 nuts.
Torque: 40 N·m (400 kgf·cm, 30 ft·lbf)

(b) Install the exhaust manifold heat insulators with the 6 nuts.
Torque: 8 N·m (80 kgf·cm, 71 in.·lbf)

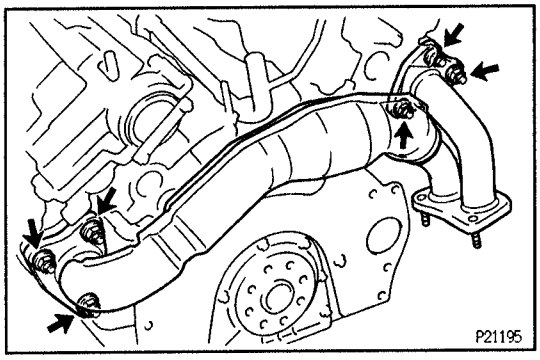

8. INSTALL EXHAUST CROSSOVER PIPE
Install 2 new gaskets and the crossover pipe with the 6 nuts.
Torque: 45 N·m (450 kgf·cm, 33 ft·lbf)

9. INSTALL GENERATOR BRACKET
Torque: 18.5 N·m (185 kgf·cm, 14 ft·lbf)

10. INSTALL PS PUMP BRACKET
Torque: 18.5 N·m (185 kgf·cm, 14 ft·lbf)

11. INSTALL INTAKE MANIFOLD ASSEMBLY

(a) Install 2 new gaskets and the intake manifold, delivery pipe and injectors assembly with the 8 bolts, 4 plate washers and 4 nuts.
Torque: 18 N·m (180 kgf·cm, 13 ft·lbf)

(b) Install the intake manifold stay with the 2 bolts.
Torque: 18 N·m (180 kgf·cm, 13 ft·lbf)

(c) Connect the fuel inlet hose.

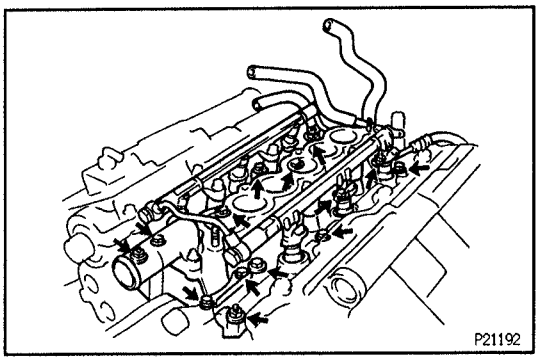

12. INSTALL FUEL PRESSURE REGULATOR
(See step 1 in fuel pressure regulator installation in SFI System)

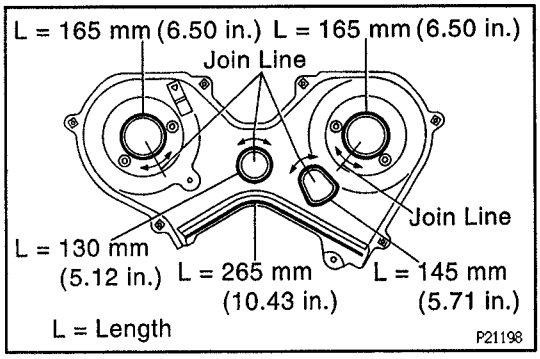

13. INSTALL NO.3 TIMING BELT COVER

(a) Check that the timing belt cover gaskets have no cracks or peeling, etc.

If the gaskets have cracks or peeling etc., replace them using these steps:

- Using a screwdriver and gasket scraper, remove all the old gasket material.
- Thoroughly clean all components to remove all the loose material.
- Remove the backing paper from a new gasket and install the gasket evenly to the part of the timing belt cover shaded black in the illustration.

(b) Install the timing belt cover with the 6 bolts.

Torque: 9 N·m (90 kgf·cm, 80 in.·lbf)

14. INSTALL CAMSHAFT POSITION SENSOR

Torque: 8 N·m (80 kgf·cm, 71 in.·lbf)

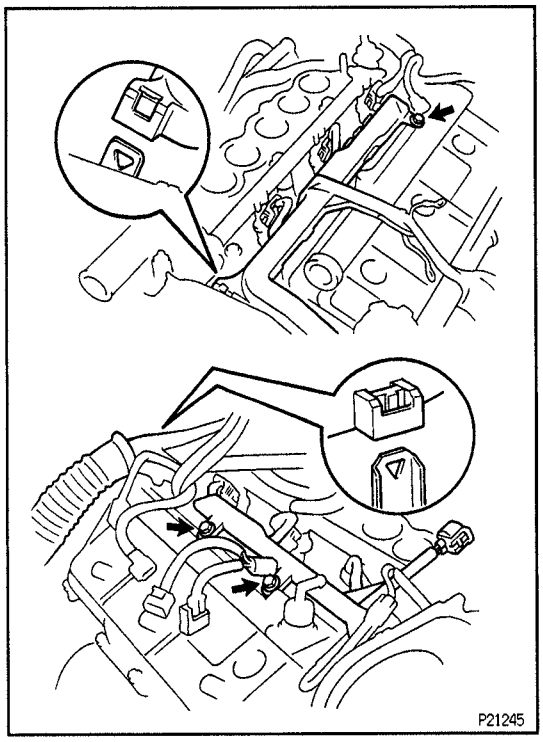

15. CONNECT ENGINE WIRE

(a) Install the engine wire with the 3 bolts.

(b) Connect the 3 engine wire clamps.

(c) Connect these connectors:

- Oil pressure sensor connector
- Crankshaft position sensor connector
- 6 injector connectors
- ECT sender gauge connector
- ECT sensor connector
- Knock sensor connector
- Camshaft position sensor connector

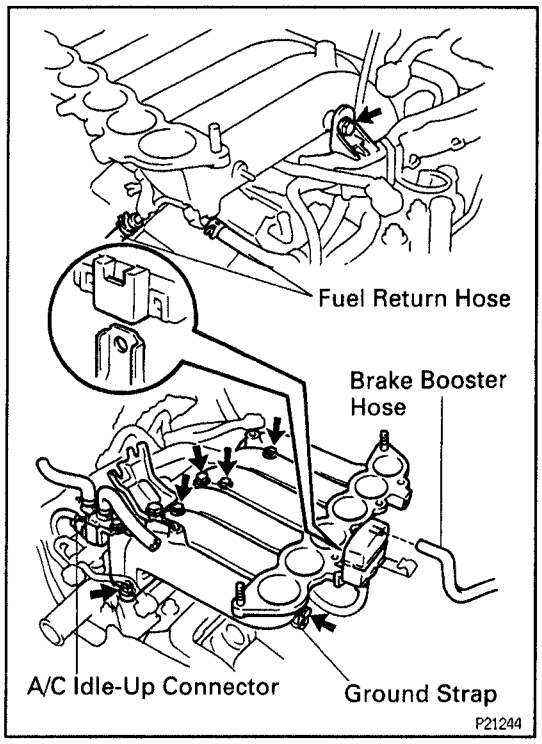

16. INSTALL INTAKE AIR CONNECTOR

(a) Install a new gasket and the intake air connector with the 3 bolts and 2 nuts.
Torque: 18 N·m (180 kgf·cm, 13 ft·lbf)

(b) Connect the DLC1 to the bracket.

(c) Install the bolt, and connect the ground strap to the intake air connector.

(d) Connect the brake booster vacuum hose to the intake air connector.

(e) Connect the 2 fuel return hoses.

(f) Install the engine wire with the bolt.

(g) w A/C:
Connect the A/C idle-up valve connector.

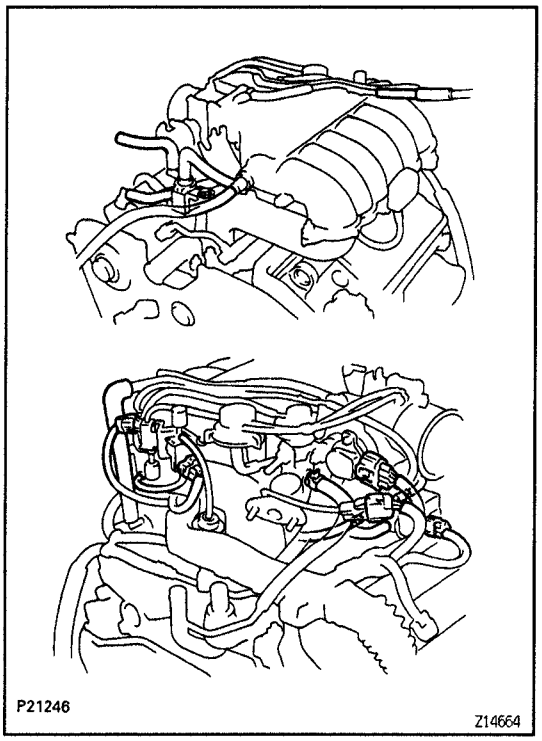

17. INSTALL AIR INTAKE CHAMBER ASSEMBLY

(a) Install a new gasket and the air intake chamber assembly with the 4 bolts and 2 nuts.
Torque: 18 N·m (180 kgf·cm, 13 ft·lbf)

(b) Connect these hoses:
- 2 PCV hoses
- 2 water bypass hoses
- Air assist hose to throttle body
- 2 vacuum sensing hoses to VSV
- EVAP hose
- Air hose to PS pump

w/ A/C:
- Air hose to A/C idle-up valve

(c) Connect these connectors:
- VSV connector for fuel pressure control
- Throttle position sensor connector
- IAC valve connector

w/ EGR:
- EGR gas temperature sensor connector
- VSV connector for EGR

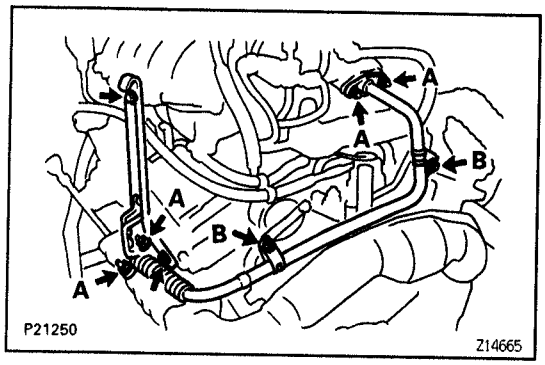

18. INSTALL AIR INTAKE CHAMBER STAY

(a) Install the air intake chamber stay with the 2 bolts.
Torque: 40 N·m (400 kgf·cm, 30 ft·lbf)
A/T:

(b) Install a new O–ring to the oil filler tube.

(c) Apply soapy water to the O–ring.

(d) Push in the oil filler tube end into the tube hole of the oil pan.

(e) Install the oil filler tube and No.1 throttle cable clamp with the 2 nuts and bolt.

19. w/ EGR:
INSTALL EGR PIPE
Install 2 new gaskets and the EGR pipe with the 2 nuts and 4 nuts.
Torque:
Nut A: 18.5 N·m (185 kgf·cm, 14 ft·lbf)
Nut B: 8 N·m (80 kgf·cm, 71 in.·lbf)

20. INSTALL GENERATOR
(See generator installation in Charging System)

21. INSTALL TIMING BELT IDLER NO.2, CAMSHAFT TIMING PULLEYS AND TIMING BELT
(See steps 2 and 7 to 24 in timing belt installation)

22. INSTALL SPARK PLUGS AND HIGH – TENSION CORDS WITH IGNITION COILS
(See high – tension cords inspection and ignition coils installation in Ignition System)

23. CONNECT HEATER HOSE

24. CONNECT THESE CABLES:

(a) A/T:
Throttle cable

(b) Accelerator cable

(c) w/ Cruise control:
Cruise control actuator cable

25. INSTALL MAF METER, RESONATOR AND AIR CLEANER CAP

26. INSTALL FRONT EXHAUST PIPE
(See step 6 in engine with transmission installation in cylinder block)

27. FILL WITH ENGINE COOLANT

28. START ENGINE AND CHECK FOR LEAKS

29. CHECK IGNITION TIMING
(See ignition timing inspection)

30. INSTALL ENGINE UNDER COVER

31. ROAD TEST VEHICLE
Check for abnormal noise, shock, slippage, correct shift points and smooth operation.

32. RECHECK ENGINE COOLANT LEVEL

CYLINDER BLOCK

EG5YG-01

COMPONENTS FOR ENGINE REMOVAL AND INSTALLATION (2WD)

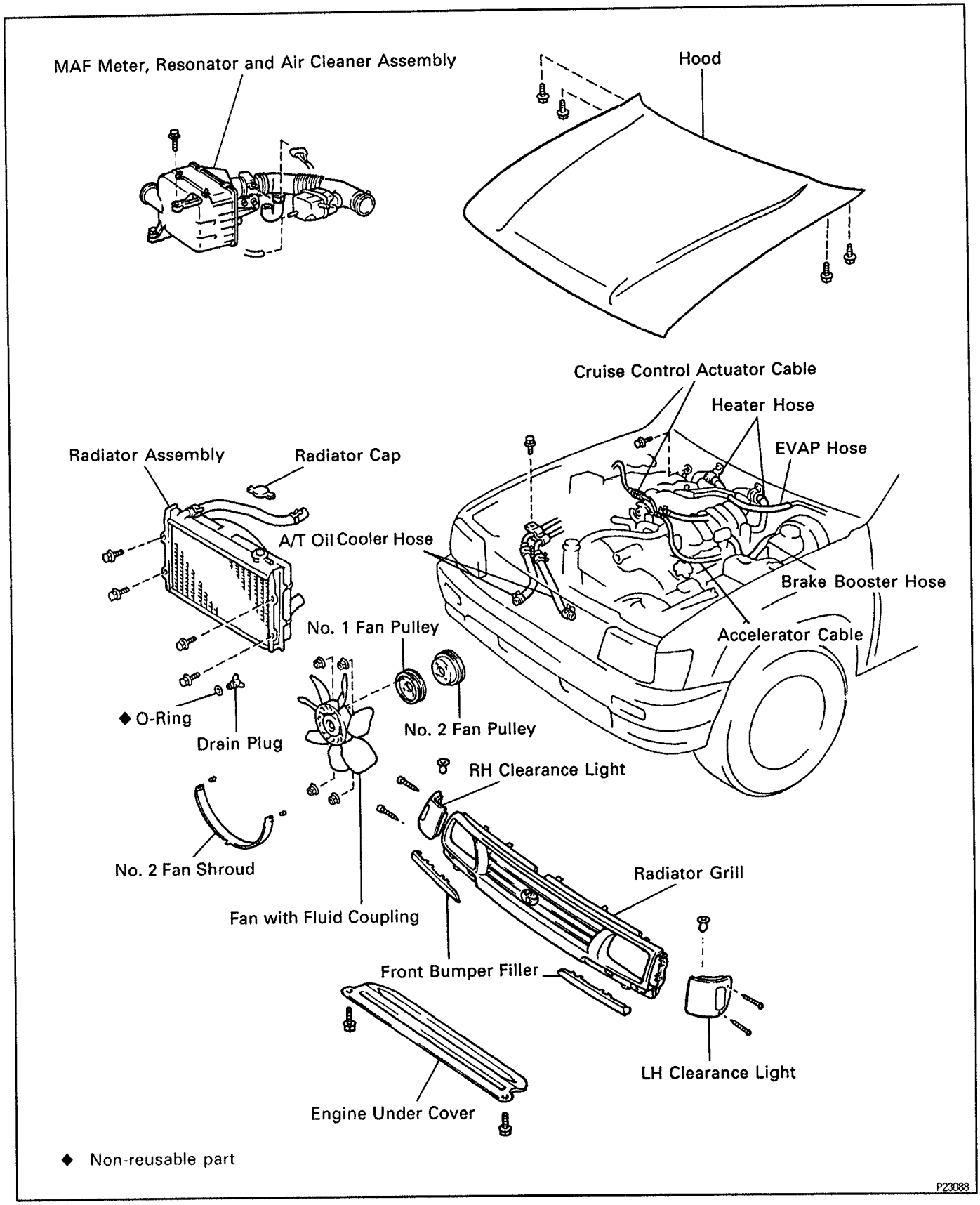

◆ Non-reusable part

P23088

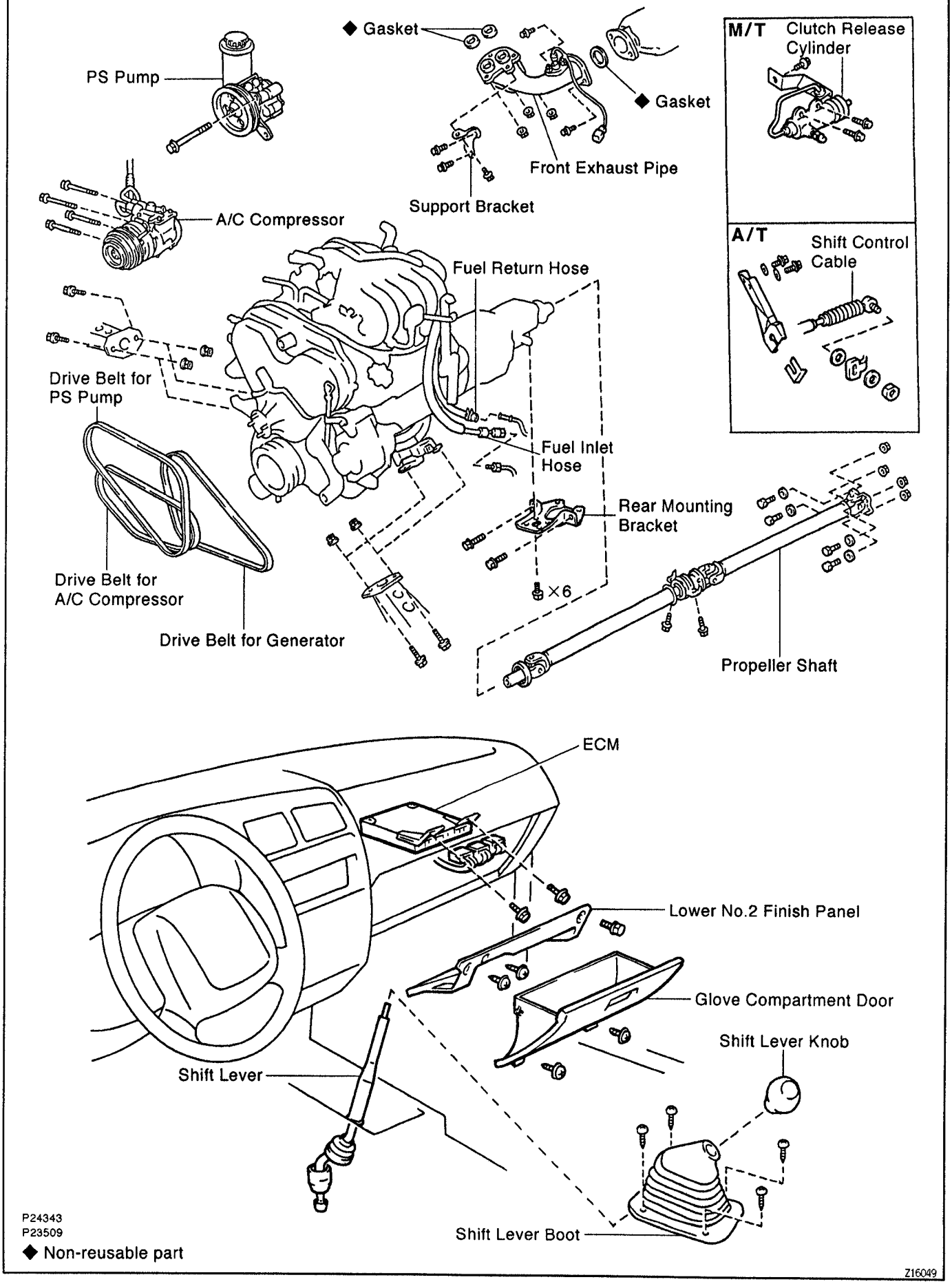
◆ Gasket
PS Pump
◆ Gasket
M/T
Clutch Release Cylinder
Front Exhaust Pipe
Support Bracket
A/C Compressor
A/T
Shift Control Cable
Fuel Return Hose
Drive Belt for PS Pump
Fuel Inlet Hose
Rear Mounting Bracket
×6
Drive Belt for A/C Compressor
Drive Belt for Generator
Propeller Shaft
ECM
Lower No.2 Finish Panel
Glove Compartment Door
Shift Lever Knob
Shift Lever
Shift Lever Boot
P24343
P23509
◆ Non-reusable part
Z16049

ENGINE WITH TRANSMISSION REMOVAL (2WD)

EG5YH–01

1. **REMOVE ENGINE UNDER COVER**
2. **DRAIN ENGINE COOLANT AND OIL**
3. **DRAIN TRANSMISSION OIL**
4. **REMOVE HOOD**
5. **REMOVE RADIATOR ASSEMBLY**
   (See steps 2 to 9 in radiator removal in Cooling System)
6. **DISCONNECT HEATER HOSES**
   (See steps 4, 5 and 8 in cylinder heads removal)
7. **REMOVE FAN WITH FLUID COUPLING AND FAN PULLEYS**
   (See steps 4 to 11 in timing belt removal)
8. **REMOVE AIR CLEANER CASE AND FILTER**
9. **DISCONNECT HOSES**
   Disconnect these hoses:
   - Brake booster vacuum hose
   - EVAP hose
   - Fuel return hose
   - Fuel inlet hose

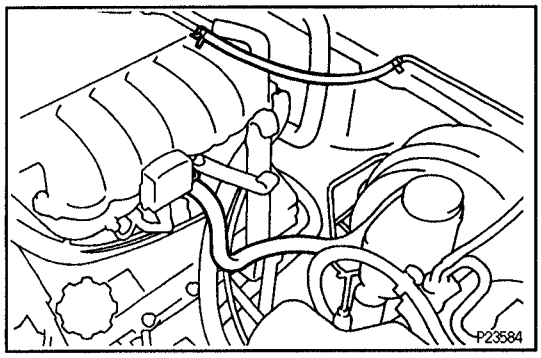

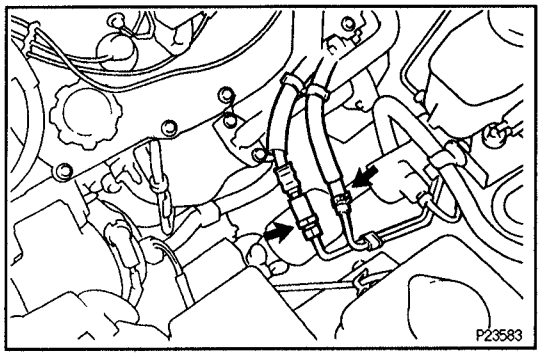

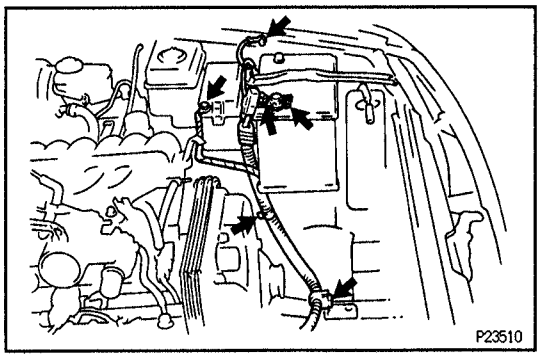

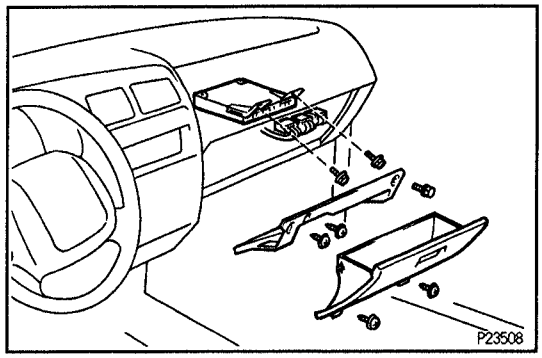

10. **DISCONNECT STARTER WIRE AND CONNECTOR**
(a) Remove the bolt, and disconnect the ground strap.
(b) Remove the 2 nuts, disconnect the positive (+) terminal cable from battery.
(c) Disconnect the 2 starter wire clamps and connector.
(d) Remove the nut, and disconnect wire from Relay Block No.2.
11. **DISCONNECT GENERATOR WIRE**
(See step 1 in generator removal in Chraging System)
12. **REMOVE GLOVE COMPARTMENT DOOR AND LOWER NO.2 FINISH PANEL**
13. **DISCONNECT ENGINE WIRE AND CONNECTORS**
(a) Remove the 2 bolts and ECM.
(b) M/T:
Disconnect the 3 ECM connectors.
(c) A/T:
Disconnect the 4 ECM connectors.

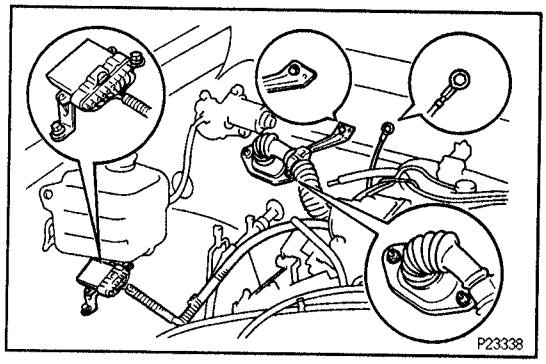

(d) Disconnect the following wires and connectors:
- Igniter connector
- Ground strap

(e) Remove the bolt and 2 nuts.
(f) Pull out the engine wire from the cabin.

14. M/T:
REMOVE SHIFT LEVER ASSEMBLY

(a) Remove the shift lever knob.
(b) Remove the 4 screws and shift lever boot.
(c) Remove the 6 bolts, shift lever assembly and gasket.

15. REMOVE PROPELLER SHAFT
(See propeller shaft removal in Propeller Shaft)

16. DISCONNECT SPEEDOMETER CABLE
NOTICE: Do not lose the felt protector and washers.

17. REMOVE FRONT EXHAUST PIPE

(a) Disconnect the 2 heated oxygen sensor connectors.
(b) Remove the 2 bolts and retainer, holding the front exhaust pipe to the center exhaust pipe.

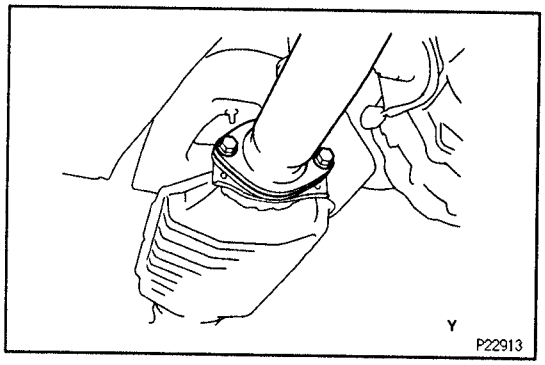

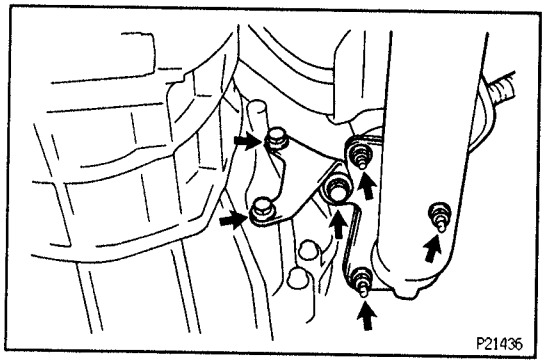

(c) Remove the 3 bolts and support bracket.
(d) Remove the 3 nuts, front exhaust pipe and 3 gaskets.

18. M/T:
REMOVE CLUTCH RELEASE CYLINDER

Remove the 2 bolts, and disconnect the clutch clutch release cylinder.

19. A/T:
REMOVE CONTROL CABLE

(a) Remove the nut and the cable.
(b) Remove the 2 bolts and the cable bracket.

20. PLACE JACK UNDER TRANSMISSION

21. REMOVE ENGINE REAR MOUNTING BRACKET

Remove the 8 bolts holding the mounting bracket to the mounting insulator and cross member.

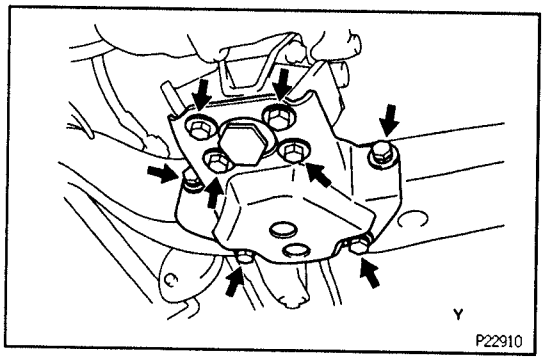

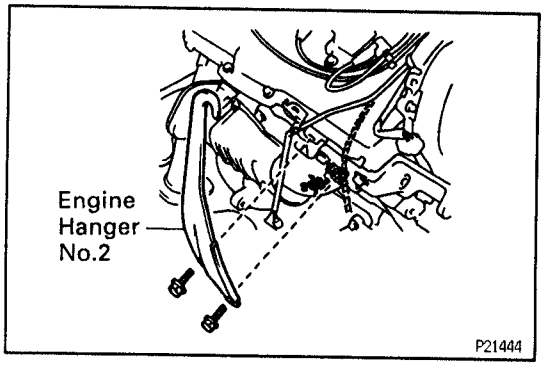

22. REMOVE ENGINE WITH TRANSMISSION

(a) w/ A/C:
Remove the bolt and disconnect the A/C compressor wire clamp.

(b) Install a engine hanger No.2 in the correct direction.
Part No.:
Engine hanger No.2 12282–62030
Bolt 91512–61020
Torque: 40 N·m (400 kgf·cm, 30 ft·lbf)

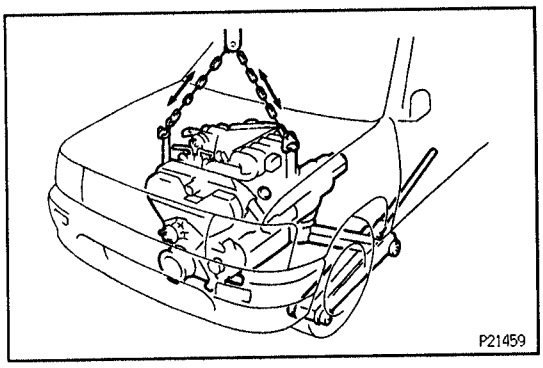

(c) Attach the engine hoist chain to the 2 engine hangers.

EG

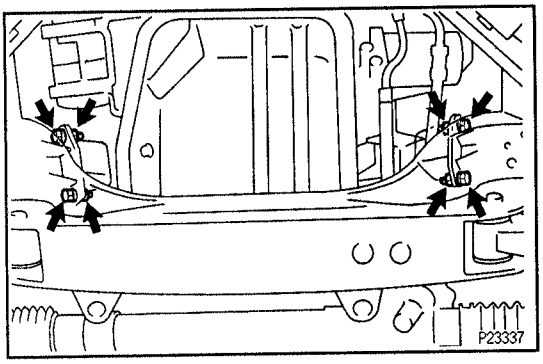

(d) Remove the 4 bolts and nuts holding the engine front mounting insulators to the frame.

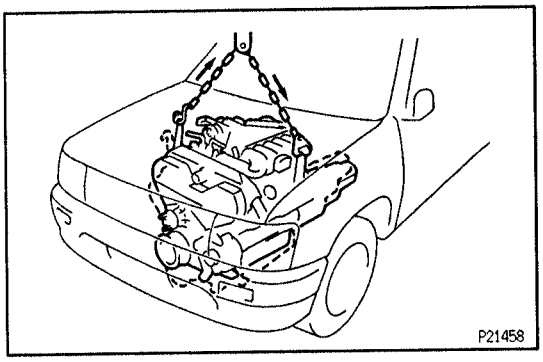

(e) Lift the engine with transmission out of the vehicle slowly and carefully.
NOTICE: Make sure the engine is clear of all wiring and hoses.

(f) Place the engine and transmission assembly onto the stand.

EG5YJ-01

TRANSMISSION REMOVAL (4WD)

(See MT and AT section)

COMPONENTS FOR ENGINE REMOVAL AND INSTALLATION (4WD)

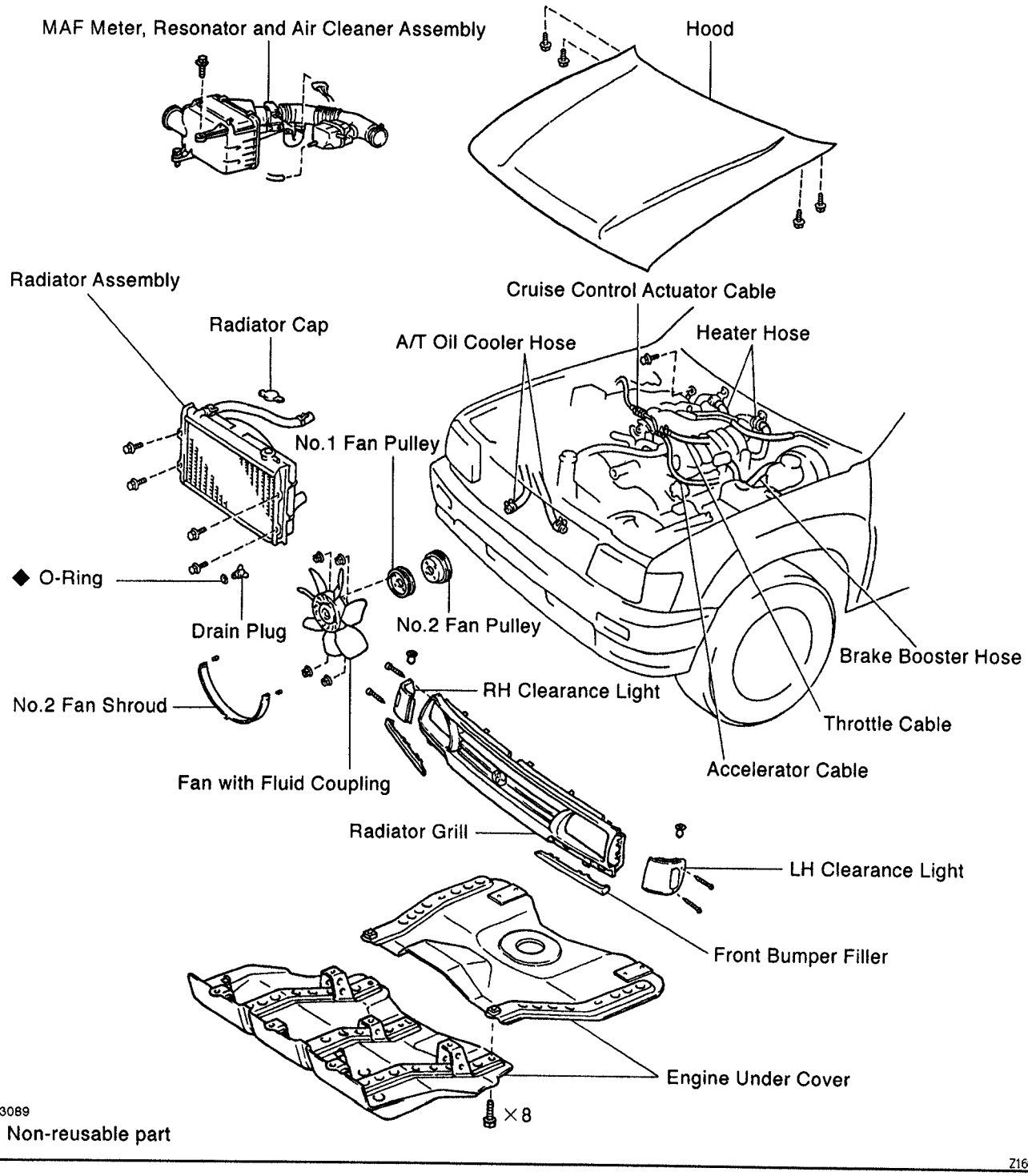

EG

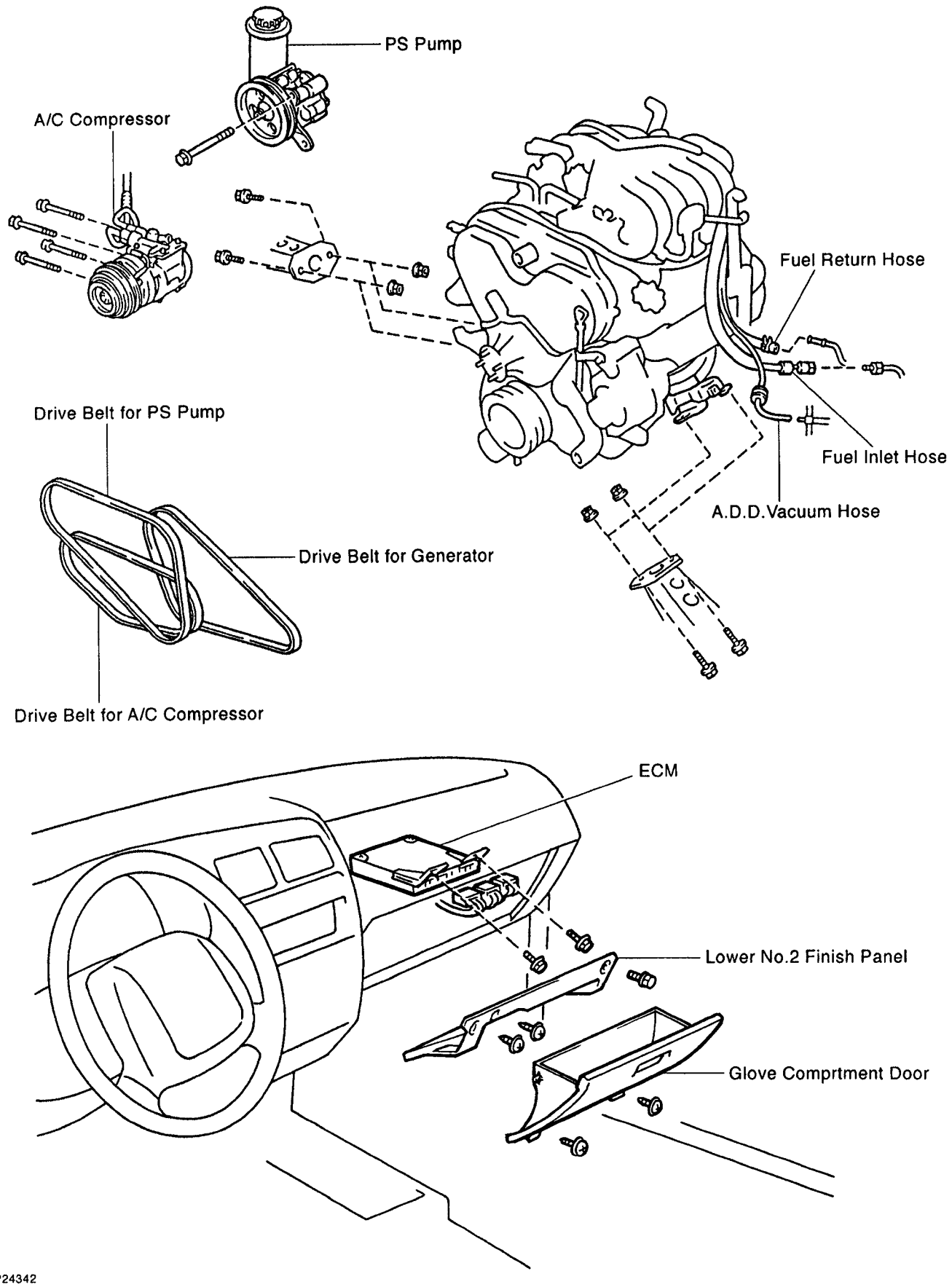

P24342
P23507

Z16050

EG5BL-04

ENGINE REMOVAL (4WD)

1. **REMOVE ENGINE UNDER COVER**
2. **DRAIN ENGINE COOLANT AND OIL**
3. **REMOVE HOOD**
4. **REMOVE RADIATOR ASSEMBLY**
   (See steps 2 to 9 in radiator removal in Cooling System)
5. **DISCONNECT HEATER HOSES**
   (See steps 4, 5 and 8 in cylinder heads removal)
6. **REMOVE FAN WITH FLUID COUPLING AND FAN PULLEYS**
   (See steps 4 to 11 in timing belt removal)
7. **REMOVE AIR CLEANER CASE AND FILTER**
8. **DISCONNECT HOSES**
   Disconnect these hoses:
   - Brake booster vacuum hose
   - EVAP hose
   - A.D.D. Vacuum hose
   - Fuel return hose
   - Fuel inlet hose

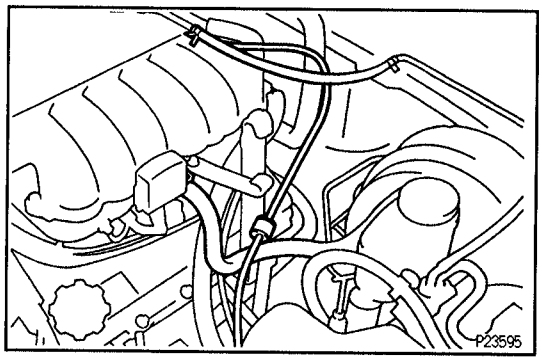

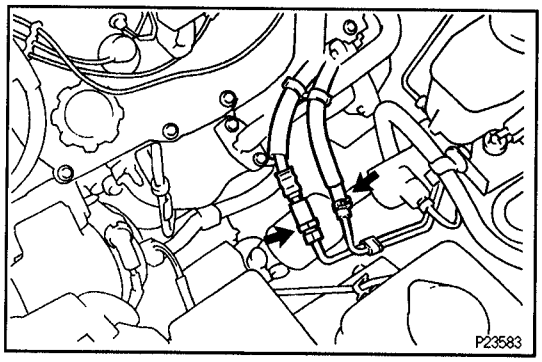

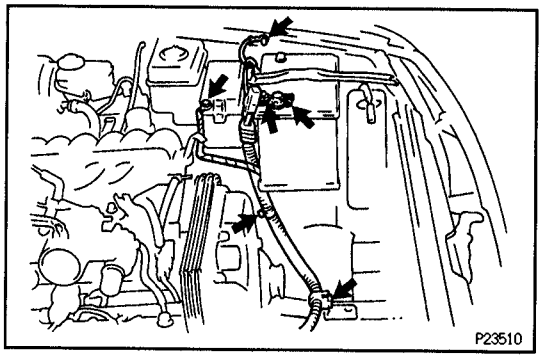

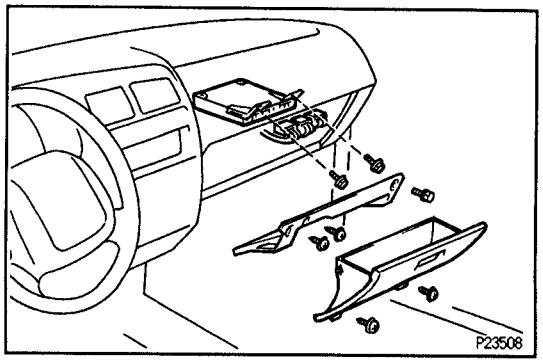

9. **DISCONNECT STARTER WIRE AND CONNECTORS**
   (a) Remove the bolt, and disconnect the ground strap.
   (b) Remove the 2 nut, and disconnect the positive (+) terminal cable from battery.
   (c) Disconnect the 2 starter wire clamps and connector.
   (d) Remove the nut, and disconnect wire from Relay Block No.2.
10. **DISCONNECT GENERATOR WIRE**
    (See step 1 in generator removal in Charging System)
11. **REMOVE GLOVE COMPARTMENT DOOR AND LOWER NO.2 FINISH PANEL**
12. **DISCONNECT ENGINE WIRE AND CONNECTORS**
    (a) Remove the 2 bolts and ECM.
    (b) M/T:
    Disconnect the 3 ECM connectors.
    (c) A/T:
    Disconnect the 4 ECM connectors.

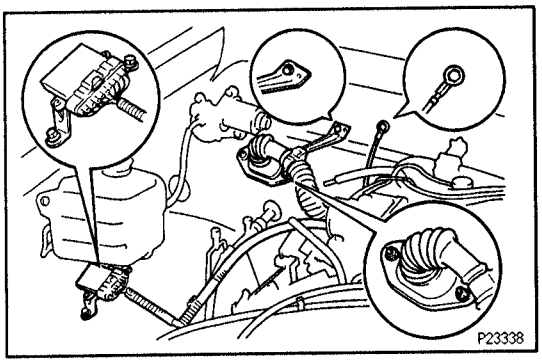

(d) Disconnect these wires and connectors:
- Igniter connector
- Ground strap

(e) Remove the bolt and 2 nuts.

(f) Pull out the engine wire from the cabin.

EG

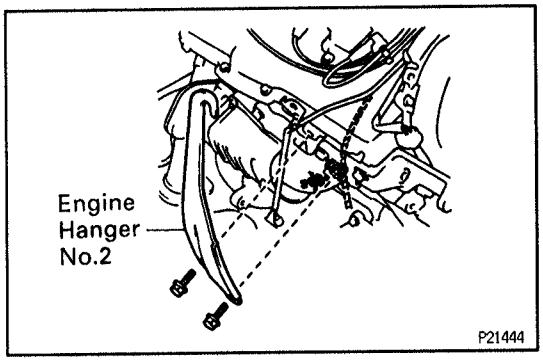

13. REMOVE ENGINE

(a) w/ A/C:
Remove the bolt and disconnect the A/C compressor wire clamp.

(b) Install a engine hanger No.2 in the correct direction.
Part No.:
Engine hanger No.2 12282-62030
Bolt 91512-61020
Torque: 40 N·m (400 kgf·cm, 30 ft·lbf)

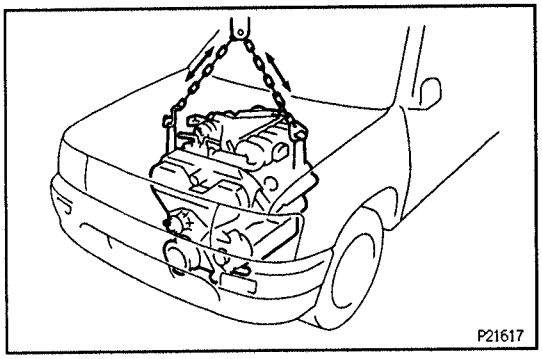

(c) Attach the engine hoist chain to the 2 engine hangers.

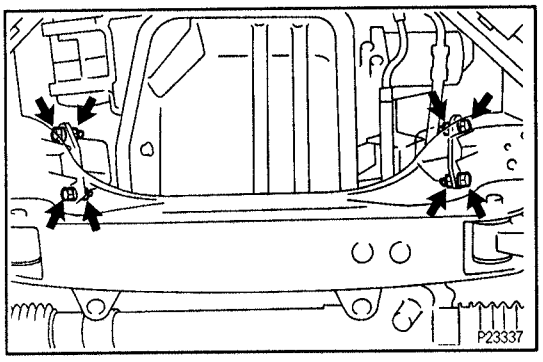

(d) Remove the 4 bolts and nuts holding the engine front mounting insulators to the frame.

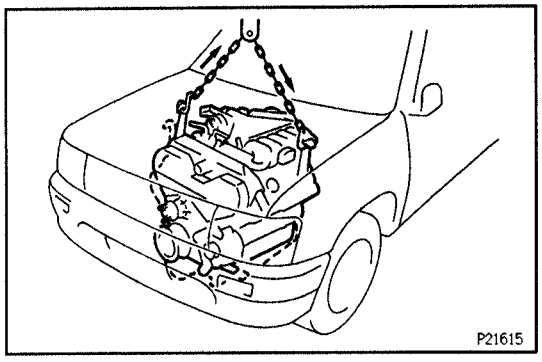

(e) Lift the engine out of the vehicle slowly and carefully.
NOTICE: Make sure the engine is clear of all wiring and hoses.

(f) Place the engine assembly onto the stand.

EG1EG–0C

COMPONENTS FOR ENGINE AND TRANSMISSION SEPARATION (2WD)

M/T

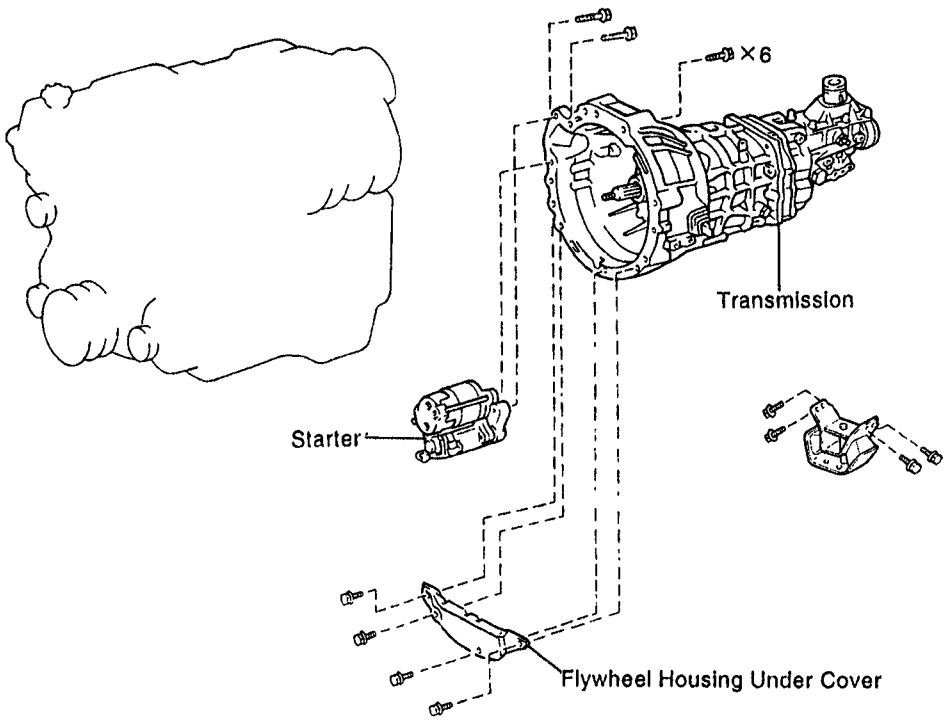

A/T

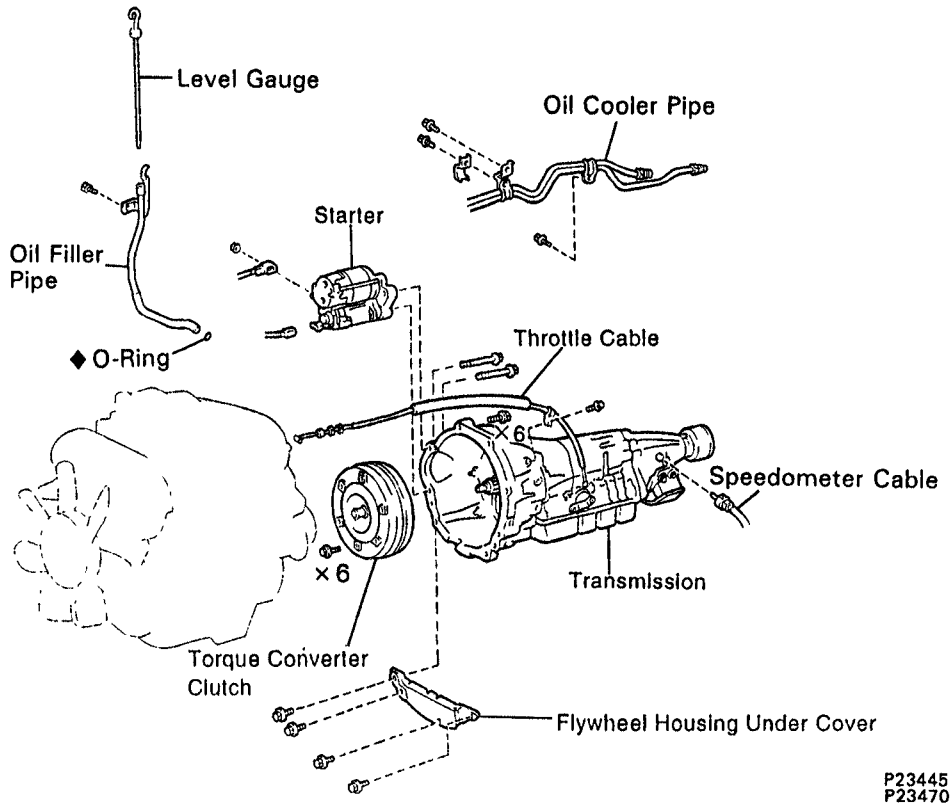

P23445
P23470

◆ Non-reusable part

Z15510

EG5BM-02

COMPONENTS FOR DISASSEMBLY AND ASSEMBLY

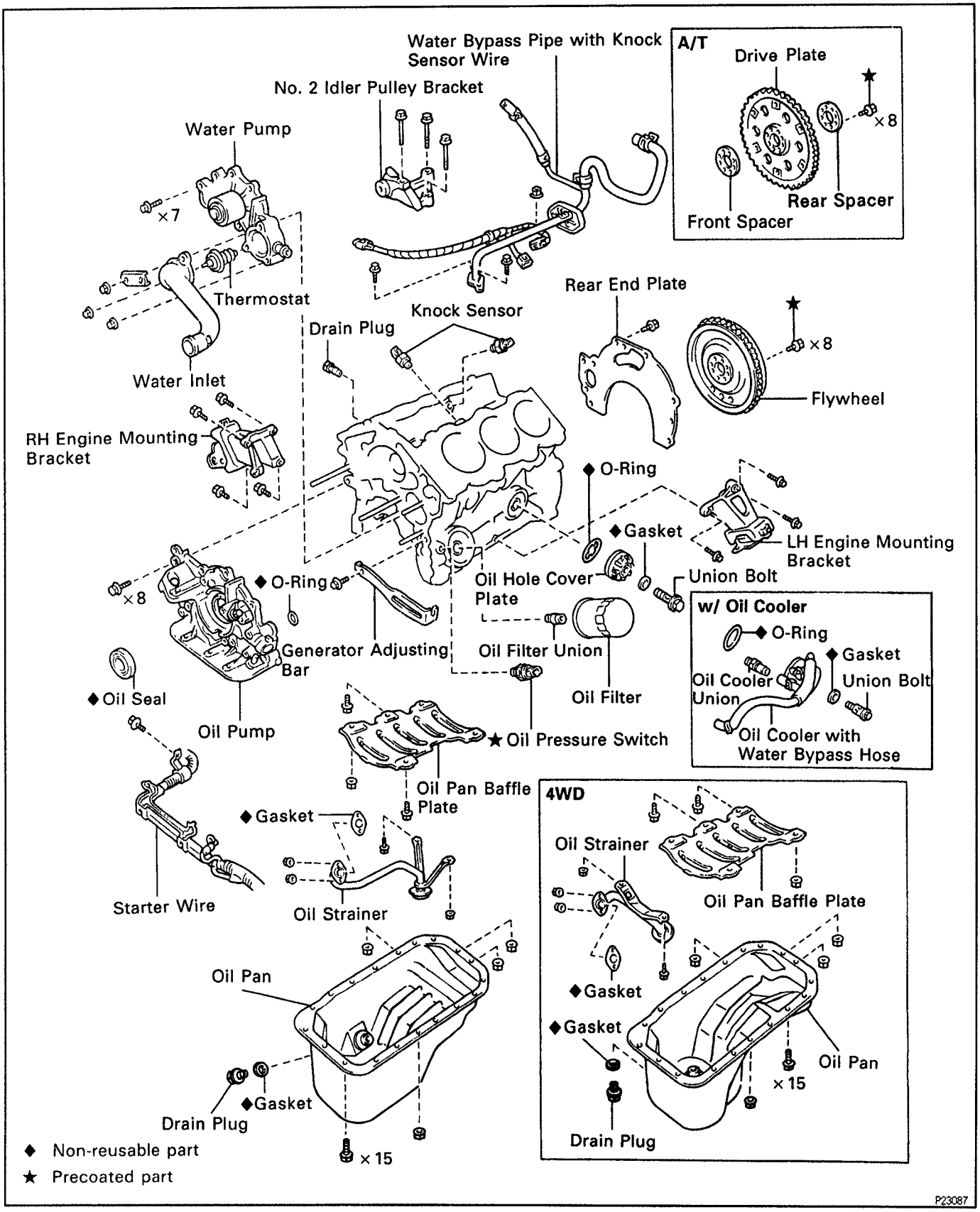

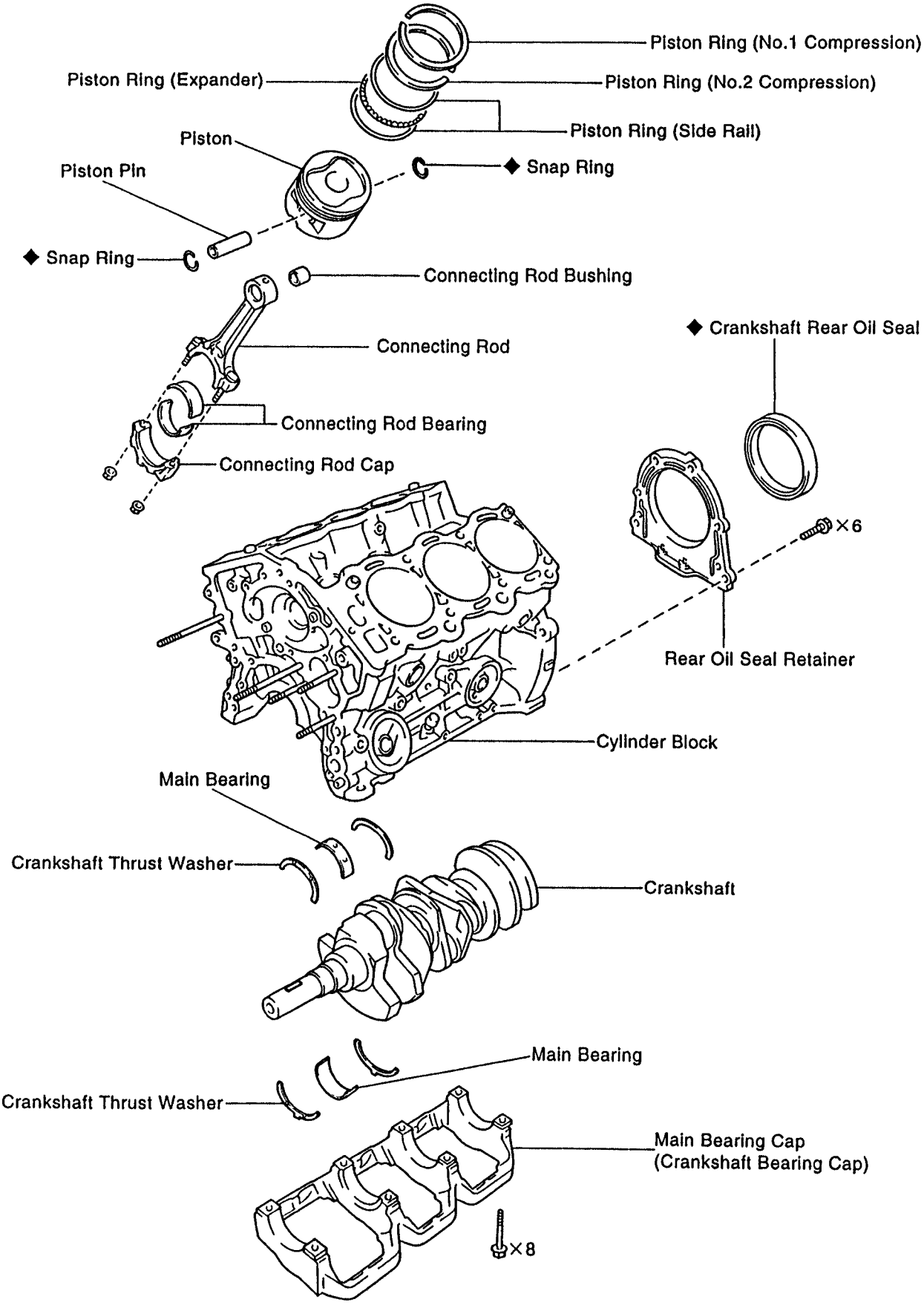

◆ Non-reusable part

P21786

EG

EG5BN–03

PREPARATION FOR DISASSEMBLY

1. **M/T:**
   REMOVE FLYWHEEL
2. **A/T:**
   REMOVE DRIVE PLATE
3. **REMOVE REAR END PLATE**
4. **INSTALL ENGINE TO ENGINE STAND FOR DISASSEMBLY**
5. **REMOVE TIMING BELT AND PULLEYS**
   (See steps 12 to 24 in timing belt removal)
6. **REMOVE CYLINDER HEADS**
   (See steps 5, 9 to 24 and 26 in cylinder heads removal)
7. **REMOVE WATER BYPASS PIPE WITH KNOCK SENSOR WIRE**

(a) Disconnect the 2 knock sensor connectors.
(b) Remove the 2 bolts, nut and water bypass pipe.

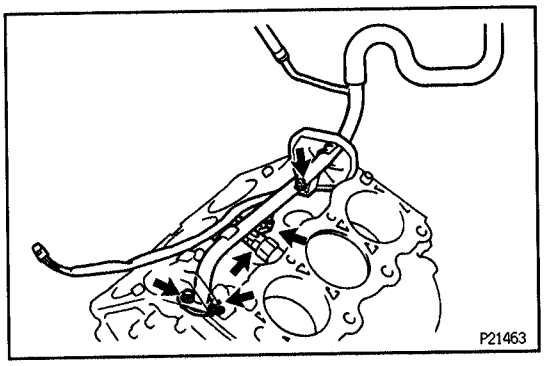

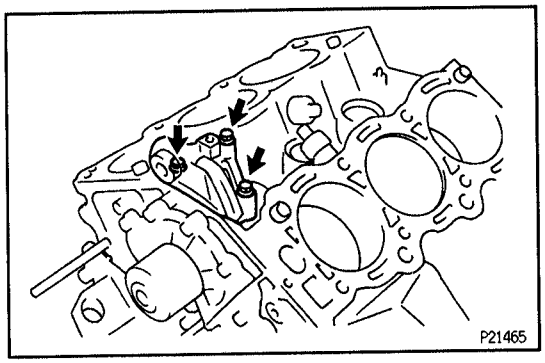

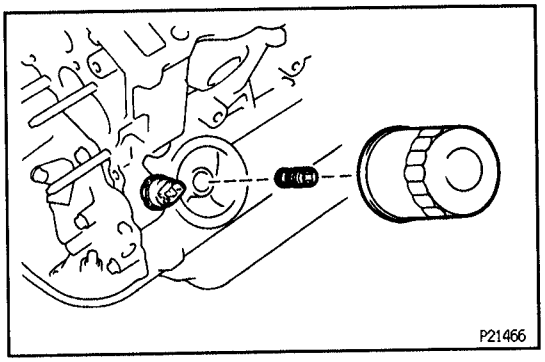

8. **REMOVE NO.2 IDLER PULLEY BRACKET**
   Remove the 3 bolts and idler pulley bracket.
9. **REMOVE KNOCK SENSORS**
   (See step 10 in knock sensors inspection in SFI system)
10. **REMOVE WATER PUMP**
    (See steps 2 to 4 in water pump removal in Cooling System)
11. **REMOVE GENERATOR ADJUSTING BAR**
12. **REMOVE OIL PRESSURE SWITCH**
    Using SST, remove the oil pressure switch.
    SST 09816–30010
13. **REMOVE OIL FILTER**
    Using SST, remove the oil filter.
    SST 09228–07501
14. **REMOVE OIL FILTER UNION**
    Using 12 mm hexagon wrench, remove the union.
15. **REMOVE RH AND LH ENGINE MOUNTING BRACKET**
16. **REMOVE COOLANT DRAIN COCK**
17. **w/o OIL COOLER:**
    REMOVE OIL HOLE COVER PLATE
18. **w/ OIL COOLER:**
    REMOVE OIL COOLER
    (See steps 2 and 3 in oil cooler removal in Lubrication System)
19. **REMOVE OIL PUMP**
    (See steps 7 and 9 to 12 in oil pump removal in Lubrication System)

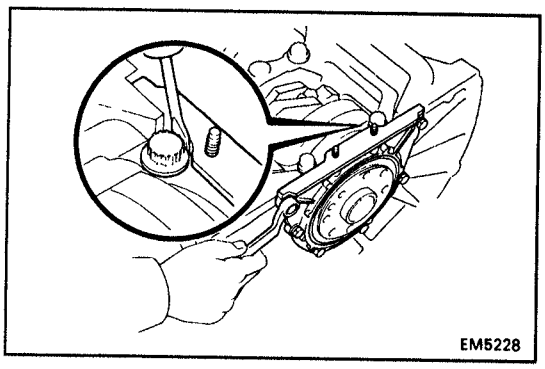

CYLINDER BLOCK DISASSEMBLY

EG5YK–01

1. REMOVE REAR OIL SEAL RETAINER

Remove the 6 bolts and retainer.

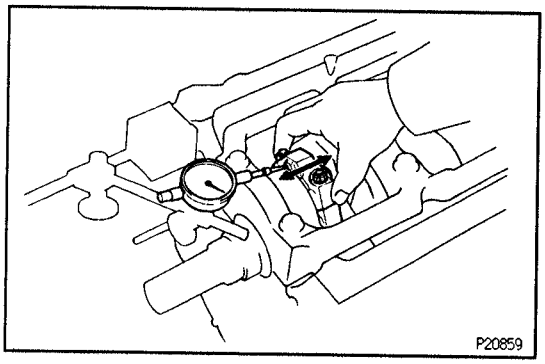

2. CHECK CONNECTING ROD THRUST CLEARANCE

Using a dial indicator, measure the thrust clearance while moving the connecting rod back and forth.

Standard thrust clearance:

0.150 – 0.330 mm (0.0059 – 0.0130 in.)

Maximum thrust clearance:

0.380 mm (0.0150 in.)

If the thrust clearance is greater than the maximum, replace the connecting rod assembly. If necessary, replace the crankshaft.

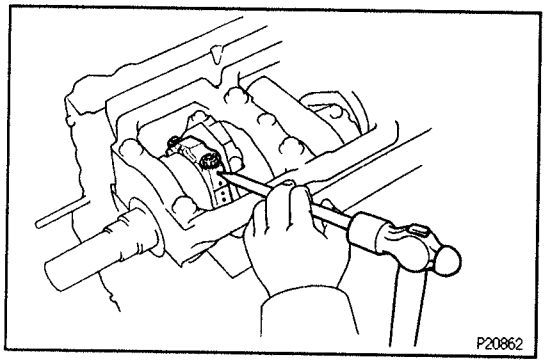

3. REMOVE CONNECTING ROD CAPS AND CHECK OIL CLEARANCE

(a) Using a punch or numbering stamp, mark the connecting rod and cap to ensure correct reassembly.

(b) Remove the connecting rod cap nuts.

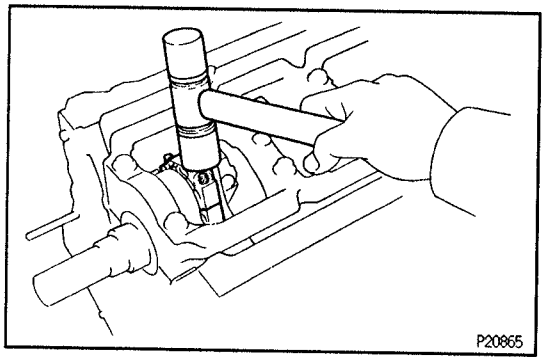

(c) Using a plastic–faced hammer, lightly tap the connecting rod bolts and lift off the connecting rod cap.
HINT: Keep the lower bearing inserted with the connecting rod cap.

(d) Cover the connecting rod bolts with a short piece of hose to protect the crankshaft from damage.

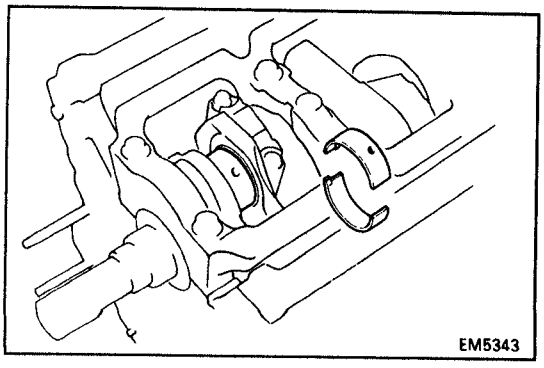

(e) Clean the crank pin and bearing.

(f) Check the crank pin and bearing for pitting and scratches.

If the crank pin or bearing is damaged, replace the bearings. If necessary, grind or replace the crankshaft.

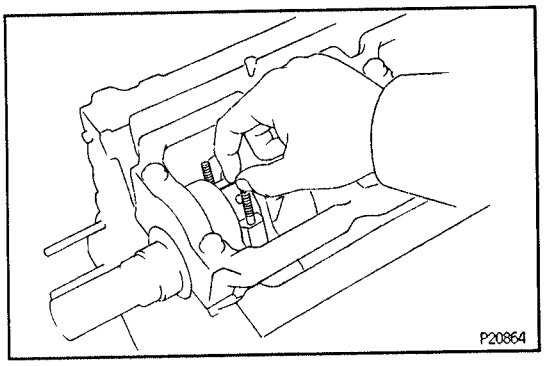

(g) Lay a strip of Plastigage across the crank pin.

(h) Install the connecting rod cap with the 2 nuts.
(See step 7 in cylinder block assembly)
Torque:
1st 25 N·m (250 kgf·cm, 18 ft·lbf)
2nd Turn extra 90°
NOTICE: Do not turn the crankshaft.

(i) Remove the 2 nuts and connecting rod cap.
(See procedure (b) and (c) above)

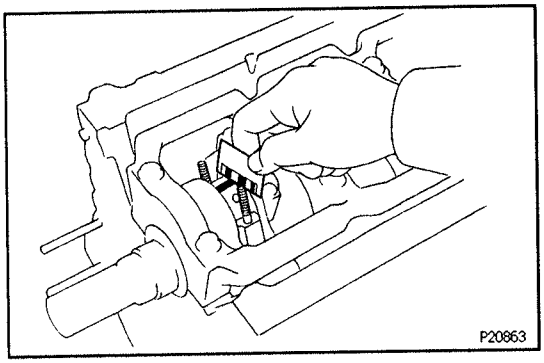

(j) Measure the Plastigauge at its widest point.
Standard oil clearance:
STD
0.024 – 0.053 mm (0.0009 – 0.0021 in.)
U/S 0.25
0.023 – 0.069 mm (0.0009 – 0.0027 in.)
Maximum oil clearance:
0.08 mm (0.0031 in.)
If the oil clearance is greater than the maximum, replace the bearings. If necessary, grind or replace the crankshaft.
HINT: If using a standard bearing, replace with one having the same number marked on the connecting rod cap. There are 3 sizes of standard bearings, marked "1", "2" and "3" accordingly.
Reference
Standard bearing center wall thickness:

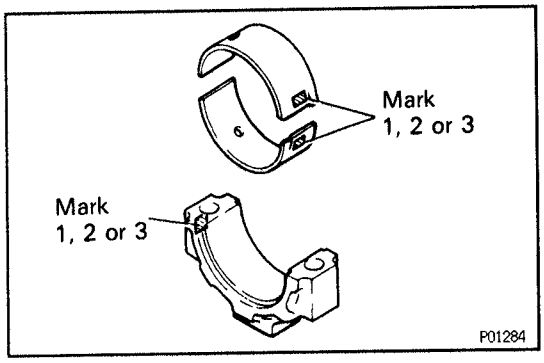

Mark	mm (in.)
"1"	1.484 – 1.488 (0.0584 – 0.0586)
"2"	1.488 – 1.492 (0.0586 – 0.0587)
"3"	1.492 – 1.496 (0.0587 – 0.0589)

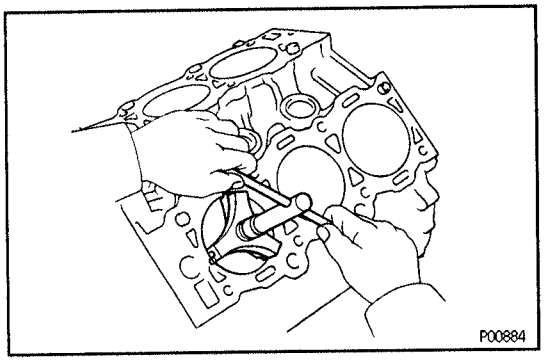

(k) Completely remove the Plastigauge.

4. REMOVE PISTON AND CONNECTING ROD ASSEMBLIES

(a) Using a ridge reamer, remove the all carbon from the top of the cylinder.

(b) Cover the connecting rod bolts with a short piece of hose to protect the crankshaft from damage.

(c) Push the piston, connecting rod assembly and upper bearing through the top of the cylinder block.
HINT:
- Keep the bearings, connecting rod and cap together.
- Arrange the piston and connecting rod assemblies in correct order.

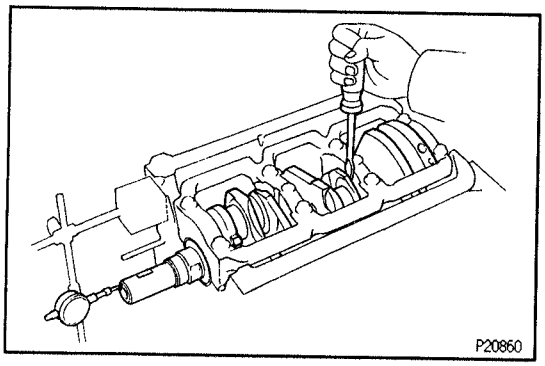

5. CHECK CRANKSHAFT THRUST CLEARANCE

Using a dial indicator, measure the thrust clearance while prying the crankshaft back and forth with a screwdriver.

Standard thrust clearance:

0.020 – 0.220 mm (0.0008 – 0.0087 in.)

Maximum thrust clearance:

0.300 mm (0.0118 in.)

If the thrust clearance is greater than the maximum, replace the thrust washers as a set.

Thrust washer thickness:

2.440 – 2.490 mm (0.0961 – 0.0980 in.)

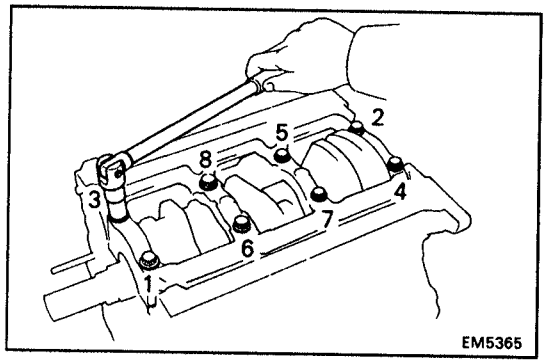

6. REMOVE MAIN BEARING CAP AND CHECK OIL CLEARANCE

(a) Uniformly loosen and remove the main bearing cap bolts, in several passes, in the sequence shown.

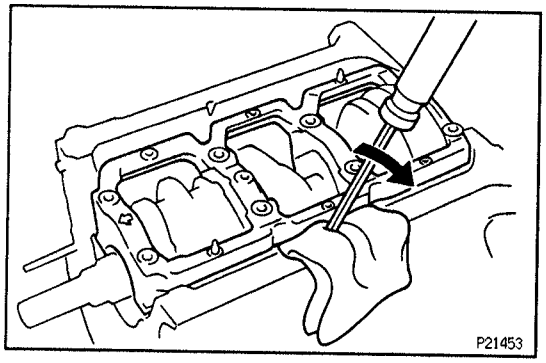

(b) Using a screwdriver, pry out the main bearing cap and remove the main bearing cap, lower main bearings and lower thrust washers (No.2 journal position of main bearing cap only).

HINT: Keep the lower main bearings and lower thrust washers together with the main bearing cap.

(c) Lift out the crankshaft.

HINT: Keep the upper main bearings and upper thrust washers together with the cylinder block.

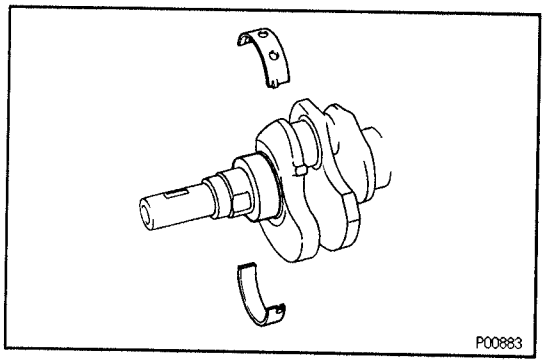

(d) Clean each main journal and bearing.

(e) Check each main journal and bearing for pitting and scratches.

If the journal or bearing is damaged, replace the bearings. If necessary, grind or replace the crankshaft.

(f) Place the crankshaft on the cylinder block.

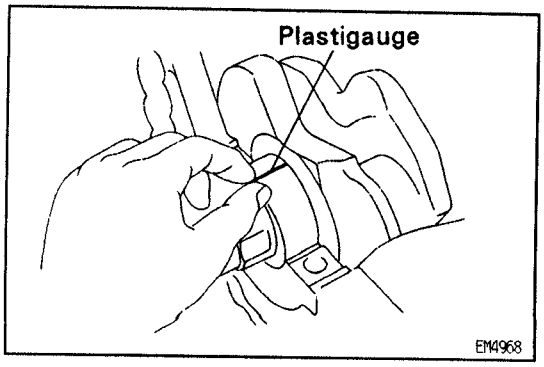

(g) Lay a strip of Plastigauge across each journal.

(h) Install the main bearing cap with the 8 bolts.
(See step 4 in cylinder block assembly)

Torque:

1st 61 N·m (625 kgf·cm, 45 ft·lbf)

2nd Turn extra 90°

NOTICE: Do not turn the crankshaft.

(i) Remove the 8 bolts and main bearing cap.
(See procedure (a) and (b) above)

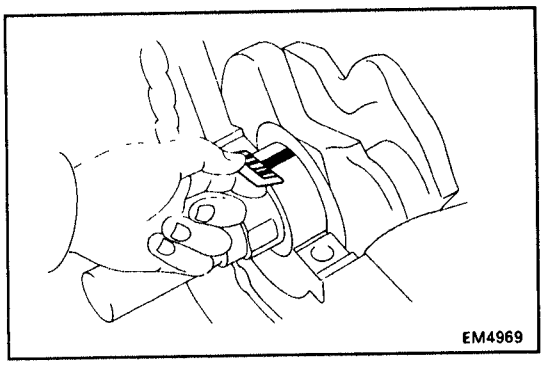
EM4969

EG

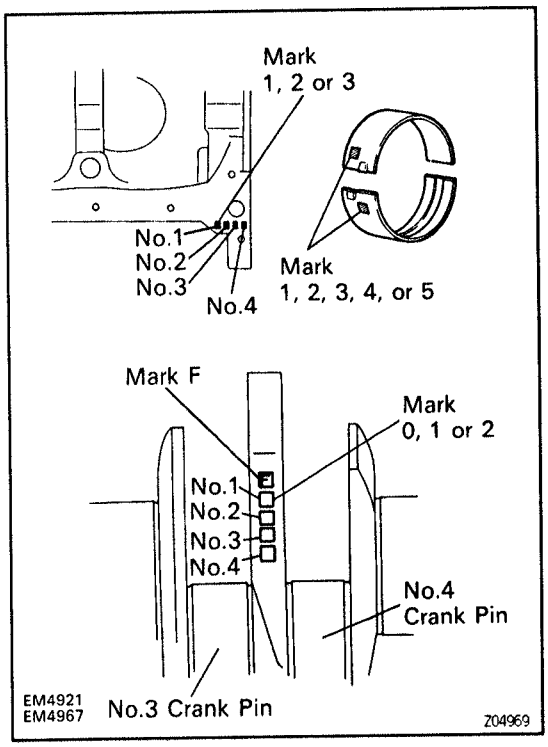

EM4921
EM4967
Z04969

(j) Measure the Plastigauge at its widest point.

Standard clearance:

Item	STD mm (in.)	U/S 0.25 mm (in.)
No.1	0.020 – 0.038 (0.0008 – 0.0015)	0.019 – 0.059 (0.0007 – 0.0023)
Others	0.024 – 0.042 (0.0009 – 0.0017)	0.023 – 0.063 (0.0009 – 0.0025)

Maximum clearance:

0.08 mm (0.0031 in.)

HINT: If replacing the cylinder block subassembly, the bearing standard clearance will be:

No.1:

0.010 – 0.049 mm (0.0004 – 0.0020 in.)

Others:

0.014 – 0.053 mm (0.0006 – 0.0021 in.)

If the oil clearance is greater than the maximum, replace the bearings. If necessary, grind or replace the crankshaft.

HINT: If using a standard bearing, replace with one having the same number. If the number of the bearing cannot be determined, select the correct bearing by adding together the numbers imprinted on the cylinder block and crankshaft, then selecting the bearing with the same number as the total. There are 5 sizes of standard bearings, marked "1", "2", "3", "4" and "5" accordingly.

	Number marked								
Cylinder block	1			2			3		
Crankshaft	0	1	2	0	1	2	0	1	2
Use bearing	1	2	3	2	3	4	3	4	5

EXAMPLE: Cylinder block "2" + Crankshaft "1"
= Total number 3 (Use bearing "3")

V00240

Reference:

Standard sized bearing center wall thickness:

No.1

Mark	mm (in.)
"1"	1.991 – 1.994 (0.0784 – 0.0785)
"2"	1.994 – 1.997 (0.0785 – 0.0786)
"3"	1.997 – 2.000 (0.0786 – 0.0787)
"4"	2.000 – 2.003 (0.0787 – 0.0789)
"5"	2.003 – 2.006 (0.0789 – 0.0790)

Others

Mark	mm (in.)
"1"	1.989 – 1.992 (0.0783 – 0.0784)
"2"	1.992 – 1.995 (0.0784 – 0.0785)
"3"	1.995 – 1.998 (0.0785 – 0.0787)
"4"	1.998 – 2.001 (0.0787 – 0.0788)
"5"	2.001 – 2.004 (0.0788 – 0.0789)

Cylinder block main journal bore diameter:

Mark	mm (in.)
"1"	68.010 – 68.016 (2.6776 – 2.6778)
"2"	68.016 – 68.022 (2.6778 – 2.6780)
"3"	68.022 – 68.028 (2.6780 – 2.6783)

Crankshaft main journal diameter:

Mark	mm (in.)
"0"	63.996 – 64.000 (2.5195 – 2.5197)
"1"	63.990 – 63.996 (2.5193 – 2.5195)
"2"	63.985 – 63.990 (2.5191 – 2.5193)

(k) Completely remove the Plastigauge.

7. REMOVE CRANKSHAFT

(a) Lift out the crankshaft.

(b) Remove the upper main bearings and upper thrust washers from the cylinder block.
HINT: Arrange the main bearings and thrust washers in correct order.

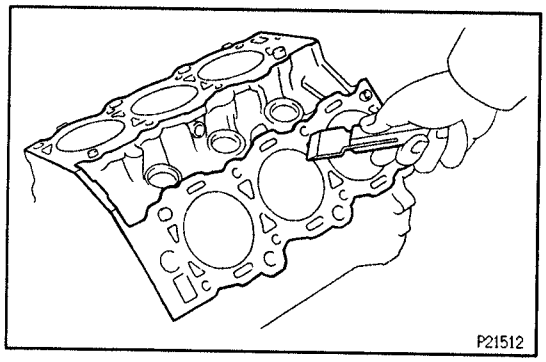
P21512

CYLINDER BLOCK INSPECTION

EG5YL–01

1. CLEAN CYLINDER BLOCK

A. Remove gasket material

Using a gasket scraper, remove all the gasket material from the top surface of the cylinder block.

B. Clean cylinder block

Using a soft brush and solvent, thoroughly clean the cylinder block.

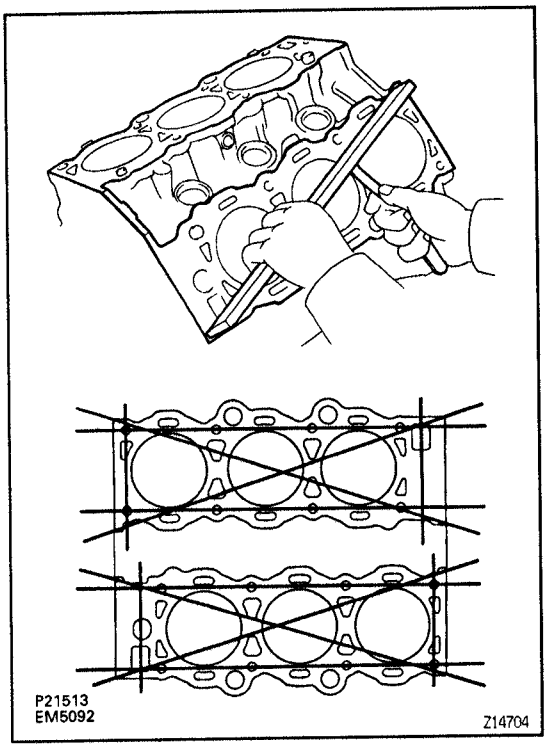

EG

2. INSPECT TOP SURFACE OF CYLINDER BLOCK FOR FLATNESS

Using a precision straight edge and feeler gauge, measure the surfaces contacting the cylinder head gasket for warpage.

Maximum warpage:

0.05 mm (0.0020 in.)

If warpage is greater than the maximum, replace the cylinder block.

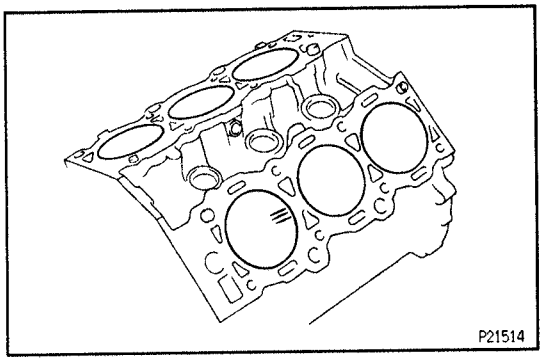

3. INSPECT CYLINDER FOR VERTICAL SCRATCHES

Visually check the cylinder for vertical scratches.

If deep scratches are present, rebore all the 6 cylinders. If necessary, replace the cylinder block.

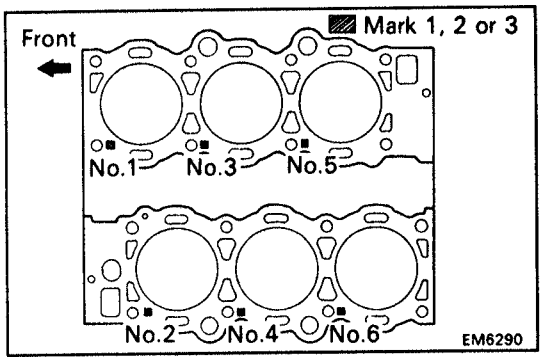

4. INSPECT CYLINDER BORE DIAMETER

HINT: There are 3 sizes of the standard cylinder bore diameter, marked "1", "2" and "3" accordingly. The mark is stamped on the top of the cylinder block.

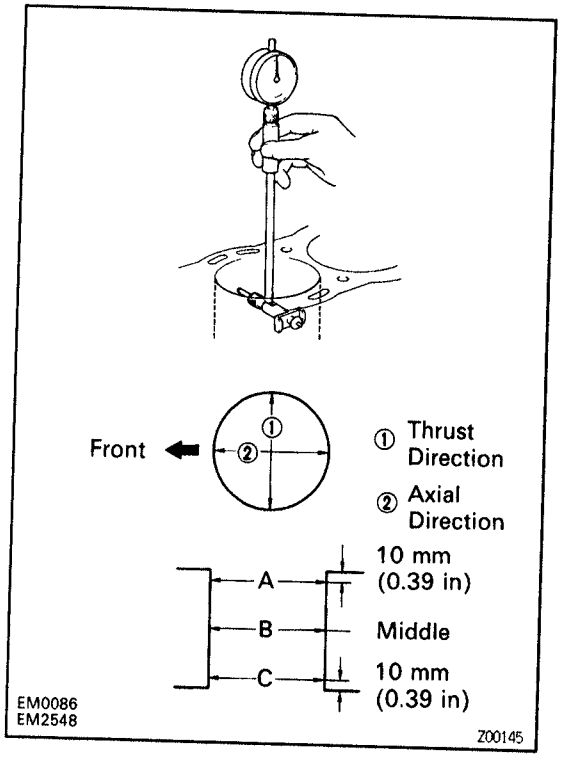

Using a cylinder gauge, measure the cylinder bore diameter at positions A, B and C in the thrust and axial directions.

Standard diameter:

STD

Mark	mm (in.)
"1"	93.500 – 93.510 (3.6811 – 3.6815)
"2"	93.510 – 93.520 (3.6815 – 3.6819)
"3"	93.520 – 93.530 (3.6819 – 3.6823)

Maximum diameter:

STD: 93.730 mm (3.6902 in.)

O/S 0.50: 94.230 mm (3.7098 in.)

If the diameter is greater than the maximum, rebore all the 6 cylinders. If necessary, replace the cylinder block.

5. REMOVE CYLINDER RIDGE

If the wear is less than 0.2 mm (0.008 in.), using a ridge reamer, grind the top of the cylinder.

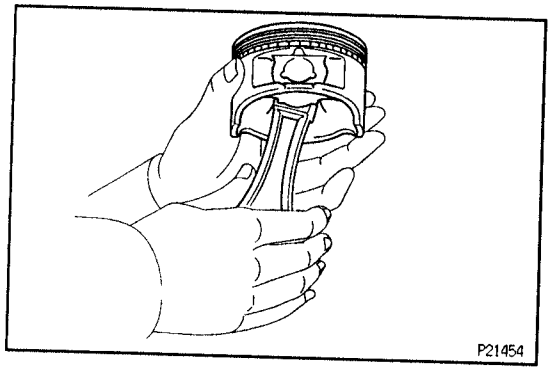

PISTON AND CONNECTING ROD DISASSEMBLY

EG1EL–06

1. CHECK FIT BETWEEN PISTON AND PISTON PIN

Try to move the piston back and forth on the piston pin.

If any movement is felt, replace the piston and pin as a set.

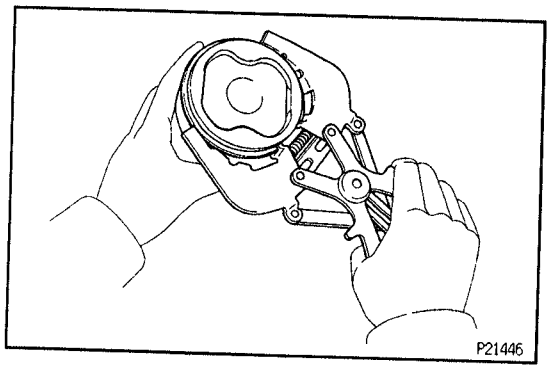

2. REMOVE PISTON RINGS

(a) Using a piston ring expander, remove the 2 compression rings.

(b) Remove the 2 side rails and oil ring by hand.

HINT: Arrange the piston rings in the correct order only.

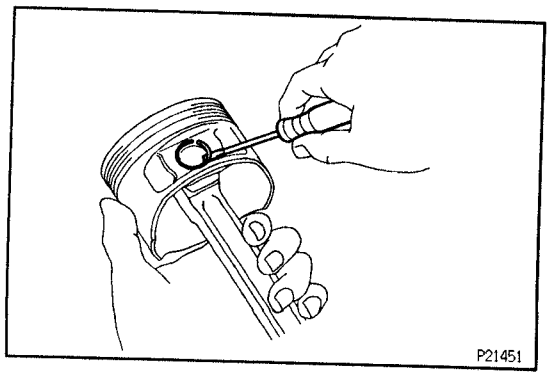

3. DISCONNECT CONNECTING ROD FROM PISTON

(a) Using a small screwdriver, pry out the 2 snap rings.

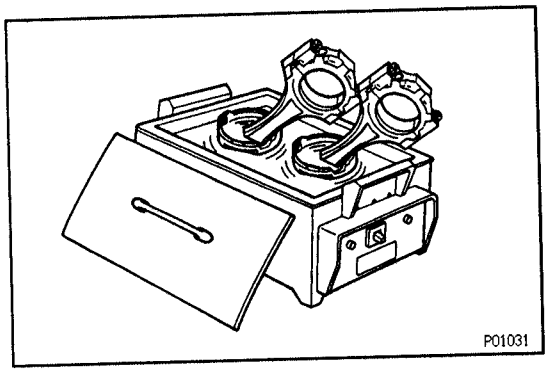

(b) Gradually heat the piston to about 60°C (140°F).

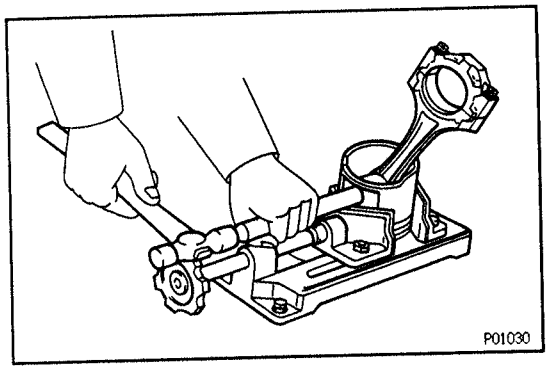

(c) Using a plastic–faced hammer and brass bar, lightly tap out the piston pin and remove the connecting rod.
HINT:
- The piston and pin are a matched set.
- Arrange the pistons, pins, rings, connecting rods and bearings in the correct order.

EG5BQ-03

PISTON AND CONNECTING ROD INSPECTION

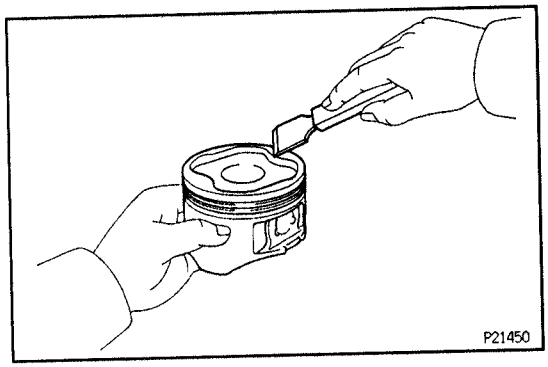

1. CLEAN PISTON

(a) Using a gasket scraper, remove the carbon from the piston top.

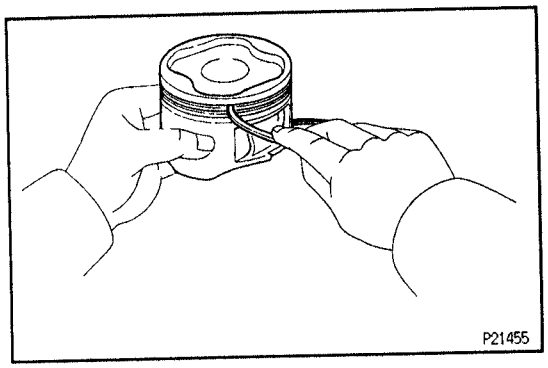

(b) Using a groove cleaning tool or broken ring, clean the piston ring grooves.

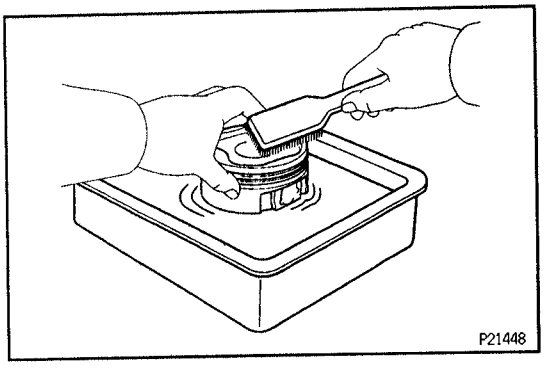

(c) Using solvent and a brush, thoroughly clean the piston.
NOTICE: Do not use a wire brush.

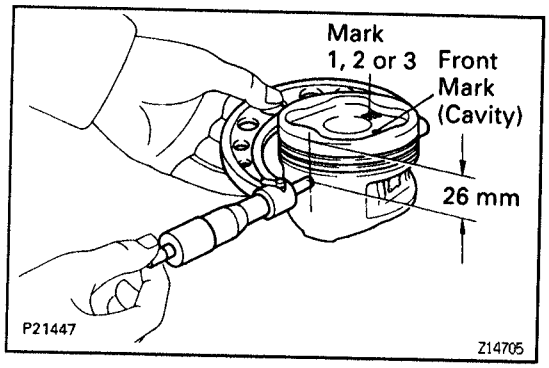

2. INSPECT PISTON

A. Inspect piston oil clearance

HINT: There are 3 sizes of the standard piston diameter, marked "1", "2" and "3" accordingly. The mark is stamped on the piston top.

(a) Using a micrometer, measure the piston diameter at right angles to the piston pin center line, 26 mm (1.02 in.) from the piston head.

Piston diameter:

STD

Mark	mm (in.)
"1"	93.356 – 93.366 (3.6754 – 3.6758)
"2"	93.367 – 93.376 (3.6759 – 3.6762)
"3"	93.377 – 93.386 (3.6763 – 3.6766)

O/S 0.50

93.856 – 93.886 mm (3.6951 – 3.6963 in.)

(b) Measure the cylinder bore diameter in the thrust directions.

(See step 4 in cylinder block inspection)

(c) Subtract the piston diameter measurement from the cylinder bore diameter measurement.

Standard oil clearance:

0.134 – 0.154 mm (0.0053 – 0.0060 in.)

Maximum oil clearance:

0.174 mm (0.0069 in.)

If the oil clearance is greater than the maximum, replace all the 6 pistons. If necessary, rebore all the 6 cylinders or replace the cylinder block.

HINT (Use new cylinder block): Use a piston with the same number mark as the standard bore diameter marked on the cylinder block.

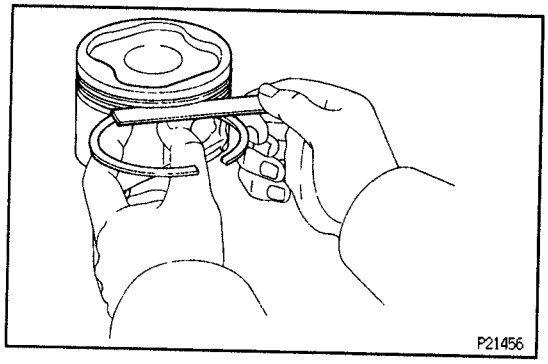

B. Inspect piston ring groove clearance

Using a feeler gauge, measure the clearance between new piston ring and the wall of the piston ring groove.

Standard ring groove clearance:

No.1: 0.040 – 0.080 mm (0.0016 – 0.0031 in.)

No.2: 0.030 – 0.070 mm (0.0012 – 0.0028 in.)

If the clearance is not as specified, replace the piston.

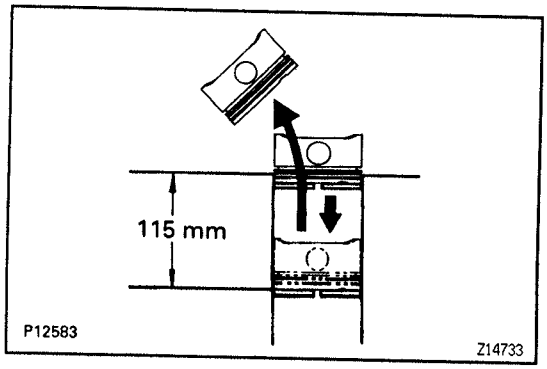

C. Inspect piston ring end gap

(a) Insert the piston ring into the cylinder bore.

(b) Using a piston, push the piston ring a little beyond the bottom of the ring travel, 115 mm (4.53 in.) from the top of the cylinder block.

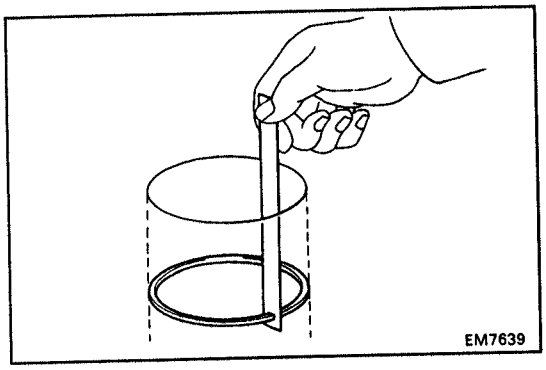

(c) Using a feeler gauge, measure the ring end gap.

Ring end gap:

Piston ring	STD mm (in.)	Maximum mm (in.)
No.1	0.300 – 0.500 (0.0118 – 0.0197)	1.100 (0.0433)
No.2	0.400 – 0.600 (0.0157 – 0.0236)	1.200 (0.0472)
Oil (Side rail)	0.150 – 0.550 (0.0059 – 0.0217)	1.150 (0.0453)

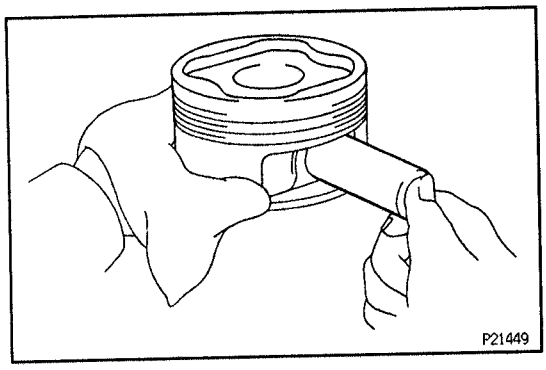

If the end gap is greater than the maximum, replace the piston ring. If the end gap is greater than the maximum, even with a new piston ring, rebore all the 6 cylinders or replace the cylinder block.

D. Inspect piston pin fit

At 60°C (140°F), you should be able to push the piston pin into the piston pin hole with your thumb.

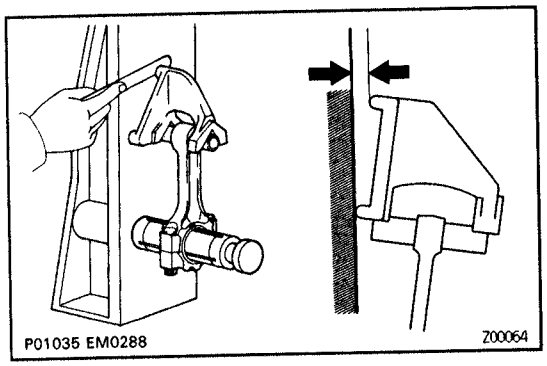

3. INSPECT CONNECTING ROD

A. Inspect connecting rod alignment

Using a rod aligner and feeler gauge, check the connecting rod alignment.

- Check for bend.

Maximum bend:

0.05 mm (0.0020 in.) per 100 mm (3.94 in.)

If bend is greater than the maximum, replace the connecting rod assembly.

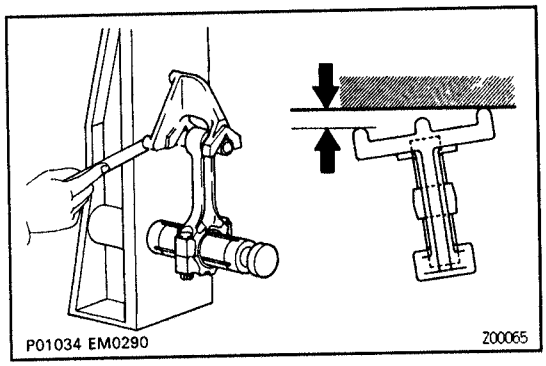

- Check for twist.

Maximum twist:

0.15 mm (0.0059 in.) per 100 mm (3.94 in.)

If twist is greater than the maximum, replace the connecting rod assembly.

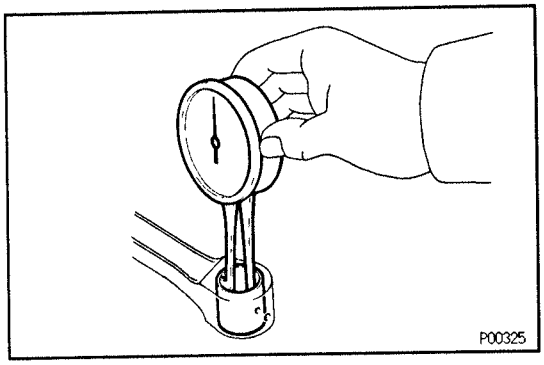

B. Inspect piston pin oil clearance

(a) Using a caliper gauge, measure the inside diameter of the connecting rod bushing.

Bushing inside diameter:

22.005 – 22.017 mm (0.8663 – 0.8668 in.)

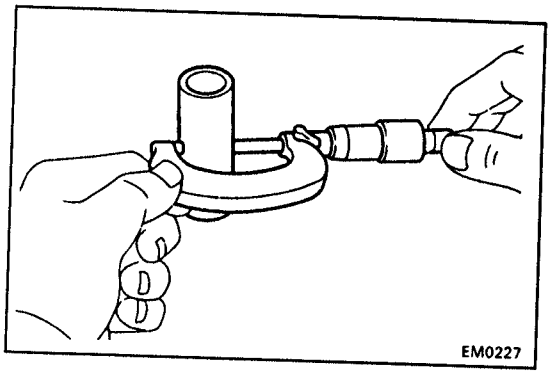

(b) Using a micrometer, measure the piston pin diameter.
Piston pin diameter:
21.997 – 22.009 mm (0.8660 – 0.8665 in.)

(c) Subtract the piston pin diameter measurement from the bushing inside diameter measurement.
Standard oil clearance:
0.005 – 0.011 mm (0.0002 – 0.0004 in.)
Maximum oil clearance:
0.05 mm (0.0020 in.)
If the oil clearance is greater than the maximum, replace the bushing. If necessary, replace the piston and piston pin as a set.

C. If necessary, replace connecting rod bushing

(a) Using SST and a press, press out the bushing.
SST 09222–30010

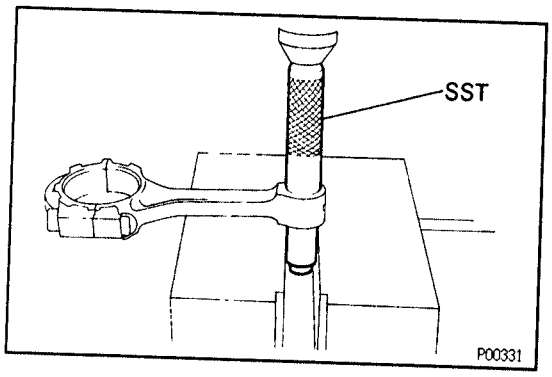

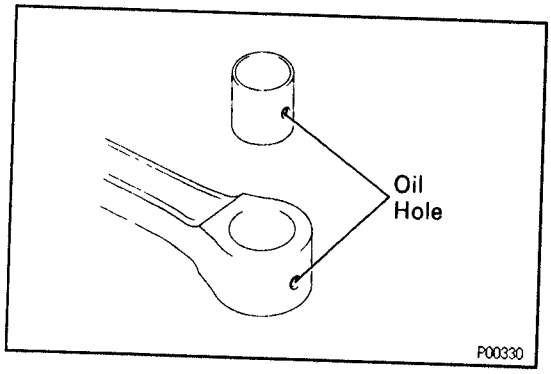

(b) Align the oil holes of a new bushing and the connecting rod.

(c) Using SST and a press, press in the bushing.
SST 09222–30010

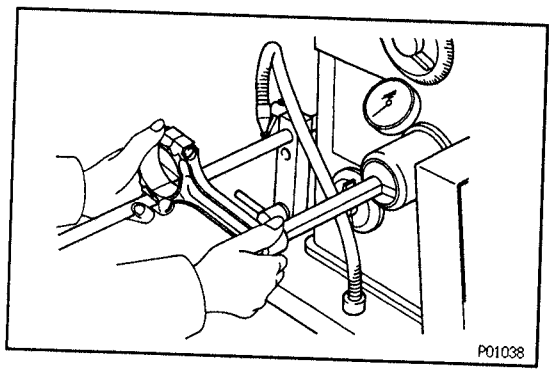

(d) Using a pin hole grinder, hone the bushing to obtain the standard specified clearance (see step B above) between the bushing and piston pin.

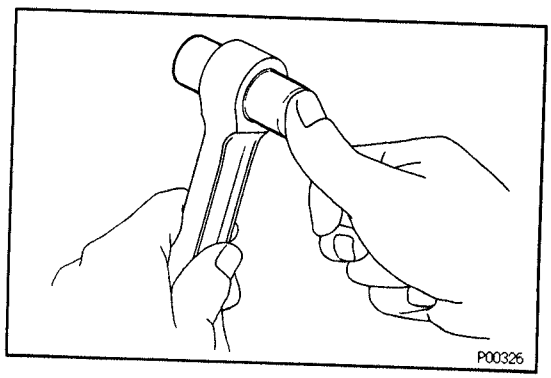

(e) Check the piston pin fit at normal room temperature. Coat the piston pin with engine oil, and push it into the connecting rod with your thumb.

EG

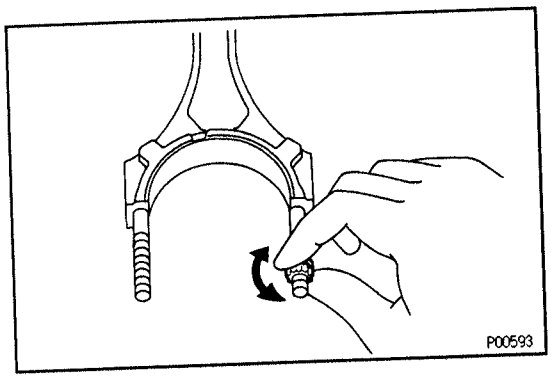

D. Inspect connecting rod bolts

(a) Install the cap nut to the connecting rod bolt. Check that the rod cap nut can be turned easily by hand to the end of the thread.

(b) If the cap nut cannot be turned easily, measure the outer diameter of the compressed thread with a vernier caliper.

Standard outer diameter:

7.860 – 8.000 mm (0.3094 – 0.3150 in.)

Minimum outer diameter:

7.600 mm (0.2992 in.)

HINT: If the location of this area cannot be judged by visual inspection, measure the outer diameter at the location shown in the illustration.

If the outer diameter is less than the minimum, replace the connecting rod and rod cap nut as a set.

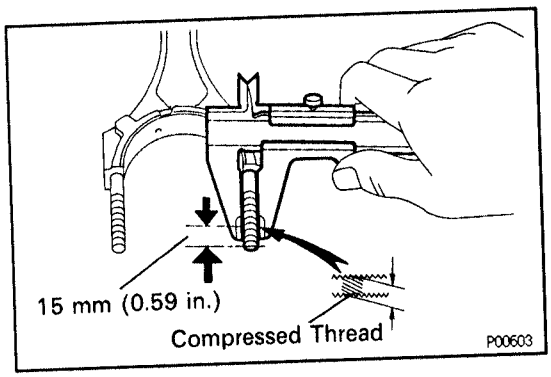

EG1ZR-04

CYLINDER BORING

HINT:

- Bore all the 6 cylinders for the oversized piston outside diameter.
- Replace all the piston rings with ones to match the oversized pistons.

1. KEEP OVERSIZED PISTONS

Oversized piston diameter:

O/S 0.50

93.856 – 93.886 mm (3.6951 – 3.6963 in.)

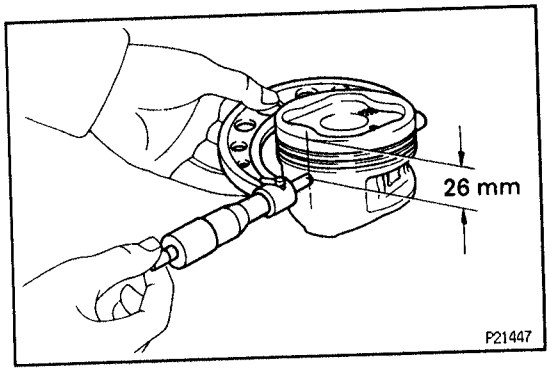

2. CALCULATE AMOUNT TO BORE CYLINDERS

(a) Using a micrometer, measure the piston diameter at right angles to the piston pin center line, 26 mm (1.02 in.) from the piston head.

(b) Calculate the amount of each cylinder is to be rebored as follows:

Size to be rebored = P + C – H

P = Piston diameter

C = Piston oil clearance

0.134 – 0.154 mm (0.0053 – 0.0060 in.)

H = Allowance for honing

0.02 mm (0.0008 in.) or less

3. BORE AND HONE CYLINDER TO CALCULATED DIMENSIONS

Maximum honing:

0.02 mm (0.0008 in.)

NOTICE: Excess honing will destroy the finished roundness.

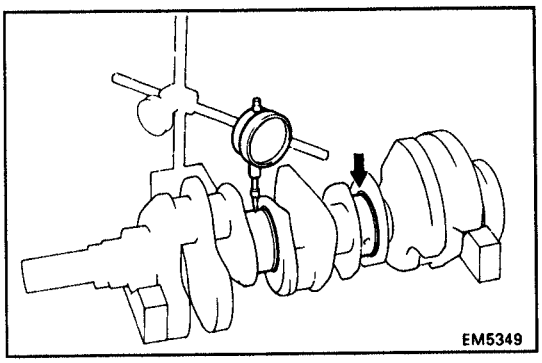

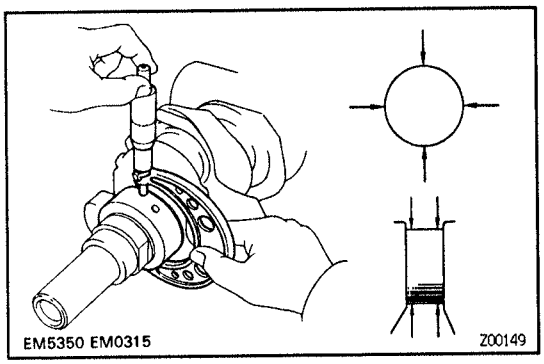

CRANKSHAFT INSPECTION AND REPAIR EG1Z8-06

1. INSPECT CRANKSHAFT FOR RUNOUT

(a) Place the crankshaft on V–blocks.

(b) Using a dial indicator, measure the circle runout at the No.2 and No.3 journals.

Maximum circle runout: 0.06 mm (0.0024 in.)

If the circle runout is greater than the maximum, replace the crankshaft.

2. INSPECT MAIN JOURNALS AND CRANK PINS

(a) Using a micrometer, measure the diameter of each main journal and crank pin.

Diameter:

Item	STD mm (in.)	U/S 0.25 mm (in.)
Main journal	63.985 – 64.000 (2.5191 – 2.5197)	63.745 – 63.755 (2.5096 – 2.5100)
Crank pin	54.987 – 55.000 (2.1648 – 2.1654)	54.745 – 54.755 (2.1553 – 2.1557)

If the diameter is not as specified, check the oil clearance.

(See steps 3 and 6 in cylinder block disassembly)

(b) Check each main journal and crank pin for taper and out–of–round as shown.

Maximum taper and out–of–round:

0.02 mm (0.0008 in.)

If the taper or out–of–round is greater than the maximum, grind or replace the crankshaft.

3. IF NECESSARY, GRIND AND HONE MAIN JOURNALS AND/OR CRANK PINS

Grind and hone the main journals and/or crank pins to the finished undersized diameter (See procedure step 2).

Install new main journal and/or crank pin undersized bearings.

CRANKSHAFT OIL SEALS REPLACEMENT EGBYM-01

HINT: There are 2 methods (A and B) to replace the oil seal which are as follows:

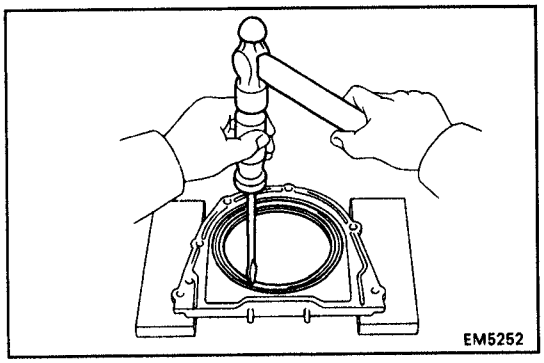

1. REPLACE CRANKSHAFT FRONT OIL SEAL

(See crankshaft front oil seal replacement in Lubrication System)

2. REPLACE CRANKSHAFT REAR OIL SEAL

A. If rear oil seal retainer is removed from cylinder block:

(a) Using a screwdriver and hammer, tap out the oil seal.

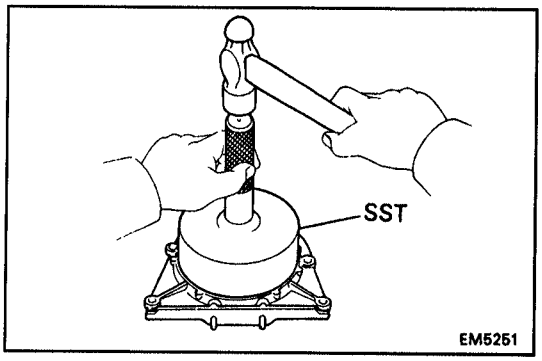

(b) Using SST and a hammer, tap in a new oil seal until its surface is flush with the rear oil seal retainer edge.
SST 09223–15030, 09950–70010 (09951–07150)
(c) Apply MP grease to the oil seal lip.

EG

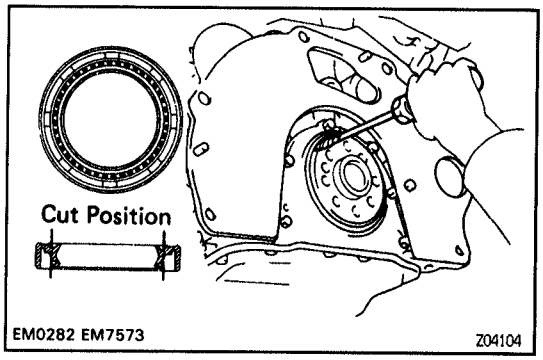

B. If rear oil seal retainer is installed to cylinder block:
(a) Using a knife, cut off the oil seal lip.
(b) Using a screwdriver, pry out the oil seal.
NOTICE: Be careful not to damage the crankshaft. Tape the screwdriver tip.

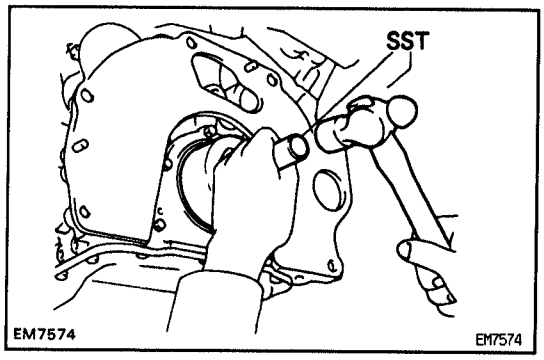

(c) Apply MP grease to a new oil seal lip.
(d) Using SST and a hammer, tap in the oil seal until its surface is flush with the rear oil seal retainer edge.
SST 09223–15030, 09950–70010 (09951–07150)

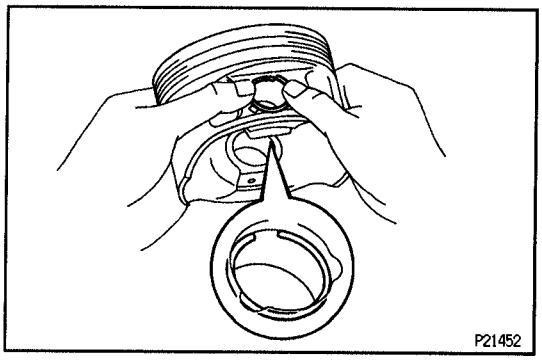

PISTON AND CONNECTING ROD ASSEMBLY

8GBYN-01

1. ASSEMBLE PISTON AND CONNECTING ROD

(a) Using a small screwdriver, install a new snap ring at one end of the piston pin hole.
HINT: Be sure that end gap of the snap ring is not aligned with the pin hole cutout portion of the piston.
(b) Gradually heat the piston to about 60°C (140°F).

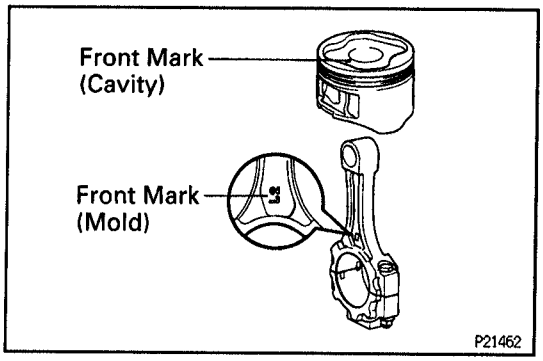

(c) Coat the piston pin with engine oil.
(d) Align the front marks of the piston and connecting rod, and push in the piston pin with your thumb.
(e) Using a small screwdriver, install a new snap ring on the other end of the piston pin hole.
HINT: Be sure that end gap of the snap ring is not aligned with the pin hole cutout portion of the piston.

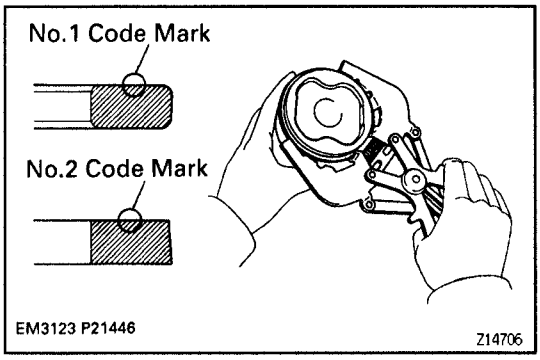

2. INSTALL PISTON RINGS

(a) Install the oil ring expander and 2 side rails by hand.

(b) Using a piston ring expander, install the 2 compression rings with the code mark facing upward.

Code mark:

No.1

1R or T

No.2

2R or T

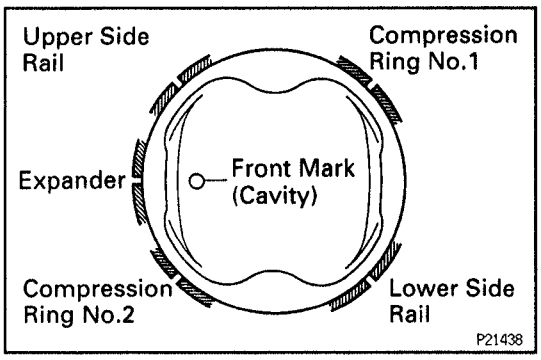

(c) Position the piston rings so that the ring ends are as shown.

NOTICE: Do not align the ring ends.

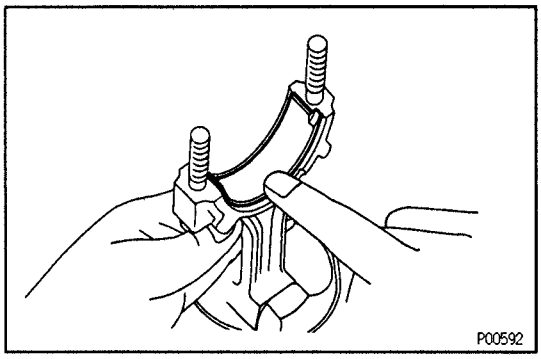

3. INSTALL BEARINGS

(a) Align the bearing claw with the groove of the connecting rod or connecting cap.

(b) Install the bearings in the connecting rod and connecting rod cap.

CYLINDER BLOCK ASSEMBLY

EQ5YP–01

HINT:

- Thoroughly clean all parts to be assembled.
- Before installing the parts, apply new engine oil to all sliding and rotating surfaces.
- Replace all gaskets, O–rings and oil seals with new parts.

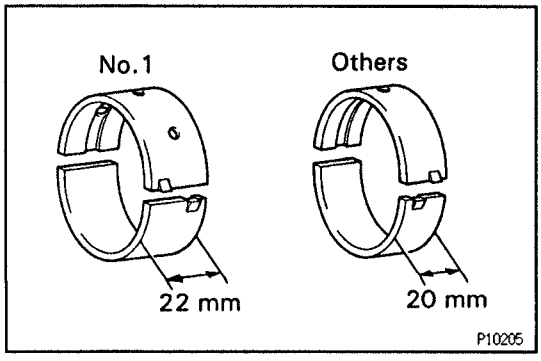

1. INSTALL MAIN BEARINGS

HINT:

- Main bearings come in widths of 20 mm (0.79 in.) and 22 mm (0.87 in.). Install the 22 mm (0.87 in.) bearings in the No.1 cylinder block journal position with the main bearing caps. Install the 20 mm (0.79 in.) bearings in the other positions.
- Upper bearings have an oil holes; lower bearings do not.

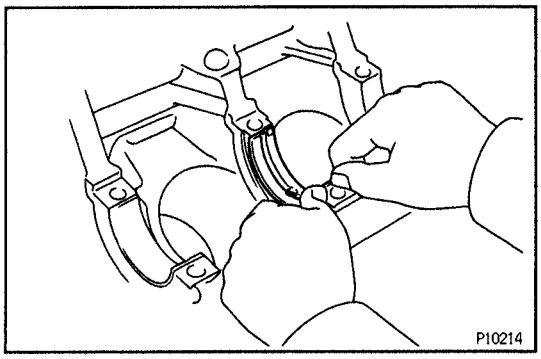

(a) Align the bearing claw with the claw groove of the main bearing cap or cylinder block.
(b) Install the bearings in the cylinder block and main bearing cap.

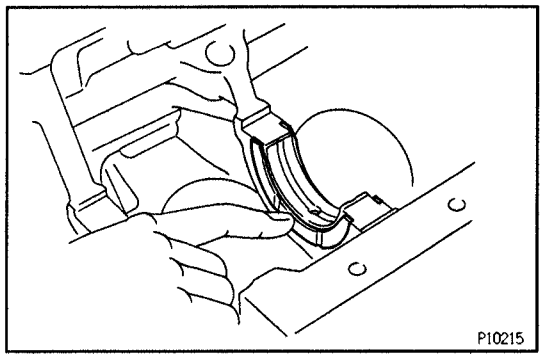

2. INSTALL UPPER THRUST WASHERS
Install the thrust washers under the No.2 journal position of the cylinder block with the oil grooves facing outward.

3. PLACE CRANKSHAFT ON CYLINDER BLOCK

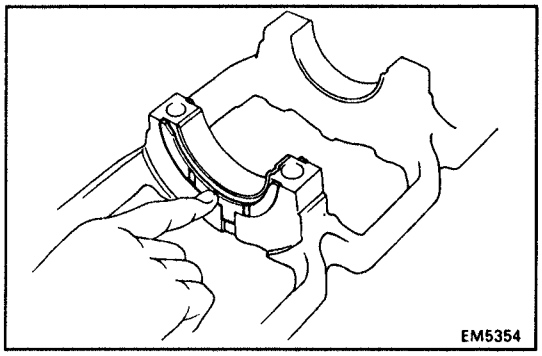

4. INSTALL MAIN BEARING CAP AND LOWER THRUST WASHERS

A. Place main bearing cap and lower thrust washers on cylinder block

(a) Install the thrust washers on the No.2 journal position of the bearing cap with the grooves facing outward.

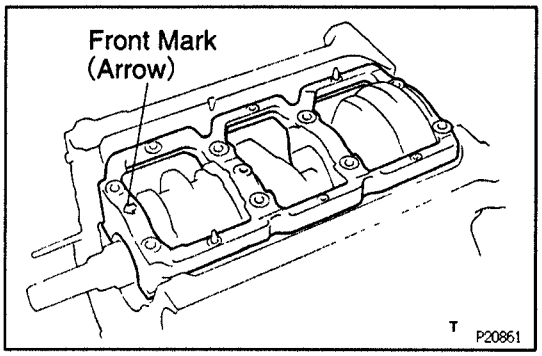

(b) Install the main bearing cap with the front mark facing forward.

B. Install main bearing cap bolts
HINT:
- The main bearing cap bolts are tightened in 2 progressive steps (steps (b) and (d)).
- If any main bearing cap bolt is broken or deformed, replace it.

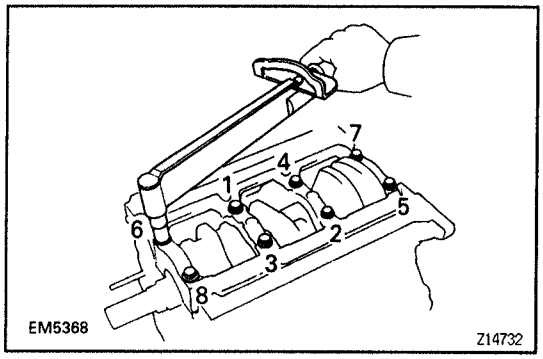

(a) Apply a light coat of engine oil on the threads and under the heads of the main bearing cap bolts.
(b) Install and uniformly tighten the 8 main bearing cap bolts in several passes, in the sequence shown.
Torque: 61 N·m (625 kgf·cm, 45 ft·lbf)
If any one of the main bearing cap bolts does not meet the torque specification, replace the cap bolt.

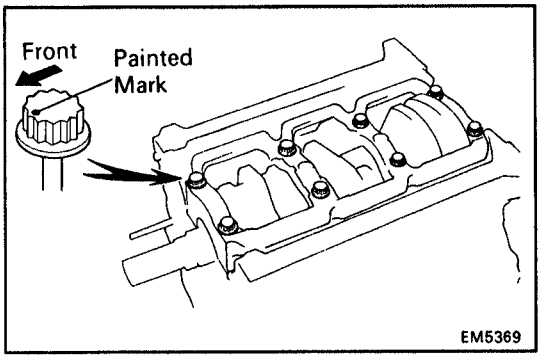

(c) Mark the front of the main bearing cap bolt with paint.

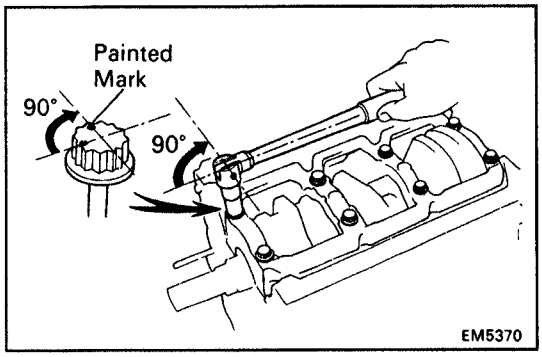

(d) Retighten the main bearing cap bolts by 90° in the numerical order shown.
(e) Check that the painted mark is now at a 90° angle to the front.
(f) Check that the crankshaft turns smoothly.

5. CHECK CRANKSHAFT THRUST CLEARANCE
(See step 5 in cylinder block disassembly)

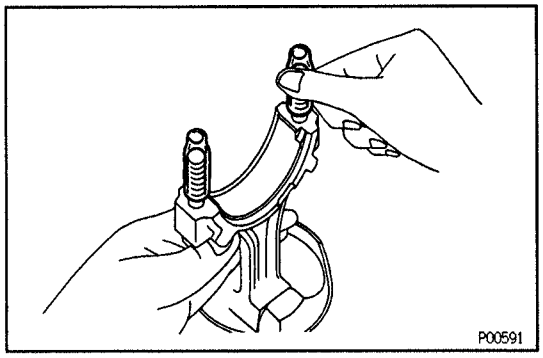

6. INSTALL PISTON AND CONNECTING ROD ASSEMBLIES

(a) Cover the connecting rod bolts with a short piece of hose to protect the crankshaft from damage.

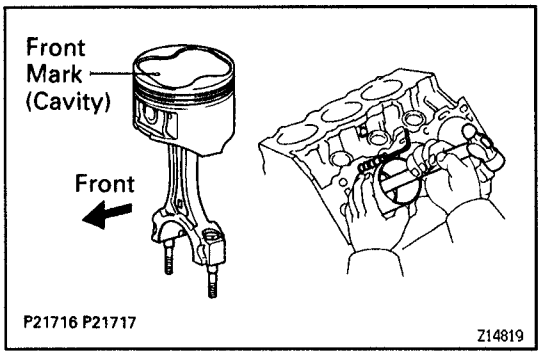

(b) Using a piston ring compressor, push the correctly numbered piston and connecting rod assemblies into each cylinder with the front mark of the piston facing forward.

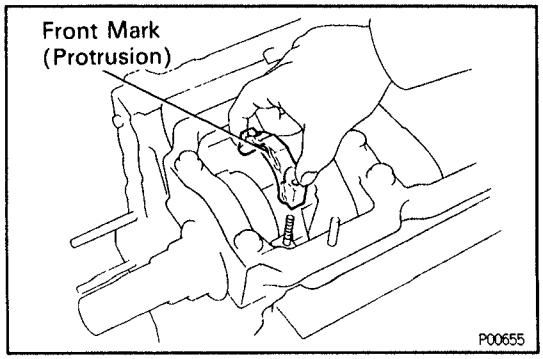

7. INSTALL CONNECTING ROD CAPS

A. Place connecting rod cap on connecting rod

(a) Match the numbered connecting rod cap with the connecting rod.
(b) Install the connecting rod cap with the front mark facing forward.

B. Install connecting rod cap nuts

HINT:

- The connecting rod cap nuts are tightened in 2 progressive steps (steps (b) and (d)).

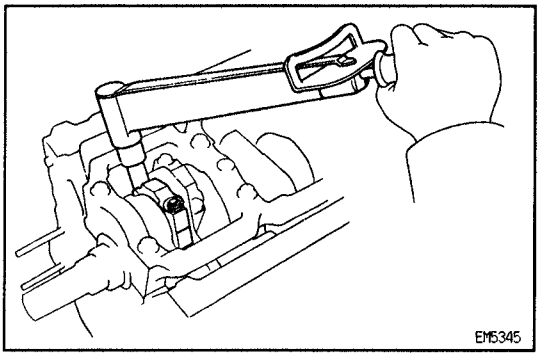

- If any connecting rod bolt is broken or deformed, replace it.

(a) Apply a light of engine oil on the threads and under the nuts of the connecting rod cap.

(b) Install and alternately tighten the nuts of the connecting rod cap in several passes.
Torque: 25 N·m (250 kgf·cm, 18 ft·lbf)
If any one of the connecting rod cap nuts does not meet the torque specification, replace the cap nut.

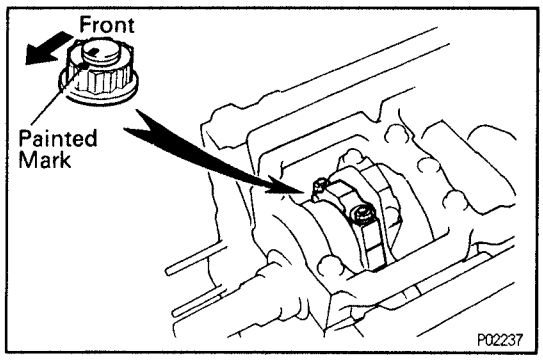

(c) Mark the front of the connecting rod cap nut and bolt with paint.

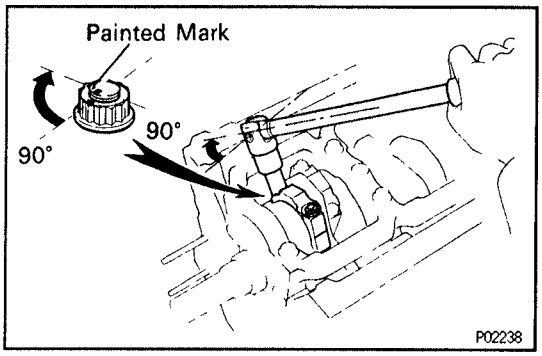

(d) Retighten the connecting rod cap nuts 90° as shown.

(e) Check that the painted mark is now at a 90° angle to the front.

(f) Check that the crankshaft turns smoothly.

8. CHECK CONNECTING ROD THRUST CLEARANCE
(See step 2 in cylinder block disassembly)

9. INSTALL REAR OIL SEAL RETAINER

(a) Remove any old packing (FIPG) material and be careful not to drop any oil on the contact surfaces of the retainer and cylinder block.

- Using a razor blade and gasket scraper, remove all the old packing (FIPG) material from the gasket surfaces and sealing groove.
- Thoroughly clean all components to remove all the loose material.
- Using a non–residue solvent, clean both sealing surfaces.

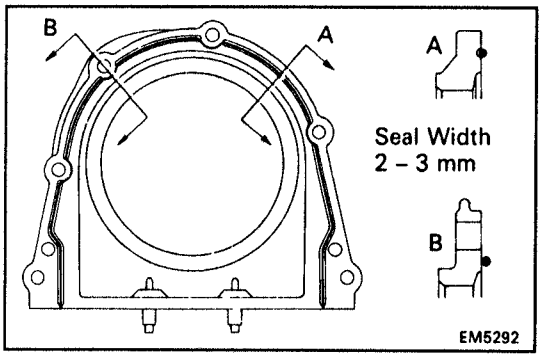

(b) Apply seal packing to the oil seal retainer as shown in the illustration.
Seal packing:
Part No.08826–00080 or equivalent

- Install a nozzle that has been cut to a 2 – 3 mm (0.08 – 0.12 in.) opening.
- Parts must be assembled within 5 minutes of application. Otherwise the material must be removed and reapplied.
- Immediately remove nozzle from the tube and reinstall cap.

(c) Install the oil seal retainer with the 6 bolts.
Torque: 8 N·m (80 kgf·cm, 71 in.·lbf)

EGBVQ–01

AFTER ASSEMBLY

1. **INSTALL OIL PUMP**
   (See steps 1, 3 to 6 and 9 in oil pump installation in Lubrication System)
2. **w/ OIL COOLER:**
   INSTALL OIL COOLER
   (See steps 2 and 3 in oil cooler removal in Lubrication System)
3. **w/o OIL COOLER:**
   INSTALL OIL HOLE COVER PLATE
   Torque: 60 N·m (600 kgf·cm, 44 ft·lbf)
4. **INSTALL COOLANT DRAIN COCK**
   Torque: 39 N·m (400 kgf·cm, 29 ft·lbf)
5. **INSTALL RH AND LH ENGINE MOUNTING BRACKET**
   Torque: 44 N·m (440 kgf·cm, 32 ft·lbf)
6. **INSTALL OIL FILTER UNION**
   Torque: 25 N·m (250 kgf·cm, 18 ft·lbf)
7. **INSTALL OIL FILTER**
   (See step 2 in oil and filter replacement in Lubrication System)

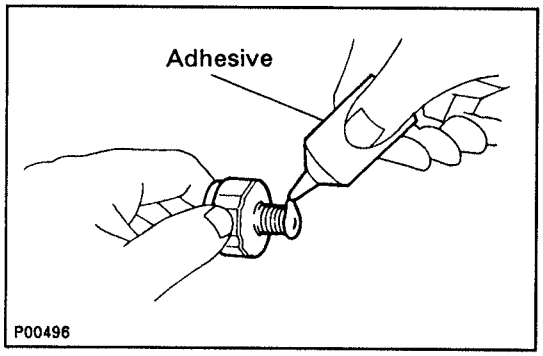

8. **INSTALL OIL PRESSURE SWITCH**
   (a) Apply adhesive to 2 or 3 threads of the oil pressure switch.
   Adhesive:
   Part No. 08833 – 00080, THREE BOND 1344, LOCTITE 242 or equivalent
   (b) Using SST, install the oil pressure switch.
   SST 09816–30010
   Torque: 15 N·m (150 kgf·cm, 11 ft·lbf)
9. **INSTALL GENERATOR ADJUSTING BAR**
   Torque: 42 N·m (420 kgf·cm, 31 ft·lbf)
10. **INSTALL WATER PUMP**
    (See steps 1 to 3 in water pump installation in Cooling System)
11. **INSTALL KNOCK SENSORS**
    (See step 12 in knock sensors inspection in SFI System)
12. **INSTALL NO.2 IDLER PULLEY BRACKET**
    Torque: 38 N·m (380 kgf·cm, 28 ft·lbf)

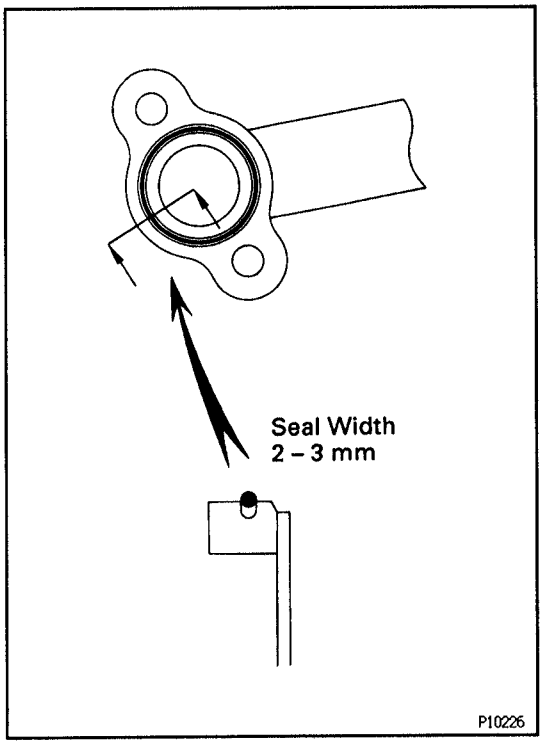

13. INSTALL WATER BYPASS PIPE WITH KNOCK SENSOR WIRE

(a) Remove any old packing (FIPG) material and be careful not to drop any oil on the contact surfaces of the bypass and cylinder block.
- Using a razor blade and gasket scraper, remove all the old packing (FIPG) material from the gasket surfaces and sealing groove.
- Thoroughly clean all components to remove all the loose material.
- Using a non–residue solvent, clean both sealing surfaces.

(b) Apply seal packing to the groove of the bypass pipe.
Seal packing:
Part No. 08826 – 00100 or equivalent
- Install a nozzle that has been cut to a 2 – 3 mm (0.08 – 0.12 in.) opening.

HINT: Avoid applying an excessive amount to the surface.
- Parts must be assembled within 5 minutes of application. Otherwise the material must be removed and reapplied.
- Immediately remove nozzle from the tube and reinstall cap.

(c) Install the bypass pipe with the 2 bolts and nut.
Torque: 8.5 N·m (85 kgf·cm, 75 in.·lbf)

(d) Connect the 2 knock sensor connectors.

14. INSTALL CYLINDER HEADS
(See steps 1, 3 to 20 and 22 in cylinder heads installation)

15. INSTALL PULLEYS AND TIMING BELT
(See steps 1 to 17 in timing belt installation)

16. REMOVE ENGINE STAND

17. INSTALL REAR END PLATE
Torque: 7.5 N·m (75 kgf·cm, 66 in.·lbf)

18. A/T:
INSTALL DRIVE PLATE

(a) Apply adhesive to 2 or 3 threads of the mount bolt end.
Adhesive: Part No. 08833 – 00070, THREE BOND 1324 or equivalent

(b) Install the front spacer, drive plate and rear spacer on the crankshaft.

(c) Install and uniformly tighten the 8 mount bolts in several passes, in the sequence shown.
Torque: 83 N·m (850 kgf·cm, 61 ft·lbf)

19. M/T:
INSTALL FLYWHEEL (See procedure step 18)
Torque: 85 N·m (850 kgf·cm, 63 ft·lbf)

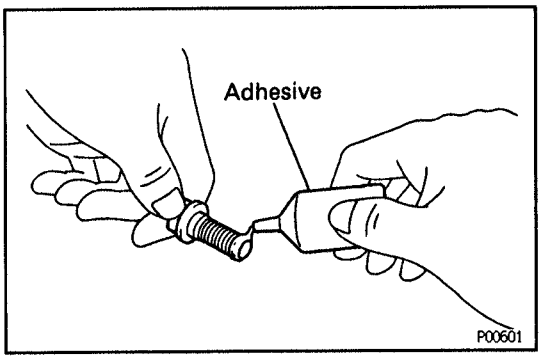

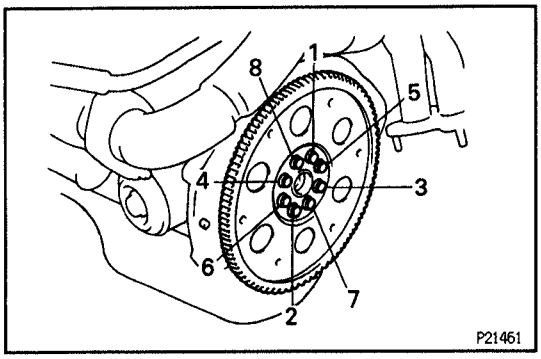

ENGINE AND TRANSMISSION ASSEMBLY (2WD)

EG3LY-04

(See MT and AT section)

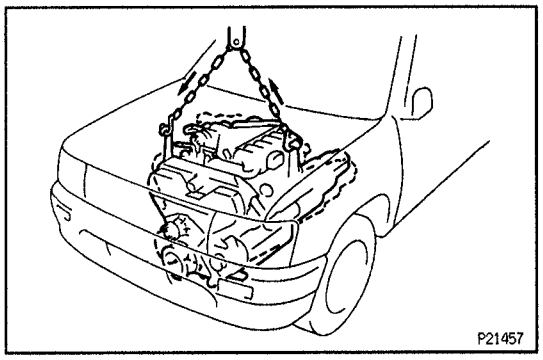

ENGINE WITH TRANSMISSION INSTALLATION (2WD)

EG5YR-01

EG

1. INSTALL ENGINE AND TRANSMISSION ASSEMBLY IN VEHICLE

(a) Attach the engine hoist chain to the engine hangers.

(b) Lower the engine and transmission assembly into the engine compartment.

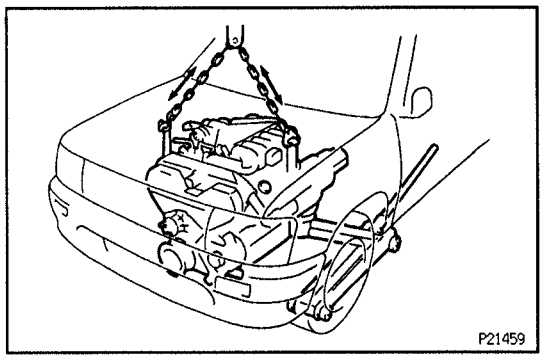

(c) Keep the engine level, and align the RH and LH mountings and body mountings.

(d) Attach the RH and LH mounting insulators to the body mountings, and temporarily install the 4 bolts and nuts.

(e) Jack up and put the transmission onto the frame.

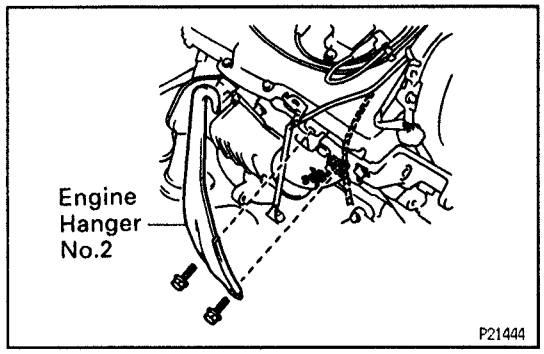

(f) Remove the engine chain hoist from the engine.

(g) Remove the 2 bolts and engine hanger No.2.

(h) w/ A/C:
Install the bolt, and connect the A/C compressor wire.

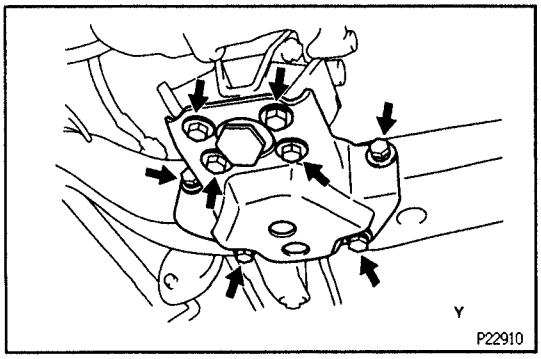

2. INSTALL ENGINE REAR MOUNTING BRACKET

(a) Raise the transmission slightly by raising the engine with a jack and a wooden block under the transmission.

(b) Install the engine rear mounting bracket to the frame.
Torque: 58 N·m (590 kgf·cm, 43 ft·lbf)

(c) Lower the transmission and rest it on the extension housing.

(d) Install the mounting bracket to the mounting insulator.
Torque: 18 N·m (183 kgf·cm, 13 ft·lbf)

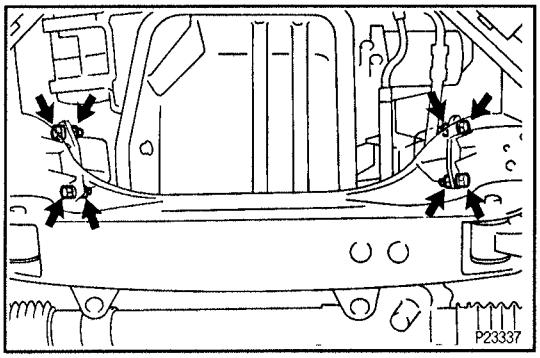

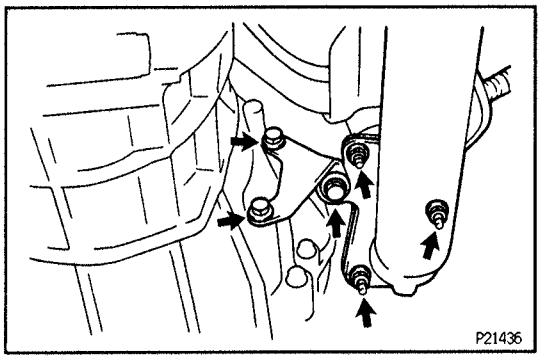

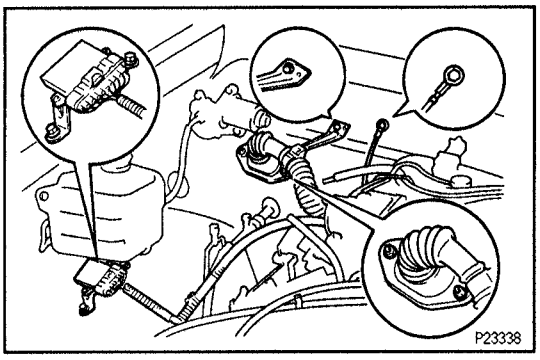

3. TIGHTEN RH AND LH ENGINE MOUNTING INSULATOR BOLTS AND NUTS

Tighten the 4 bolts and nuts holding the mounting insulators to the body mountings.

Torque: 38 N·m (387 kgf·cm, 28 ft·lbf)

4. A/T:

INSTALL CONROL CABLE

(a) Install the cable bracket with 2 bolts.

(b) Install the cable with the nut.

5. M/T:

INSTALL CLUTCH RELEASE CYLINDER

Install the clutch release cylinder with the 2 bolts.

Torque: 12 N·m (120 kgf·cm, 9 ft·lbf)

6. INSTALL FRONT EXHAUST PIPE

(a) Install 2 new gaskets and the front exhaust pipe assembly with new 3 nuts.

Torque: 62 N·m (630 kgf·cm, 46 ft·lbf)

(b) Install the support bracket with the 3 bolts.

Torque: 44 N·m (450 kgf·cm, 33 ft·lbf)

(c) Connect a new gasket and the front exhaust pipe assembly to the center exhaust pipe with the 2 bolts and retainer.

Torque: 48 N·m (490 kgf·cm, 35 ft·lbf)

(d) Connect the 2 heated oxygen sensor connectors.

7. CONNECT SPEEDOMETER CABLE

8. INSTALL PROPELLER SHAFT

(See propeller shaft installation in Propeller Shaft)

9. M/T:

INSTALL SHIFT LEVER ASSEMBLY

(a) Install a new gasket and shift lever assembly with the 6 bolts.

(b) Install the shift lever boot with the 4 screws.

(c) Install the shift lever knob.

10. CONNECT ENGINE WIRE AND CONNECTORS

(a) Push in the engine wire through the cowl panel.

(b) Install the bolt and 2 nuts.

(c) Connect these wire and connectors:

- Ground strap
- Igniter connector

(d) M/T:

Connect 3 connectors to the ECM.

(e) A/T:

Connect 4 connectors to the ECM.

(f) Install the ECM with the 2 bolts.

11. INSTALL GLOVE COMPARTMENT DOOR AND LOWER NO.2 FINISH PANEL

12. CONNECT GENERATOR WIRE

(See generator installation in Charging System)

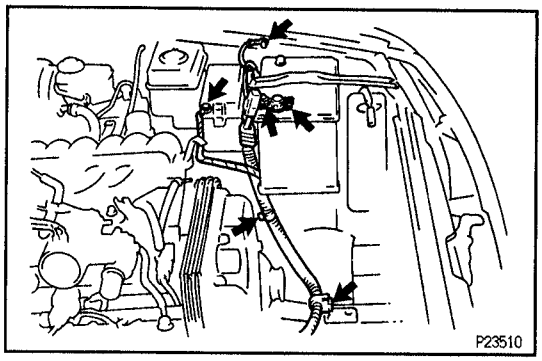

13. CONNECT STARTER WIRE AND CONNECTOR

(a) Connect the 2 starter wire clamps and connector.
(b) Install the 2 nuts, and connect the positive (+) terminal cable to battery.
(c) Install the bolt, and connect the ground strap.
(d) Install the nut, and disconnect wire from Relay Block No.2.

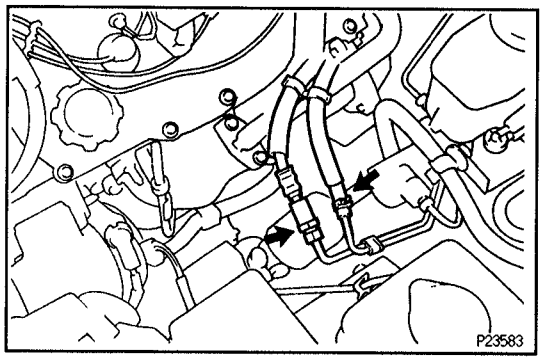

14. CONNECT HOSES

Connect these hoses:

- Fuel return hose
- Fuel inlet hose

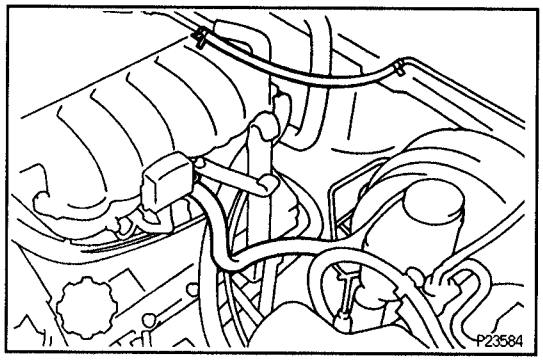

- Brake booster vacuum hose
- EVAP hose

15. CONNECT HEATER HOSES

(See steps 22 to 25 in cylinder heads installation)

16. INSTALL FAN WITH FLUID COUPLING AND FAN PULLEYS

(See steps 17 to 24 in timing belt installation)

17. INSTALL RADIATOR ASSEMBLY

(See radiator installation in Cooling System)

18. FILL WITH ENGINE OIL AND COOLANT

19. FILL TRANSMISSION OIL

20. START ENGINE AND CHECK FOR LEAKS

21. CHECK IGNITION TIMING

(See ignition timing inspection)

22. INSTALL ENGINE UNDER COVER

23. INSTALL HOOD

24. ROAD TEST VEHICLE

Check for abnormal noise, shock, slippage, correct shift points and smooth operation.

25. RECHECK ENGINE COOLANT AND OIL LEVELS

ENGINE INSTALLATION (4WD) EG5YS-01

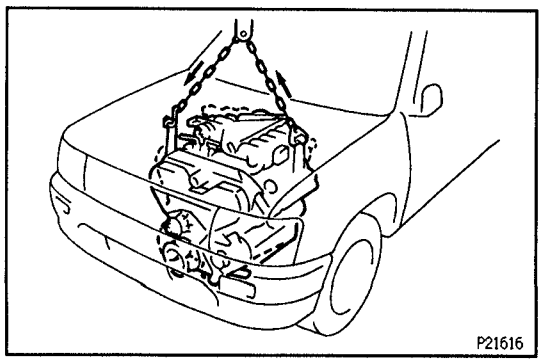

1. INSTALL ENGINE ASSEMBLY IN VEHICLE

(a) Attach the engine hoist chain to the engine hangers.
(b) Lower the engine assembly into the engine compartment.

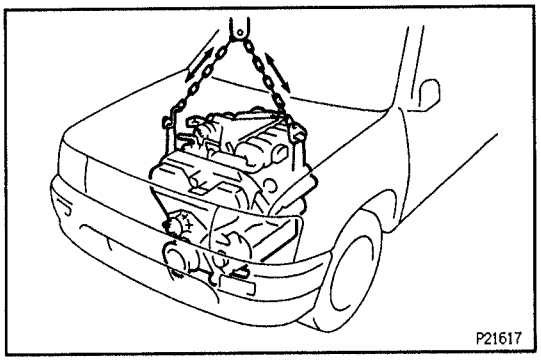

(c) Keep the engine level, and align the RH and LH mountings and body mountings.
(d) Attach the RH and LH mounting insulators to the body mountings, and temporarily install the 4 bolts and nuts.

EG

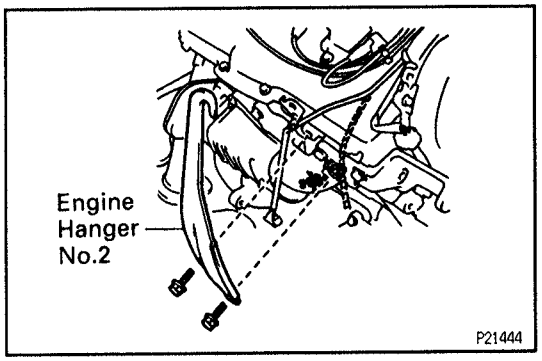

(e) Remove the engine chain hoist from the engine.
(f) Remove the 2 bolts and engine hanger No.2.
(g) w/ A/C:
Install the bolt, and connect the A/C compressor wire.

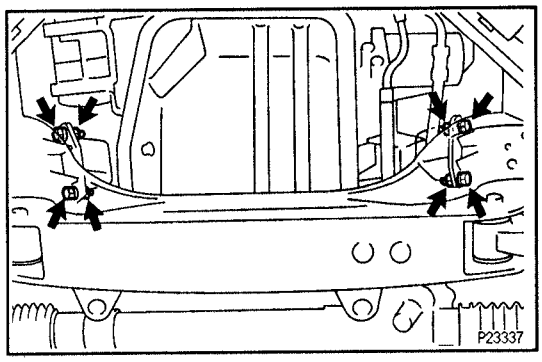

2. TIGHTEN RH AND LH ENGINE MOUNTING INSULATOR BOLTS AND NUTS
Tighten the 4 bolts and nuts holding the mounting insulators to the body mountings.
Torque: 38 N·m (387 kgf·cm, 28 ft·lbf)

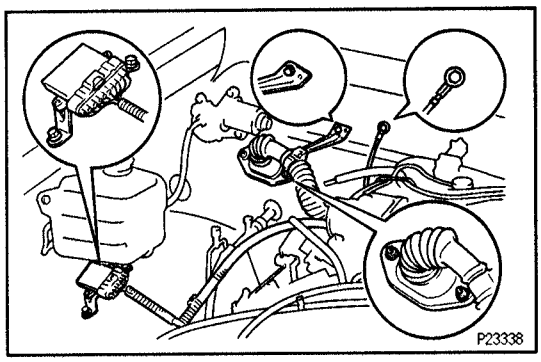

3. CONNECT ENGINE WIRE AND CONNECTORS
(a) Push in the engine wire through the cowl panel.
(b) Install the bolt and 2 nuts.
(c) Connect these wire and connectors:
- Ground strap
- Igniter connector

(d) M/T:
Connect 3 connectors to the ECM.
(e) A/T:
Connect 4 connectors to the ECM.
(f) Install the ECM with the 2 bolts.

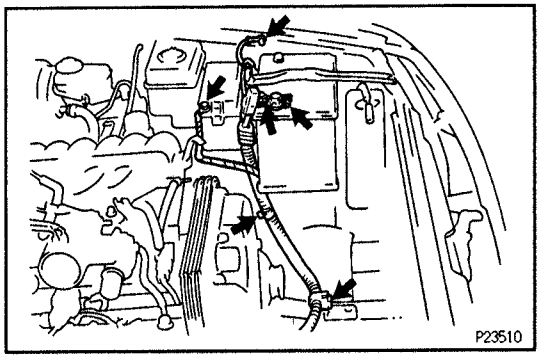

4. INSTALL GLOVE COMPARTMENT DOOR AND LOWER FINISH NO.2 FINISH PANEL.
5. CONNECT GENERATOR WIRE
(See generator installation in Charging System)
6. CONNECT STARTER WIRE AND CONNECTORS
(a) Connect the 3 starter wire clamps and connector.
(b) Install the 2 nuts, and connect the positive (+) terminal cable to battery.

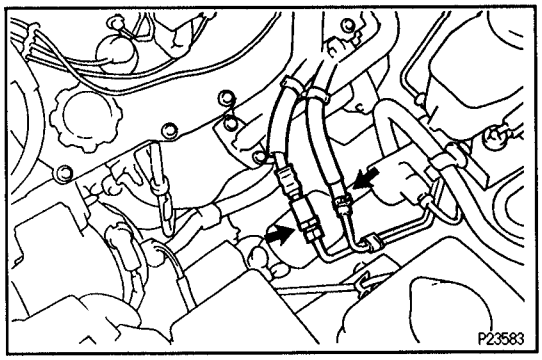

(c) Install the bolt, and connect the ground strap.
(d) Install the nut, and connect wire to Relay Block No.2.

7. CONNECT HOSES

Connect these hoses:

- Fuel return hose
- Fuel inlet hose

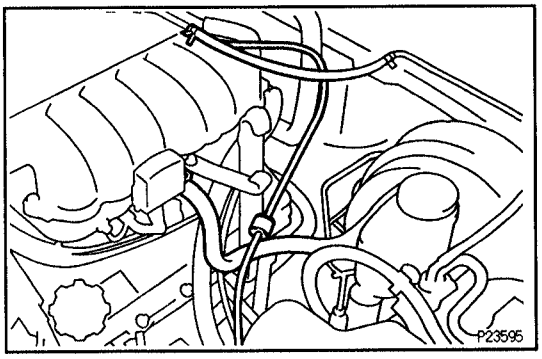

- Brake booster vacuum hose
- EVAP hose
- A.D.D. Vacuum hose

8. CONNECT HEATER HOSES

(See steps 22 to 24 in cylinder heads installation)

9. INSTALL FAN WITH FLUID COUPLING AND FAN PULLEYS

(See steps 17 to 24 in timing belt installation)

10. INSTALL AIR CLEANER CASE AND AIR FILTER

11. INSTALL RADIATOR ASSEMBLY

(See radiator installation in Cooling System)

12. FILL WITH ENGINE OIL

13. FILL WITH ENGINE COOLANT

14. INSTALL ENGINE UNDER COVER

TRANSMISSION INSTALLATION (4WD) EG5VT-01

(See MT and AT section)

EXHAUST SYSTEM

EG9GG-04

2WD

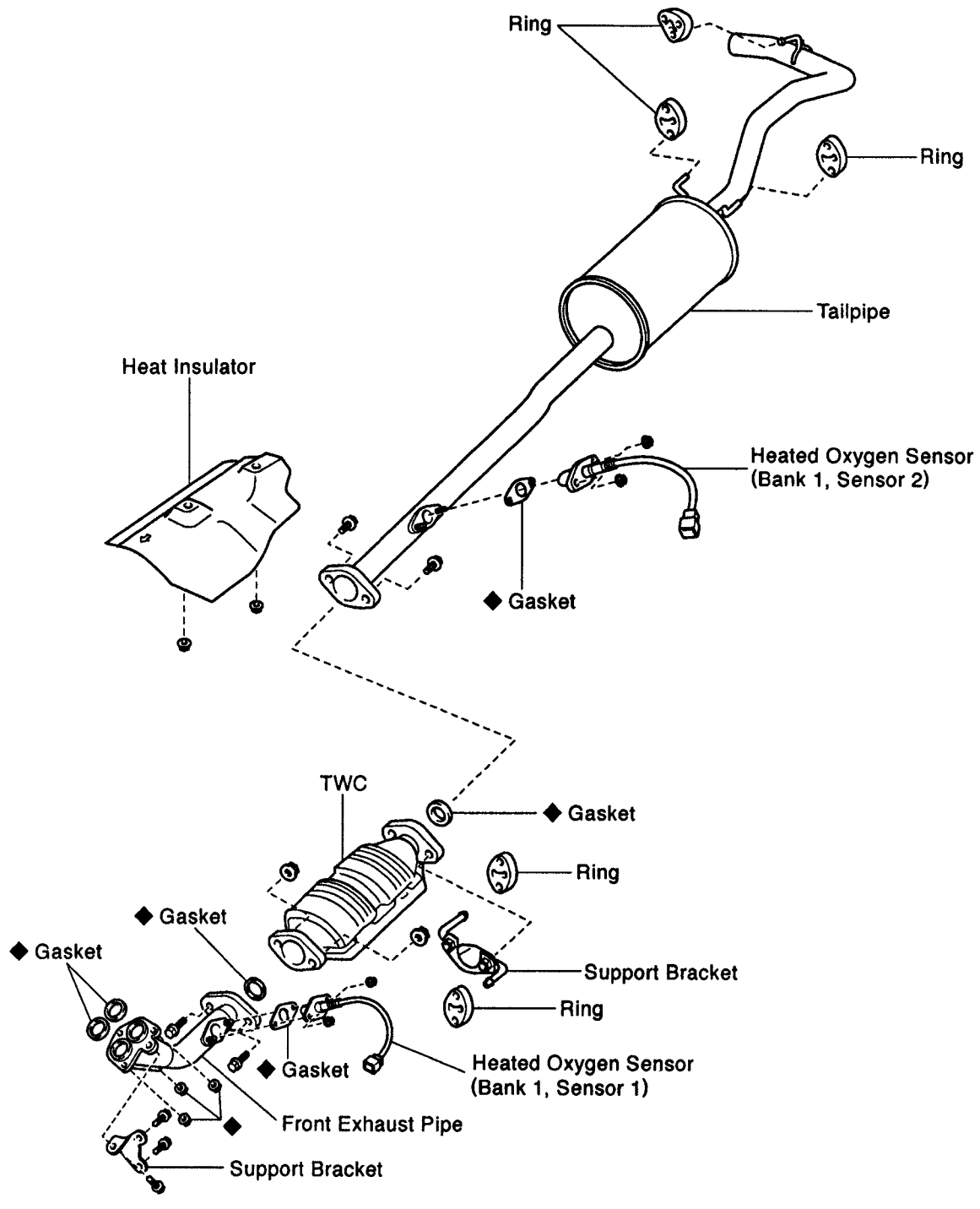

◆ Non-reusable part

P23943

4WD

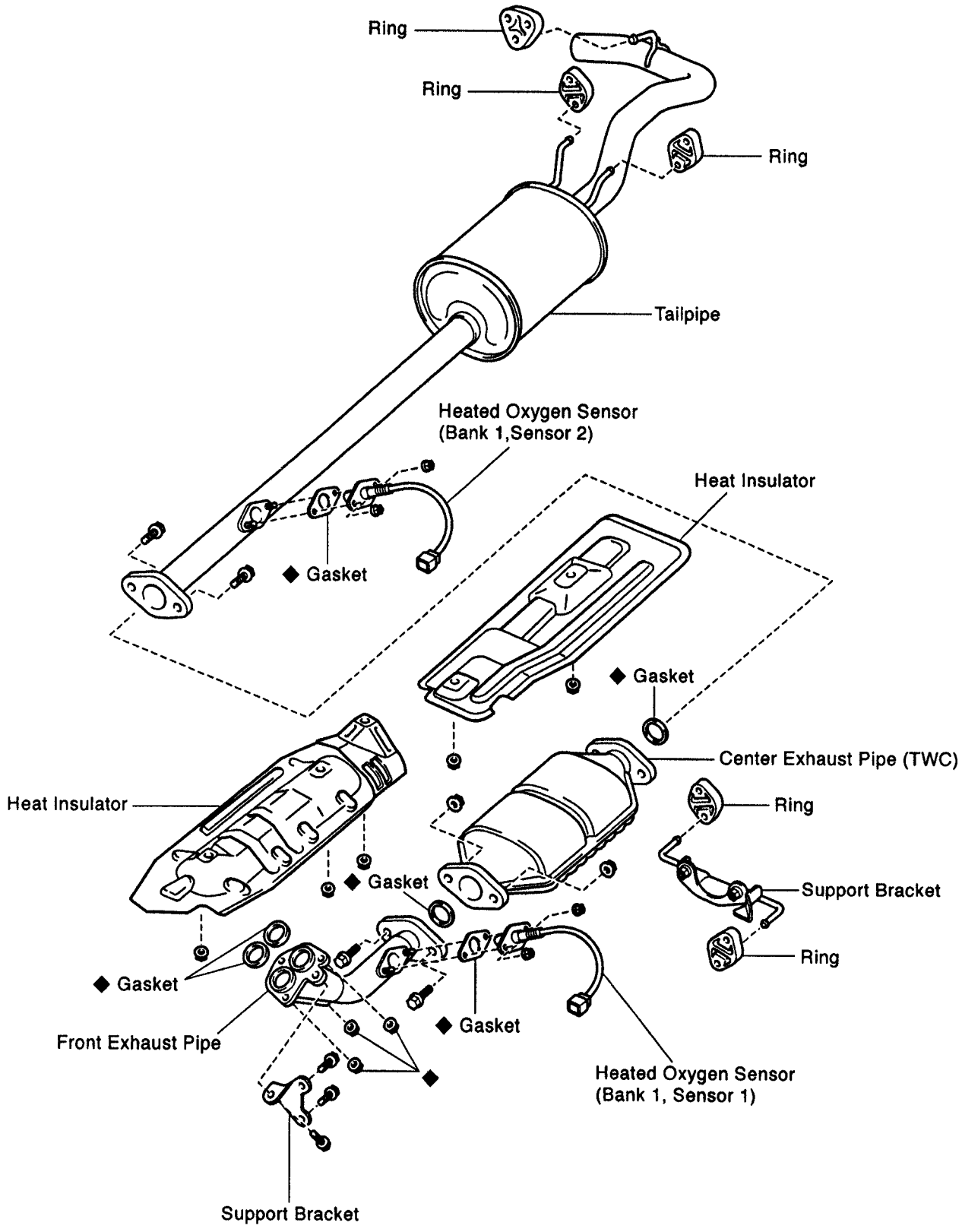

◆ Non-reusable part

P23944

SERVICE SPECIFICATIONS

SERVICE DATA

EGOPW-OR

Compression pressure		at 250 rpm STD	1,200 kPa (12.2 kgf/cm², 174 psi) or more
		Minimum	1,000 kPa (10.2 kgf/cm², 145 psi)
	Difference of pressure between each cylinder		100 kPa (1.0 kgf/cm², 15 psi) or less
Valve clearance		at cold Intake	0.13 – 0.23 mm (0.006 – 0.009 in.)
		Exhaust	0.27 – 0.37 mm (0.011 – 0.014 in.)
	Adjusting shim for repair part	Mark 2.500	2.500 mm (0.0984 in.)
		Mark 2.550	2.550 mm (0.1004 in.)
		Mark 2.600	2.600 mm (0.1024 in.)
		Mark 2.650	2.650 mm (0.1043 in.)
		Mark 2.700	2.700 mm (0.1063 in.)
		Mark 2.750	2.750 mm (0.1083 in.)
		Mark 2.800	2.800 mm (0.1102 in.)
		Mark 2.850	2.850 mm (0.1122 in.)
		Mark 2.900	2.900 mm (0.1142 in.)
		Mark 2.950	2.950 mm (0.1161 in.)
		Mark 3.000	3.000 mm (0.1181 in.)
		Mark 3.050	3.050 mm (0.1201 in.)
		Mark 3.100	3.100 mm (0.1220 in.)
		Mark 3.150	3.150 mm (0.1240 in.)
		Mark 3.200	3.200 mm (0.1260 in.)
		Mark 3.250	3.250 mm (0.1280 in.)
		Mark 3.300	3.300 mm (0.1299 in.)
Ignition timing	w/ Terminals TE1 and E1 connected of DLC1		8 – 12° BTDC @ idle
Idle speed	–		700 ± 50 rpm
Intake manifold vacuum		at idle speed	60 kPa (450 mmHg, 17.7 in.Hg) or more
Timing belt tensioner	Protrusion from housing side		10.0 – 10.8 mm (0.394 – 0.425 in.)
Cylinder head	Warpage	Maximum	0.10 mm (0.039 in.)
	Valve seat		
	Refacing angle		30°, 45°, 60°
	Contacting angle		45°
	Contacting width		1.0 – 1.4 mm (0.039 – 0.055 in.)
	Valve guide bushing bore diameter	STD	10.985 – 11.027 mm (0.4325 – 0.4341 in.)
		O/S 0.05	11.050 – 11.077 mm (0.4350 – 0.4361 in.)
Valve guide bushing	Inside diameter		6.010 – 6.030 mm (0.2366 – 0.2374 in.)
	Outside diameter for repair part	STD	11.033 – 11.044 mm (0.4344 – 0.4348 in.)
		O/S 0.05	11.083 – 11.094 mm (0.4363 – 0.4368 in.)

Valve	Valve overall length	STD Intake	95.15 mm (3.7461 in.)
		Exhaust	94.90 mm (3.7362 in.)
		Minimum Intake	94.60 mm (3.7244 in.)
		Exhaust	94.40 mm (3.7165 in.)
	Valve face angle		44.5°
	Stem diameter	Intake	5.970 – 5.985 mm (0.2350 – 0.2356 in.)
		Exhaust	5.965 – 5.980 mm (0.2348 – 0.2354 in.)
	Stem oil clearance	STD Intake	0.025 – 0.060 mm (0.0010 – 0.0024 in.)
		Exhaust	0.030 – 0.065 mm (0.0012 – 0.0026 in.)
		Maximum Intake	0.08 mm (0.0031 in.)
		Exhaust	0.10 mm (0.0039 in.)
	Margin thickness	STD	1.0 mm (0.039 in.)
		Minimum	0.5 mm (0.020 in.)
Valve spring	Deviation	Maximum	2.0 mm (0.079 in.)
	Free length		44.78 mm (1.7630 in.)
	Installed tension	at 33.3 mm (1.311 in.)	186 – 206 N (19.0 – 21.0 kgf, 41.9 – 46.3 lbf)
Valve lifter	Lifter diameter		30.966 – 30.976 mm (1.2191 – 2.2195 in.)
	Lifter bore diameter		31.000 – 31.018 mm (1.2205 – 1.2212 in.)
	Oil clearance	STD	0.024 – 0.052 mm (0.0009 – 0.0020 in.)
		Maximum	0.08 mm (0.0031 in.)
Camshaft	Thrust clearance	STD	0.033 – 0.080 mm (0.0013 – 0.0031 in.)
		Maximum	0.12 mm (0.0047 in.)
	Journal oil clearance	STD	0.035 – 0.072 mm (0.0014 – 0.0028 in.)
		Maximum	0.10 mm (0.0039 in.)
	Journal diameter		26.949 – 26.965 mm (1.0610 – 1.0616 in.)
	Circle runout	Maximum	0.06 mm (0.0024 in.)
	Cam lobe height	STD Intake	42.31 – 42.41 mm (1.6657 – 1.6697 in.)
		Exhaust	41.96 – 42.06 mm (1.6520 – 1.6559 in.)
		Minimum Intake	42.16 mm (1.6598 in.)
		Exhaust	41.81 mm (1.6461 in.)
	Camshaft gear backlash	STD	0.020 – 0.200 mm (0.0008 – 0.0079 in.)
		Maximum	0.30 mm (0.0188 in.)
	Camshaft gear spring end free distance		18.2 – 18.8 mm (0.712 – 0.740 in.)
Air intake chamber	Warpage	Maximum	0.10 mm (0.0039 in.)
Intake air connector	Warpage	Maximum	0.10 mm (0.0039 in.)
Intake manifold	Warpage	Maximum	0.10 mm (0.0039 in.)
Exhaust manifold	Warpage	Maximum	1.00 mm (0.0394 in.)
Cylinder block	Cylinder head surface warpage	Maximum	0.05 mm (0.0020 in.)
	Cylinder bore diameter	STD Mark 1	93.500 – 93.510 mm (3.6811 – 3.6815 in.)
		Mark 2	93.510 – 93.520 mm (3.6815 – 3.6819 in.)
		Mark 3	93.520 – 93.530 mm (3.6819 – 3.6823 in.)
		Maximum STD	93.730 mm (3.6902 in.)
		O/S 0.50	94.230 mm (3.7098 in.)

Piston and piston ring	Piston diameter	STD	Mark 1	93.356 – 93.366 mm (3.6754 – 3.6758 in.)
			Mark 2	93.367 – 93.376 mm (3.6759 – 3.6762 in.)
			Mark 3	93.377 – 93.386 mm (3.6763 – 3.6766 in.)
			O/S 0.50	93.856 – 93.886 mm (3.6951 – 3.6963 in.)
	Piston oil clearance		STD	0.134 – 0.154 mm (0.0053 – 0.0060 in.)
			Maximum	0.174 mm (0.0069 in.)
	Piston ring groove clearance		No.1	0.040 – 0.080 mm (0.0016 – 0.0031 in.)
			No.2	0.030 – 0.070 mm (0.0012 – 0.0028 in.)
	Piston ring end gap	STD	No.1	0.300 – 0.500 mm (0.0118 – 0.0197 in.)
			No.2	0.400 – 0.600 mm (0.0157 – 0.0236 in.)
			Oil	0.150 – 0.550 mm (0.0059 – 0.0217 in.)
		Maximum	No.1	1.100 mm (0.0433 in.)
			No.2	1.200 mm (0.0472 in.)
			Oil	1.150 mm (0.0453 in.)
Connecting rod	Thrust clearance		STD	0.150 – 0.330 mm (0.0059 – 0.0130 in.)
			Maximum	0.380 mm (0.0150 in.)
	Connecting rod bearing center wall thickness			
	Reference		Mark 1	1.484 – 1.488 mm (0.0584 – 0.0586 in.)
			Mark 2	1.488 – 1.492 mm (0.0586 – 0.0587 in.)
			Mark 3	1.492 – 1.496 mm (0.0587 – 0.0589 in.)
	Connecting rod oil clearance		STD	0.024 – 0.053 mm (0.0009 – 0.0021 in.)
			O/S 0.25	0.023 – 0.069 mm (0.0009 – 0.0027 in.)
			Maximum	0.08 mm (0.0031 in.)
	Rod bend	Maximum	per 100 mm (3.94 in.)	0.05 mm (0.0020 in.)
	Rod twist	Maximum	per 100 mm (3.94 in.)	0.15 mm (0.0059 in.)
	Bushing inside diameter			22.005 – 22.017 mm (0.8663 – 0.8668 in.)
	Piston pin diameter			21.997 – 22.009 mm (0.8660 – 0.8665 in.)
	Bushing oil clearance		STD	0.005 – 0.011 mm (0.0002 – 0.0004 in)
			Maximum	0.05 mm (0.0020 in.)
	Connecting rod bolt outer diameter		STD	7.860 – 8.000 mm (0.3094 – 0.3150 in.)
			Minimum	7.600 mm (0.2992 in.)

Crankshaft	Thrust clearance		STD	0.020 – 0.220 mm (0.0008 – 0.0087 in.)
			Maximum	0.300 mm (0.0118 in.)
	Thrust washer thickness			2.440 – 2.490 mm (0.0961 – 0.0980 in.)
	Main journal oil clearance	No.1	STD	0.020 – 0.038 mm (0.0008 – 0.0015 in.)
			U/S 0.25	0.019 – 0.059 mm (0.0007 – 0.0023 in.)
		Others	STD	0.024 – 0.042 mm (0.0009 – 0.0017 in.)
			U/S 0.25	0.023 – 0.063 mm (0.0009 – 0.0025 in.)
			Maximum	0.08 mm (0.0031 in.)
	Main journal diameter		STD	63.985 – 64.000 mm (2.5191 – 2.5197 in.)
			U/S 0.25	63.745 – 63.755 mm (2.5096 – 2.5100 in.)
	Main bearing center wall thickness			
	Reference	No.1	Mark 1	1.991 – 1.994 mm (0.0784 – 0.0785 in.)
			Mark 2	1.994 – 1.997 mm (0.0785 – 0.0786 in.)
			Mark 3	1.997 – 2.000 mm (0.0786 – 0.0787 in.)
			Mark 4	2.000 – 2.003 mm (0.0787 – 0.0789 in.)
			Mark 5	2.003 – 2.006 mm (0.0789 – 0.0790 in.)
		Others	Mark 1	1.989 – 1.992 mm (0.0783 – 0.0784 in.)
			Mark 2	1.992 – 1.995 mm (0.0784 – 0.0785 in.)
			Mark 3	1.995 – 1.998 mm (0.0785 – 0.0787 in.)
			Mark 4	1.998 – 2.001 mm (0.0787 – 0.0788 in.)
			Mark 5	2.001 – 2.004 mm (0.0788 – 0.0789 in.)
	Crank pin diameter		STD	54.987 – 55.000 mm (2.1648 – 2.1654 in.)
			U/S 0.25	54.745 – 54.755 mm (2.1553 – 2.1557 in.)
	Circle runout		Maximum	0.06 mm (0.0024 in.)
	Main journal taper and out–of–round		Maximum	0.02 mm (0.0008 in.)
	Crank pin taper and out–of–round		Maximum	0.02 mm (0.0008 in.)

EG

EG0FQ-06

TORQUE SPECIFICATIONS

Part tightened		N·m	kgf·cm	ft·lbf
No.1 idler pulley x Oil pump		35	350	26
No.2 idler pulley x No.2 idler pulley bracket		40	400	30
No.1 timing belt cover x Oil pump		9	90	80 in.·lbf
Crankshaft pulley x Crankshaft		250	2,500	184
Camshaft timing pulley x Camshaft		110	1,100	81
Timing belt tensioner x Oil pump		27	270	20
No.2 timing belt cover x No.3 timing belt cover		9	90	80 in.·lbf
Oil dipstick guide x Generator bracket		8	80	71 in.·lbf
Fluid coupling x Fan bracket		5.4	54	48 in.·lbf
Camshaft bearing cap x Cylinder head		16	160	12
Cylinder head rear plate x Cylinder head		8	80	71 in.·lbf
Cylinder head x Cylinder block	12 pointed head 1st	34	350	25
	2nd	Turn 90°	Turn 90°	Turn 90°
	3rd	Turn 90°	Turn 90°	Turn 90°
	Recessed head	18	185	13
Cylinder head cover x Cylinder head		6	60	53 in.·lbf
Exhaust manifold x Cylinder head		40	400	30
Exhaust manifold heat insulator x Exhaust manifold		8	80	71 in.·lbf
Exhaust crossover pipe x Exhaust manifold		45	450	33
Generator bracket x LH cylinder head		18.5	185	14
PS pump bracket x RH cylinder head		18.5	185	14
Intake manifold, Intake manifold stay x Cylinder head		18	180	13
No.3 timing belt cover x Cylinder head		9	90	80 in.·lbf
Camshaft position senser x RH cylinder head		8	80	71 in.·lbf
Intake air connector x Intake manifold		18	180	13
Air intake chamber x Intake air connector		18	180	13
Air intake chamber stay x LH cylinder head		40	400	30
EGR pipe x LH exhaust manifold, EGR valve		18.5	185	14
EGR pipe x Cylinder head		8	80	71 in.·lbf
Engine hanger No.2 x RH cylinder head		40	400	30
Connecting rod cap x Connecting rod	1st	25	250	18
	2nd	Turn 90°	Turn 90°	Turn 90°
Main bearing cap x Cylinder block	1st	61	625	45
	2nd	Turn 90°	Turn 90°	Turn 90°
Rear oil seal retainer x Cylinder block		8	80	71 in.·lbf
Oil cooler union x Cylinder block		30	300	22
Oil hole cover plate x Cylinder block		60	600	44
Engine coolant drain cock x Cylinder block		39	400	29
Engine mounting bracket x Cylinder block		44	440	32
Oil filter union x Cylinder block		25	250	18
Oil pressure switch x Cylinder block		15	150	11
Generator adjusting bar x Cylinder block		42	420	31
No.2 idler pulley bracket x Cylinder block		38	380	28
Water bypass pipe x Cylinder block		8.5	85	75 in.·lbf
Rear end plate x Cylinder block		7.5	75	66 in.·lbf
Drive plate, Flywheel x Crankshaft		83	850	61
Frame crossmember x Engine rear mounting bracket		58	590	43

Engine rear mounting bracket x Engine rear mounting insulator	18	183	13
Engine front mounting insulator x Frame	38	387	28
Clutch release cylinder x Transmission	12	120	9
Front pipe x Exhaust crossover pipe	48	490	35
Front exhaust pipe support bracket x Front pipe, Transmission	44	450	33

EMISSION CONTROL SYSTEMS

SYSTEM PURPOSE

EG4EY-06

The emission control systems are installed to reduce the amount of CO, HC and NOx exhausted from the engine ((3), (4) and (5)), to prevent the atmospheric release of blow-by gas-containing HC (1) and evaporated fuel containing HC being released from the fuel tank (2).

The function of each system is shown in these table.

System	Abbreviation	Function
(1) Positive Crankcase Ventilation	PCV	Reduces crankcase blow-by gas (HC)
(2) Evaporative Emission Control	EVAP	Reduces evaporated HC
(3) Exhaust Gas Recirculation	EGR	Reduces NOx
(4) Three-Way Catalytic Converter	TWC	Reduces CO, HC and NOx
(5) Sequential Multiport Fuel Injection *	SFI	Injects a precisely timed, optimum amount of fuel for reduced exhaust emissions

Remark: * For inspection and repair of the SFI system, refer to the SFI section of this manual.

PREPARATION

EG1MV-07

SST (SPECIAL SERVICE TOOL)

	09843-18020 Diagnosis Check Wire	

EG2DF-09

RECOMMENDED TOOLS

	09082-00050 TOYOTA Electrical Tester Set.	

EG2DG-0F

EQUIPMENT

OBD II scan tool	Engine speed
Torque wrench	
Vacuum gauge	

LAYOUT AND SCHEMATIC DRAWING

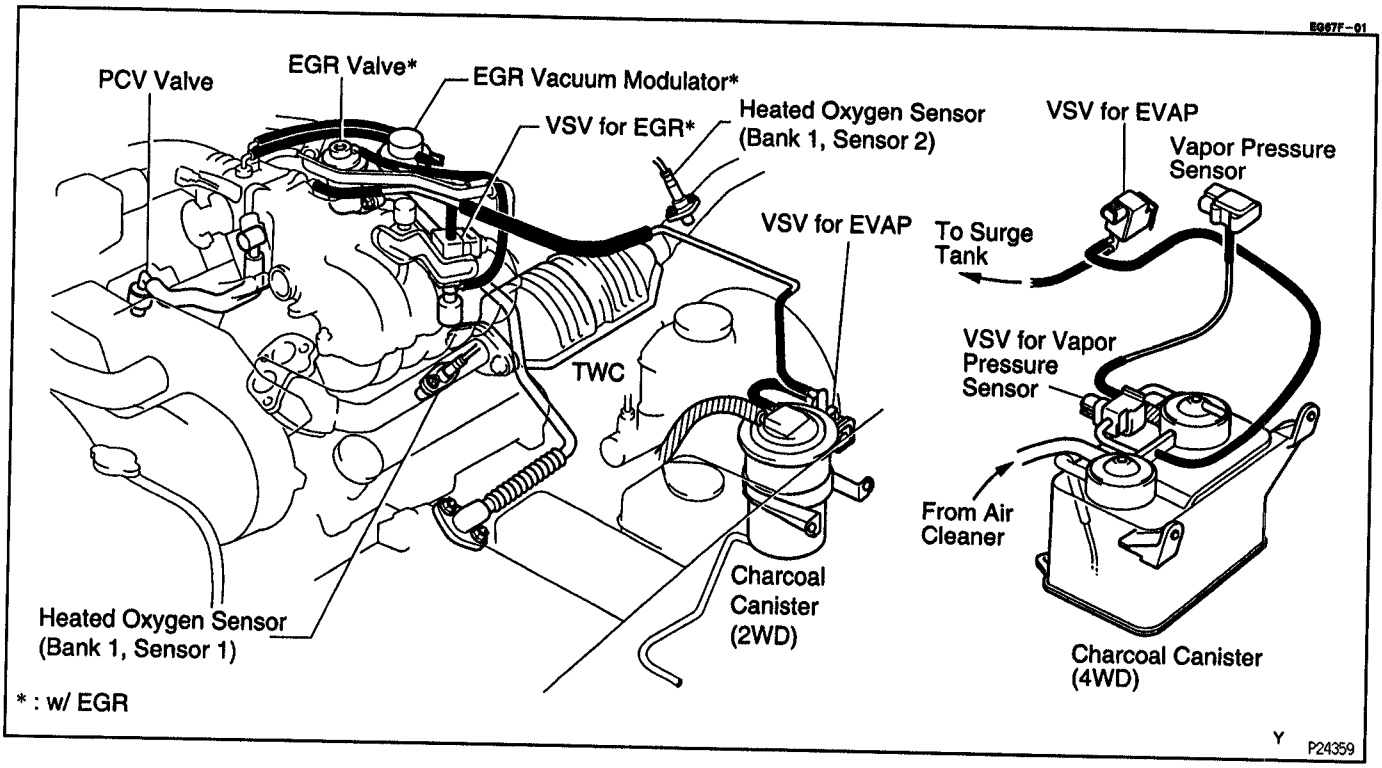

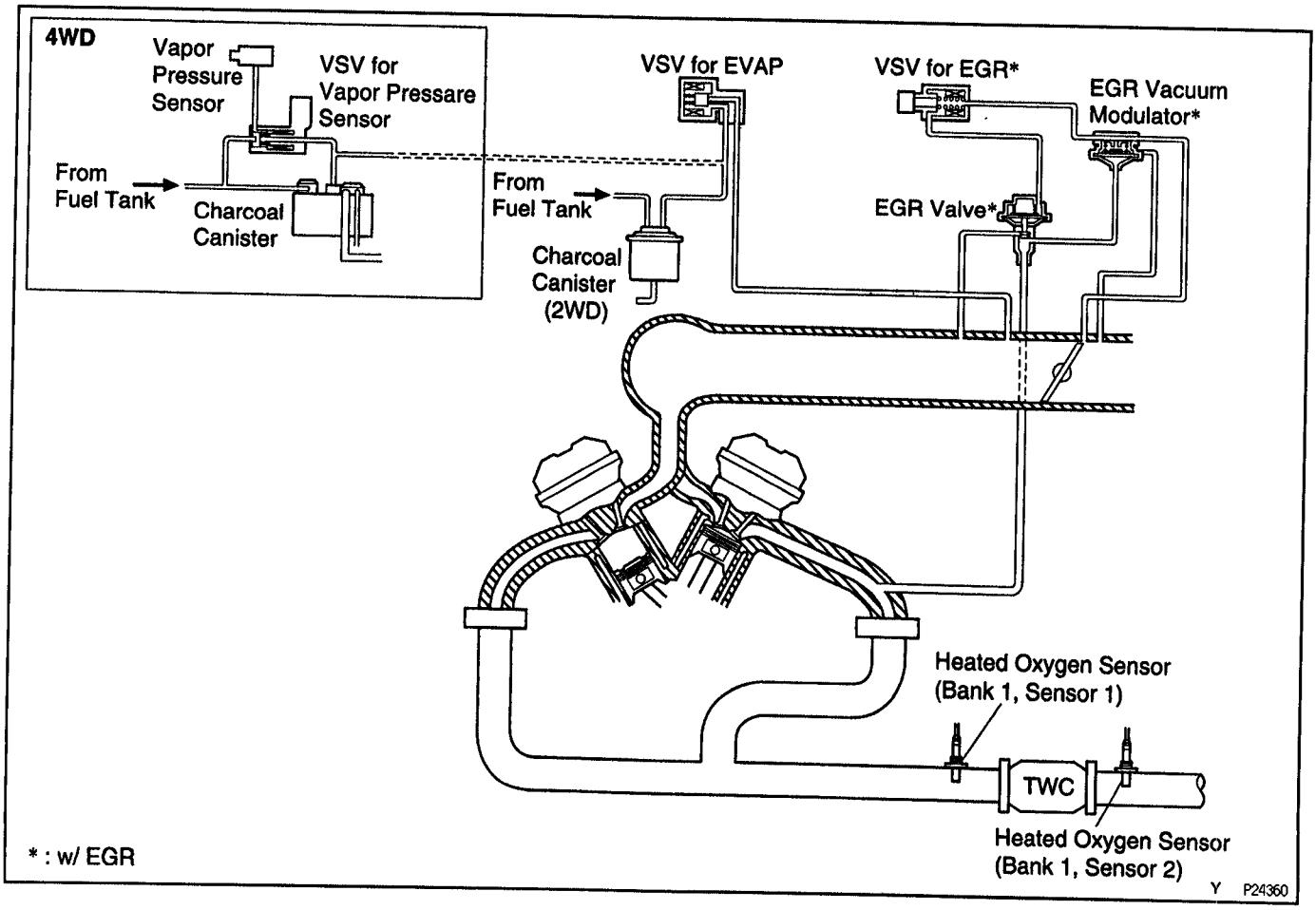

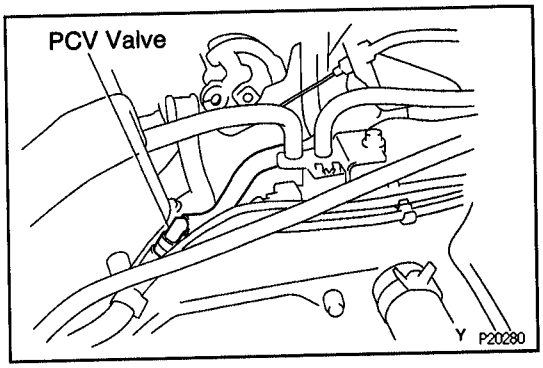

POSITIVE CRANKCASE VENTILATION (PCV) SYSTEM

EG9ER-02

PCV VALVE INSPECTION

1. **REMOVE PCV VALVE**

(a) Disconnect the PCV hose from the PCV valve.

(b) Remove the PCV valve.

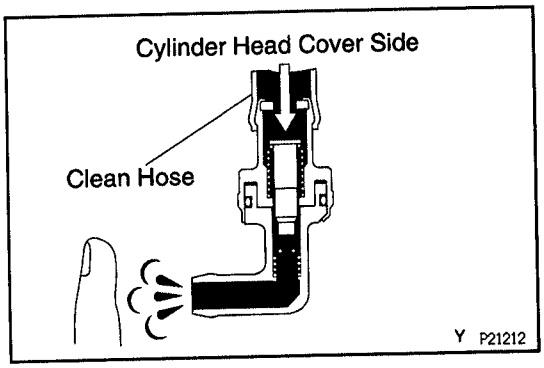

2. **INSTALL CLEAN HOSE TO PCV VALVE**
3. **INSPECT PCV VALVE OPERATION**

(a) Blow air into the cylinder head cover side, and check that air passes through easily.

CAUTION: Do not suck air through the valve. Petroleum substances inside the valve are harmful.

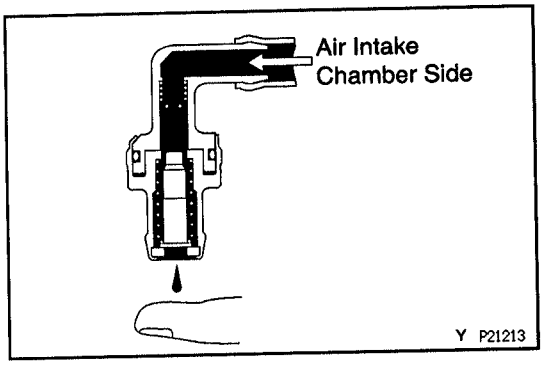

(b) Blow air into the air intake chamber side, and check that air passes through with difficulty.

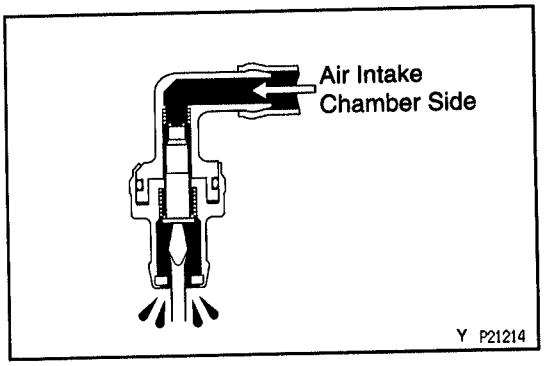

(c) Blow air into the air intake chamber side when lift up the inside valve, and check that there is a strong resistance to air flow.

If operation is not as specified, replace the PCV valve.

4. **REMOVE CLEAN HOSE FROM PCV VALVE**
5. **REINSTALL PCV VALVE**

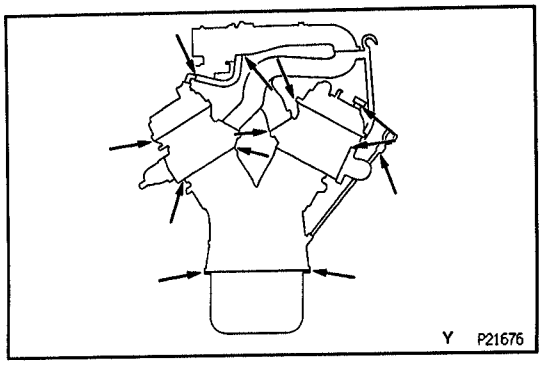

EG2DM-0A

PCV HOSES AND CONNECTORS INSPECTION

VISUALLY INSPECT HOSES, CONNECTIONS AND GASKETS

Check for cracks, leaks or damage.

EVAPORATIVE EMISSION (EVAP) CONTROL SYSTEM

FUEL VAPOR LINES, FUEL TANK AND TANK CAP INSPECTION

E044T-05

1. **VISUALLY INSPECT LINES AND CONNECTIONS**
   Look for loose connections, sharp bends or damage.
2. **VISUALLY INSPECT FUEL TANK**
   Look for deformation, cracks or fuel leakage.
3. **VISUALLY INSPECT FUEL TANK CAP**
   Check if the cap and/or gasket are deformed or damaged.
   If necessary, repair or replace the cap.

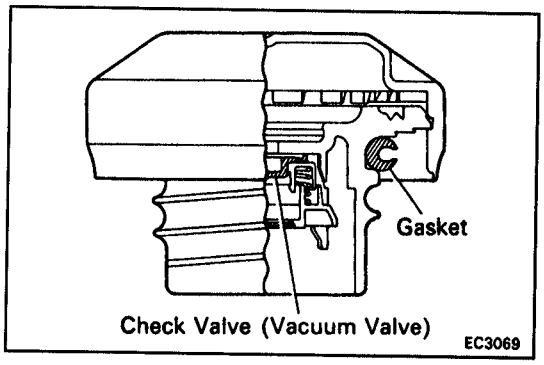

CHARCOAL CANISTER INSPECTION 4WD:

E067G-01

1. **REMOVE CHARCOAL CANISTER**
2. **REMOVE VSV**
3. **VISUALLY INSPECT CHARCOAL CANISTER**
   Look for cracks or damage.

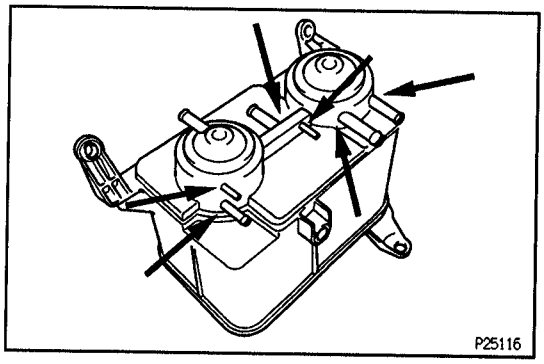

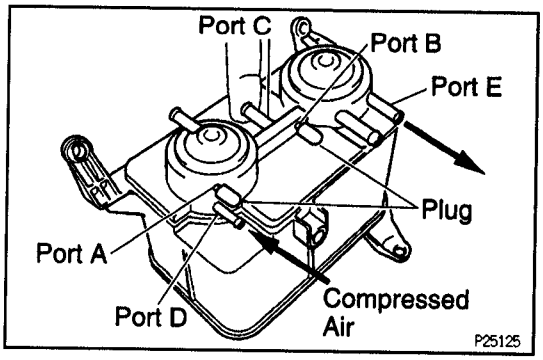

4. **CHECK FOR CLOGGED FILTER, AND STUCK CHECK VALVE AND DIAPHRAGM**
   (a) Install the plugs to ports A and B.
   (b) While holding port C closed, blow air (1.47 kPa, 15 gf/cm², 0.21 psi) into port D and check that air flows from port E.

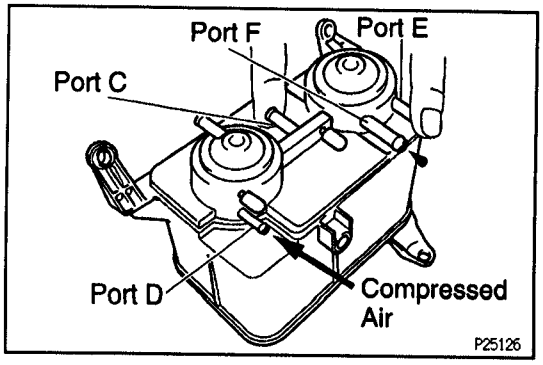

   (c) While holding port C and port E closed, blow air (1.47 kPa, 15 gf/cm², 0.21 psi) into port D and check that air does not flow from port F.

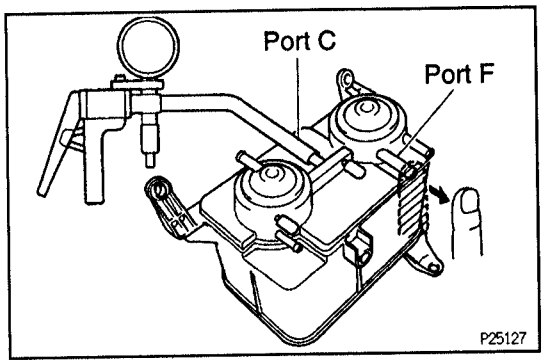

(d) Apply vacuum (2.94 kPa, 22 mmHg, 0.87 in.Hg) to port C, check that the vacuum does not decrease when port F is closed, and check that the vacuum decreases when port F is released.

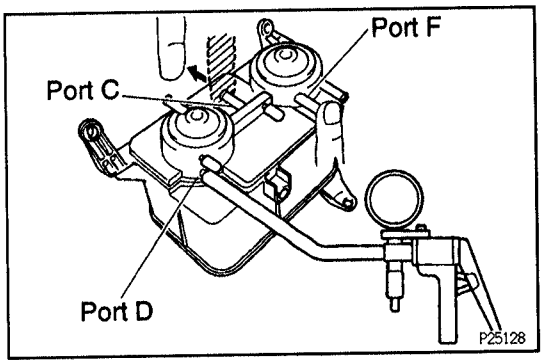

(e) While holding port F closed, apply vacuum (2.94 kPa 22 mmHg, 0.87 in. Hg) to port D, check that the vacuum does not decrease when port C is closed, and check that the vacuum decreases when port C is released.
If a problem is found, replace the charcoal canister.

(f) Remove the plugs.

5. REINSTALL CHARCOAL CANISTER

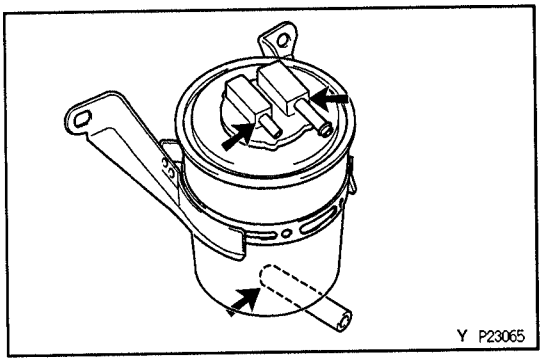

2WD:

1. REMOVE VSV
Remove the screw from the charcoal canister.

2. REMOVE CHARCOAL CANISTER

3. REMOVE CAP FROM CHARCOAL CANISTER

4. VISUALLY INSPECT CHARCOAL CANISTER
Lock for cracks or damage.

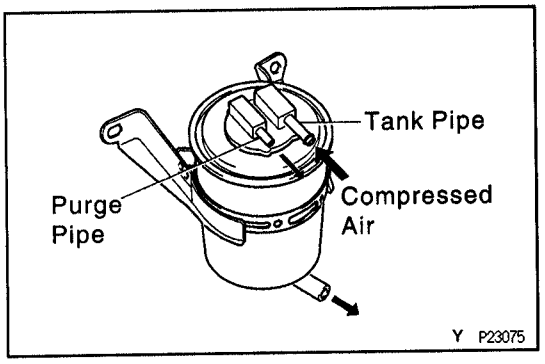

5. INSPECT FOR CLOGGED FILTER AND STUCK CHECK VALVE

(a) Using low pressure compressed air (4.71 kPa, 48 gf/cm², 0.68 psi), blow into tank pipe and check that air flows without resistance from the other pipes.

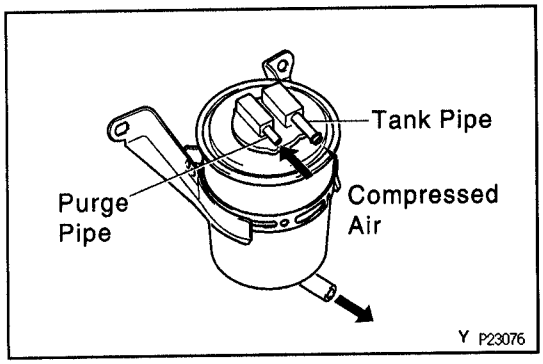

(b) Blow low pressure compressed air (4.71 kPa, 48 gf/cm², 0.68 psi) into purge pipe and check that air does not flow from the tank pipe. but flows without resistance from the other pipe.
If a problem is found, replace the charcoal canister.

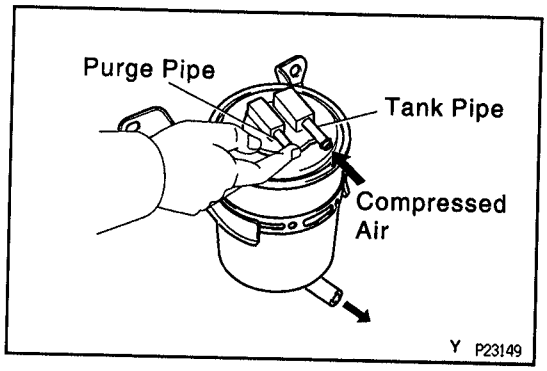

6. **CLEAN FILTER IN CANISTER**
   Clean the filter by blowing 294 kPa (3 kgf/cm², 43 psi) of compressed air into tank pipe while holding purge pipe closed.
   NOTICE:
   - **Do not attempt to wash the canister.**
   - **No activated carbon should come out.**
7. **REINSTALL CAP TO CHARCOAL CANISTER**
8. **RECONNECT CHARCOAL CANISTER**
   Torque: 31 N·m (310 kgf·cm, 23 ft·lbf)
9. **REINSTALL VSV**

EG

VSV for EVAP INSPECTION

EG67H–01

(See VSV for EVAP in SFI System)

VSV for VAPOR PRESSURE SENSOR INSPECTION (4WD only)

EG67J–01

(See VSV for vapor pressure sensor in SFI System)

VAPOR PRESSURE SENSOR INSPECTION (4WD only)

EG67K–01

(See vapor pressure sensor in SFI System)

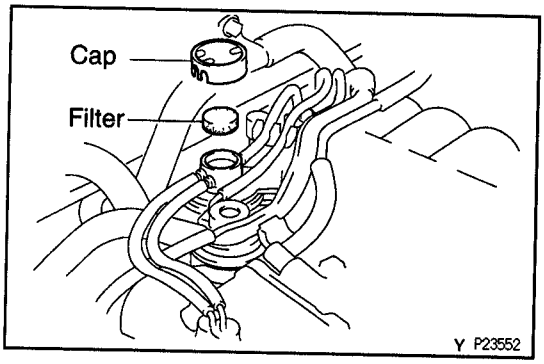

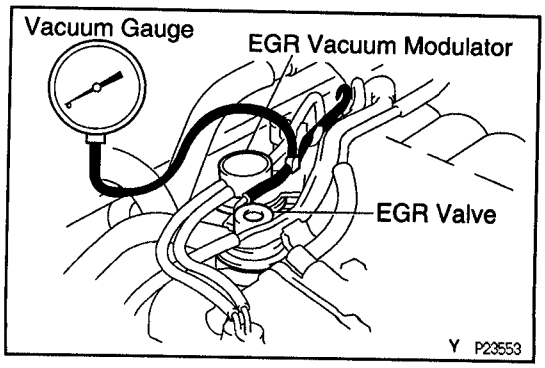

EXHAUST GAS RECIRCULATION (EGR) SYSTEM

(2WD and 4WD/B CAB)

EG5M8–02

EGR SYSTEM INSPECTION

1. **CHECK AND CLEAN FILTER IN EGR VACUUM MODULATOR**
   (a) Remove the cap and filter.
   (b) Check the filter for contamination or damage.
   (c) Using compressed air, clean the filter.
   (d) Reinstall the filter and cap.
   HINT: Install the filter with the coarser surface facing out to the atmospheric side.
2. **INSTALL VACUUM GAUGE**
   Using a 3–way connector, connect a vacuum gauge to the hose between the EGR valve and VSV.
3. **INSPECT SEATING OF EGR VALVE**
   Check that the engine starts and runs at idle.

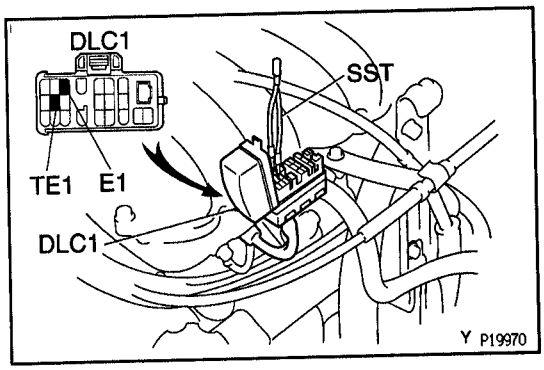

4. CONNECT TERMINALS TE1 AND E1

Using SST, connect terminals TE1 and E1 of the DLC1.

SST 09843–18020

EG

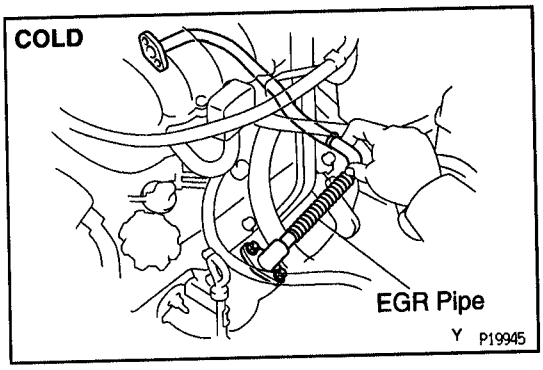

5. INSPECT VSV OPERATION WITH COLD ENGINE

(a) The engine coolant temperature should be below 45° C (113°F).

(b) Check that the vacuum gauge indicates zero at 2,800 rpm.

(c) Check that the EGR pipe is not hot.

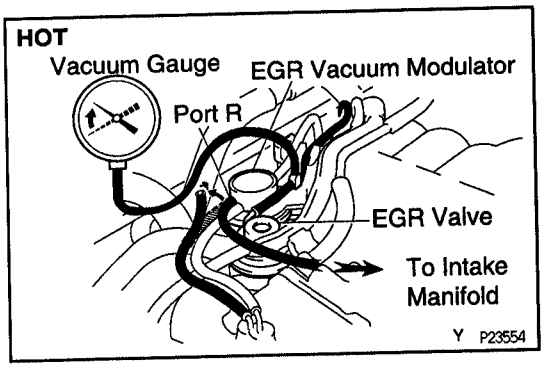

6. INSPECT OPERATION OF VSV AND EGR VACUUM MODULATOR WITH HOT ENGINE

(a) Warm up the engine to above 80°C (176°F).

(b) Check that the vacuum gauge indicates low vacuum at 2,800 rpm.

(c) Disconnect the vacuum hose from port R of the EGR vacuum modulator and connect port R directly to the intake manifold with another hose.

(d) Check that the vacuum gauge indicates high vacuum at 3,500 rpm.

HINT: As exhaust gas is increasingly recirculated, the engine will start to misfire.

7. DISCONNECT TERMINALS TE1 AND E1

Remove the SST from the DLC1.

SST 09843–18020

8. REMOVE VACUUM GAUGE

Remove the vacuum gauge, and reconnect the vacuum hoses to their proper locations.

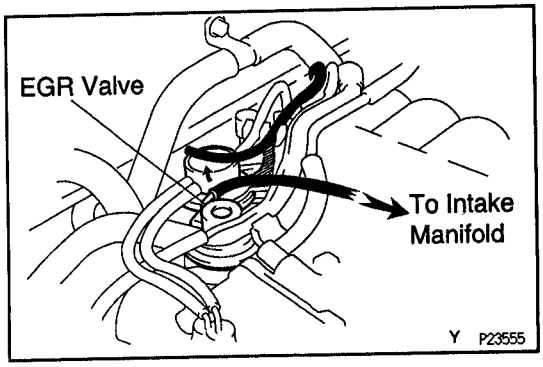

9. INSPECT EGR VALVE

(a) Apply vacuum directly to the EGR valve with the engine idle.

(b) Check that the engine runs rough or dies.

(c) Reconnect the vacuum hoses to their proper locations.

IF NO PROBLEM IS FOUND DURING THIS INSPECTION, SYSTEM IS NORMAL; OTHERWISE INSPECT EACH PART

VSV INSPECTION

EG30V–03

(See VSV for EGR in SFI System)

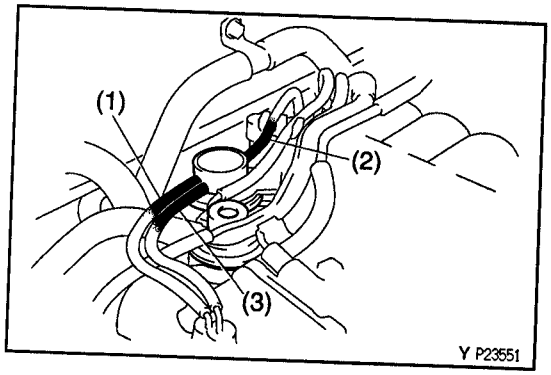

EGR VACUUM MODULATOR INSPECTION EG3Z6–05

EG

1. **DISCONNECT VACUUM HOSES FROM EGR VACUUM MODULATOR**

Disconnect these vacuum hoses:

(1) Vacuum hose from R port
(2) Vacuum hose from Q port
(3) Vacuum hose from P port

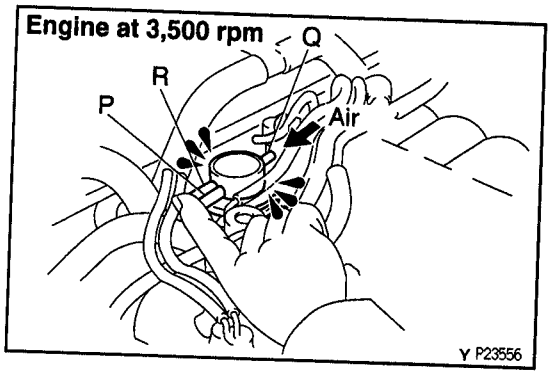

2. **INSPECT EGR VACUUM MODULATOR OPERATION**

(a) Block ports P and R with your finger.
(b) Blow air into port Q, and check that the air passes through to the air filter side freely.

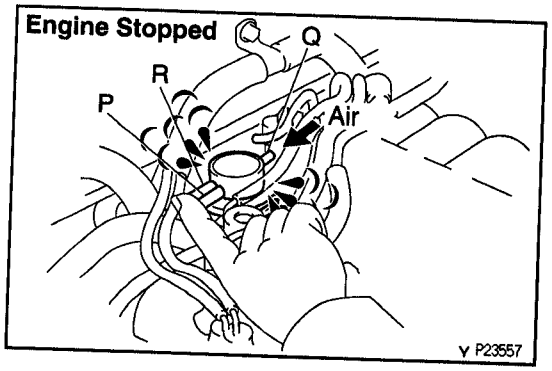

(c) Start the engine, and maintain speed at 3,500 rpm.
(d) Repeat the above test. Check that there is a strong resistance to air flow.

3. **RECONNECT VACUUM HOSES TO EGR VACUUM MODULATOR**

Connect these vacuum hoses:

(1) Vacuum hose to R port
(2) Vacuum hose to Q port
(3) Vacuum hose to P port

COMPONENTS FOR REMOVAL AND INSTALLATION

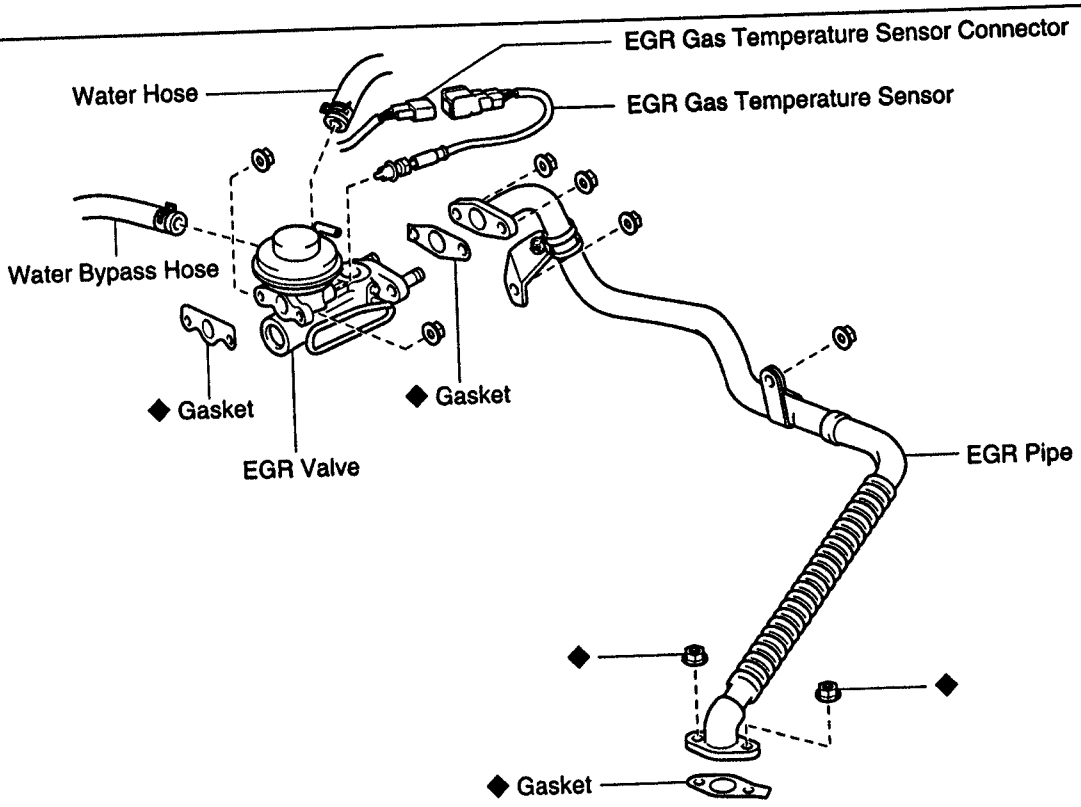

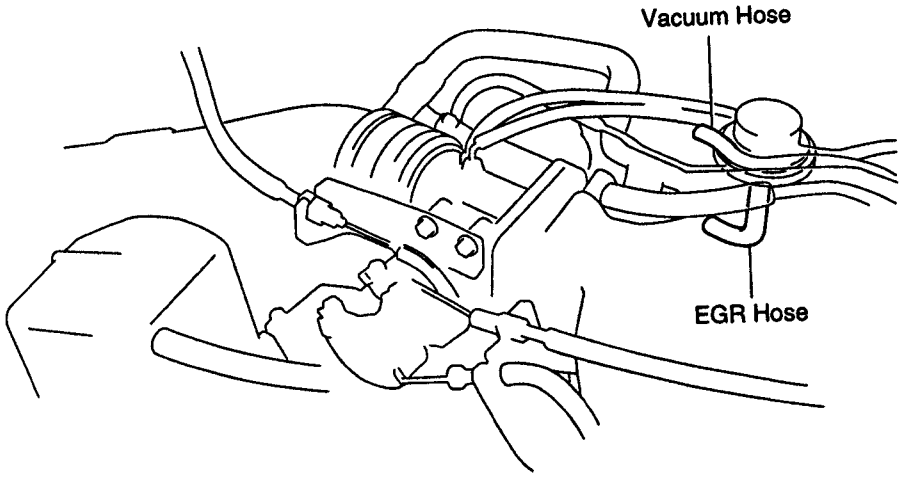

◆ Non-reusable part

Y P21189

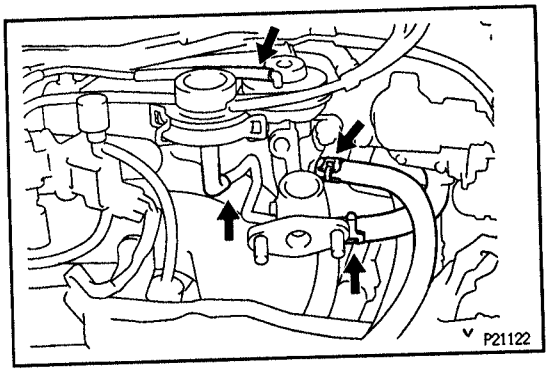

V P21122

EGR VALVE INSPECTION

Installation is in the reverse order of removal.

1. DRAIN ENGINE COOLANT
2. REMOVE EGR PIPE
   (See step 10 in cylinder head removal in Engine Mechanical)
3. REMOVE EGR GAS TEMPERATURE SENSOR
4. REMOVE EGR VALVE

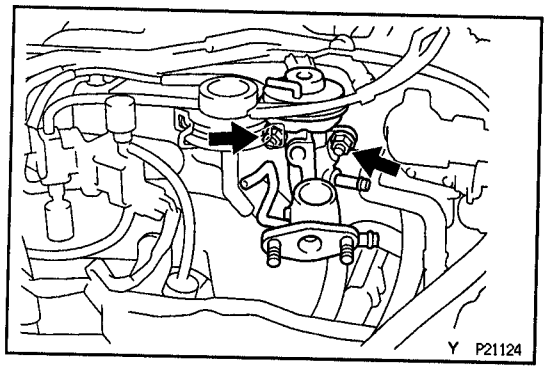

(a) Disconnect these hoses from the EGR valve:
- Vacuum hose (from VSV for EGR)
- EGR hose (from EGR vacuum modulator)
- Water hose (from water bypass pipe)
- Water bypass hose (from IAC valve)

(b) Remove the 2 nuts, EGR valve and gasket.
Torque: 18.5 N·m (185 kgf·cm, 14 ft·lbf)
INSTALLATION HINT: Use a new gasket.

5. INSPECT EGR VALVE
Check for sticking and heavy carbon deposits.
If a problem is found, replace the EGR valve.

THREE–WAY CATALYTIC CONVERTER (TWC) SYSTEM

EXHAUST PIPE ASSEMBLY INSPECTION

EG2GJ–0E

1. CHECK CONNECTIONS FOR LOOSENESS OR DAMAGE
2. CHECK CLAMPS FOR WEAKNESS, CRACKS OR DAMAGE

THREE–WAY CATALYTIC CONVERTER INSPECTION

EG3Z8–05

CHECK FOR DENTS OR DAMAGE
If any part of the protector is damaged or dented to the extent that it contacts the three–way catalytic converter, repair or replace it.

HEAT INSULATOR INSPECTION

EG3Z9–07

1. CHECK HEAT INSULATOR FOR DAMAGE
2. CHECK FOR ADEQUATE CLEARANCE BETWEEN CATALYTIC CONVERTER AND HEAT INSULATOR

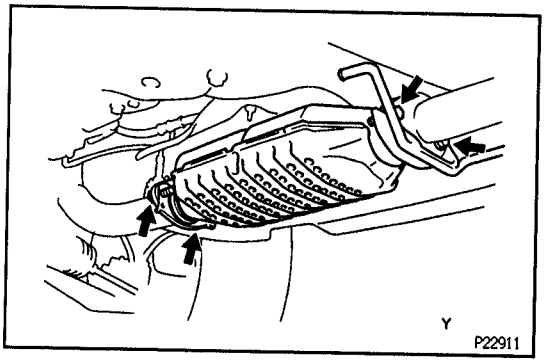

CATALYTIC CONVERTER REPLACEMENT

EG67M–01

Installation is in the reverse order of removal.
REMOVE CENTER EXHAUST PIPE
Remove the 4 bolts, TWC joint retainer, center exhaust pipe and 2 gasket.
Torque: 48 N·m (490 kgf·cm, 35 ft·lbf)
INSTALLATION HINT: Place 2 new gaskets on the front exhaust and tail pipes, and temporarily install the center exhaust pipe.

SERVICE SPECIFICATIONS

EG08Z-08

TORQUE SPECIFICATIONS

Part tightened	N·m	kgf·cm	ft·lbf
Charcoal canister x Charcoal canister bracket	31	310	23
EGR valve x Air intake chamber	18.5	185	14
EGR valve x EGR pipe	18.5	185	14
EGR pipe x LH exhaust manifold	18.5	185	14
EGR pipe stay x Cylinder head	8.0	80	71 in.·lbf
Heated oxygen sensor x Center exhaust pipe	20	200	14
Front exhaust pipe x Center exhaust pipe	48	490	35
Center exhaust pipe x Tailpipe	48	490	35

SFI SYSTEM

PRECAUTION

EG2ZA-04

1. **Before working on the fuel system, disconnect the negative (–) terminal cable from the battery.**
   HINT: Any diagnostic trouble code retained by the computer will be erased when the negative (–) terminal cable is removed from the battery.
   Therefore, if necessary, read the diagnosis before removing the negative (–) terminal cable from the battery.
2. **Do not smoke or work near an open flame when working on the fuel system.**
3. **Keep gasoline away from rubber or leather parts.**

EG4F5-03

MAINTENANCE PRECAUTIONS

1. **IN EVENT OF ENGINE MISFIRE, THESE PRECAUTIONS SHOULD BE TAKEN**

(a) Check proper connection to battery terminals, etc.
(b) After repair work, check that the ignition coil terminals and all other ignition system lines are reconnected securely.
(c) When cleaning the engine compartment, be especially careful to protect the electrical system from water.

2. **PRECAUTIONS WHEN HANDLING OXYGEN SENSOR**

(a) Do not allow oxygen sensor to drop or hit against an object.
(b) Do not allow the sensor to come into contact with water.

EG3CV-07

IF VEHICLE IS EQUIPPED WITH MOBILE RADIO SYSTEM (HAM, CB, ETC.)

If the vehicle is equipped with a mobile communication system, refer to the precaution in the IN section.

EG0GS-04

AIR INDUCTION SYSTEM

1. Separation of the engine oil dipstick, oil filler cap, PCV hose, etc. may cause the engine to run out of tune.
2. Disconnection, looseness or cracks in the parts of the air induction system between the throttle body and cylinder head will allow air suction and cause the engine to run out of tune.

EG3Z8-04

ELECTRONIC CONTROL SYSTEM

1. Before removing SFI wiring connectors, terminals, etc., first disconnect the power by either turning the ignition switch to LOCK or disconnecting the negative (−) terminal cable from the battery.
   HINT: Always check the diagnostic trouble code before disconnecting the negative (−) terminal cable from the battery.
2. When installing the battery, be especially careful not to incorrectly connect the positive (+) and negative (−) cables.
3. Do not permit parts to receive a severe impact during removal or installation. Handle all SFI parts carefully, especially the ECM.
4. Be careful during troubleshooting as there are numerous transistor circuit, and even slight terminal contact can cause further troubles.
5. Do not open the ECM cover.
6. When inspecting during rainy weather, take care to prevent entry of water. Also, when washing the engine compartment, prevent water from getting on the SFI parts and wiring connectors.
7. Parts should be replaced as an assembly.
8. Care should be taken when pulling out and inserting wiring connectors.
   (a) Release the lock and pull out the connector, pulling on the connectors.
   (b) Fully insert the connector and check that it is locked.
9. Use SST for inspection or test of the injector or its wiring connector.
   SST 09842−30070

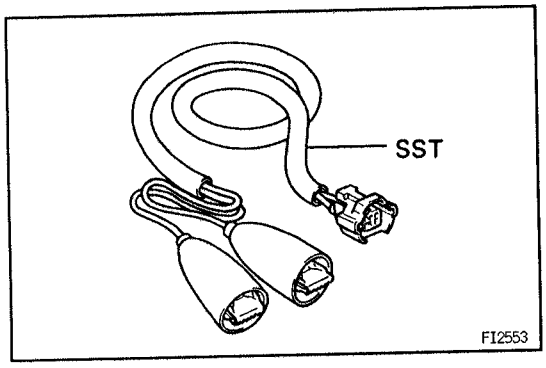

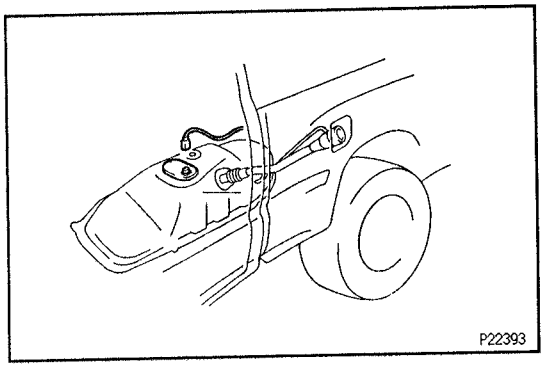

EG4ZY-05

FUEL SYSTEM

1. When disconnecting the high fuel pressure line, a large amount of gasoline will spill out, so observe these procedures:
   (a) Disconnect the fuel pump connector.
   (b) Start the engine. After the engine has stopped on its own, turn the ignition switch to LOCK.

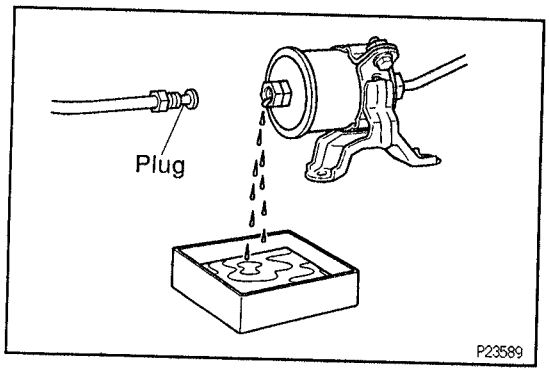

(c) Put a container under the connection.
(d) Slowly loosen the connection.
(e) Disconnect the connection.
(f) Plug the connection with a rubber plug.

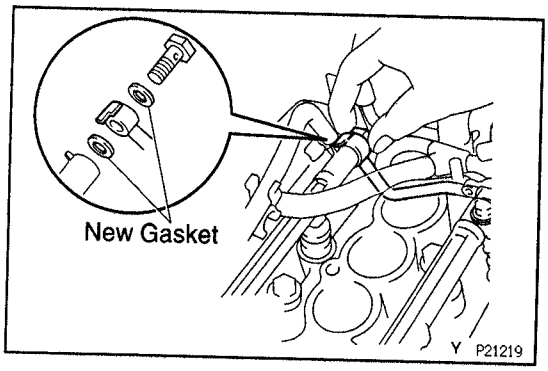

2. When connecting the flare nut or union bolt on the high pressure pipe union, observe these procedures:
Union Bolt Type:
(a) Always use 2 new gaskets.
(b) Tighten the union bolt by hand.
(c) Tighten the union bolt to the specified torque.
Torque: 34.3 N·m (350 kgf·cm, 25 ft·lbf)

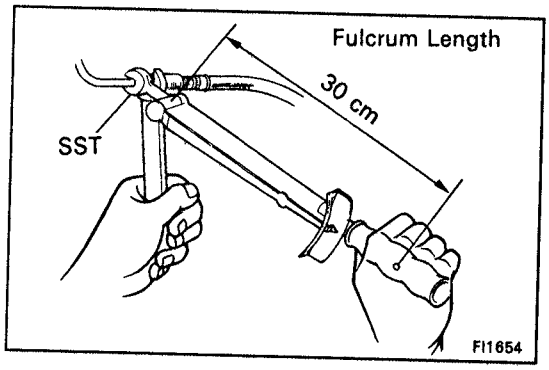

Flare Nut Type:
(a) Apply a light coat of engine oil to the flare nut, and tighten the flare nut by hand.
(b) Using SST, tighten the flare nut to specified torque.
SST 09631-22020
NOTICE: Do not rotate the fuel pipe, when tightening the flare nut.
Torque:
34.3 N·m (350 kgf·cm, 25 ft·lbf)
28 N·m (285 kgf·cm, 21 ft·lbf) for using SST
HINT: Use a torque wrench with a fulcrum length of 30 cm (11.81 in.).

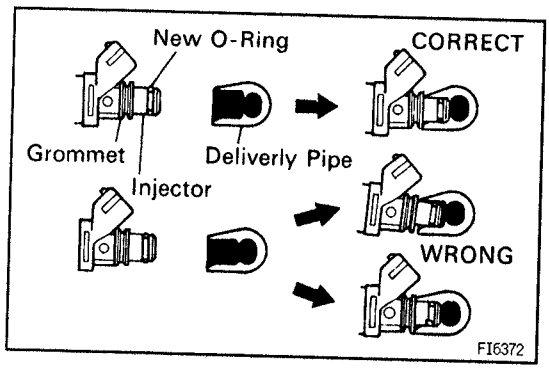

3. Observe these precautions when removing and installing the injectors.
(a) Never reuse the O-ring.
(b) When placing a new O-ring on the injector, take care not to damage it in any way.
(c) Coat a new O-ring with spindle oil or gasoline before installing-never use engine, gear or brake oil.

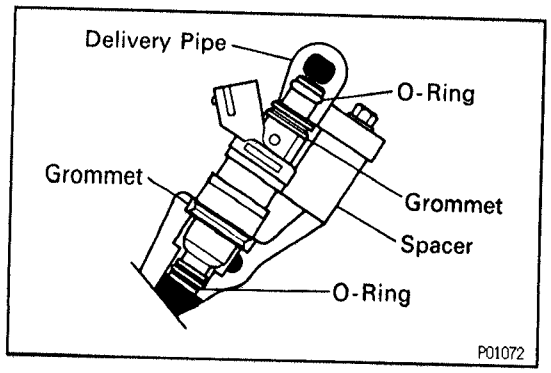

4. Install the injector to the delivery pipe and intake manifold, as shown in the illustration.

5. Check that there are no fuel leaks after doing maintenance anywhere on the fuel system.
(a) Connect the TOYOTA hand-held tester to the DLC3.
(b) Turn the ignition switch ON and push TOYOTA hand-held tester main switch ON.

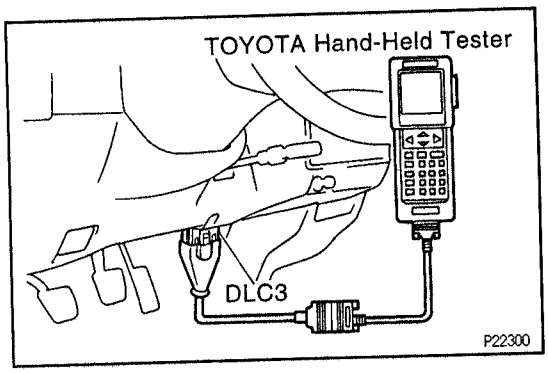

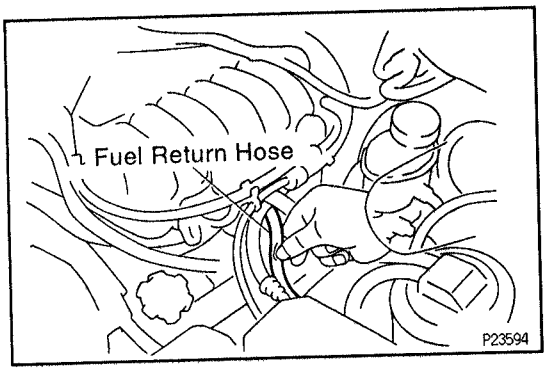

NOTICE: Do not start the engine.

(c) Select the active test mode on the TOYOTA hand-held tester.

(d) Please refer to the TOYOTA hand – held tester operator's manual for further details.

(e) If you have no TOYOTA hand-held tester, connect the positive (+) and negative (–) leads from the battery to the fuel pump connector.
(See step 2 in fuel pump inspection)

(f) Pinch the fuel return hose.
The pressure in the high pressure line will rise to approx. 400 kPa (4 kgf/cm², 57 psi). In this state, check to see that there are no leaks from any part of the fuel system.
NOTICE: Always pinch the hose. Avoid bending as it may cause the hose to crack.

(g) Turn the ignition switch to LOCK.

(h) Disconnect the TOYOTA hand-held tester from the DLC3.

PREPARATION

EG0FZ-08

SST (SPECIAL SERVICE TOOLS)

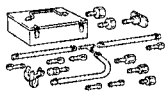	09268-41046 Injection Measuring Tool Set	
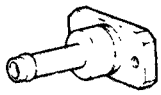	(09268-41091) NO.7 Union	
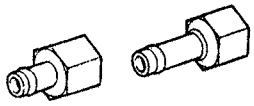	(09268-52011) Injection Measuring Attachment	
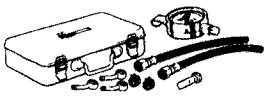	09268-45012 EFI Fuel Pressure Gauge	
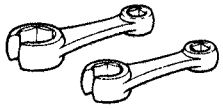	09631-22020 Power Steering Hose Nut 14 x 17 mm Wrench Set	Fuel line flare nut
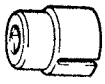	09817-16011 Back-up Light Switch Tool	Knock sensor
	09842-30070 Wiring "F" EFI Inspection	

	09843–18020 Diagnosis Check Wire	

RECOMMENDED TOOLS

EG0G0–04

	09082–00050 TOYOTA Electrical Tester Set.	
	09200–00010 Engine Adjust Kit .	
	09258–00030 Hose Plug Set .	Plug for the vacuum hose, fuel hose etc.

EG

EQUIPMENT

EG0G1–05

OBD II scan tool	Engine speed
Graduated cylinder	Injector
Caburetor cleaner	Throttle body
Sound scope	Injector
Torque wrench	
Soft brush	Throttle body

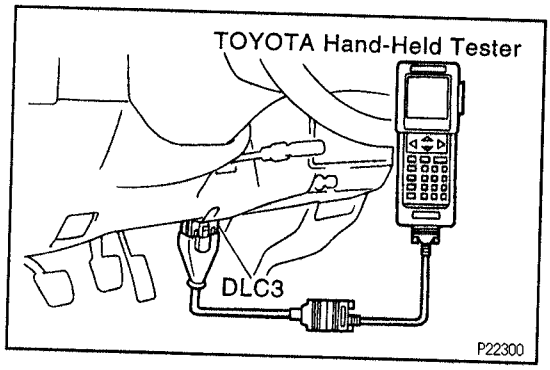

FUEL PUMP

ON–VEHICLE INSPECTION

EG66N–01

1. CHECK FUEL PUMP OPERATION

(a) Connect the TOYOTA hand–held tester to the DLC3.

(b) Turn the ignition switch ON and push TOYOTA hand –held tester main switch ON.

NOTICE: Do not start the engine.

(c) Select the active test mode on the TOYOTA hand–held tester.

(d) Please refer to the TOYOTA hand – held tester operator's manual for further details.

(e) If you have no TOYOTA hand–held tester, connect the positive (+) and negative (–) leads from the battery to the fuel pump connector.
(See step 2 in fuel pump inspection)

(f) Check that there is pressure in the fuel inlet hose from the fuel filter.

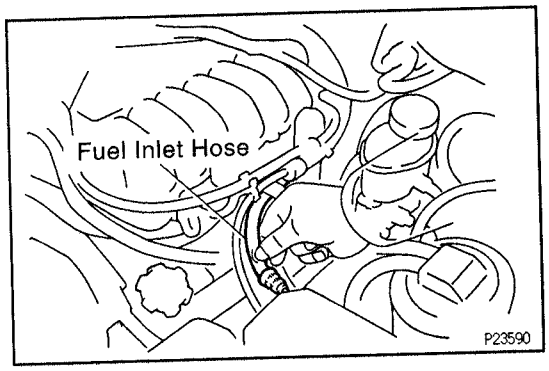

HINT: If there is fuel pressure, you will hear the sound of fuel flowing.
If there is no pressure, check these parts:

- H–fuse (ALT 80A)
- M–fuses (AM1 40A, AM2 30A)
- Fuses (EFI 15A, IGN 7.5A)
- EFI main relay
- Circuit opening relay
- Fuel pump
- ECM
- Wiring connections

EG

(g) Turn the ignition switch to LOCK.
(h) Disconnect the TOYOTA hand–held tester from the DLC3.

2. CHECK FUEL PRESSURE

(a) Check the battery positive voltage is above 12 V.
(b) Disconnect the negative (–) terminal cable from the battery.
(c) Remove the 6 bolts, and disconnect the No.2 timing belt cover.
(d) Remove the union bolt holding the fuel pipe to the delivery pipe and gasket.

CAUTION:

- **Put a shop towel under the delivery pipe.**
- **Slowly loosen the union bolt.**

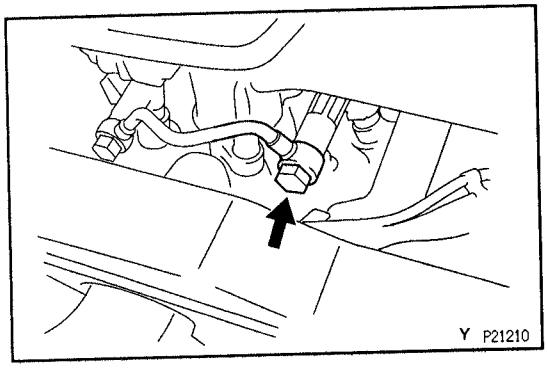

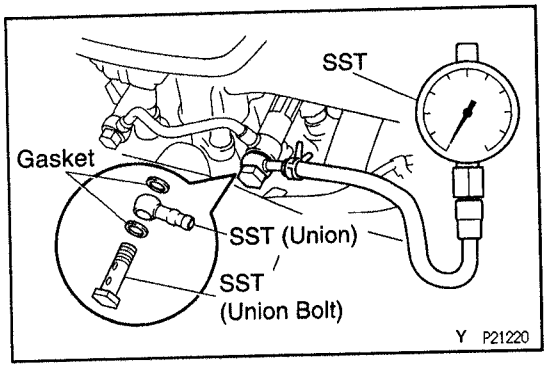

(e) Install SST (pressure gauge) to the delivery pipe with the 2 gaskets and SST (union and union bolt).
SST 09268–45012
Torque: 34.3 N·m (350 kgf·cm, 25 ft·lbf)
(f) Wipe off any splattered gasoline.

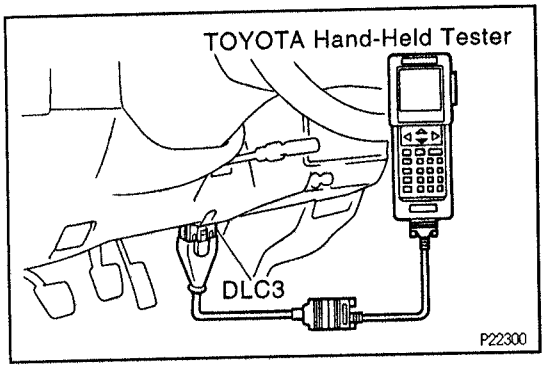

(g) Connect the TOYOTA hand–held tester to the DLC3. (See step 1. check fuel pump operation (a) to (e))
(h) Reconnect the negative (–) terminal cable to the battery.
(i) Turn the ignition switch ON.
(j) Measure the fuel pressure.

Fuel pressure:
265 – 304 kPa (2.7 – 3.1 kgf/cm², 38 – 44 psi)

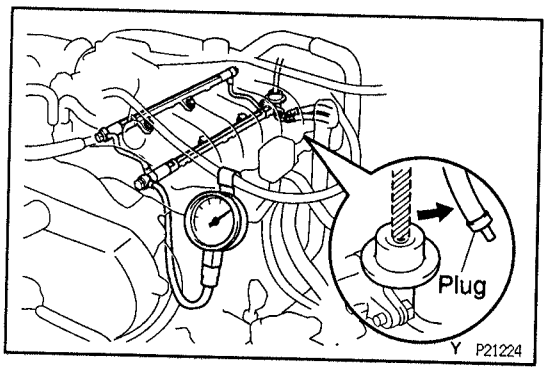

If pressure is high, replace the fuel pressure regulator.
If pressure is low, check these parts:

- Fuel hoses and connections
- Fuel pump
- Fuel filter
- Fuel pressure regulator
- VSV for fuel pressure control

(k) Disconnect the TOYOTA hand–held tester from the DLC3.

(l) Reinstall the No.2 timing belt cover with the 6 bolts.
Torque: 9 N·m (90 kgf·cm, 80 in.·lbf)

(m) Start the engine.

(n) Disconnect the vacuum sensing hose from the fuel pressure regulator, and plug the hose end.

(o) Measure the fuel pressure at idle.
Fuel pressure:
265 – 304 kPa (2.7 – 3.1 kgf/cm², 38 – 44 psi)

(p) Reconnect the vacuum sensing hose to the fuel pressure regulator.

(q) Measure the fuel pressure at idle.
Fuel pressure:
226 – 265 kPa (2.3 – 2.7 kgf/cm², 33 – 38 psi)
If pressure is not as specified, check the vacuum sensing hose and fuel pressure regulator.

(r) Stop the engine.

(s) Check that the fuel pressure remains as specified for 5 minutes after the engine has stopped.
Fuel pressure:
147 kPa (1.5 kgf/cm², 21 psi) or more
If pressure is not as specified, check the fuel pump, pressure regulator and/or injectors.

(t) After checking fuel pressure, disconnect the negative (–) terminal cable from the battery and carefully remove the SST to prevent gasoline from splashing.
SST 09268–45012

(u) Remove the other union bolt, 3 gaskets and fuel pipe from the delivery pipes.

(v) Reinstall the fuel pipe with 4 new gaskets and the 2 union bolts.
Torque: 34.3 N·m (350 kgf·cm, 25 ft·lbf)

(w) Reconnect the negative (–) terminal cable to the battery.

(x) Check for fuel leakage.
(See fuel system in precaution)

FUEL PUMP REMOVAL

EG3ZF–06

CAUTION: Do not smoke or work near an open flame when working on the fuel pump.

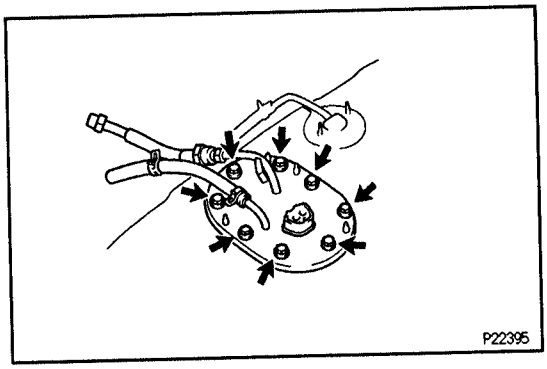

1. **REMOVE FUEL TANK**
   (See page EG–134)
   Torque: 62 N·m (620 kgf·cm, 45 ft·lbf)
   INSTALLATION HINT: Check for fuel leakage.
   (See fuel system in precaution)
2. **REMOVE FUEL PUMP BRACKET ASSEMBLY FROM FUEL TANK**
   (a) Disconnect the fuel pump connector from the clamp.
   (b) Remove the 8 bolts.
   Torque: 3.4 N·m (35 kgf·cm, 30 in.·lbf)
   (c) Pull out the pump bracket assembly.
   (d) Remove the gasket from the pump bracket.
   INSTALLATION HINT: Install a new gasket to the pump bracket.

EG

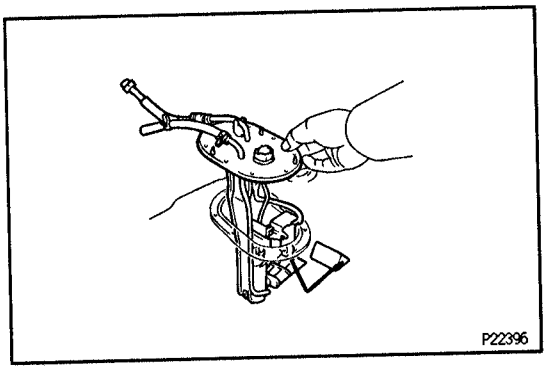

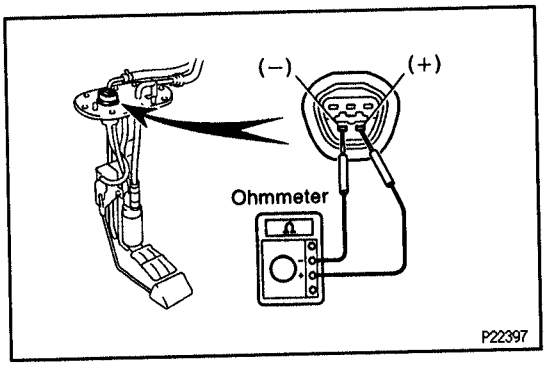

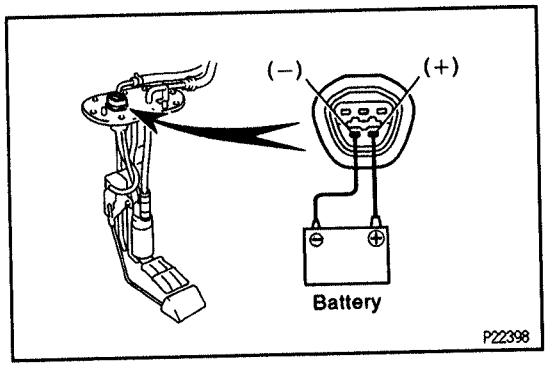

FUEL PUMP INSPECTION

1. **INSPECT FUEL PUMP RESISTANCE**
   Using an ohmmeter, measure the resistance between the terminals.
   Resistance: At 20°C (68°F): 0.2 – 3.0 Ω
   If the resistance is not as specified, replace the fuel pump and/or set plate.
2. **INSPECT FUEL PUMP OPERATION**
   Connect the positive (+) lead from the battery to terminal 4 of the connector, and the negative (–) lead to terminal 5. Check that the fuel pump operates.
   NOTICE:
   - **These tests must be done quickly (within 10 seconds) to prevent the coil from burning out.**
   - **Keep the fuel pump as far away from the battery as possible.**
   - **Always do switching at the battery side.**

   If operation is not as specified, replace the fuel pump and/or plate.

COMPONENTS FOR DISASSEMBLY AND ASSEMBLY

EGOOG–05

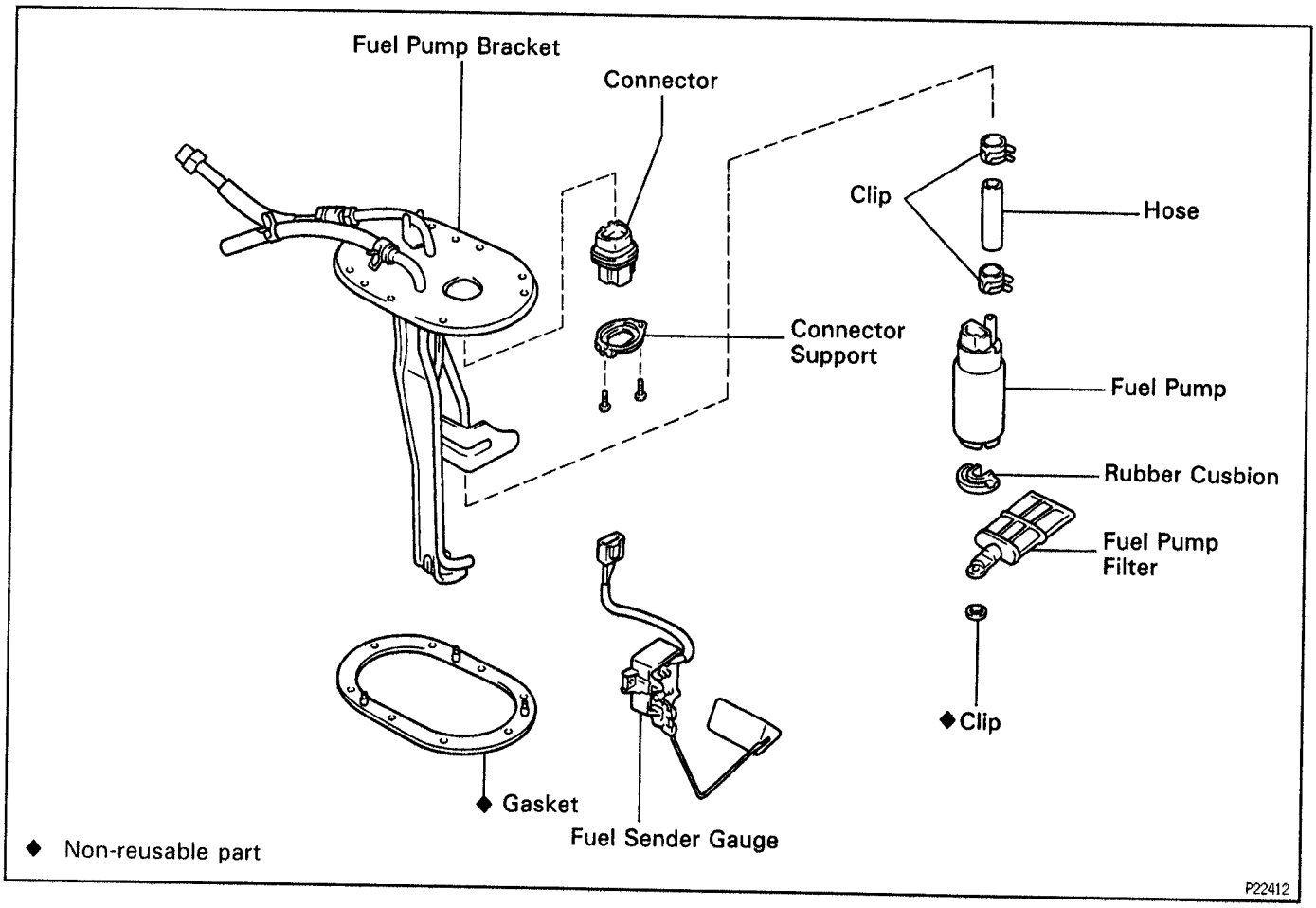

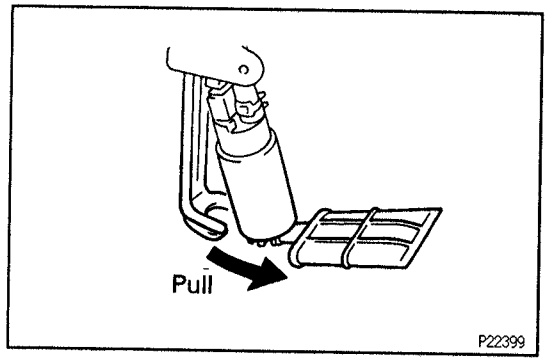

FUEL PUMP DISASSEMBLY

EG5A3–01

1. REMOVE FUEL PUMP FROM FUEL PUMP BRACKET

(a) Disconnect the fuel pump connector.

(b) Pull off the lower side of the fuel pump from the pump bracket.

(c) Disconnect the fuel hose from the fuel pump, and remove the fuel pump.

(d) Remove the rubber cushion from the fuel pump.

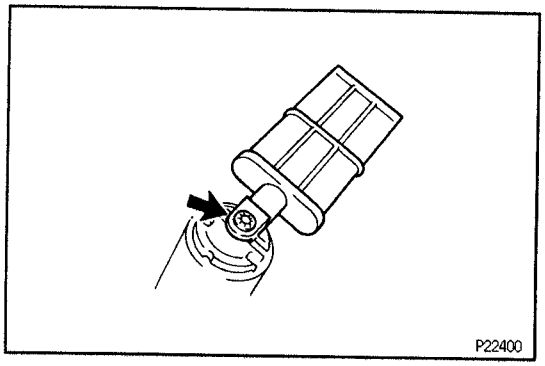

2. REMOVE FUEL PUMP FILTER FROM FUEL PUMP

(a) Using a small screwdriver, remove the clip.
INSTALLATION HINT: Install the pump filter with a new clip.

(b) Pull out the pump filter.

EG66P–01

FUEL PUMP ASSEMBLY

Assembly is in the reverse order of removal.

EG66Q–01

FUEL PUMP INSTALLATION

Installaiton is in the reverse order of removal.

EG

EG6A4–03

FUEL PRESSURE REGULATOR COMPONENTS FOR REMOVAL AND INSTALLATION

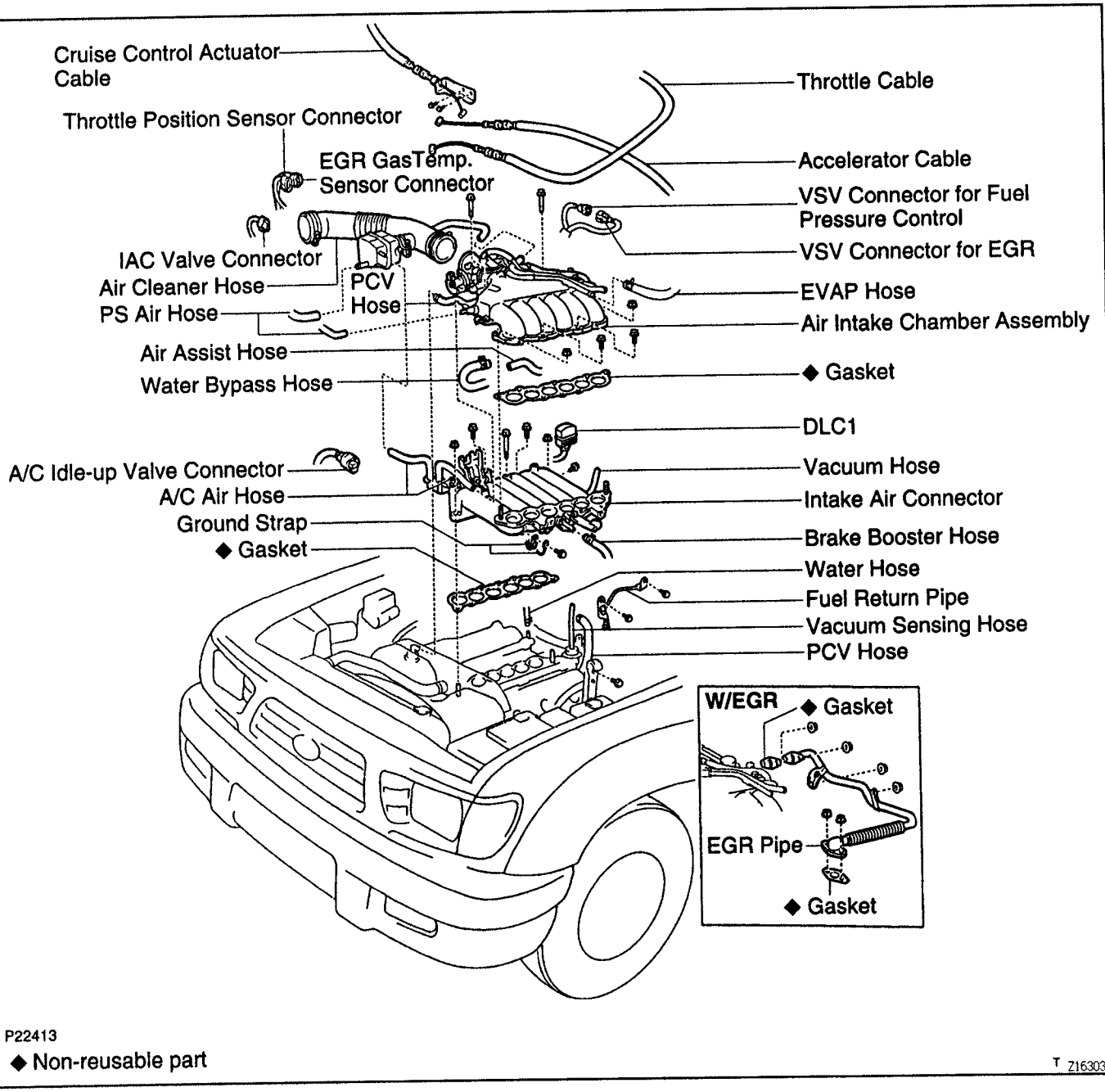

P22413

◆ Non-reusable part

T Z16303

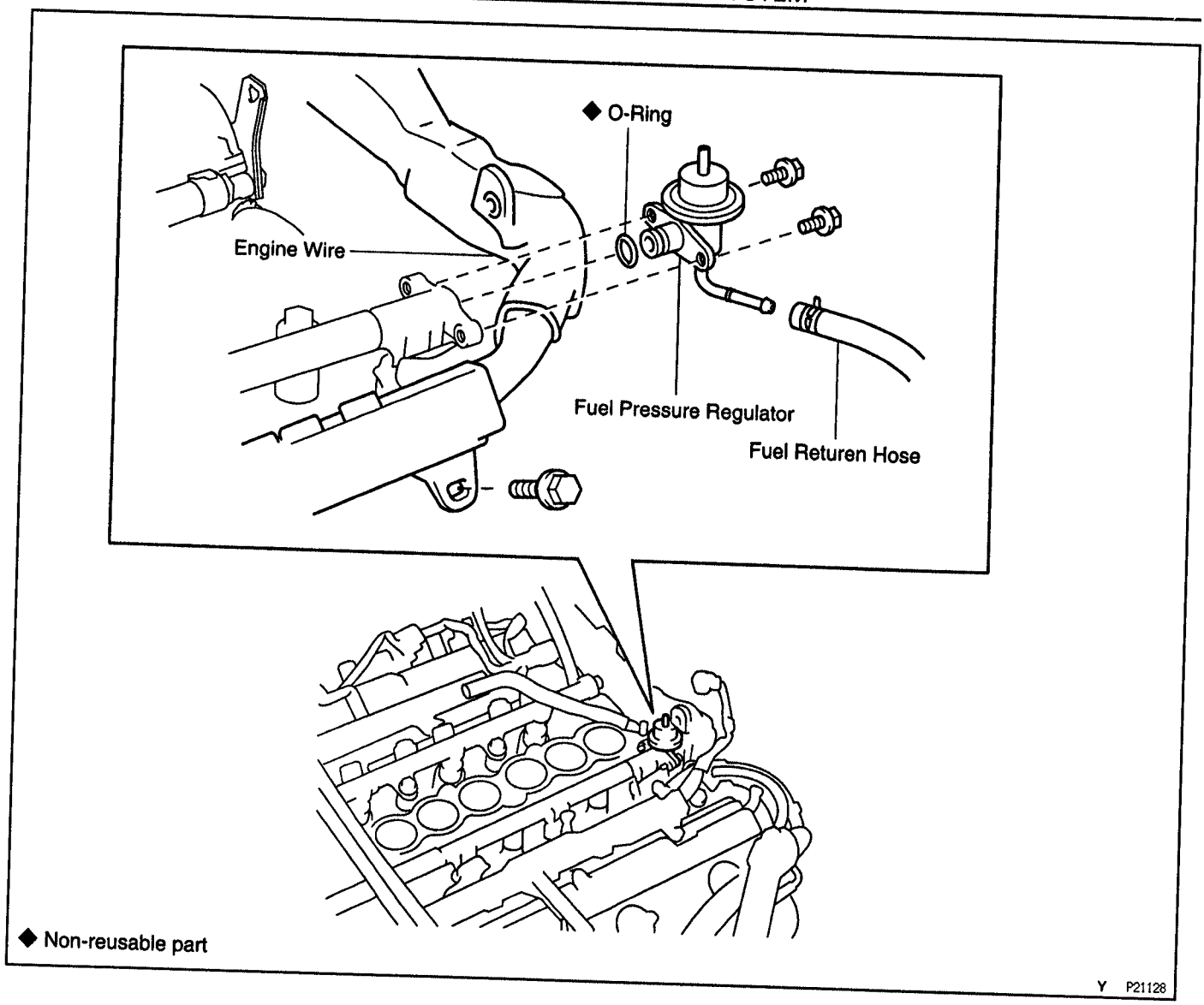

FUEL PRESSURE REGULATOR REMOVAL EG3ZG–04

1. **REMOVE AIR CLEANER HOSE**
2. **REMOVE INTAKE AIR CONNECTOR**
   (See steps 2, 8 and 11 to 13 in cylinder head removal in Engine Mechanical)
3. **DISCONNECT FUEL RETURN HOSE FROM FUEL PRESSURE REGULATOR**
   CAUTION: Put a shop rag under the pressure regulator.

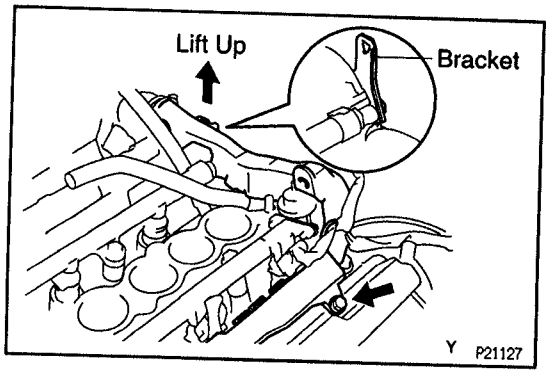

4. **REMOVE FUEL PRESSURE REGULATOR**
   (a) Remove holding bolt the engine wire to the LH cylinder head cover.
   (b) Disconnect the protector from the bracket on the RH cylinder head cover, and lift up the engine wire.

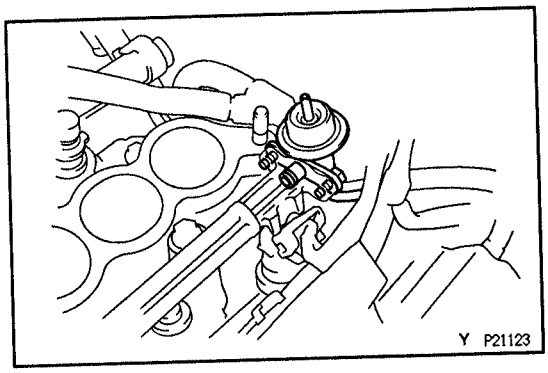

(c) Remove the 2 bolts, and pull out the pressure regulator.
(d) Remove the O-ring from the pressure regulator.

EG5AS-01

FUEL PRESSURE REGULATOR INSTALLATION

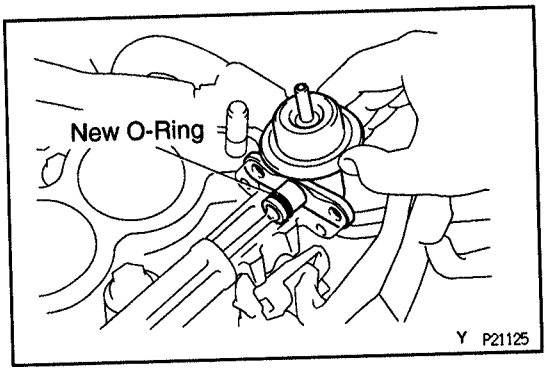

1. INSTALL FUEL PRESSURE REGULATOR

(a) Apply a light coat of gasoline to a new O-ring, and install it to the pressure regulator.
(b) Attach the pressure regulator to the LH delivery pipe.

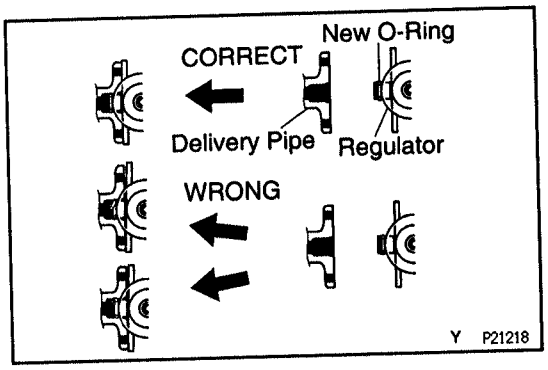

(c) Check that the pressure regulator rotates smoothly.
NOTICE: If it does not rotate smoothly, the O-ring may be pinched, so remove the pressure regulator and repeat steps (a) to (c) above.
(d) Install the pressure regulator with the 2 bolts.
Torque: 8 N·m (80 kgf·cm, 71 in.·lbf)
(e) Install the engine wire with the bolt.

2. CONNECT FUEL RETURN HOSE TO FUEL PRESSURE REGULATOR

NOTICE: Be sure to insert the hose up to the stopper and clip it.

3. INSTALL INTAKE AIR CONNECTOR

(See steps 16 to 19, 24 and 27 in cylinder head installation in Engine Mechanical)

4. INSTALL AIR CLEANER HOSE

5. CHECK FOR FUEL LEAKS

(See fuel system in precaution)

INJECTOR

COMPONENTS FOR REMOVAL AND INSTALLATION

EG5A6–03

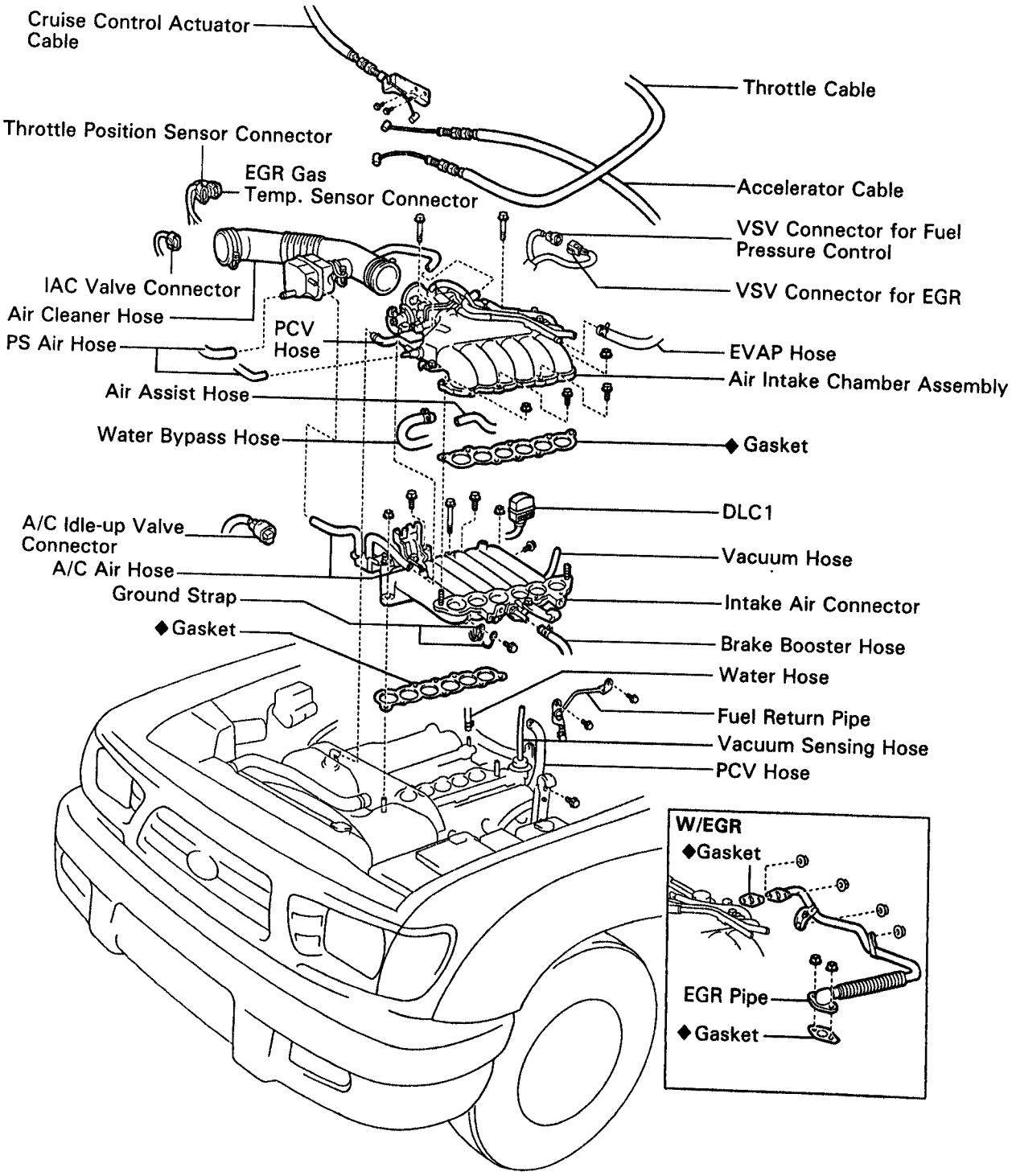

◆ Non-reusable part

P22413

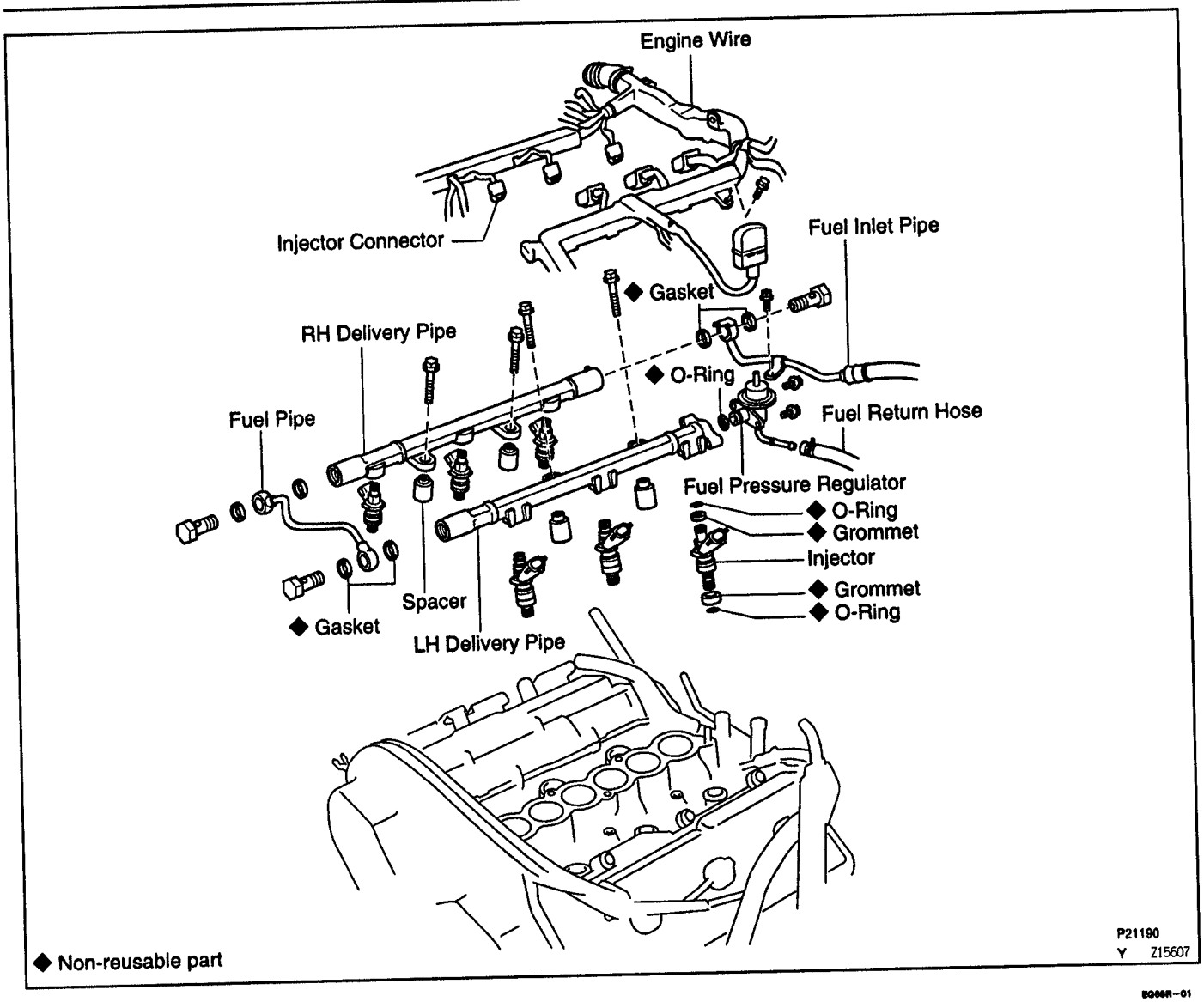

EG06R-01

INJECTORS REMOVAL

1. **REMOVE AIR CLEANER HOSE**
2. **REMOVE INTAKE AIR CONNECTOR**
   (See steps 2, 8 and 11 to 13 in cylinder head removal in Engine Mechanical)
3. **REMOVE FUEL PRESSURE REGULATOR**
   (See steps 3 and 4 in fuel pressure regulator removal)
4. **DISCONNECT FUEL INLET PIPE**
   CAUTION: Catch leaking fuel in a container.
5. **REMOVE FUEL PIPE**
6. **DISCONNECT INJECTOR CONNECTORS**
7. **REMOVE DELIVERY PIPES AND INJECTORS**
   NOTICE: Be careful not to drop the injectors when removing the delivery pipes.

(a) Remove the 4 bolts and delivery pipes together with the 6 injectors

(b) Remove the 4 spacers from the intake manifold.

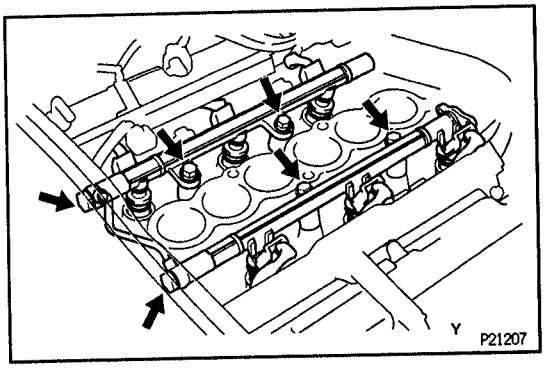

(c) Pull out the 6 injectors from the delivery pipes.
(d) Remove the 2 O–rings and 2 grommets from each injector.

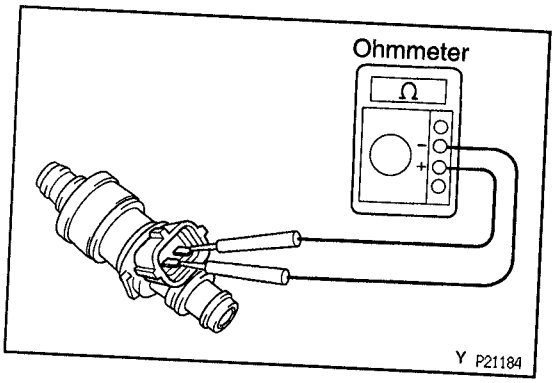

INJECTORS INSPECTION

EGSA6–03

EG

1. INSPECT INJECTOR RESISTANCE

Using an ohmmeter, measure the resistance between the terminals.

Resistance:

At 20°C (68°F): Approx. 13.8 Ω

If the resistance is not as specified, replace the injector.

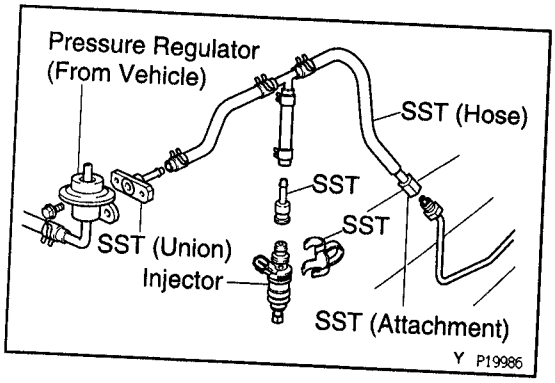

2. INSPECT INJECTOR INJECTION

CAUTION: Keep injector clear of sparks during the test.

(a) Disconnect the fuel inlet pipe from the fuel tube.
(b) Connect SST (attachment and hose) to the fuel tube.
SST 09268–41046 (09268–52011)
(c) Connect the fuel return hose, SST (union) and SST (hose) to the fuel pressure regulator.
SST 09268–41046 (09268–41091)

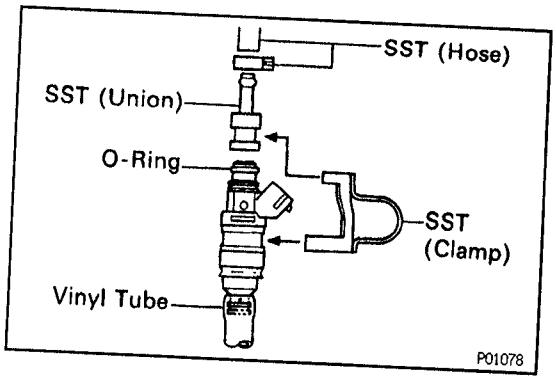

(d) Install the O–ring to the injector.
(e) Connect SST (union and hose) to the injector, and hold the injector and union with SST (clamp).
SST 09268–41046
(f) Put the injector into the graduated cylinder.
HINT: Install a suitable vinyl hose onto the injector to prevent gasoline from splashing out.

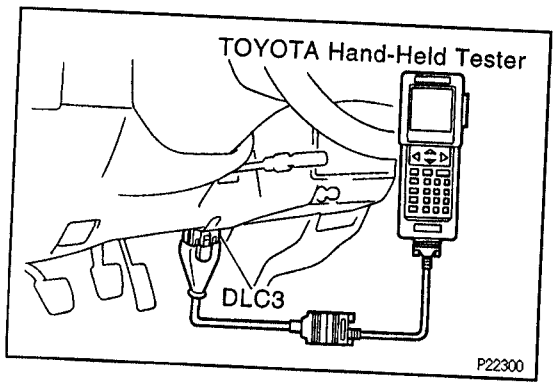

(g) Connect the TOYOTA hand–held tester to the DLC3.
(h) Turn the ignition switch ON and TOYOTA hand–held tester main switch ON.
NOTICE: Do not start the engine.
(i) Select the active test mode on the TOYOTA hand–held tester.
(j) Please refer to the TOYOTA hand – held tester operator's manual for further details.

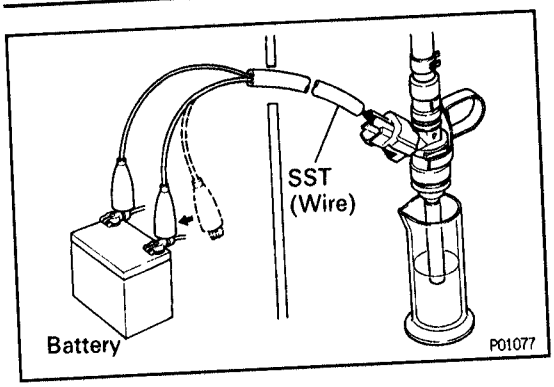

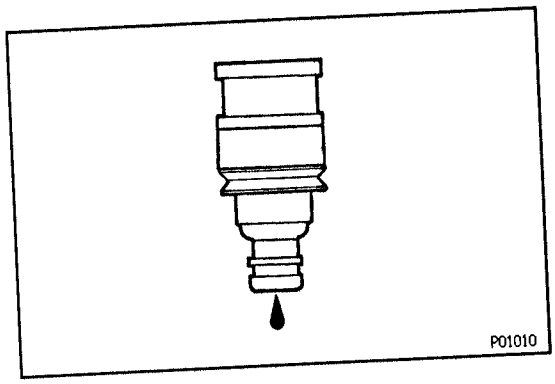

(k) If you have no TOYOTA hand-held tester, connect the positive (+) and negative (–) leads from the battery to the fuel pump connector.
(See step 2 in fuel pump inspection)

(l) Connect SST (wire) to the injector and battery for 15 seconds, and measure the injection volume with a graduated cylinder. Test each injector 2 or 3 times.
SST 09842-30070

Volume:
56 – 69 cm³ (3.4 – 4.2 cu in.) per 15 sec.

Difference between each injector:
6 cm³ (0.4 cu in.) or less

If the ignition volume is not as specified, replace the injector.

3. INSPECT LEAKAGE

(a) In the condition above, disconnect the test probes of SST (wire) from the battery and check the fuel leakage from the injector.
SST 09842-30070

Fuel drop:
1 drop or less per minute

(b) Turn the ignition switch to LOCK.

(c) Disconnect the negative (–) terminal cable from the battery.

(d) Remove SST.
SST 09268-41045

(e) Disconnect the TOYOTA hand-held tester from the DLC3.

EG068-01

INJECTORS INSTALLATION

1. TEMPORARILY INSTALL INJECTORS AND DELIVERY PIPES

(a) Install 2 new grommets to each injector.

(b) Apply a light coat of spindle oil or gasoline to 2 new O-rings and install them to each injector.

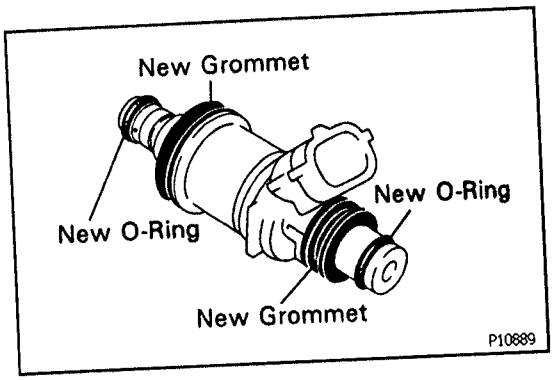

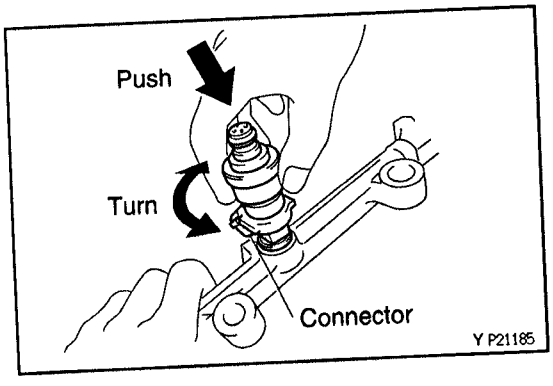

(c) While turning the injector clockwise and counter-clockwise, push it to the delivery pipes. Install the 6 injectors.

(d) Position the injector connector outward.

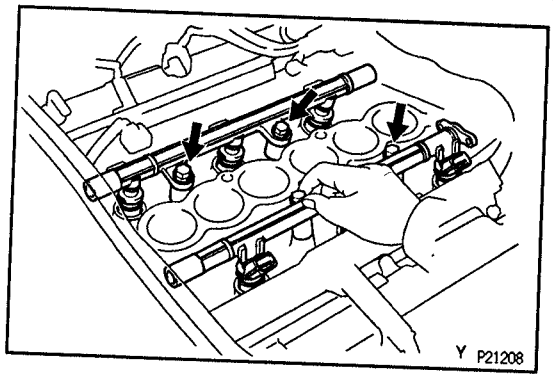

(e) Place the 4 spacers in position on the intake manifold.
(f) Place the delivery pipes with the 6 injectors in position on the intake manifold.
(g) Temporarily install the 4 bolts holding the delivery pipes to the intake manifold.

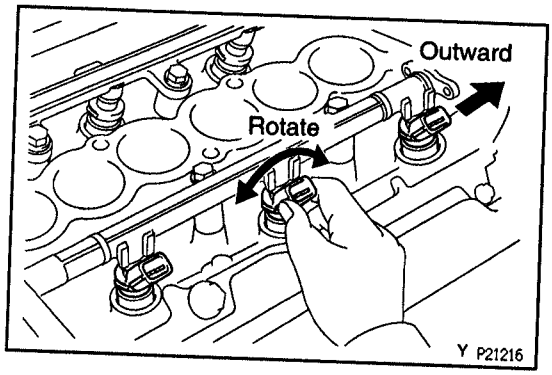

(h) Check that the injectors rotate smoothly.
HINT: If injectors do not rotate smoothly, the probable cause is incorrect installation of O–rings. Replace the O–rings.
(i) Position the injector connector outward.

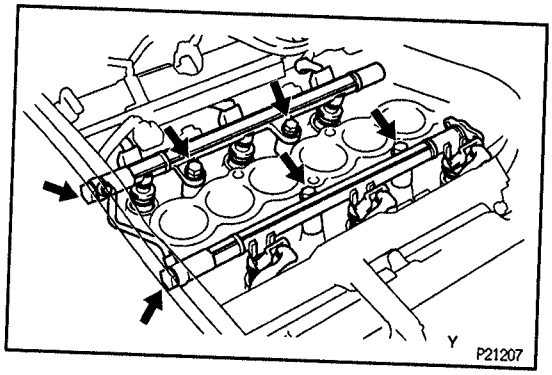

2. CONNECT INJECTOR CONNECTORS

3. INSTALL FUEL PIPE AND TIGHTENING DELIVERY PIPE HOLDING BOLTS

(a) Install the fuel pipe with 4 new gaskets and the 2 union bolts.
Torque: 34.3 N·m (350 kgf·cm, 25 ft·lbf)
(b) Tighten the 4 bolts holding the delivery pipes to the intake manifold.
Torque: 13 N·m (130 kgf·cm, 10 ft·lbf)

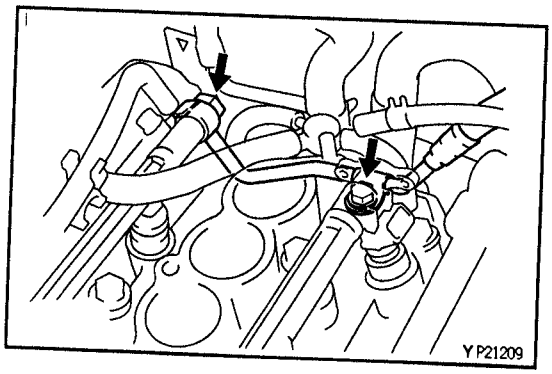

4. CONNECT FUEL INLET PIPE

(a) Temporarily install the union and 2 new gaskets, and connect the fuel pipe.
(b) Install the clamp bolt.
Torque: 8 N·m (80 kgf·cm, 71 in.·lbf)
(c) Tighten the union bolt.
Torque: 34.3 N·m (350 kgf·cm, 25 ft·lbf)

5. INSTALL FUEL PRESSURE REGULATOR
(See steps 1 and 2 in fuel pressure regulator installation)

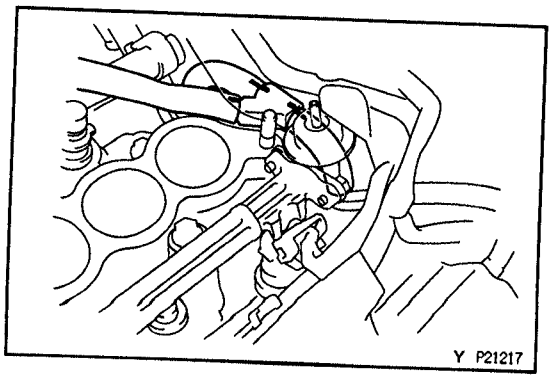

6. VISUALLY INSPECT AIR ASSIST LINES AND CONNECTIONS
Look for loose connections, sharp bends or damage.

7. INSTALL INTAKE AIR CONNECTOR
(See steps 16 to 19, 24 and 27 in cylinder head installation in Engine Mechanical)

8. INSTALL AIR CLEANER HOSE

9. CHECK FOR FUEL LEAKS
(See fuel system in precaution)

FUEL TANK AND LINE
COMPONENTS

EG0GX-07

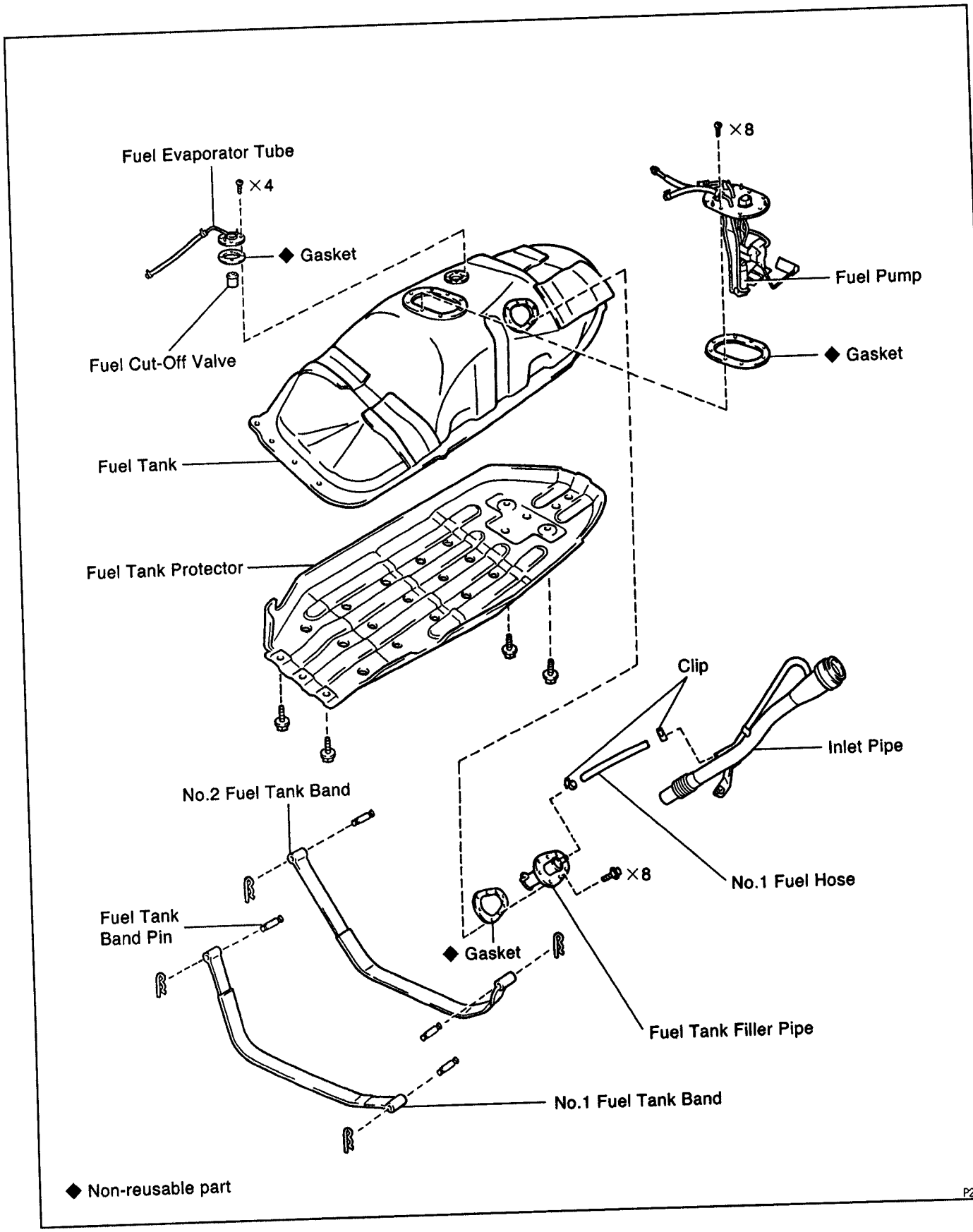

PRECAUTIONS

E00GY–04

1. **Always use new gaskets when replacing the fuel tank or component parts.**
2. **Apply the proper torque to all tightened parts.**

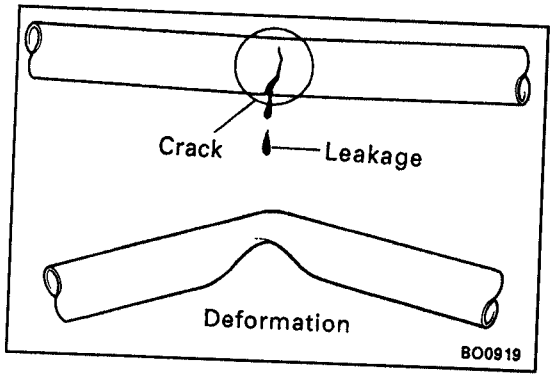

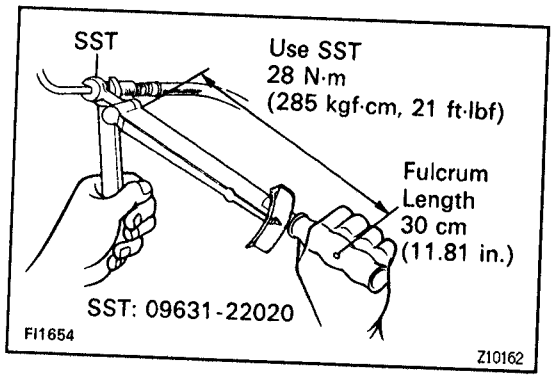

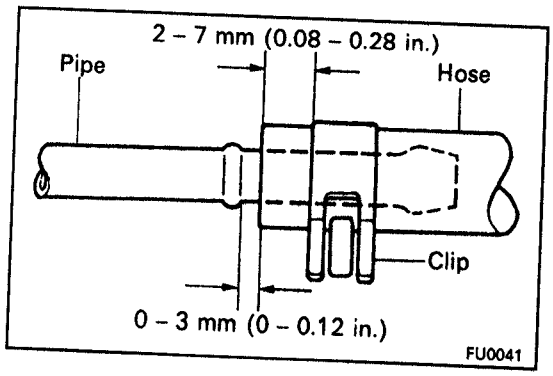

FUEL LINES AND CONNECTIONS INSPECTION

E00GZ–04

EG

(a) Check the fuel lines for cracks or leakage, and all connections for deformation.

(b) Check the fuel tank vapor vent system hoses and connections for looseness, sharp bends or damage.

(c) Check the fuel tank for deformation, cracks, fuel leakage or tank band looseness.

(d) Check the filler neck for damage or fuel leakage.

(e) Hose and pipe connections are as shown in the illustration.

If a problem is found, repair or replace the parts as necessary.

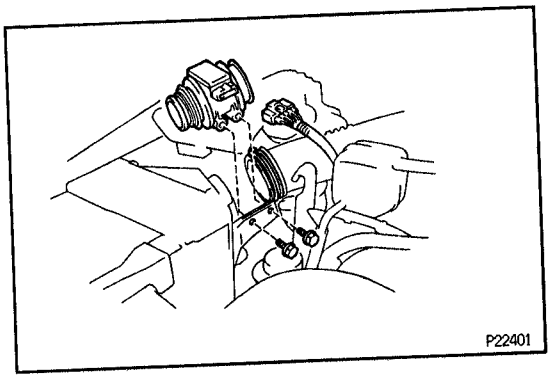

MASS AIR FLOW (MAF) METER

EG5AA-03

MAF METER REMOVAL

1. DISCONNECT AIR CLEANER CAP FROM MAF METER
2. REMOVE MAF METER

(a) Disconnect the MAF meter connector.

(b) Remove the 2 bolts and MAF meter.

Torque: 6.9 N·m (72 kgf·cm, 61 in.·lbf)

EG3D6-04

MAF METER INSPECTION

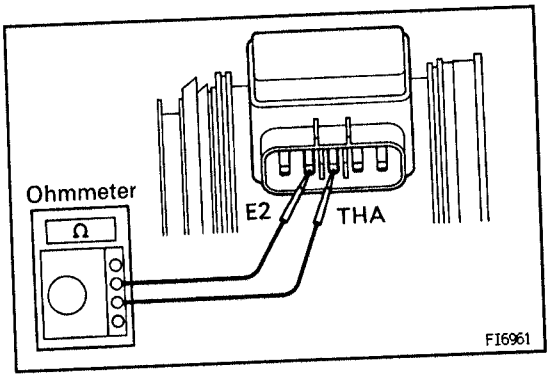

1. INSPECT MAF METER RESISTANCE

Using an ohmmeter, measure the resistance between terminals THA and E2.

Between terminals	Resistance	Temperature
THA – E2	10 – 20 kΩ	–20°C (–4°F)
THA – E2	4 – 7 kΩ	0°C (32°F)
THA – E2	2 – 3 kΩ	20°C (68°F)
THA – E2	0.9 – 1.3 kΩ	40°C (104°F)
THA – E2	0.4 – 0.7 kΩ	60°C (140°F)
THA – E2	0.2 – 0.4 kΩ	80°C (176°F)

If the resistance is not as specified, replace the MAF meter.

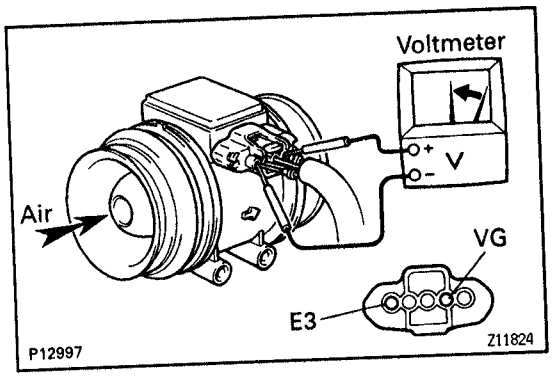

2. INSPECT MAF METER OPERATION

(a) Connect the MAF meter connector.

(b) Using a voltmeter, connect the positive (+) tester probe to terminal VG, and negative (–) tester probe to terminal E3.

(c) Blow air into the MAF meter, and check that the voltage fluctuates.

If operation is not as specified, replace the MAF meter.

(d) Disconnect the MAF meter connector.

EG66T-01

MAF METER INSTALLATION

Installation is in the reverse order of removal.

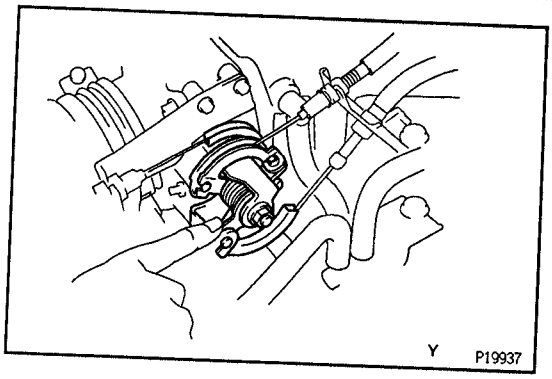

THROTTLE BODY

ON–VEHICLE INSPECTION

EGSAB–02

1. INSPECT THROTTLE BODY

(a) Check that the throttle linkage moves smoothly.

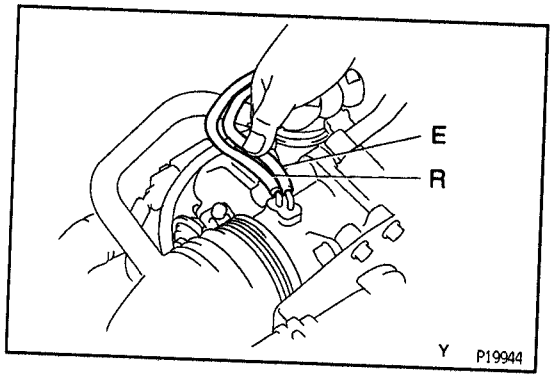

(b) w/ EGR:

Check the vacuum at each port.

- Start the engine.
- Check the vacuum with your finger.

Port name	At idle	3,500 rpm or more
E	No vacuum	Vacuum
R	No vacuum	Vacuum

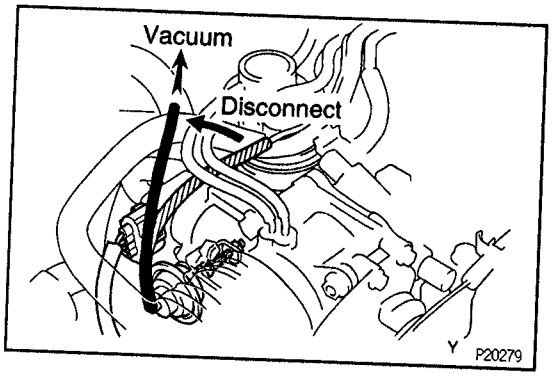

2. INSPECT THROTTLE POSITION SENSOR

(a) Apply vacuum to the throttle opener.

(b) Disconnect the sensor connector.

(c) Using an ohmmeter, measure the resistance between each terminal.

Throttle valve condition	Between terminals	Resistance
Fully closed	VTA – E2	0.28 – 6.4 kΩ
Fully closed	IDL – E2	0.5 kΩ or less
Open	IDL – E2	Infinity
Fully open	VTA – E2	2.0 – 11.6 kΩ
–	VC – E2	2.7 – 7.7 kΩ

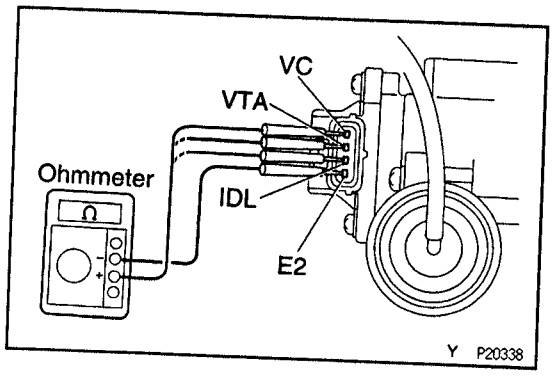

(d) Reconnect the sensor connector.

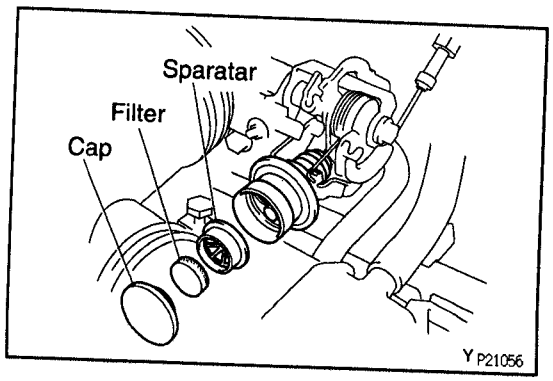

3. M/T:

INSPECT DASHPOT (DP)

A. Warm up engine

Allow the engine to warm up to normal operating temperature.

B. Check idle speed

Idle speed:

700 ± 50 rpm

C. Remove cap, filter and separator from DP

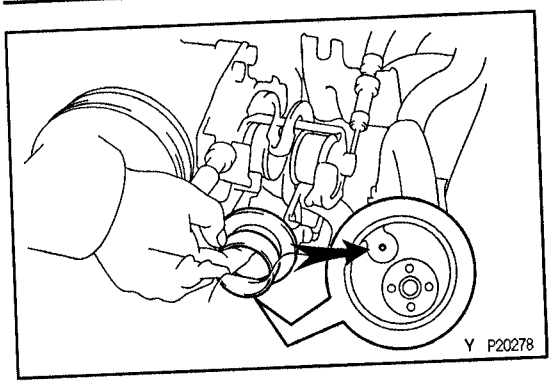

D. Check and adjust DP setting speed

(a) Maintain engine speed at 2,500 rpm or more.

(b) Plug the VTV hole with your finger.

(c) Release the throttle valve.

(d) Check the DP is set.

DP setting speed:

1,800 – 2,200 rpm

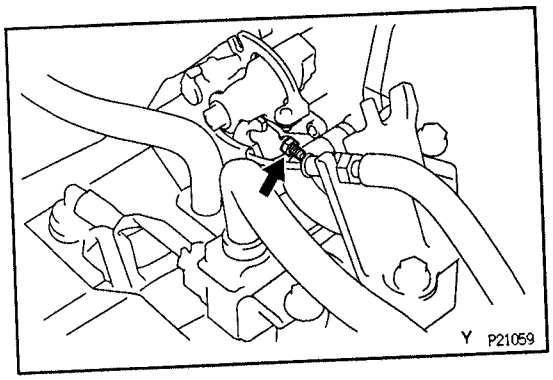

(e) If the setting speed is not as specified, adjust it with the DP adjusting screw.

E. Check operation of VTV

(a) Set the DP setting speed in the same procedure as above; (a) to (c).

(b) Remove your finger from the hole and check that the engine returns to idle speed in approx. 1 second.

F. Reinstall DP separator, filter and cap

HINT: Install the filter with the coarser surface facing the atmospheric side (outward).

4. INSPECT THROTTLE OPENER

A. Warm up engine

Allow the engine to warm up to normal operating temperature.

B. Check idle speed

Idle speed:

700 ± 50 rpm

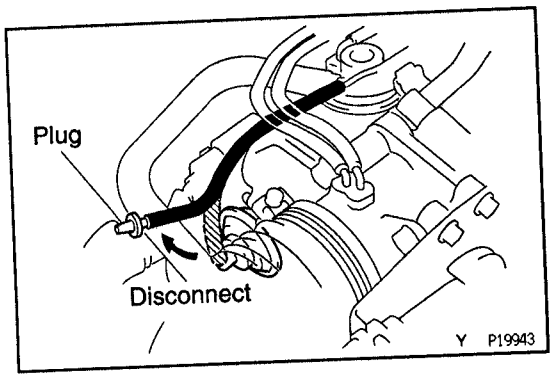

C. Check throttle opener setting speed

(a) Disconnect the vacuum hose from the throttle opener, and plug the hose end.

(b) Check the throttle opener setting speed.

Throttle opener setting speed:

900 – 1,950 rpm

If the throttle opener setting is not as specified, replace the throttle body.

(c) Stop the engine.

(d) Reconnect the vacuum hose to the throttle opener.

(e) Start the engine and check that the idle speed returns to the correct speed.

COMPONENTS FOR REMOVAL AND INSTALLATION

EG13G–14

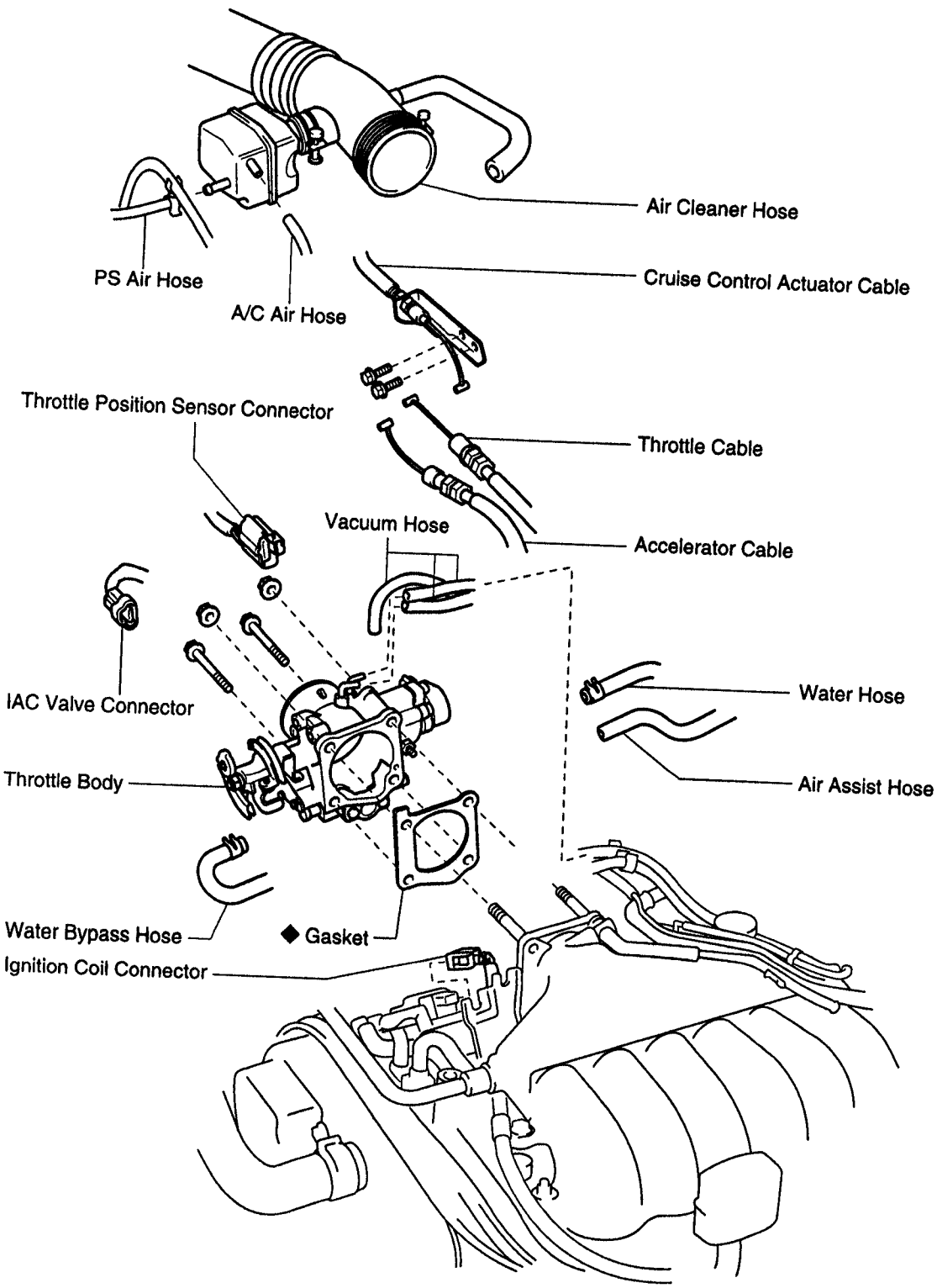

◆ Non-reusable part

Y P21226

THROTTLE BODY REMOVAL

1. **DRAIN ENGINE COOLANT**
2. **DISCONNECT THESE CABLES:**

(a) w/ Cruise control:
Cruise control actuator cable

(b) Accelerator cable

(c) A/T:
Throttle cable

3. **REMOVE AIR CLEANER HOSE**
4. **DISCONNECT THROTTLE POSITION SENSOR CONNECTOR**
5. **DISCONNECT IAC VALVE CONNECTOR**
6. **REMOVE THROTTLE BODY**

(a) Disconnect these vacuum hoses from the throttle body:
(1) Vacuum hose of throttle opener
(2) w/ EGR:
Vacuum hose (from port R of EGR vacuum modulator)
(3) w/ EGR:
Vacuum hose (from port E of EGR vacuum modulator)

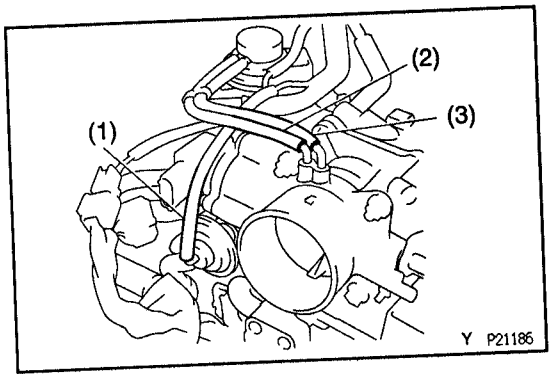

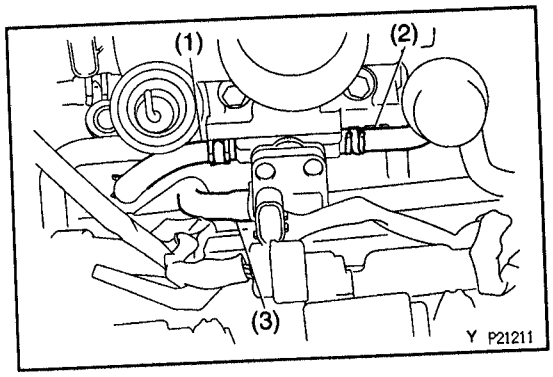

(b) Disconnect these hoses from the IAC valve:
(1) Water bypass hose (w/ EGR: from EGR valve, w/o EGR: from water bypass pipe)
(2) Water hose (from intake manifold)
(3) Air assist hose

(c) Disconnect the ignition coil connector.

(d) Remove the 2 bolts, 2 nuts, throttle body and gasket.

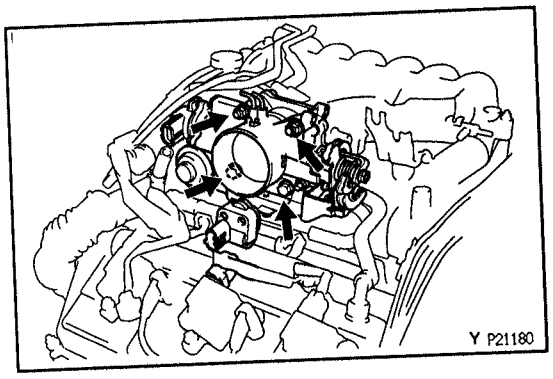

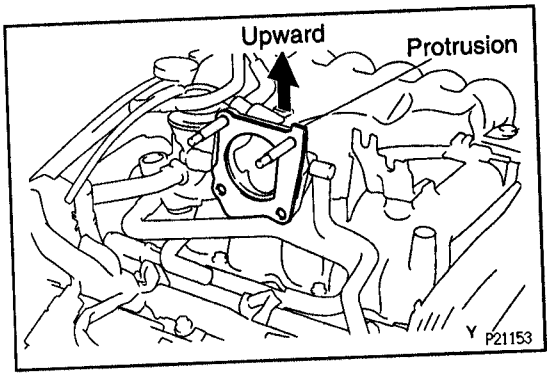

INSTALLATION HINT: Place a new gasket on the air intake chamber facing the protrusion upward.

Torque: 18 N·m (180 kgf·cm, 13 ft·lbf)

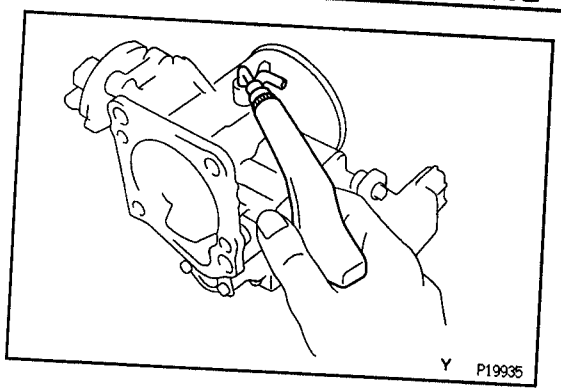

THROTTLE BODY INSPECTION

EGSAD–03

1. CLEAN THROTTLE BODY

(a) Using a soft brush and carburetor cleaner, clean the cast parts.

(b) Using compressed air, clean all the passages and apertures.

NOTICE: To prevent deterioration, do not clean the throttle position sensor and IAC valve.

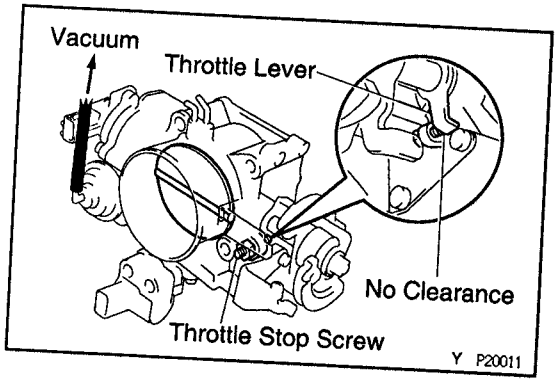

2. INSPECT THROTTLE VALVE

(a) Apply vacuum to the throttle opener.

(b) Check that there is no clearance between the throttle stop screw and throttle lever when the throttle valve is fully closed.

Throttle valve fully closed angle: 10°

EG

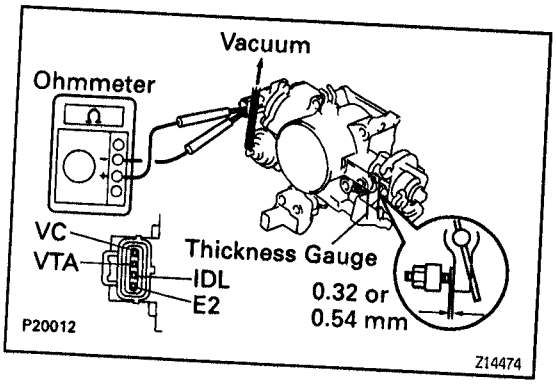

3. INSPECT THROTTLE POSITION SENSOR

(a) Apply vacuum to the throttle opener.

(b) Insert a thickness gauge between the throttle stop screw and stop lever.

(c) Using an ohmmeter, measure the resistance between each terminal.

Clearance between lever and stop screw	Between terminals	Resistance
0 mm (0 in.)	VTA – E2	0.28 – 6.4 kΩ
0.32 mm (0.013 in.)	IDL – E2	0.5 kΩ or less
0.54 mm (0.021 in.)	IDL – E2	Infinity
Throttle valve fully open	VTA – E2	2.0 – 11.6 kΩ
–	VC – E2	2.7 – 7.7 kΩ

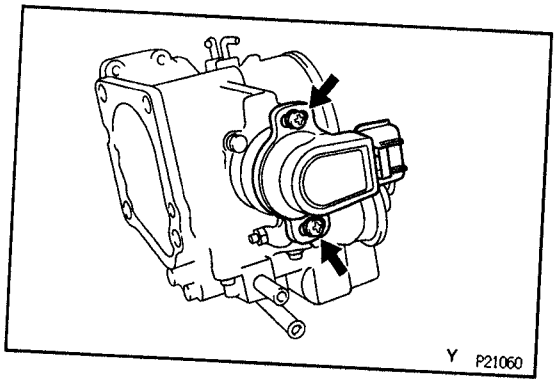

4. IF NECESSARY, ADJUST THROTTLE POSITION SENSOR

(a) Loosen the 2 set screws of the sensor.

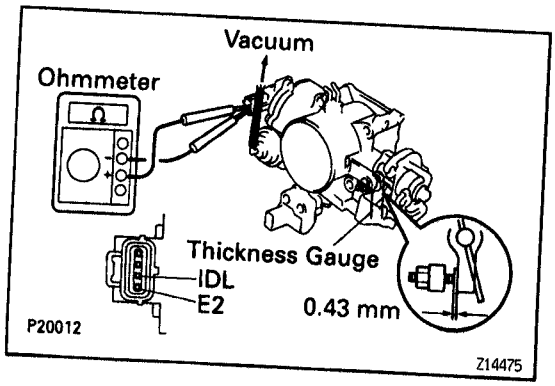

(b) Apply vacuum to the throttle opener.

(c) Insert a 0.43 mm (0.017 in.) thickness gauge, between the throttle stop screw and stop lever.

(d) Connect the test probe of an ohmmeter to the terminals IDL and E2 of the sensor.

(e) Gradually turn the sensor clockwise until the ohmmeter deflects, and secure it with the 2 set screws.

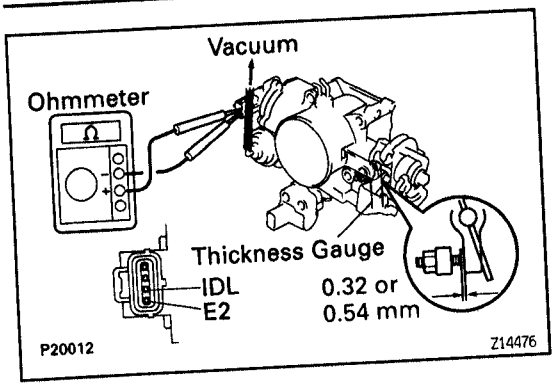

(f) Recheck the continuity between terminals IDL and E2.

Clearance between lever and stop screw	Continuity (IDL – E2)
0.32 mm (0.013 in.)	Continuity
0.54 mm (0.021 in.)	No continuity

EG066V-01

THROTTLE BODY INSTALLATION

Installation is in the reverse order of removal

EG

IDLE AIR CONTROL (IAC) VALVE ON-VEHICLE INSPECTION

EG066W-01

1. INSPECT IAC VALVE OPERATION

(a) Initial conditions:
- Engine at normal operating temperature
- Idle speed checked correctly
- Transmission in neutral position
- A/C switch OFF

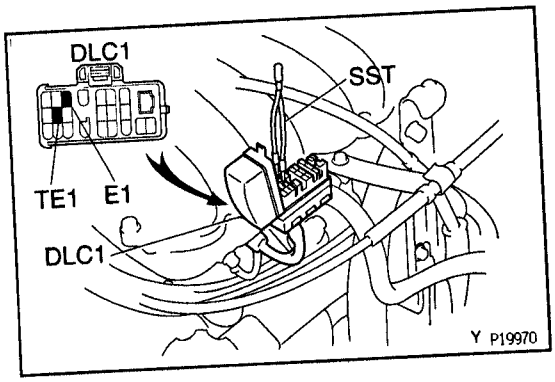

(b) Using SST, connect terminals TE1 and E1 of the DLC1.
SST 09843-18020

(c) After engine speed is kept at approx. 1,000 rpm for 5 seconds, check that it returns to idle speed.
If the engine speed operation is not as specified, check the IAC valve, wiring and ECM.

(d) Remove the SST from the DLC1.
SST 09843-18020

2. INSPECT IAC VALVE RESISTANCE

NOTICE: "Cold" and "Hot" in the following sentences express the temperature of the coils themselves. "Cold" is from -10°C (14°F) to 50°C (122°F) and "Hot" is from 50°C (122°F) to 100°C (212°F).

(a) Disconnect the IAC valve connector.

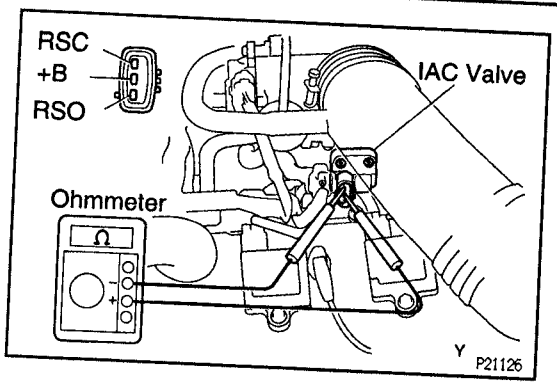

(b) Using an ohmmeter, measure the resistance between terminal +B and other terminals (RSC, RSO).

Resistance:

Cold: 17.0 – 24.5 Ω

Hot: 21.5 – 28.5 Ω

If resistance is not as specified, replace the IAC valve.

(c) Reconnect the IAC valve connector.

3. INSPECT AIR ASSIST SYSTEM

(a) Initial conditions:

- Engine at normal operating temperature
- Idle speed checked correctly
- Transmission in neutral position
- A/C switch OFF

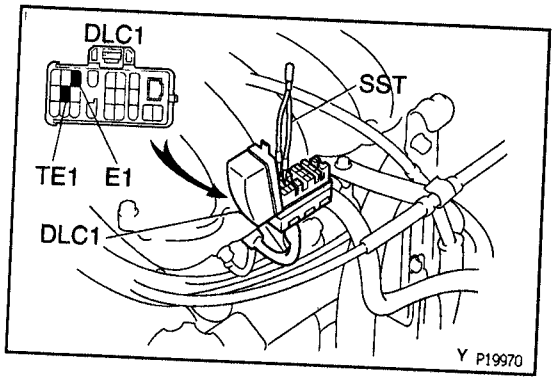

(b) Using SST, connect terminals TE1 and E1 of the DLC1.

SST 09843–18020

(c) After engine speed is kept at 900 – 1,300 rpm for 10 seconds, check that it returns to idle speed.

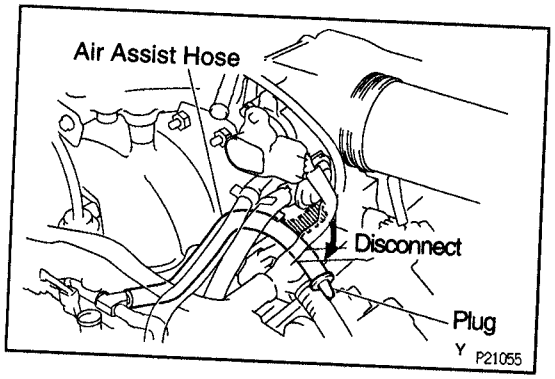

(d) Stop the engine.

(e) Disconnect the air assist hose from the IAC valve, and plug it.

(f) Start the engine and check that the idle speed reaches 500 rpm or below (the engine may stall).

If the idle does not reach 500 rpm or below, check for a leak between the air assist hoses, pipe and injectors.

(g) Remove the SST from the DLC1.

SST 09843–18020

(h) Reconnect the air assist hose to the IAC valve.

EG

EG13R-08

COMPONENTS FOR REMOVAL AND INSTALLATION

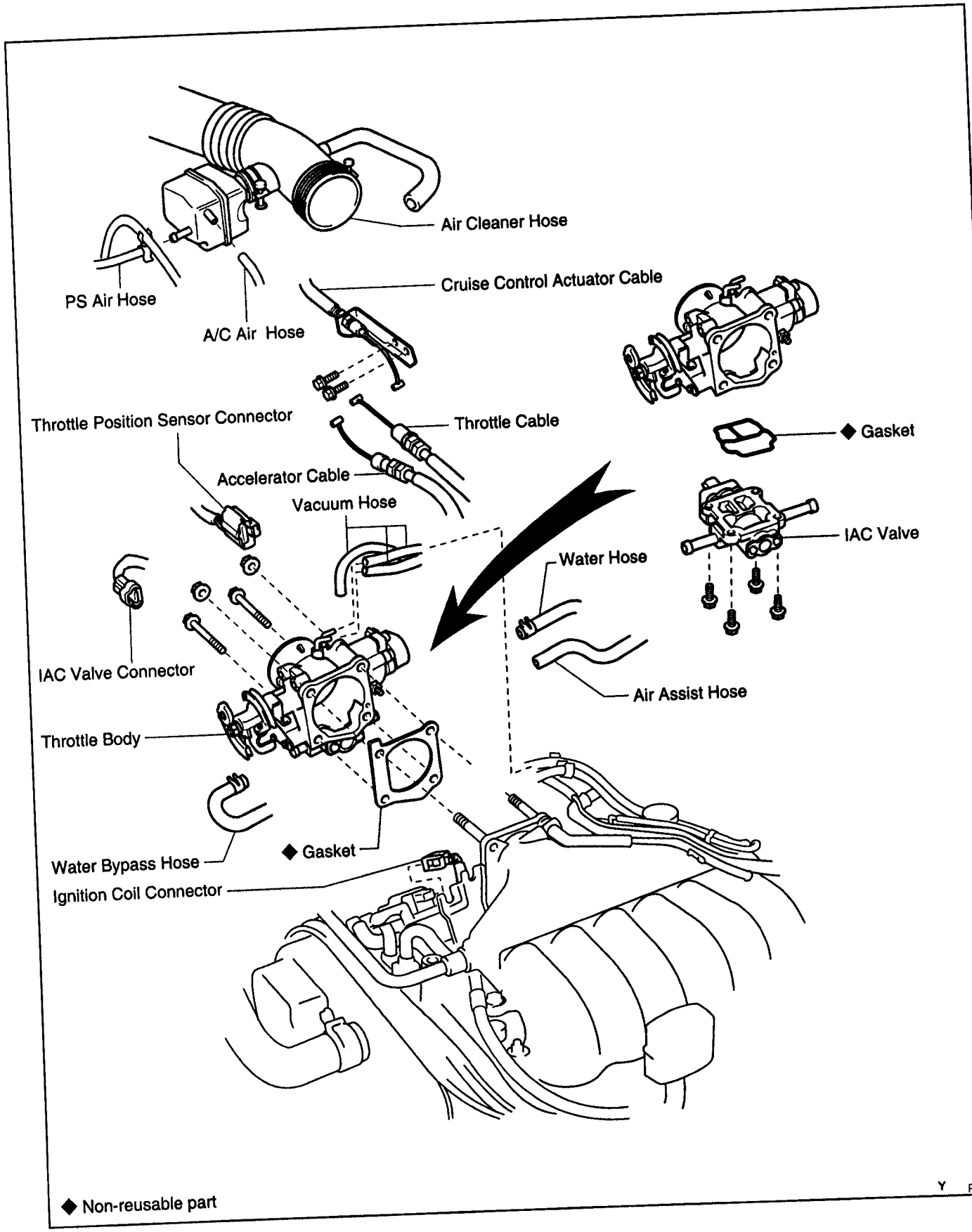

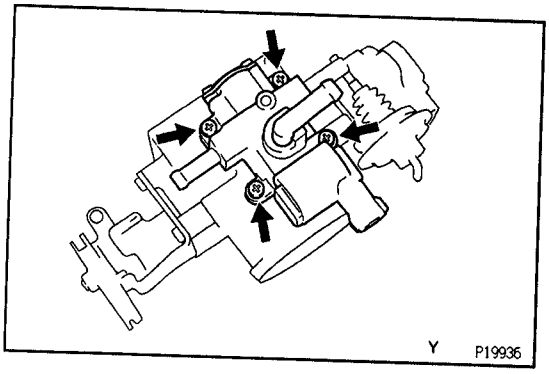

IAC VALVE REMOVAL

EG13S–0M

1. **REMOVE THROTTLE BODY**
   (See throttle body removal)
2. **REMOVE IAC VALVE**
   Remove the 4 screws, IAC valve and gasket.
   INSTALLATION HINT: Place a new gasket on the throttle body.

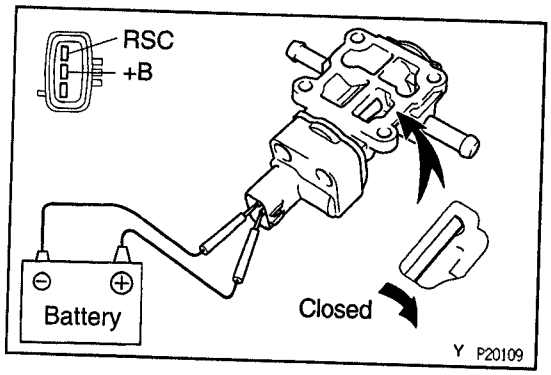

IAC VALVE INSPECTION

EG0DN–0U

EG

INSPECT IAC VALVE OPERATION

(a) Connect the positive (+) lead from the battery to terminal +B and negative (–) lead to terminal RSC, and check that the valve is closed.

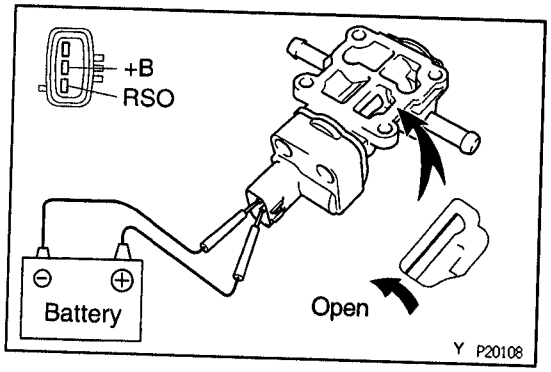

(b) Connect the positive (+) lead from the battery to terminal +B and negative (–) lead to terminal RSO, and check that the valve is open.
If operation is not as specified, replace the IAC valve.

IAC VALVE INSTALLATION

EG66X–01

Installation is in the reverse order of removal.

EFI MAIN RELAY

EFI MAIN RELAY INSPECTION

EG66Y–01

1. **REMOVE EFI MAIN RELAY**

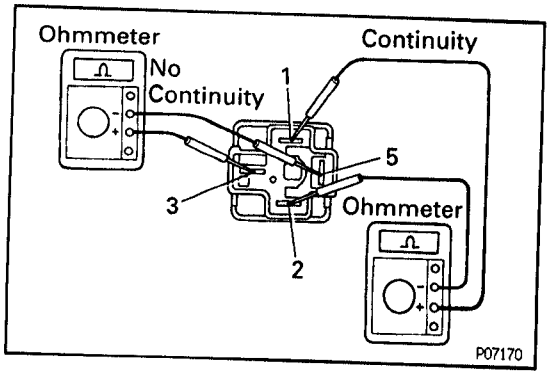

2. **INSPECT EFI MAIN RELAY**

A. Inspect relay continuity

(a) Using an ohmmeter, check that there is continuity between terminals 1 and 2.
If there is no continuity, replace the relay.

(b) Check that there is no continuity between terminals 3 and 5.
If there is continuity, replace the relay.

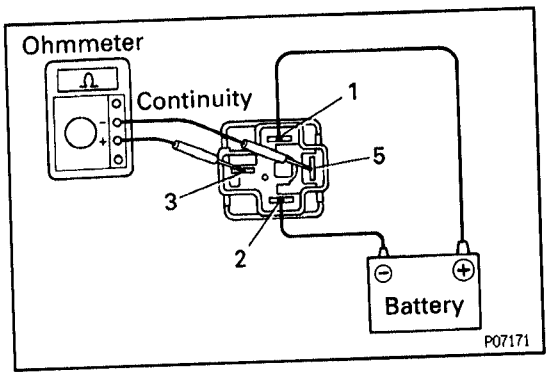

B. Inspect relay operation

(a) Apply battery positive voltage across terminals 1 and 2.

(b) Using an ohmmeter, check that there is continuity between terminals 3 and 5.
If operation is not as specified, replace the relay.

3. REINSTALL EFI MAIN RELAY

EG

CIRCUIT OPENING RELAY COMPONENTS FOR REMOVAL AND INSTALLATION

EG0HM-0C

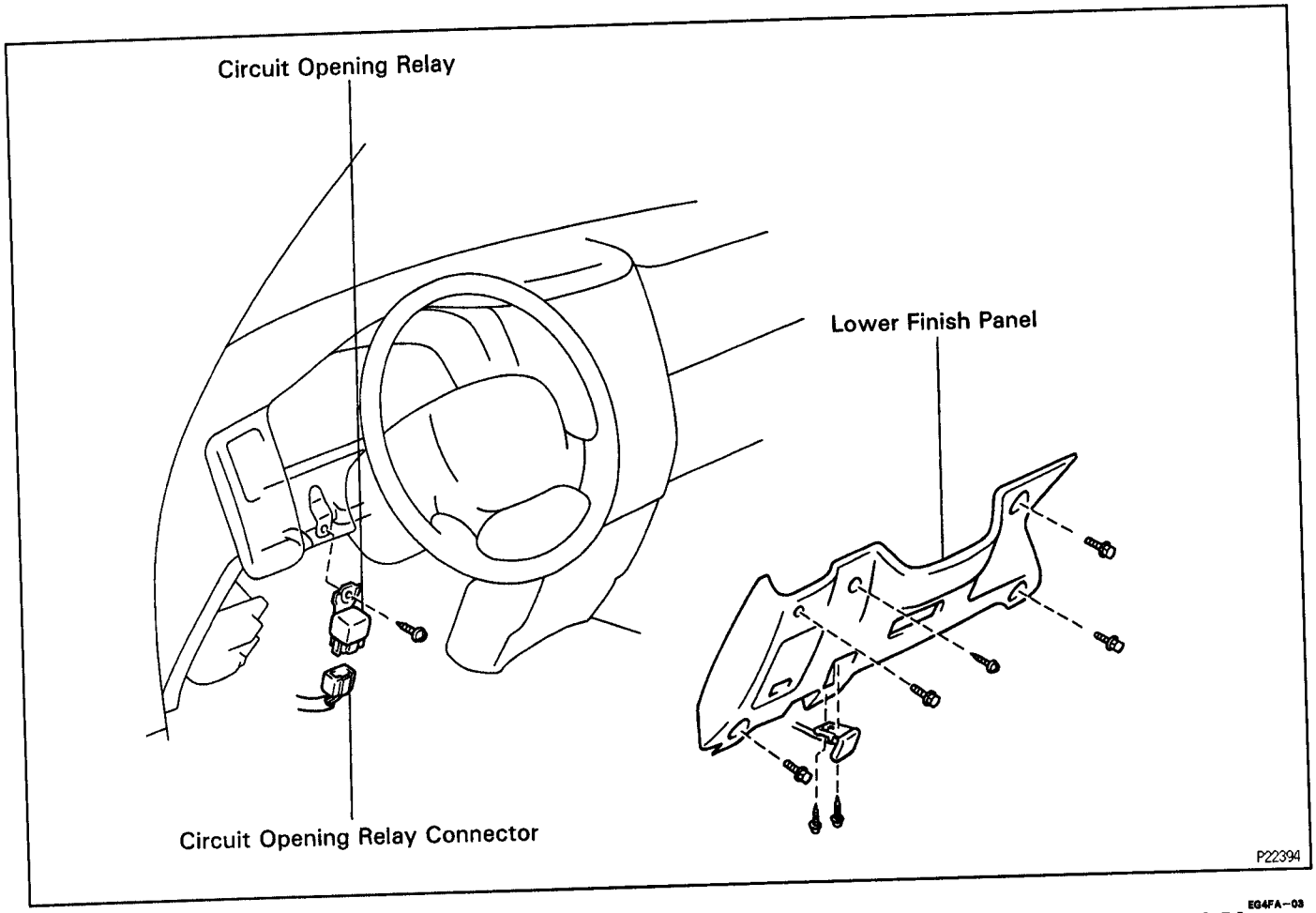

CIRCUIT OPENING RELAY INSPECTION

EG4FA-03

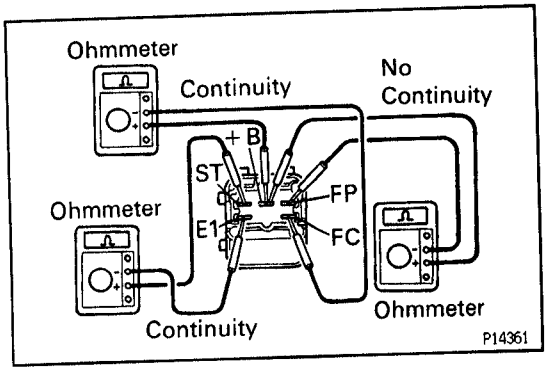

1. REMOVE CIRCUIT OPENING RELAY

2. INSPECT CIRCUIT OPENING RELAY

A. Inspect relay continuity

(a) Using an ohmmeter, check that there is continuity between terminals ST and E1.
If there no continuity, replace the relay.

(b) Check that there is continuity between terminals +B and FC.
If there no continuity, replace the relay.
(c) Check that there is no continuity between terminals +B and FP.
If there no continuity, replace the relay.

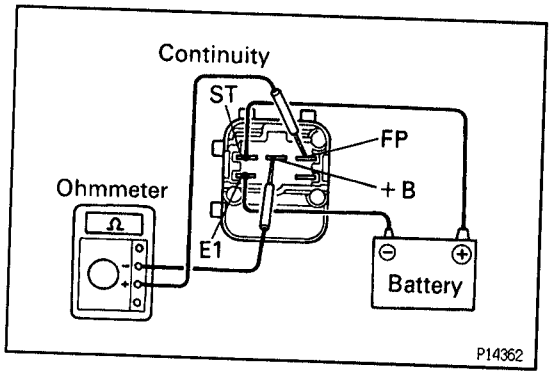

B. Inspect relay operation
(a) Apply battery positive voltage across terminals ST and E1.
(b) Using an ohmmeter, check that there is continuity between terminals +B and FP.
If operation is not as specified, replace the relay.

3. REINSTALL CIRCUIT OPENING RELAY

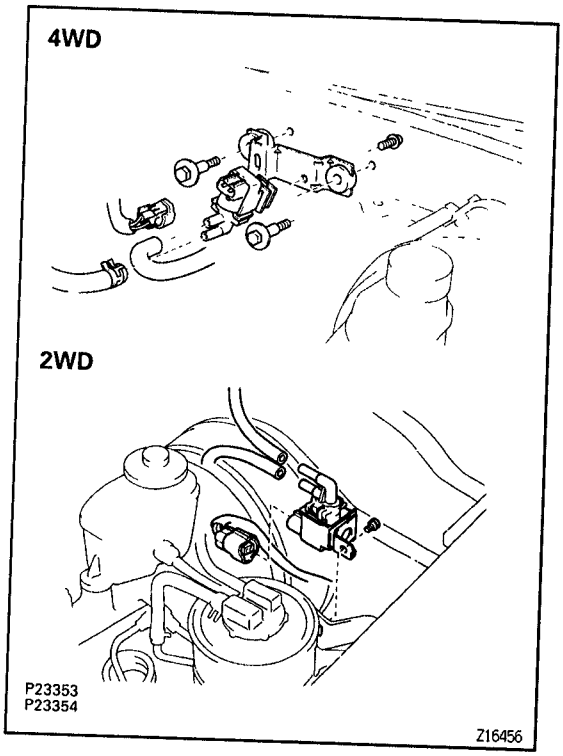

VSV FOR EVAP

VSV INSPECTION

EG67P–01

1. REMOVE VSV
Disconnect the connector and 2 EVAP hoses, and remove the screw and VSV.

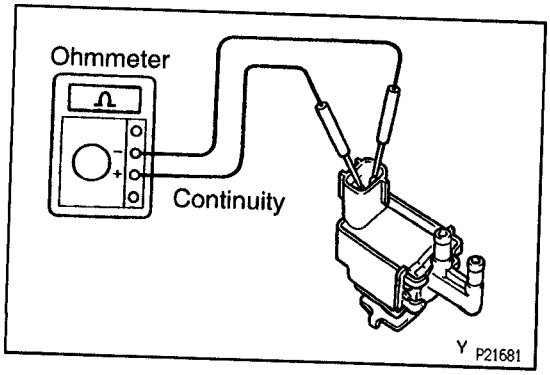

2. INSPECT VSV
A. Inspect VSV for open circuit
Using an ohmmeter, check that there is continuity between the terminals.
Resistance:
At 20°C (68°F): 30 – 34 Ω
If there is no continuity, replace the VSV.

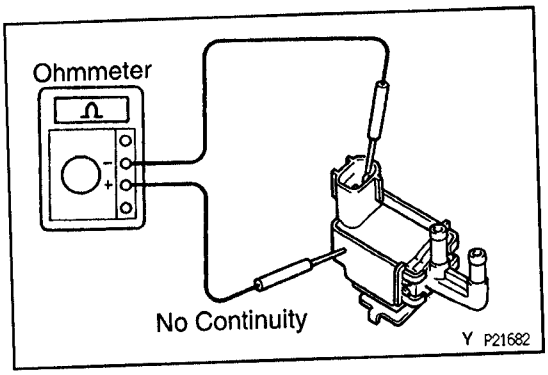

B. Inspect VSV for ground

Using an ohmmeter, check that there is no continuity between each terminal and the body.
If there is continuity, replace the VSV.

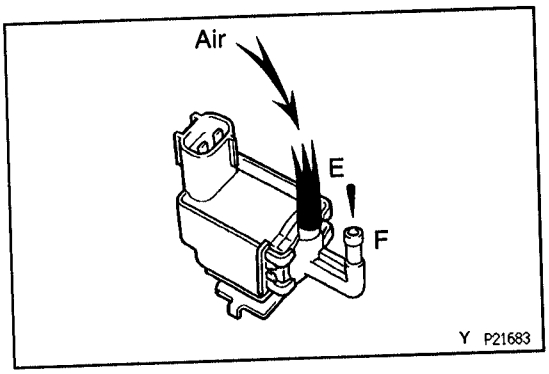

C. Inspect VSV operation

(a) Check that air does not flow from port E to port F.

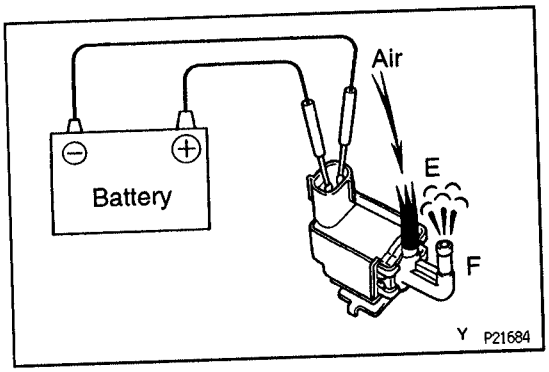

(b) Apply battery positive voltage across the terminals.
(c) Check that air flows from port E to port F.
If operation is not as specified, replace the VSV.

3. REINSTALL VSV

(a) Install the VSV with the screw.
(b) Connect the connector and 2 EVAP hoses to the VSV.

VSV FOR FUEL PRESSURE CONTROL EGSPG-01

VSV INSPECTION

1. REMOVE VSV ASSEMBLY

(a) w/ EGR:
Disconnect the 2 connectors and 4 vacuum hoses, and remove the 2 bolts and VSV assembly.

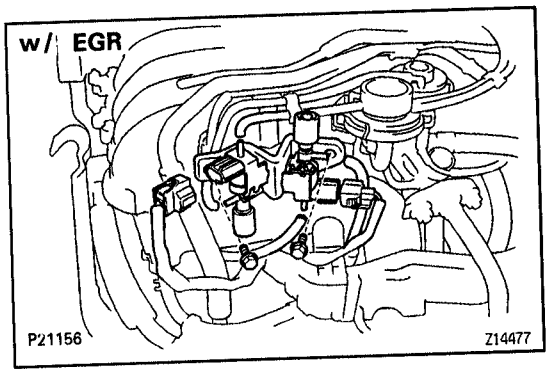

(b) w/o EGR:
Disconnect the connector and 2 vacuum hoses, and remove the 2 bolts and VSV assembly.

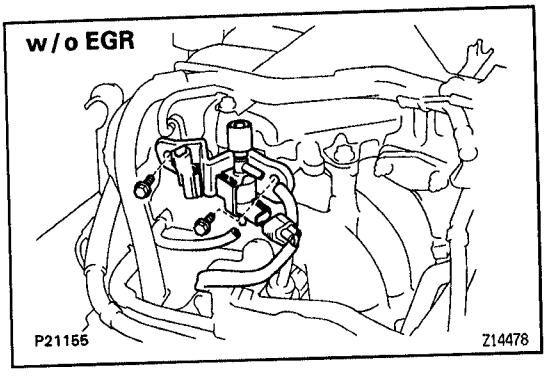

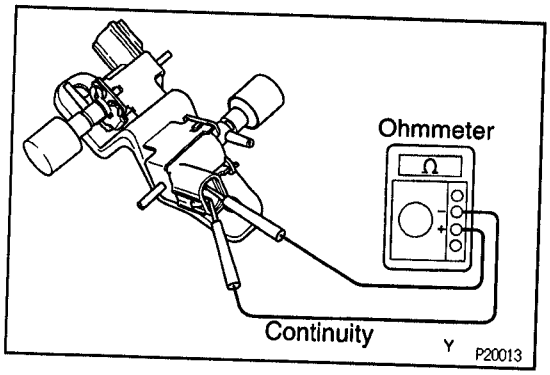

3. INSPECT VSV

A. Inspect VSV for open circuit

Using an ohmmeter, check that there is continuity between the terminals.

Resistance:

At 20°C (68°F): 33 – 39 Ω

If there is no continuity, replace the VSV.

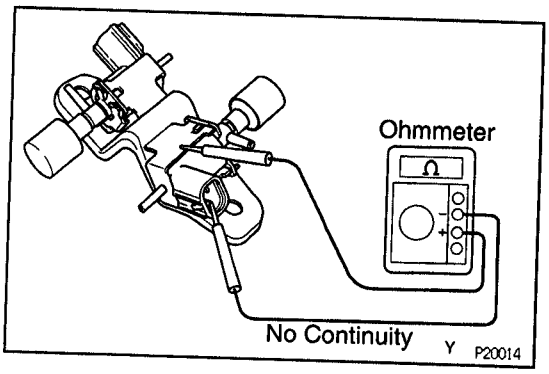

B. Inspect VSV for ground

Using an ohmmeter, check that there is no continuity between each terminal and the body.

If there is continuity, replace the VSV.

EG

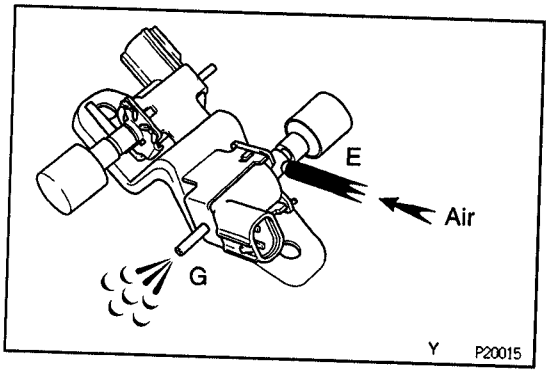

C. Inspect VSV operation

(a) Check that air flows from port E to port G.

(b) Apply battery positive voltage across the terminals.

(c) Check that air flows from port E to the filter.

If operation is not as specified, replace the VSV.

3. REINSTALL VSV ASSEMBLY

(a) Install the VSV assembly with the 2 bolts.

Torque: 8 N·m (80 kgf·cm 71 in.·lbf)

(b) w/ EGR:

Connect the 2 connectors and 4 vacuum hoses to the 2 VSV.

(c) w/o EGR:

Connect the connector and 2 vacuum hoses to the VSV.

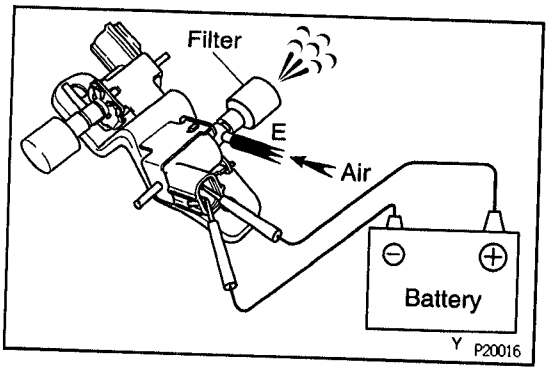

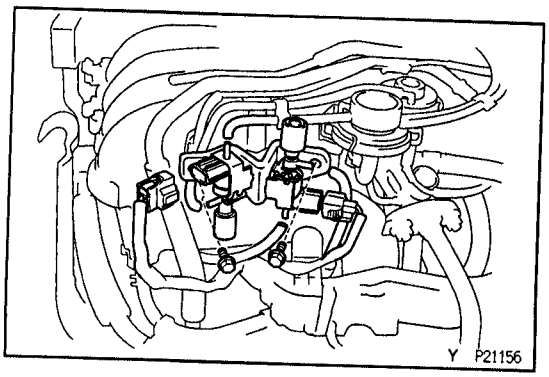

VSV FOR EGR (2WD/0.5 ton)

VSV INSPECTION

EG5AJ–01

1. REMOVE VSV ASSEMBLY

Disconnect the 2 connectors and 4 vacuum hoses, and remove the 2 bolts and VSV assembly.

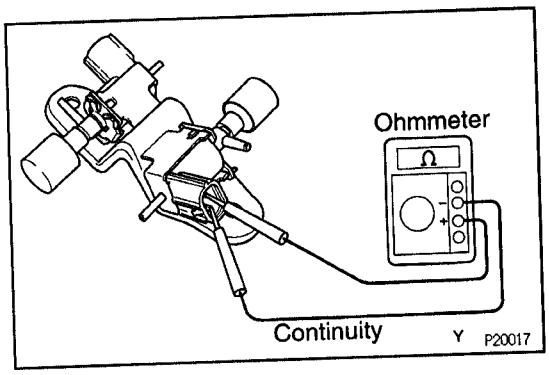

2. INSPECT VSV

A. Inspect VSV for open circuit

Using an ohmmeter, check that there is continuity between the terminals.

Resistance:

At 20°C (68°F): 33 – 39 Ω

If there is no continuity, replace the VSV.

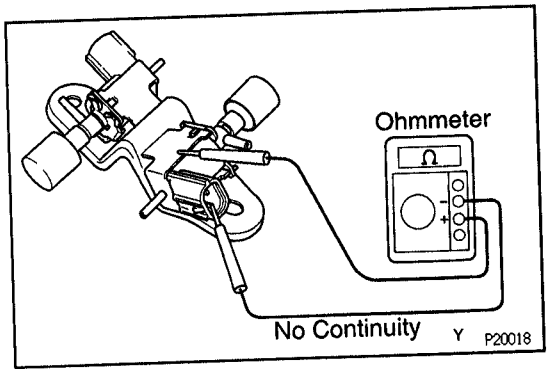

B. Inspect VSV for ground

Using an ohmmeter, check that there is no continuity between each terminal and the body.

If there is continuity, replace the VSV.

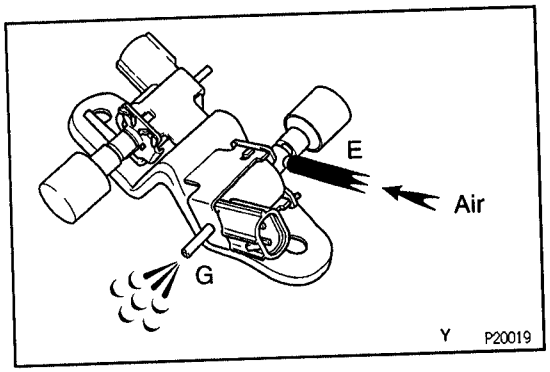

C. Inspect VSV operation

(a) Check that air flows from port E to port G.

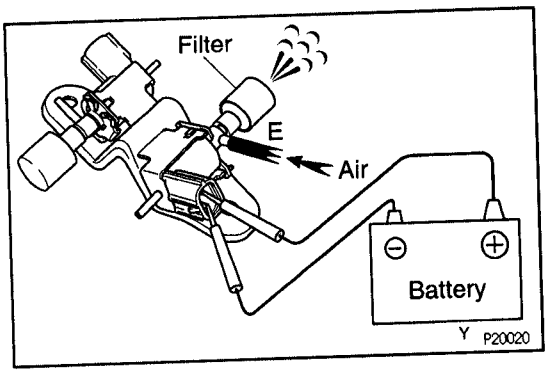

(b) Apply battery positive voltage across the terminals.

(c) Check that air flows from port E to the filter.

If operation is not as specified, replace the VSV.

3. REINSTALL VSV ASSEMBLY

(a) Install the VSV assembly with the 2 bolts.

Torque: 8 N·m (80 kgf·cm 71 in.·lbf)

(b) Connect the 2 connectors and 4 vacuum hoses to the 2 VSV.

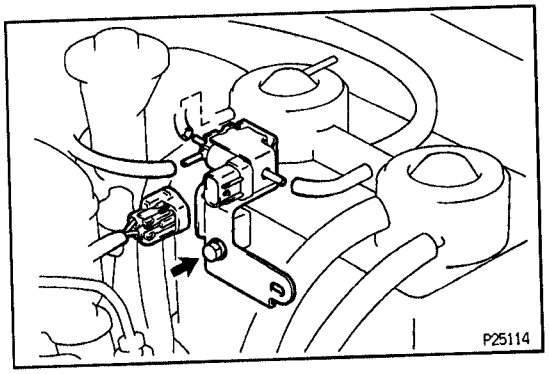

VSV FOR VAPOR PRESSURE SENSOR

EG66Z-01

4WD only:

VSV INSPECTION

1. REMOVE VSV

(a) Disconnect the connector and 3 EVAP hoses from the VSV.

(b) Remove the bolt and VSV.

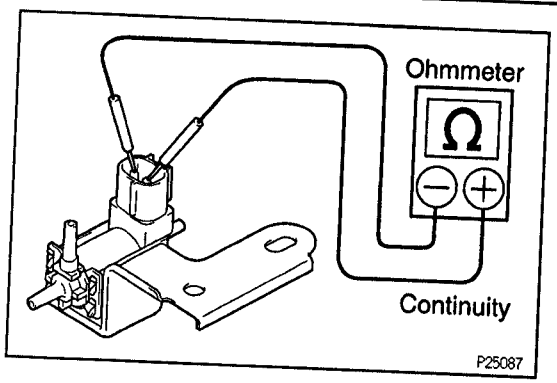

2. INSPECT VSV

A. Inspect VSV for open circuit

Using an ohmmeter, check that there is continuity between the terminals.

Resistance:

At 20°C (68°F): 37 – 44Ω

If there is no continuity, replace the VSV.

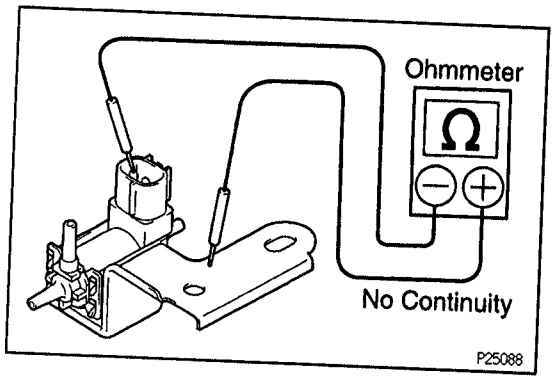

B. Inspect VSV for ground

Using an ohmmeter, check that there is no continuity between each terminal and the body.

If there is continuity, replace the VSV.

EG

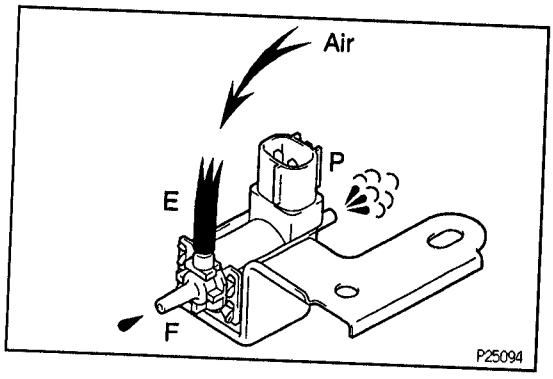

C. Inspect VSV operation

(a) Check that air flows from ports E to P, and does not flow from ports E to F.

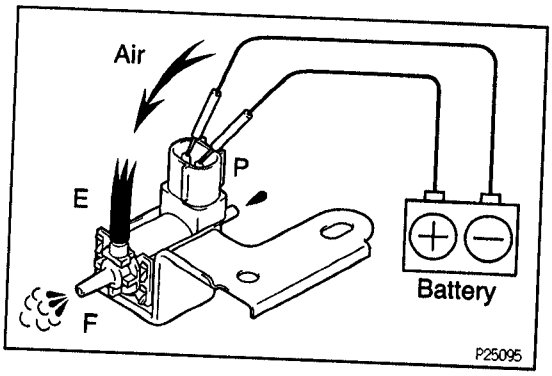

(b) Apply battery voltage across the terminals.

(c) Check that air flows from ports E to F, and does not flow from ports E to P.

If operation is not as specified, replace the VSV.

3. REINSTALL VSV

A/C IDLE–UP VALVE (w/ A/C)

ON–VEHICLE INSPECTION

EG5AK–02

INSPECT A/C IDLE–UP VALVE OPERATION

(a) Initial conditions:

- Engine at normal operating temperature
- Idle speed set correctly
- Transmission in neutral position

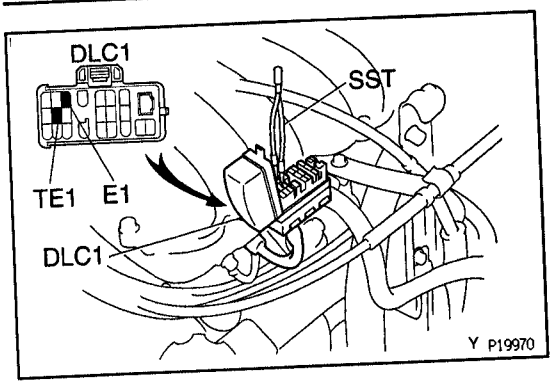

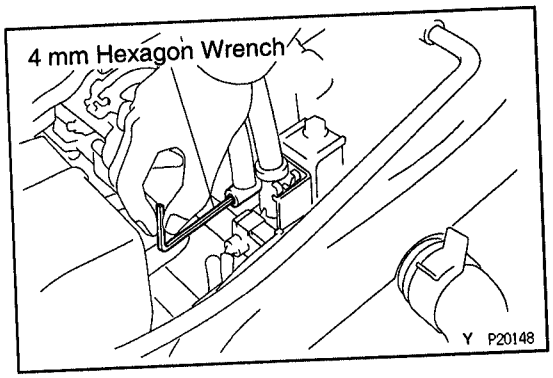

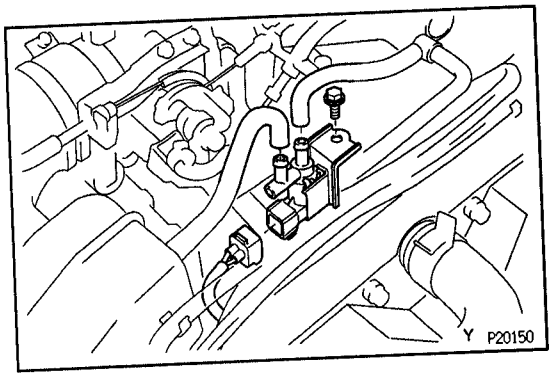

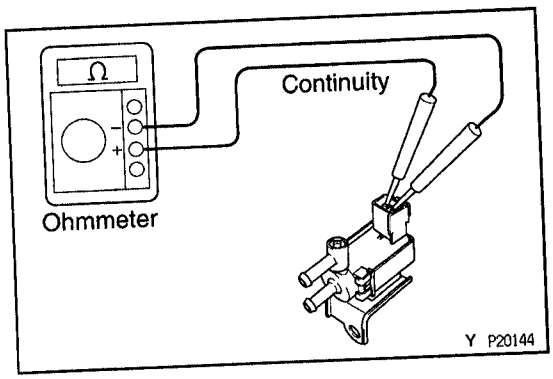

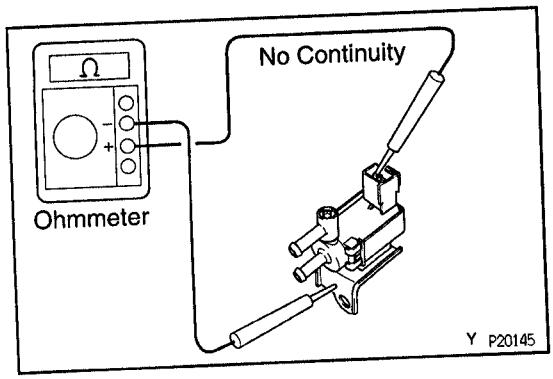

- A/C switch ON

(b) Using SST, connect terminals TE1 and E1 of the DLC 1, check that idle-up occurs for approx. 3 seconds.
SST 09843-18020
Valve operation is faulty if during the idle-up period the engine speed drops by 100 rpm or more, rough idle occurs, or the engine stalls.

(c) Observe the idle speed for approx. 3 to 15 seconds. During this time the idle-up valve should go off, the IAC valve half-open and idle-up should occur.

(d) After approx. 15 seconds, check that the idle speed does not vary greatly from the idle speed observed in step (c). The idle-up valve should now be in ON position.
If the idle speed is increased by more 100 rpm, using a 4 mm hexagon wrench, turn the idle-up valve adjustment screw to correct the idle-up valve.

(e) Remove the SST from the DLC1.
SST 09843-18020

(f) A/C switch OFF.

EGSAL-01

A/C IDLE-UP VALVE INSPECTION

1. REMOVE A/C IDLE-UP VALVE

(a) Disconnect the idle-up valve connecter.
(b) Disconnect the 2 air hoses.
(c) Remove the 2 bolts and idle-up valve.

2. INSPECT A/C IDLE-UP VALVE

A. Inspect idle-up valve for open circuit

Using an ohmmeter, check that there is continuity between the terminals.

Resistance:

At 20°C (68°F): 30 – 34 Ω

If there is no continuity, replace the idle-up valve.

B. Inspect A/C idle-up valve for ground

Using an ohmmeter, check that there is no continuity between each terminal and the body.
If there is continuity, replace the idle-up valve.

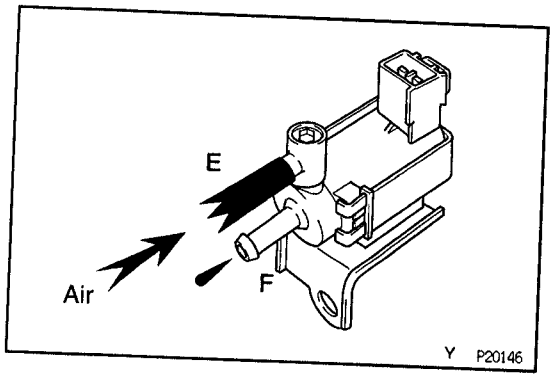

C. Inspect A/C idle–up valve operation

(a) Check that air does not flow from port E to port F.

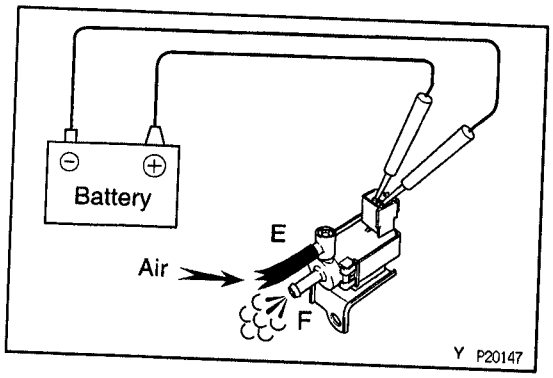

(b) Apply battery positive voltage across the terminals.

(c) Check that air flows from port E to port F.

If operation is not as specified, replace the idle–up valve.

3. REINSTALL A/C IDLE–UP VALVE

(a) Install the idle–up valve with the 2 bolts.

Torque: 20 N·m (200 kgf·cm, 15 ft·lbf)

(b) Connect the 2 air hoses.

(c) Connect the idle–valve connector.

EG

ENGINE COOLANT TEMPERATURE (ECT) SENSOR

COMPONENTS FOR REMOVAL AND INSTALLATION

EG1AC–0U

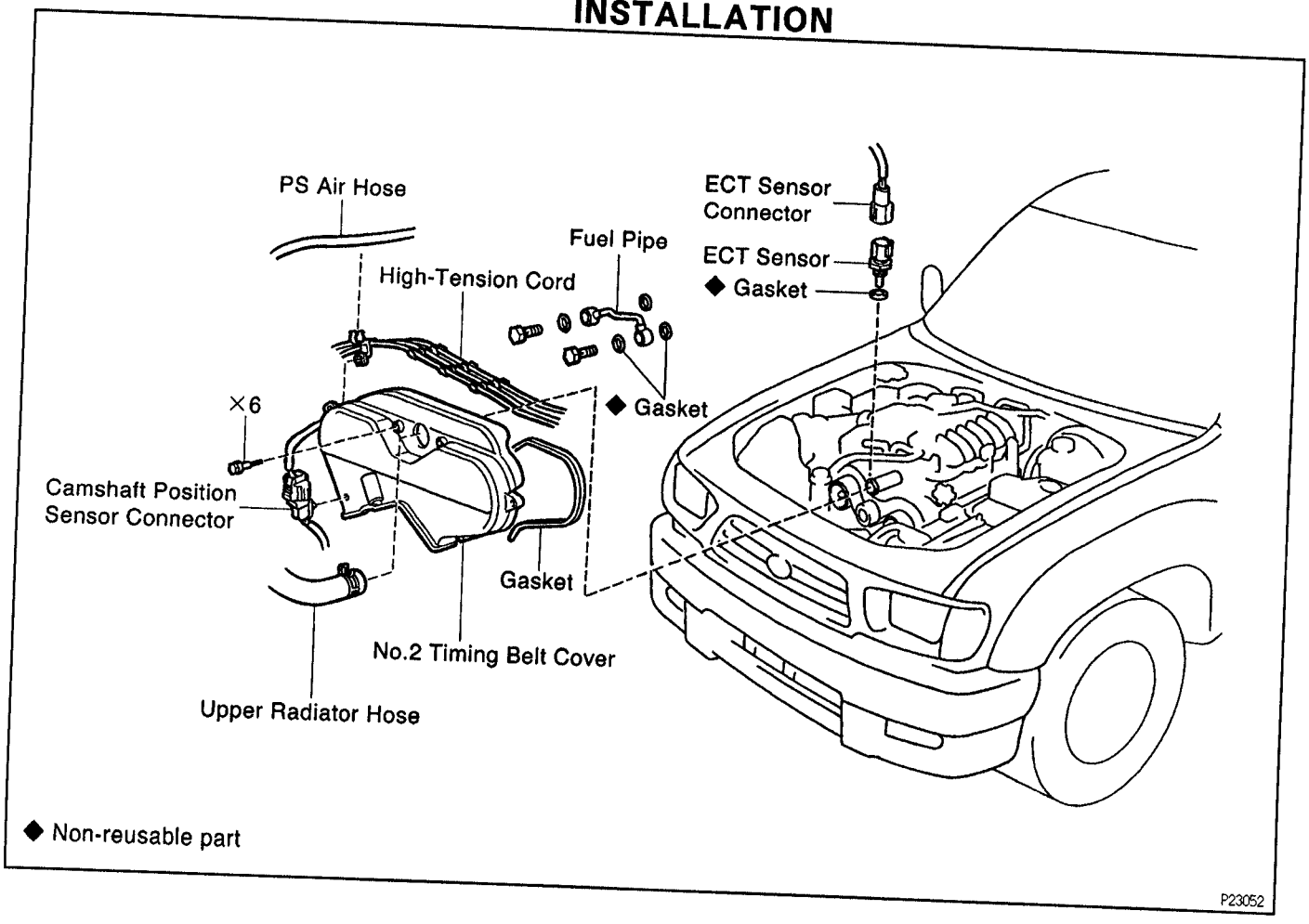

EG670-01

ECT SENSOR INSPECTION

1. DRAIN ENGINE COOLANT
2. DISCONNECT UPPER RADIATOR HOSE FROM WATER OUTLET
3. REMOVE NO.2 TIMING BELT COVER
   (See timing belt removal in Engine Mechanical)

EG

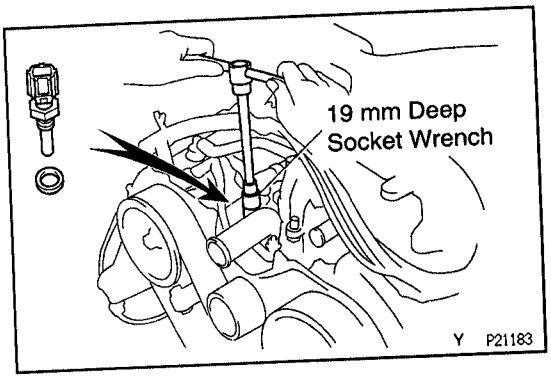

4. REMOVE FUEL PIPE
5. REMOVE ECT SENSOR
(a) Disconnect the ECT sensor connector.
(b) Using a 19 mm deep socket wrench, remove the ECT sensor and gasket.

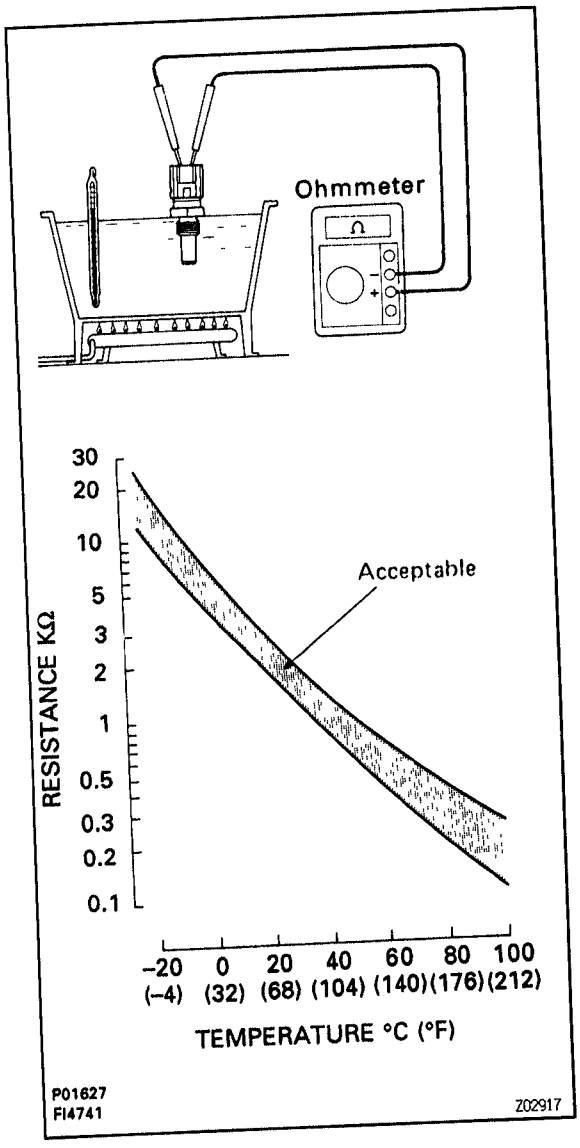

6. INSPECT ECT SENSOR
Using an ohmmeter, measure the resistance between the terminals.
Resistance:
Refer to the graph
If the resistance is not as specified, replace the ECT sensor.
7. REINSTALL ECT SENSOR
(a) Install a new gasket to the ECT sensor.
(b) Using a 19 mm deep socket, install the ECT sensor.
Torque: 20 N·m (200 kgf·cm, 14 ft·lbf)
(c) Connect the ECT sensor connector.
8. REINSTALL FUEL PIPE
Install the fuel pipe with 4 new gaskets and the 2 union bolts.
Torque: 34.3 N·m (350 kgf·cm, 25 ft·lbf)
9. REINSTALL NO.2 TIMING BELT COVER
(See timing belt installation in Engine Mechanical)
10. RECONNECT UPPER RADIATOR HOSE TO WATER OUTLET
11. REFILL WITH ENGINE COOLANT

KNOCK SENSOR

COMPONENTS FOR REMOVAL AND INSTALLATION

EG6AN–03

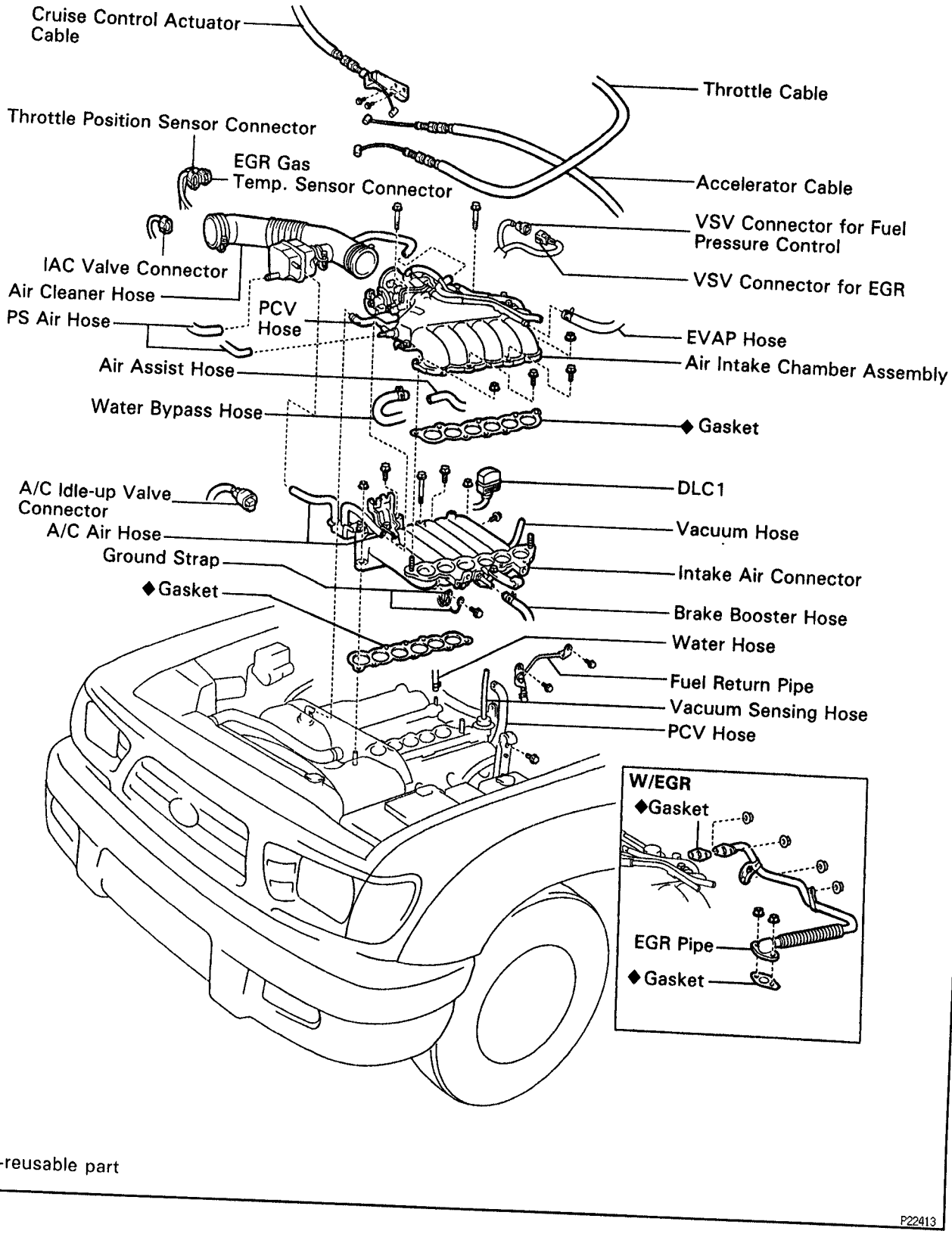

◆ Non-reusable part

P22413

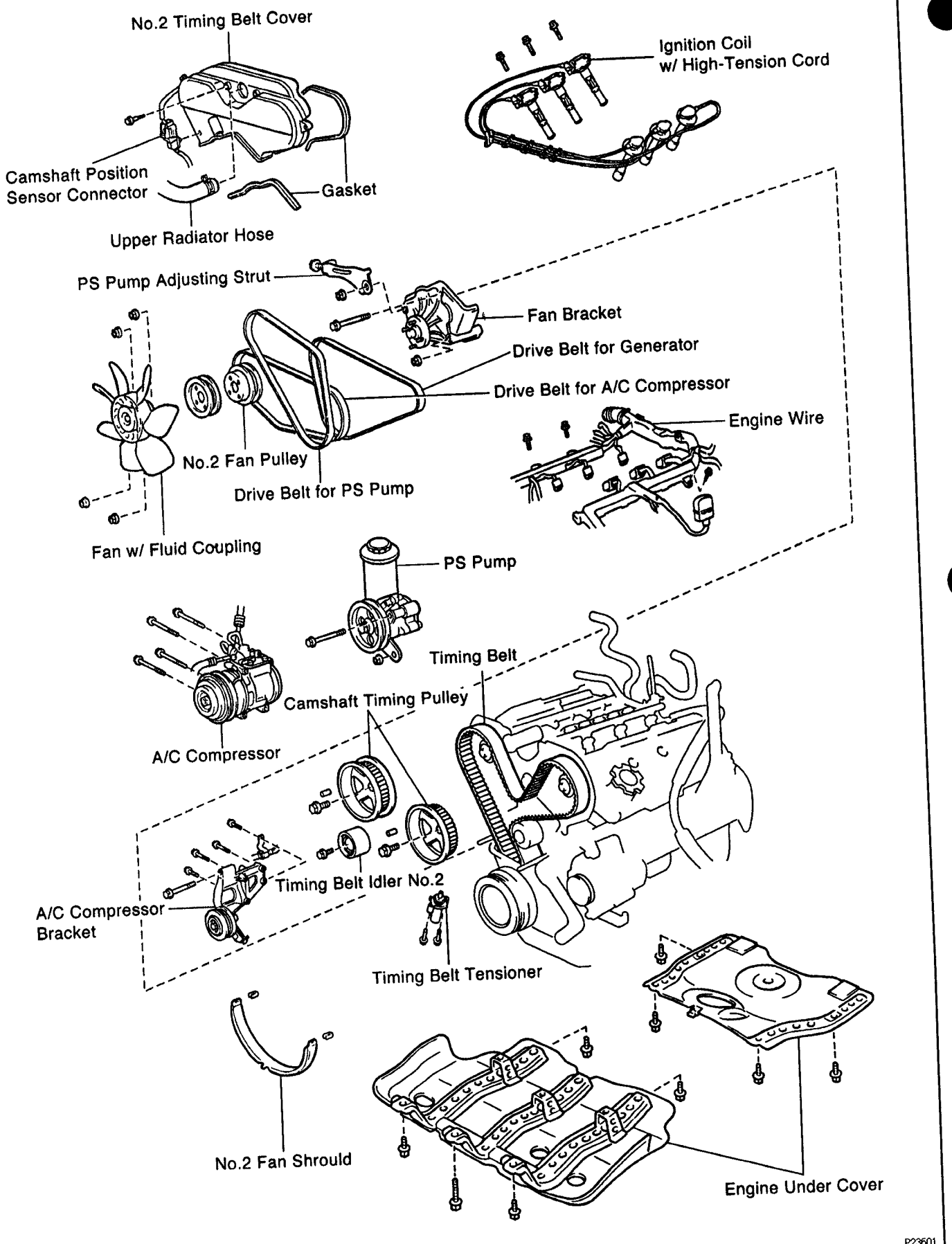
No.2 Timing Belt Cover
Ignition Coil
w/ High-Tension Cord
Camshaft Position
Sensor Connector
Gasket
Upper Radiator Hose
PS Pump Adjusting Strut
Fan Bracket
Drive Belt for Generator
Drive Belt for A/C Compressor
Engine Wire
No.2 Fan Pulley
Drive Belt for PS Pump
Fan w/ Fluid Coupling
PS Pump
Timing Belt
Camshaft Timing Pulley
A/C Compressor
Timing Belt Idler No.2
A/C Compressor
Bracket
Timing Belt Tensioner
No.2 Fan Shrould
Engine Under Cover
P23601

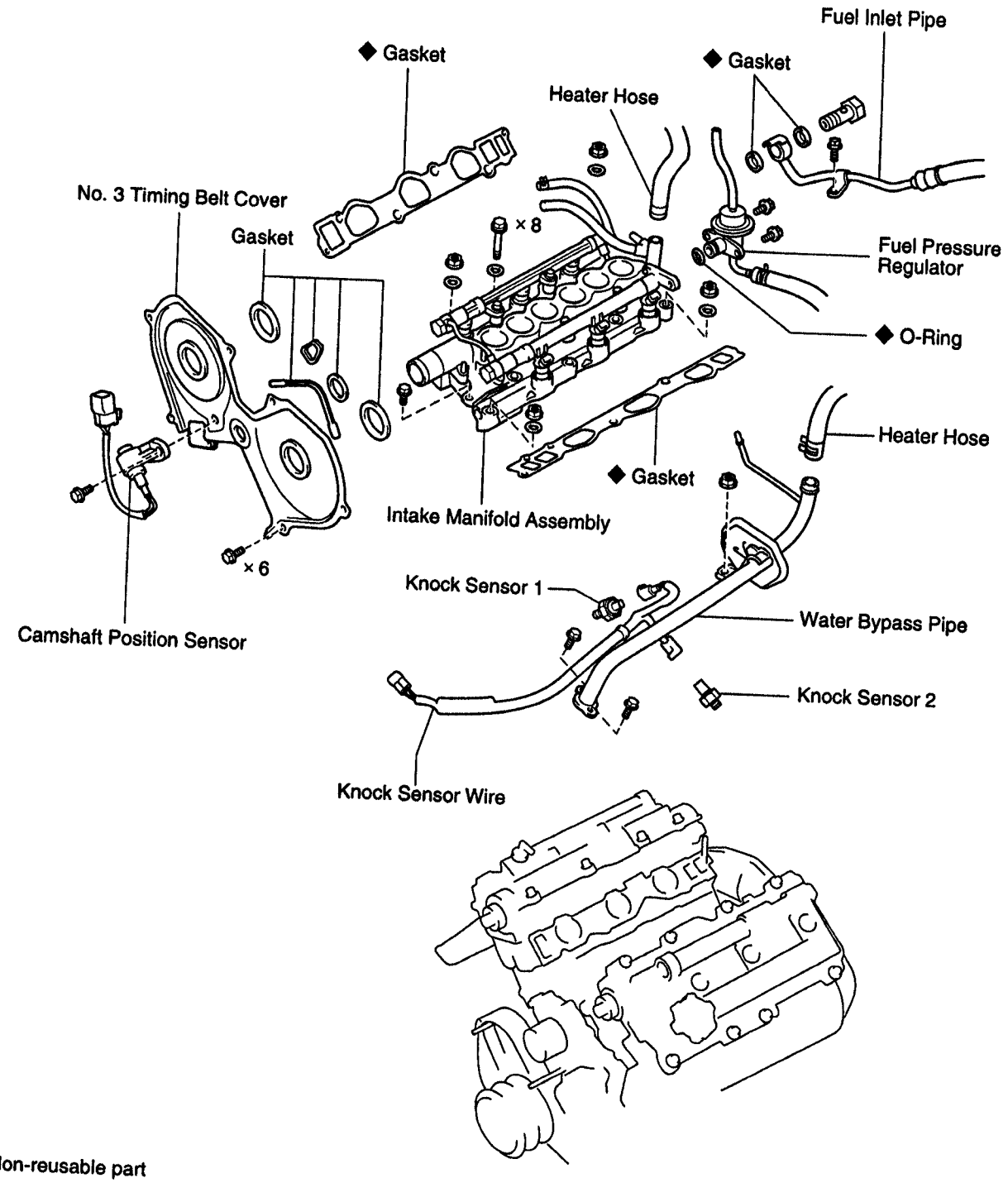

KNOCK SENSORS INSPECTION

EG672-01

1. DRAIN ENGINE COOLANT
2. REMOVE AIR CLEANER HOSE
3. REMOVE INTAKE AIR CONNECTOR
   (See steps 5 and 11 to 13 in cylinder head removal in Engine Mechanical)

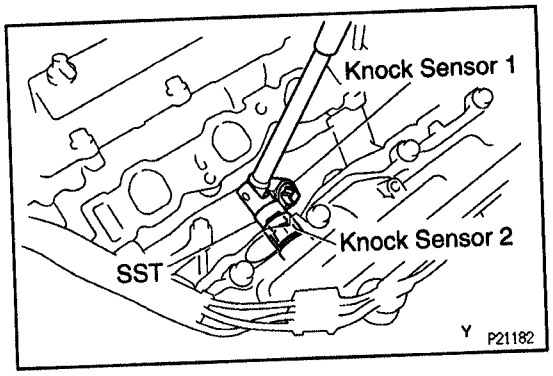

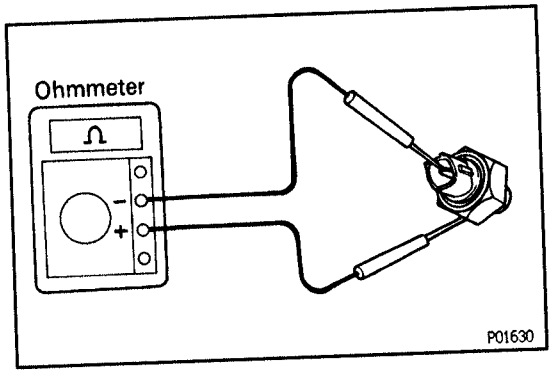

4. **REMOVE HIGH–TENSION CORDS WITH IGNITION COILS**
   (See high–tension cords with ignition coils removal in Ignition System)
5. **REMOVE TIMING BELT AND CAMSHAFT TIMING PULLEYS**
   (See steps 1 and 3 to 18 in timing belt removal in Engine Mechanical)
6. **REMOVE TIMING BELT IDLER NO.2**
7. **REMOVE FUEL PRESSURE REGULATOR**
8. **REMOVE INTAKE MANIFOLD ASSEMBLY**
   (See steps 4, 13 to 16 and 18 in cylinder head removal in Engine Mechanical)
9. **REMOVE WATER BYPASS PIPE AND KNOCK SENSOR WIRE**
   (See step 7 in cylinder block removal in Engine Mechanical)
10. **REMOVE KNOCK SENSORS**
    Using SST, remove the knock sensor.
    SST 09817–16011
11. **INSPECT KNOCK SENSORS**
    Using an ohmmeter, check that there is no continuity between the terminal and body.
    If there is continuity, replace the sensor.
12. **REINSTALL KNOCK SENSORS**
    Using SST, install the knock sensor.
    SST 09817–16011
    Torque: 39 N·m (400 kgf·cm, 29 ft·lbf)
13. **REINSTALL WATER BYPASS PIPE AND KNOCK SENSOR WIRE**
    (See step 17 in cylinder block installation in Engine Mechanical)
14. **REINSTALL INTAKE MANIFOLD ASSEMBLY**
    (See steps 11 and 13 to 15 in cylinder head installation in Engine Mechanical)
15. **REINSTALL FUEL PRESSURE REGULATOR**
    (See step 1 in fuel pressure regulator installation)
16. **REINSTALL TIMING BELT IDLER NO.2**
    (See step 2 in timing belt installation in Engine Mechanical)
17. **REINSTALL CAMSHAFT TIMING PULLEYS AND TIMING BELT**
    (See steps 7 to 24 and 28 in timing belt installation in Engine Mechanical)
18. **REINSTALL HIGH–TENSION CORDS WITH IGNITION COILS**
    (See high–tension cords with ignition coils installation in Ignition System)

19. REINSTALL INTAKE AIR CONNECTOR
(See steps 16 to 19 and 24 in cylinder head installation in Engine Mechanical)
20. REINSTALL AIR CLEANER HOSE
21. REFILL WITH ENGINE COOLANT
22. RECHECK ENGINE COOLANT LEVEL

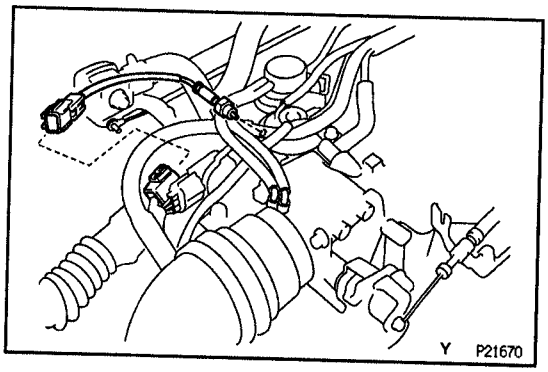

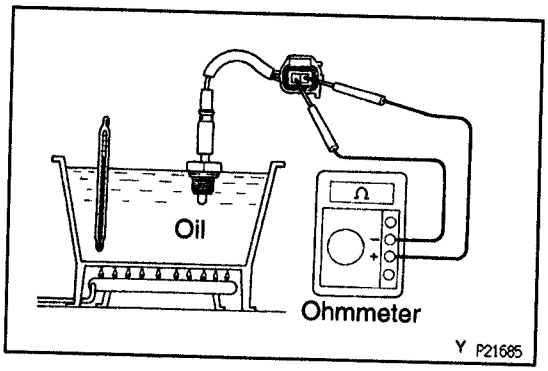

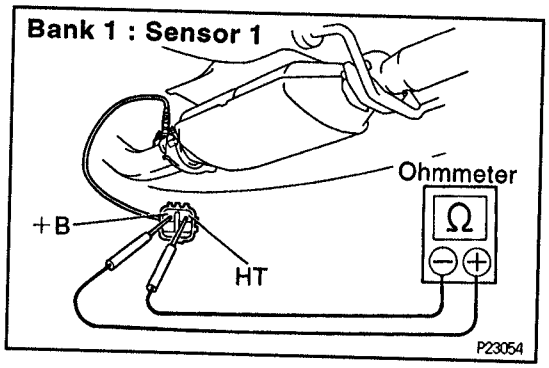

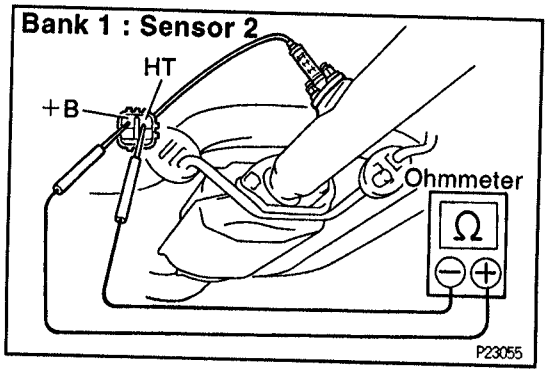

EGR GAS TEMPERATURE SENSOR (2WD/0.5 ton)

EG

EGR GAS TEMPERATURE SENSOR INSPECTION

EGSAQ-01

1. REMOVE EGR GAS TEMPERATURE SENSOR

2. INSPECT EGR GAS TEMPERATURE SENSOR
Using an ohmmeter, measure the resistance between the terminals.
Resistance:
At 50°C (122°F): 64 – 97 kΩ
At 100°C (212°F): 11 – 16 kΩ
At 150°C (302°F): 2 – 4 kΩ
If the resistance is not as specified, replace the sensor.

3. REINSTALL EGR GAS TEMPERATURE SENSOR
Torque: 20 N·m (200 kgf·cm, 14 ft·lbf)

HEATED OXYGEN SENSOR

EGSPA-01

HEATED OXYGEN SENSORS INSPECTION

(Bank 1, Sensor 1, Bank 1 Sensor 2)

INSPECT HEATER RESISTANCE OF HEATED OXYGEN SENSORS

(a) Disconnect the oxygen sensor connector.
(b) Using an ohmmeter, measure the resistance between the terminals +B and HT.
Resistance:
At 20°C (68°F): 11 – 16 Ω
If the resistance is not as specified, replace the sensor.
Torque: 20 N·m (200 kgf·cm, 14 ft·lbf)
(c) Reconnect the oxygen sensor connector.

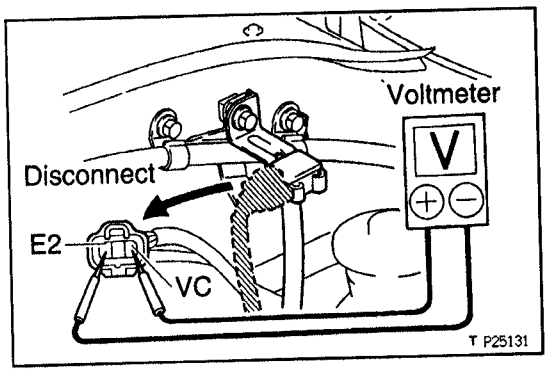

VAPOR PRESSURE SENSOR

EG674-01

4WD only:

VAPOR PRESSURE SENSOR INSPECTION

1. INSPECT POWER SOURCE VOLTAGE OF VAPOR PRESSURE SENSOR

(a) Disconnect the vapor pressure sensor connector.
(b) Turn the ignition switch ON.
(c) Using a voltmeter, measure the voltage between connector terminals VC and E2 of the wiring harness side.
Voltage: 4.5 – 5.5 V
(d) Turn the ignition switch to LOCK.
(e) Reconnect the vapor pressure sensor connector.

2. INSPECT POWER OUTPUT OF VAPOR PRESSURE SENSOR

(a) Turn the ignition switch ON.
(b) Disconnect the vacuum hose from the vapor pressure sensor.

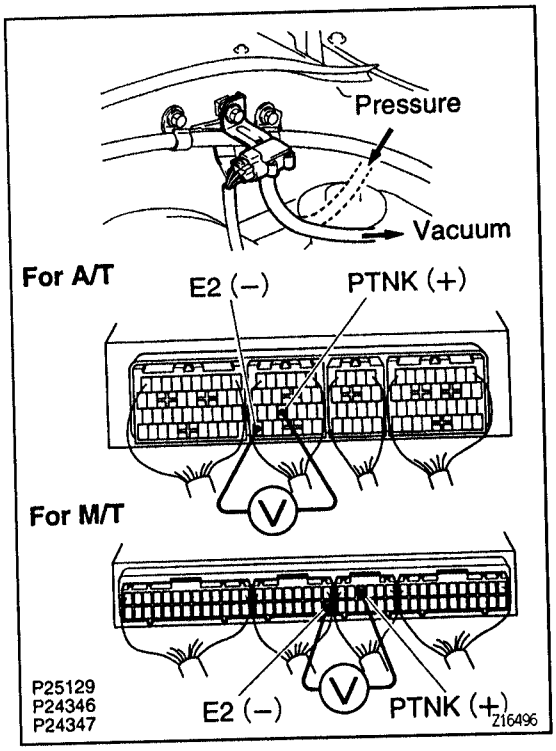

(c) Connect a voltmeter to terminals PTNK and E2 of the ECM, and measure the output voltage under ambient atmospheric pressure.
- Apply vacuum (2.0 kPa, 15 mmHg, 0.59 in.Hg) to the vapor pressure sensor.

Voltage: 1.3 – 2.1 V
- Release the vacuum from the vapor pressure sensor.

Voltage: 3.0 – 3.6 V
- Apply pressure (1.5 kPa, 15 gf/cm², 0.22 psi) to the vapor pressure sensor.

Voltage: 4.2 – 4.8 V

(d) Reconnect the vacuum hose to the vapor pressure sensor.

ENGINE CONTROL MODULE (ECM)

EG0HZ–0C

COMPONENTS FOR REMOVAL AND INSTALLATION

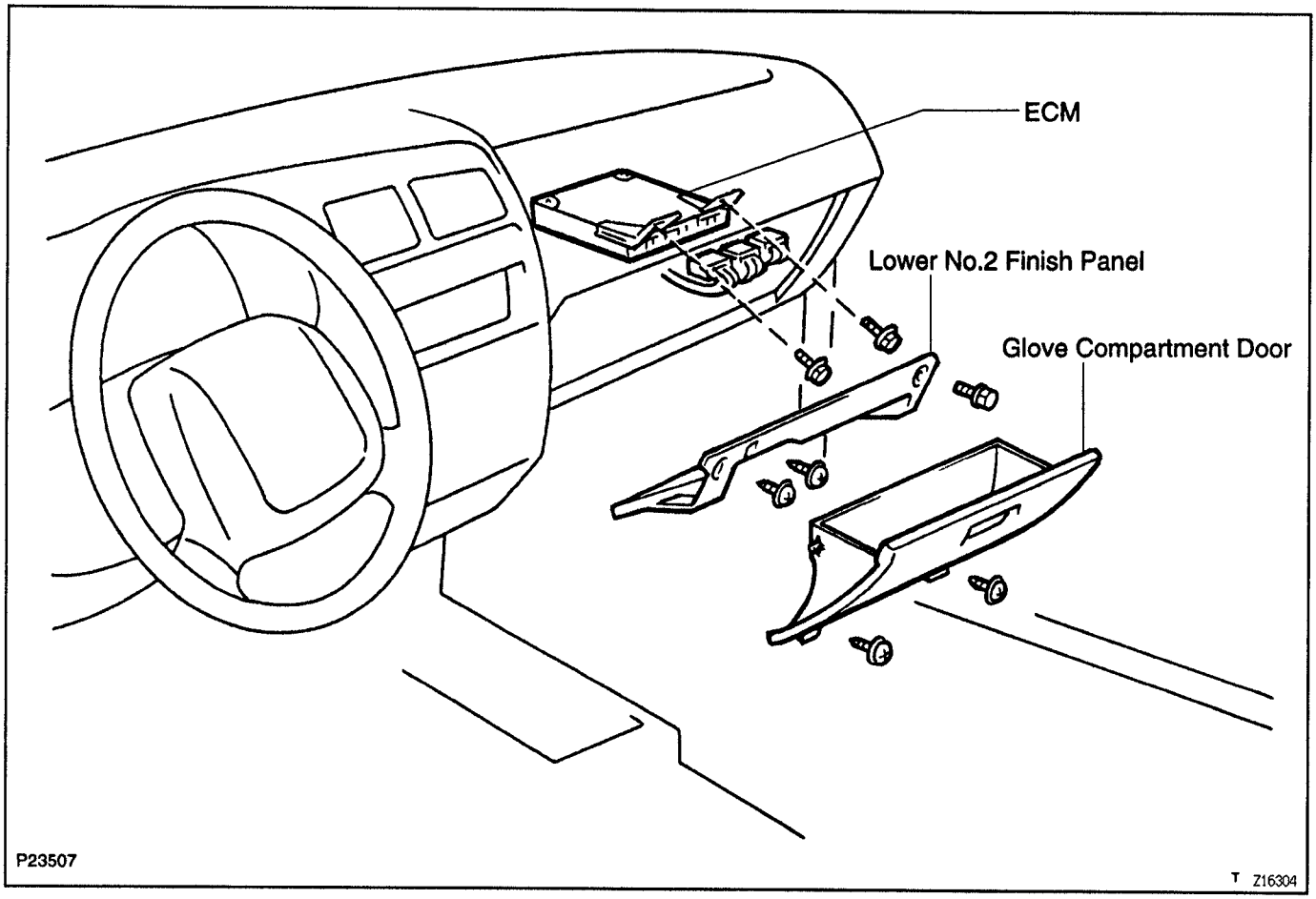

EG406–0C

ECM INSPECTION

1. **REMOVE ECM**
2. **INSPECT ECM**
   (See Engine Troubleshooting)
3. **REINSTALL ECM**

FUEL CUT RPM

EG5A8–04

FUEL CUT OFF INSPECTION

1. **WARM UP ENGINE**
   Allow the engine to warm up to normal operating temperature.

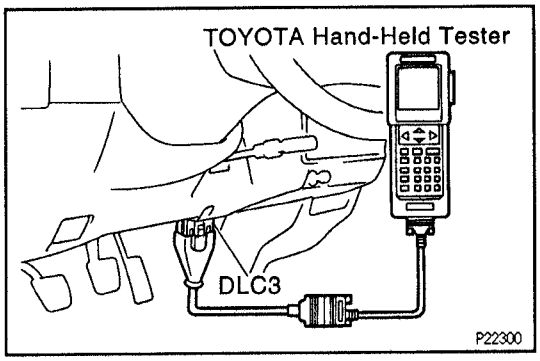

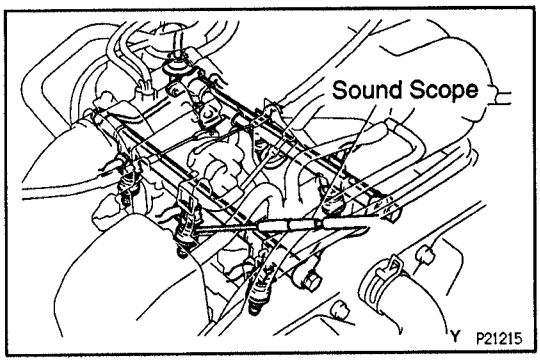

EG

2. CONNECT TOYOTA HAND-HELD TESTER OR OBD II SCAN TOOL

(a) Connect the TOYOTA hand-held tester or OBD II scan tool to the DLC3.

(b) Please refer to the TOYOTA hand-held tester or OBD II scan tool operator's manual for further details.

3. INSPECT FUEL CUT OFF RPM

(a) Increase the engine speed to at least 3,500 rpm.

(b) Use a sound scope to check for injector operating noise.

(c) Check that when the throttle lever is released, injector operation noise stops momentarily and then resumes.
HINT: Measure with the A/C OFF.
Fuel return rpm:
M/T: 1,000 rpm
A/T: 1,200 rpm

4. DISCONNECT TOYOTA HAND-HELD TESTER OR OBD II SCAN TOOL

SERVICE SPECIFICATIONS

SERVICE DATA

EG3DY-00

Fuel pressure regulator	Fuel pressure	at no vacuum	265 – 304 kPa (2.7 – 3.1 kgf/cm², 38 – 44 psi)
Fuel pump	Resistance	at 20°C (68°F)	0.2 – 3.0 Ω
Injector	Resistance		Approx. 13.8 Ω
	Injection volume		56 – 69 cm³ (3.4 – 4.2 cu in.) per 15 sec.
	Difference between each cylinder		6 cm³ (0.31 cu in.) or less
	Fuel leakage		1 drop or less per minute
MAF meter	Resistance (THA – E2)	at –20°C (–4°F)	10 – 20 kΩ
		at 0°C (32°F)	4 – 7 kΩ
		at 20°C (68°F)	2 – 3 kΩ
		at 40°C (104°F)	0.9 – 1.3 kΩ
		at 60°C (140°F)	0.4 – 0.7 kΩ
		at 80°C (176°F)	0.2 – 0.4 kΩ
Throttle body	Throttle valve fully closed angle		10°
	DP setting speed (M/T)		1,800 – 2,200 rpm
	Throttle opener setting speed		900 – 1,950 rpm
Throttle position sensor	Clearance between stop screw and lever		
	0 mm (0 in.)	VTA – E2	0.28 – 6.4 kΩ
	0.32 mm (0.013 in.)	IDL – E2	0.5 kΩ or less
	0.54 mm (0.021 in.)	IDL – E2	Infinity
	Throttle valve fully open	VTA – E2	2.0 – 11.6 kΩ
	–	VC – E2	2.7 – 7.7 kΩ
IAC valve	Resistance (+B – RSO or RSC)	at cold	17.0 – 24.5 Ω
		at hot	21.5 – 28.5 Ω

VSV for fuel pressure control	Resistance	at 20°C (68°F)	33 – 39 Ω
VSV for EGR (2WD, 4WD B/CAB)	Resistance	at 20°C (68°F)	33 – 39 Ω
VSV for EVAP	Resistance	at 20°C (68°F)	29 – 33 Ω
A/C idle–up valve (w/ A/C)	Resistance	at 20°C (68°F)	30 – 34 Ω
ECT sensor	Resistance	at –20°C (–4°F)	10 – 20 kΩ
		at 0°C (32°F)	4 – 7 kΩ
		at 20°C (68°F)	2 – 3 kΩ
		at 40°C (104°F)	0.9 – 1.3 kΩ
		at 60°C (140°F)	0.4 – 0.7 kΩ
		at 80°C (176°F)	0.2 – 0.4 kΩ
EGR gas temperature sensor (2WD, 4WD B/CAB)	Resistance	at 50°C (122°F)	64 – 97 kΩ
		at 100°C (212°F)	11 – 16 kΩ
		at 150°C (302°F)	2 – 4 kΩ
Heated oxygen sensor	Heater coil resistance	at 20°C (68°F)	11 – 16 Ω
Fuel cut rpm	Fuel return rpm	M/T	1,000 rpm
		A/T	1,200 rpm

EG

TORQUE SPECIFICATIONS

EGQJS–0C

Part tightened	N·m	kgf·cm	ft·lbf
Fuel line (Union bolt type, Flare nut type)	34.3	350	25
Fuel line (Flare nut type) using SST	28	285	21
Fuel inlet pipe x Intake manifold	8	80	71 in.·lbf
Delivery pipe x Intake manifold	13	130	10
Fuel pump bracket assembly, Fuel tank filler pipe x Fuel tank	3.4	35	30 in.·lbf
Fuel tank filler pipe x Body	29	300	22
Fuel tank band x Body	61	620	45
Fuel pressure regulator x LH delivery pipe	8	80	71 in.·lbf
MAF meter x Air cleaner cap	6.9	72	61
VSV assembly x Air intake connector	8	80	71 in.·lbf
A/C idle–up valve x Intake air connector	20	200	14
ECT sensor x Intake manifold	20	200	14
Knock sensor x Cylinder block	39	400	29
EGR gas temperature sensor x EGR valve	20	200	14
Heated oxygen sensor x Front exhaust pipe, Center exhaust pipe	20	200	14

COOLING SYSTEM

PREPARATION

RECOMMENDED TOOLS

R800Y–02

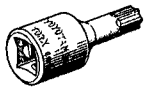	09042–00010 Torx Socket T30 .	Radiator support

EG

EQUIPMENT

EG1D3–06

Heater	
Radiator cap tester	
Thermometer	
Torque wrench	

ENGINE COOLANT

EG1D4–0C

Item	Capacity	Classification
M/T	10.1 liters (10.7 US qts, 8.9 Imp. qts)	Ethylene–glycol base
A/T	10.0 liters (10.5 US qts, 8.8 Imp. qts)	

SSM (SPECIAL SERVICE MATERIALS)

EG1D5–03

08826–00100	Seal Packing 1282B, THREE BOND 1282B or equivalent (FIPG)	Water pump

COOLANT CHECK

EG57V–04

1. **CHECK ENGINE COOLANT LEVEL AT RESERVOIR TANK**

   The engine coolant level should be between the "LOW" and "FULL" lines.

   If low, check for leaks and add engine coolant up to the "FULL" line.

2. **CHECK ENGINE COOLANT QUALITY**

(a) Remove the radiator cap from the water outlet.

CAUTION: To avoid the danger of being burned, do not remove the radiator cap while the engine and radiator are still hot, as fluid and steam can be blown out under pressure.

(b) There should not be any excessive deposits of rust or scale around the radiator cap or radiator filler hole, and the coolant should be free from oil.

If they are excessively dirty, clean the coolant passages and replace the coolant.

(c) Reinstall the radiator cap.

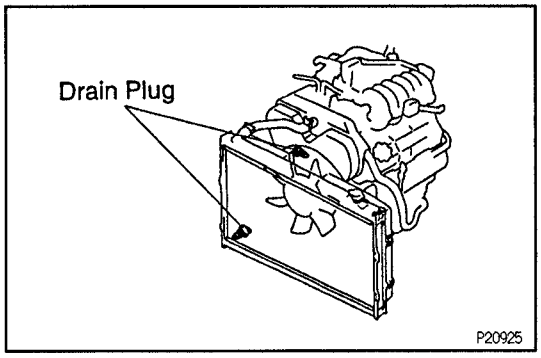

COOLANT REPLACEMENT

EG

EG57W–04

1. DRAIN ENGINE COOLANT

(a) Remove the radiator cap.

CAUTION: To avoid the danger of being burned, do not remove the radiator cap while the engine and radiator are still hot, as fluid and steam can be blown out under pressure.

(b) Loosen the drain plugs, and drain the engine coolant.

(c) Close the drain plugs.

2. FILL ENGINE COOLANT

(a) Slowly fill the system with engine coolant.

- Use a good brand of ethylene – glycol base engine coolant and mix it according to the manufacturer's directions.
- Using engine coolant which includes more than 50 % ethylene–glycol (but not more than 70 %) is recommended.

NOTICE:

- **Do not use an alcohol type engine coolant.**
- **The engine coolant should be mixed with demineralized water or distilled water.**

Capacity:

M/T

10.1 liters (10.7 US qts, 8.9 Imp. qts)

A/T

10.0 liters (10.5 US qts, 8.8 Imp. qts)

(b) Install the radiator cap.

(c) Start the engine, and bleed the cooling system.

(d) If necessary, refill engine coolant into the reservoir tank until it is "FULL" line.

3. CHECK ENGINE COOLANT FOR LEAKS

WATER PUMP

COMPONENTS FOR REMOVAL AND INSTALLATION

EG67X-02

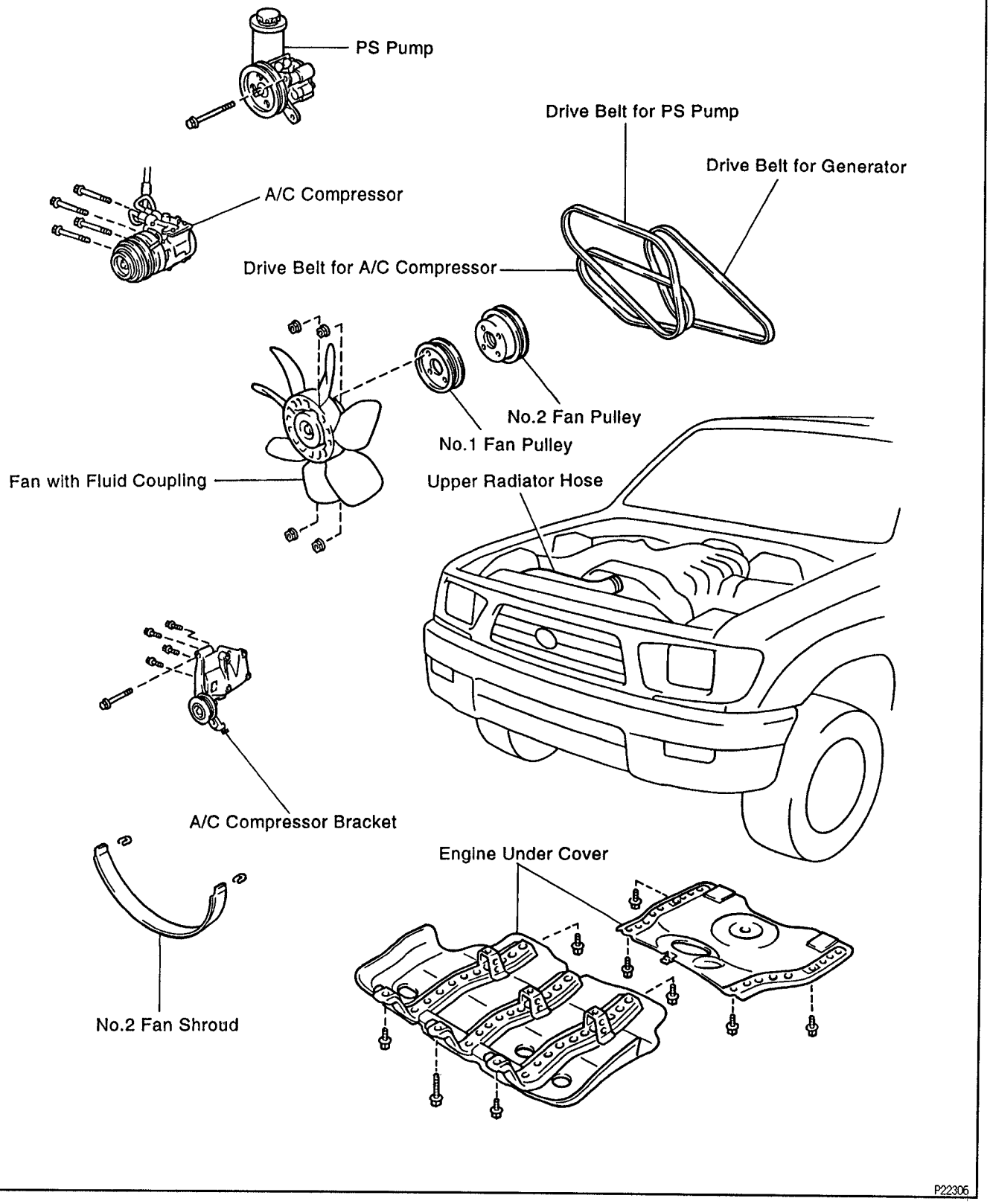

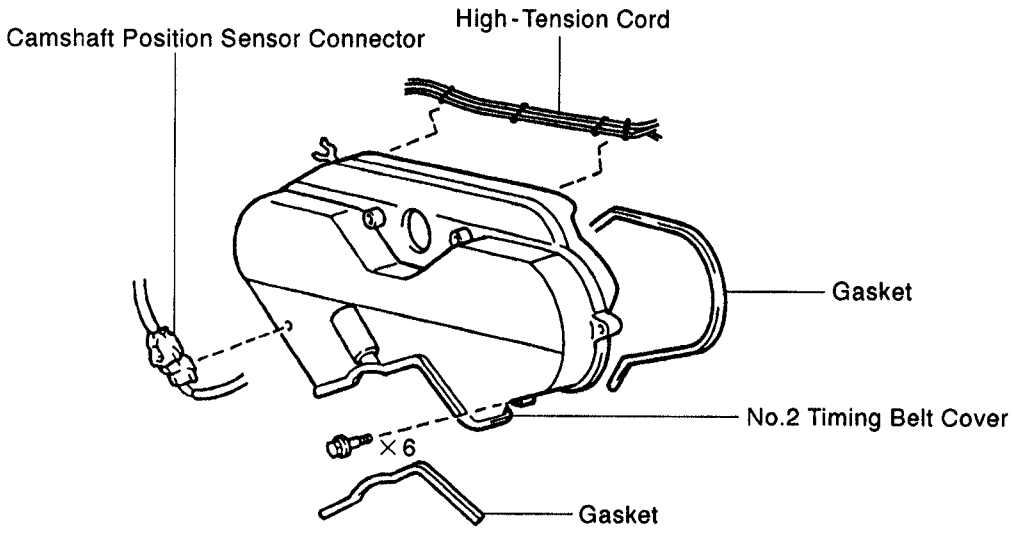

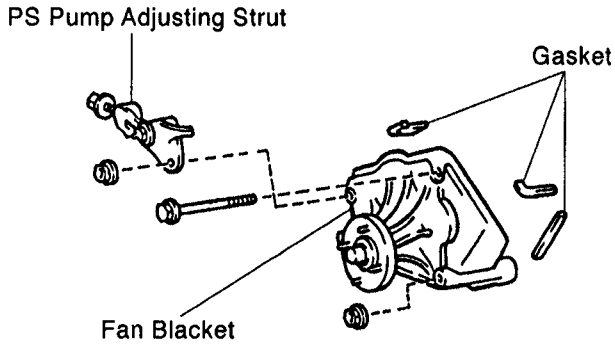

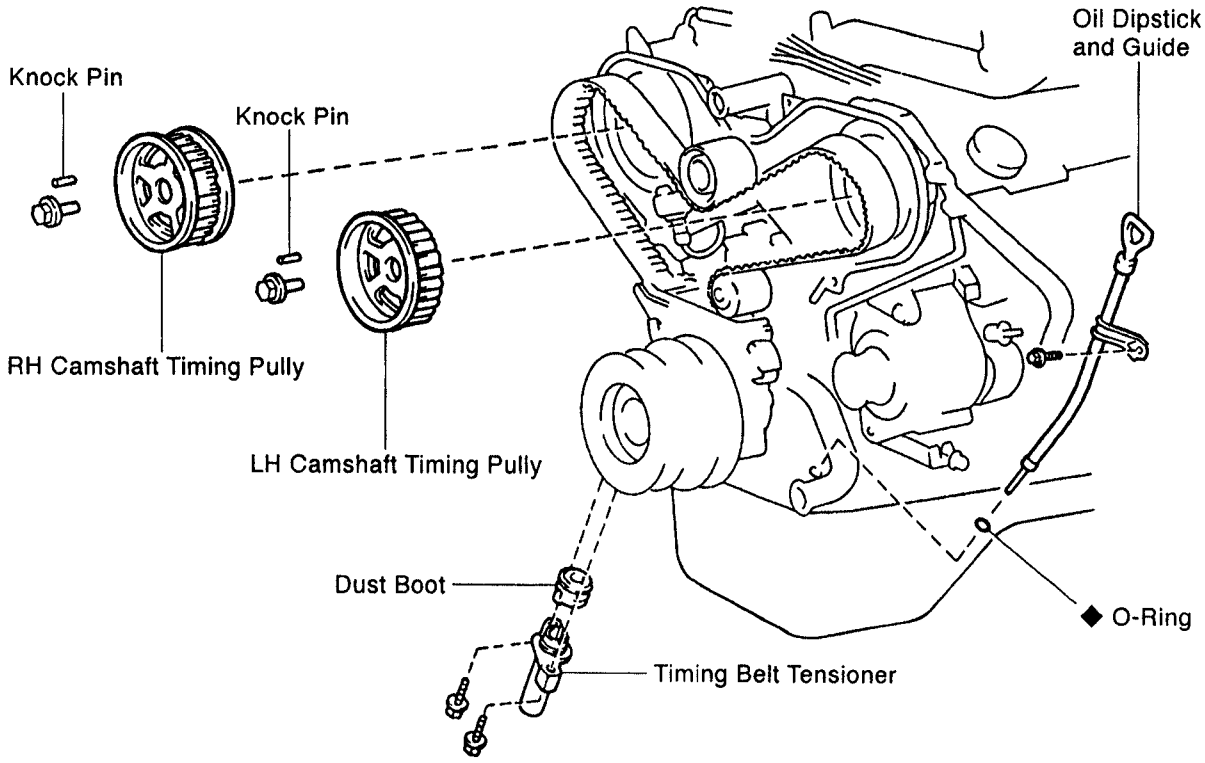

◆ Non-reusable part

P24358

EG

EG

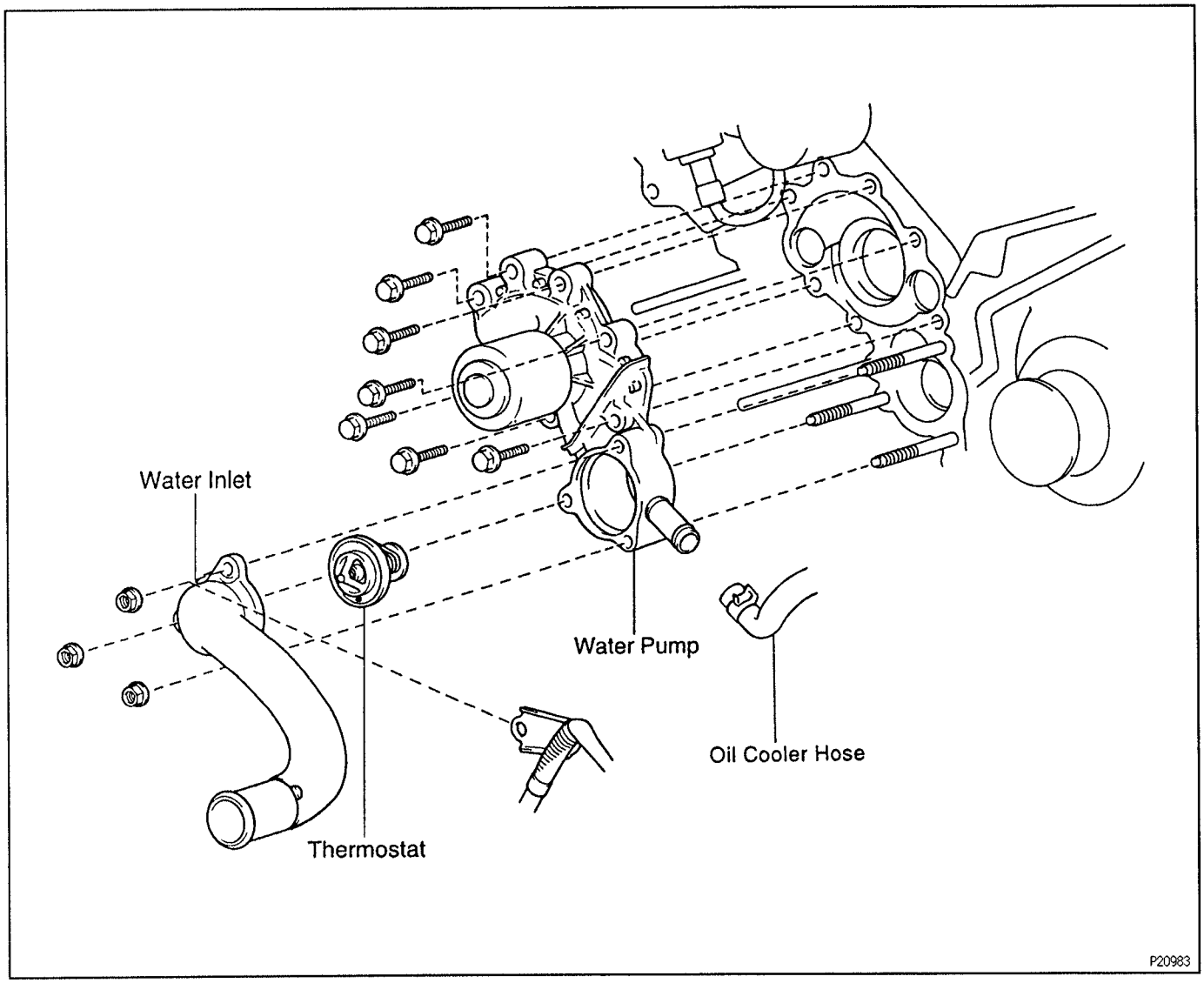

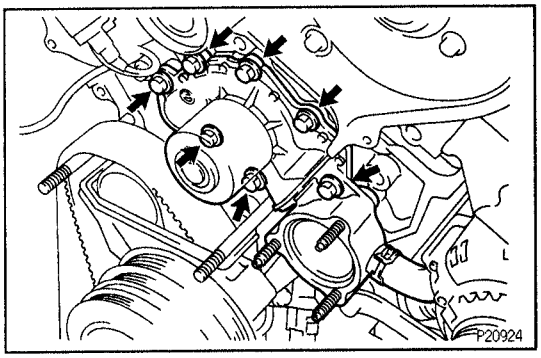

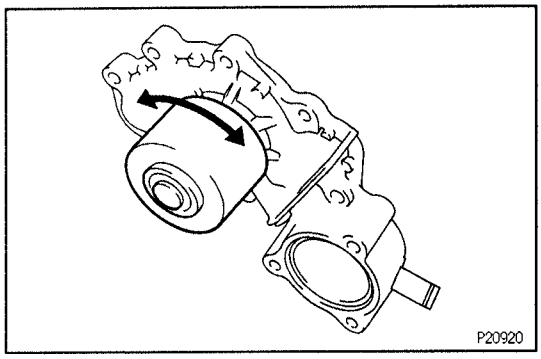

EG1D6-07

WATER PUMP REMOVAL

1. **REMOVE TIMING BELT**
   (See steps 1 to 18 in timing belt removal in Engine Mechanical)
2. **REMOVE WATER INLET AND THERMOSTAT**
3. **w/ OIL COOLER:**
   DISCONNECT NO.2 OIL COOLER HOSE FROM WATER PUMP
4. **REMOVE WATER PUMP**

EG57Y-02

WATER PUMP COMPONENTS INSPECTION

1. **INSPECT WATER PUMP**

(a) Visually check the air hole for coolant leakage.
If leakage is found, replace the water pump.
If engine coolant has leaked onto the timing belt, replace the timing belt.

(b) Turn the pulley, and check that the water pump bearing moves smoothly and quietly.

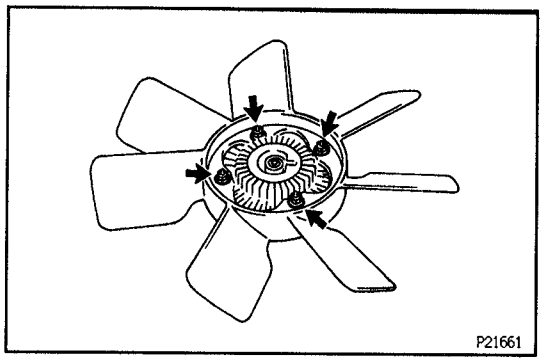

If necessary, replace the water pump.

2. **INSPECT FLUID COUPLING**

(a) Remove the 4 nuts and fan from the fluid coupling.

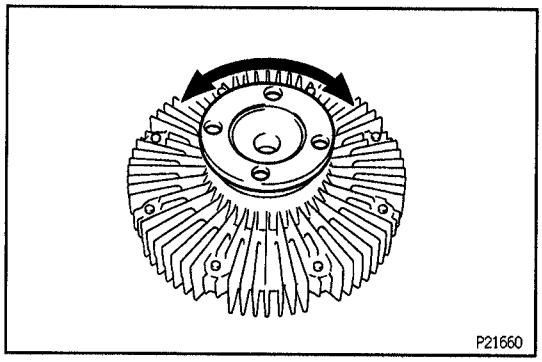

(b) Check that the fluid coupling is not damaged and that no silicon oil leaks.
If necessary, replace the fluid coupling.

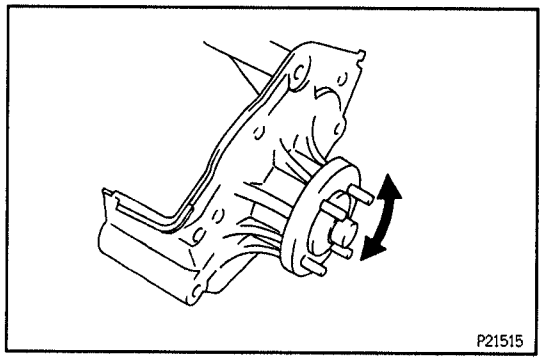

3. **INSPECT FAN PULLEY BRACKET**

(a) Check the turning smoothness of the fan pulley.
If necessary, replace the pully bracket.

(b) Reinstall the fan to the fluid coupling with the 4 nuts.
Torgue: 7.4 N·m (75 kgf·cm, 65 in.·lbf)

TIMING BELT COMPONENTS INSPECTION EG675–01

(See timing belt inspection in Engine Mechanical)

WATER PUMP INSTALLATION EG676–01

1. **INSTALL WATER PUMP**

(a) Remove any old packing (FIPG) material and be careful not to drop any oil on the contact surfaces of the water pump and cylinder block.

- Using a razor blade and gasket scraper, remove all the old packing (FIPG) material from the gasket surfaces and sealing groove.
- Thoroughly clean all components to remove all the loose material.
- Using a non–residue solvent, clean both sealing surfaces.

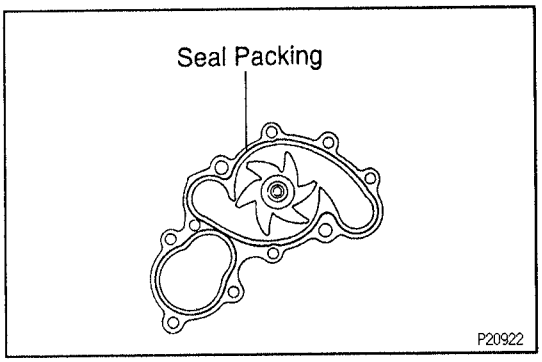

(b) Apply seal packing to the water pump groove as shown in the illustration.
Seal packing: Part No. 08826–00100 or equivalent
- Install a nozzle that has been cut to a 2 – 3 mm (0.08 – 0.12 in.) opening.
- Parts must be assembled within 5 minutes of application. Otherwise the material must be removed and reapplied.
- Immediately remove nozzle from the tube and reinstall cap.

(c) Install the water pump with the 7 bolts.
Torque: 20 N·m (200 kgf·cm, 14 ft·lbf)

2. w/ OIL COOLER:
CONNECT NO.2 OIL COOLER HOSE

3. INSTALL THERMOSTAT AND WATER INLET
(See step 1 in thermostat installation)

4. INSTALL TIMING BELT
(See steps 7 to 30 in timing belt installation in Engine Mechanical)

THERMOSTAT

EG580-01

COMPONENTS FOR REMOVAL AND INSTALLATION

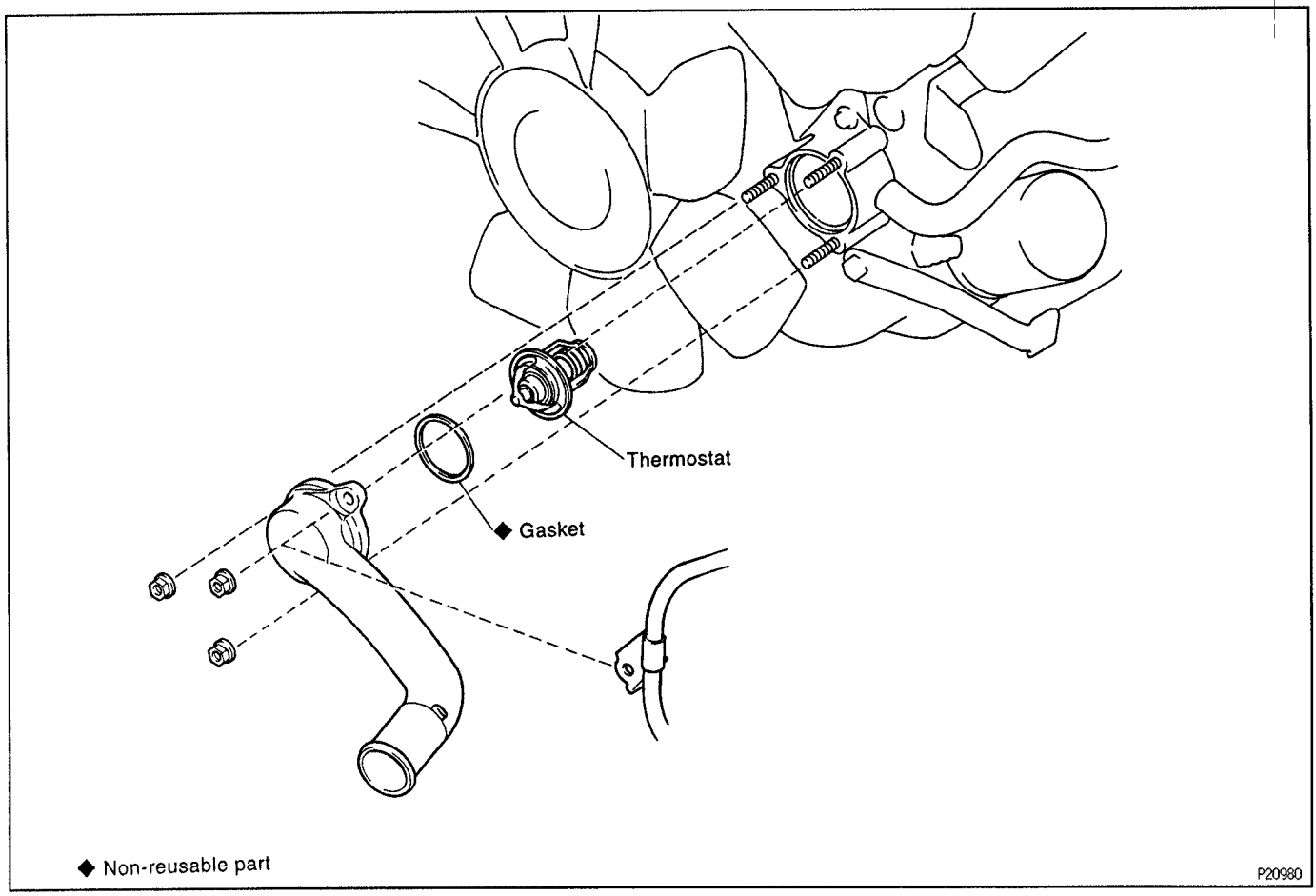

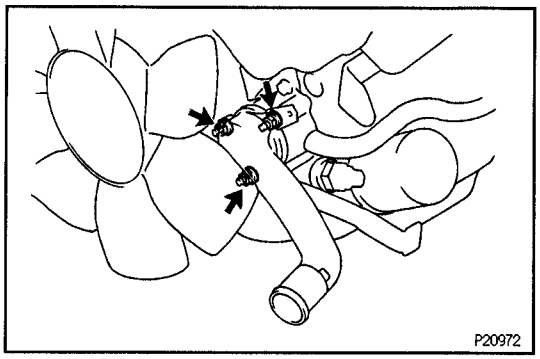

THERMOSTAT REMOVAL

EG1DB–06

1. **DRAIN ENGINE COOLANT**
2. **DISCONNECT LOWER RADIATOR HOSE**
3. **REMOVE THERMOSTAT**

(a) Remove the 3 nuts, water inlet and thermostat with gasket from the water pump.

(b) Remove the gasket from the thermostat.

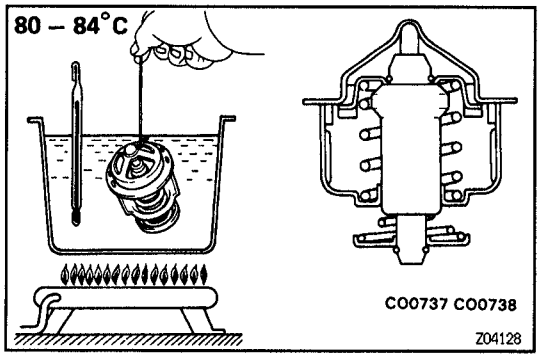

THERMOSTAT INSPECTION

EG1DC–07

EG

HINT: Thermostat is numbered according to the valve opening temperature.

(a) Immerse the thermostat in water and heat the water gradually.

(b) Check the valve opening temperature and valve lift.

Valve opening temperature:

80 – 84°C (176 – 183°F)

Valve lift:

At 95°C (203°F): 8.5 mm (0.335 in.) or more

If the valve opening temperature and valve lift are not within specifications, replace the thermostat.

(c) Check that the valve is fully closed when the thermostat is at low temperatures (below 40°C (104°F)).

If it is not tight, replace the thermostat.

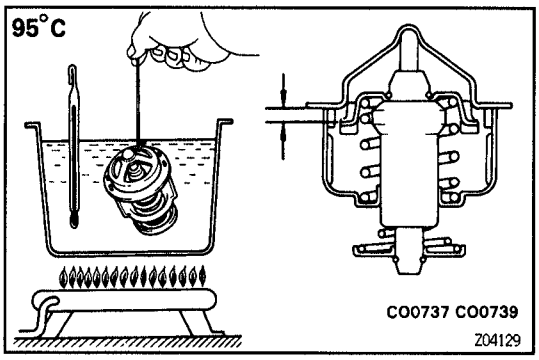

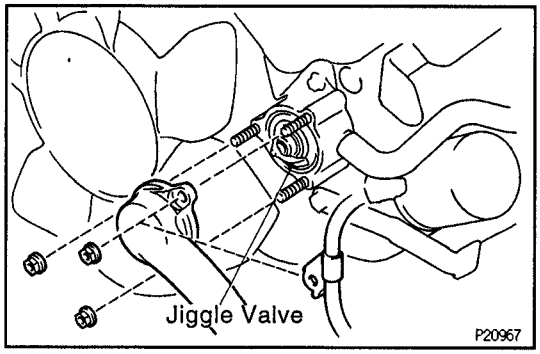

THERMOSTAT INSTALLATION

EG677–01

1. **INSTALL THERMOSTAT**

(a) Place a new gasket to the thermostat.

(b) Install the thermostat with the jiggle valve downward.

(c) Install the water inlet with the 3 bolts.

Torque: 20 N·m (200 kgf·cm, 14 ft·lbf)

2. **CONNECT LOWER RADIATOR HOSE**
3. **FILL WITH ENGINE COOLANT**
4. **START ENGINE AND CHECK FOR LEAKS**

RADIATOR

RADIATOR CLEANING

EG074-06

Using water or a steam cleaner, remove any mud or dirt from the radiator core.

NOTICE: If using a high pressure type cleaner, be careful not to deform the fins of the radiator core. (i.e. Maintain a distance between the cleaner nozzle and radiator core)

EG

RADIATOR INSPECTION

EG66V-01

1. **REMOVE RADIATOR CAP**

CAUTION: To avoid the danger of being burned, do not remove it while the engine and radiator are still hot, as fluid and steam can be out under pressure.

2. **INSPECT RADIATOR CAP**

NOTICE: If the radiator cap has contaminations, always rinse it with water.

Using a radiator cap tester, pump the tester and measure the vacuum vale opening pressure.

Standard opening pressure:

74 – 103 kPa

(0.75 – 1.05 kgf/cm², 10.7 – 14.9 psi)

Minimum opening pressure:

59 kPa (0.6 kgf/cm², 8.5 psi)

HINT: Use the tester's maximum reading as the opening pressure.

If the opening pressure is less than the minimum, replace the radiator cap.

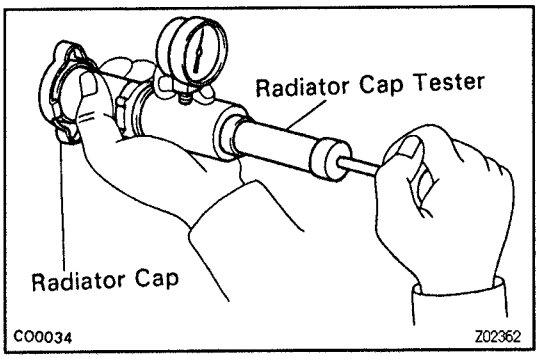

3. **INSPECT COOLING SYSTEM FOR LEAKS**

(a) Fill the radiator with coolant and attach a radiator cap tester.

(b) Warm up the engine.

(c) Pump it to 118 kPa (1.2 kgf/cm², 17.1 psi), and check that the pressure does not drop.

If the pressure drops, check the hoses, radiator or water pump for leaks. If no external leaks are found, check the heater core, cylinder block and head.

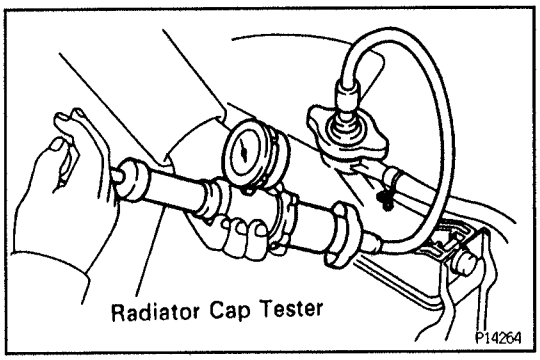

4. **REINSTALL RADIATOR CAP**

EG1J6–08

COMPONENTS FOR REMOVAL AND INSTALLATION

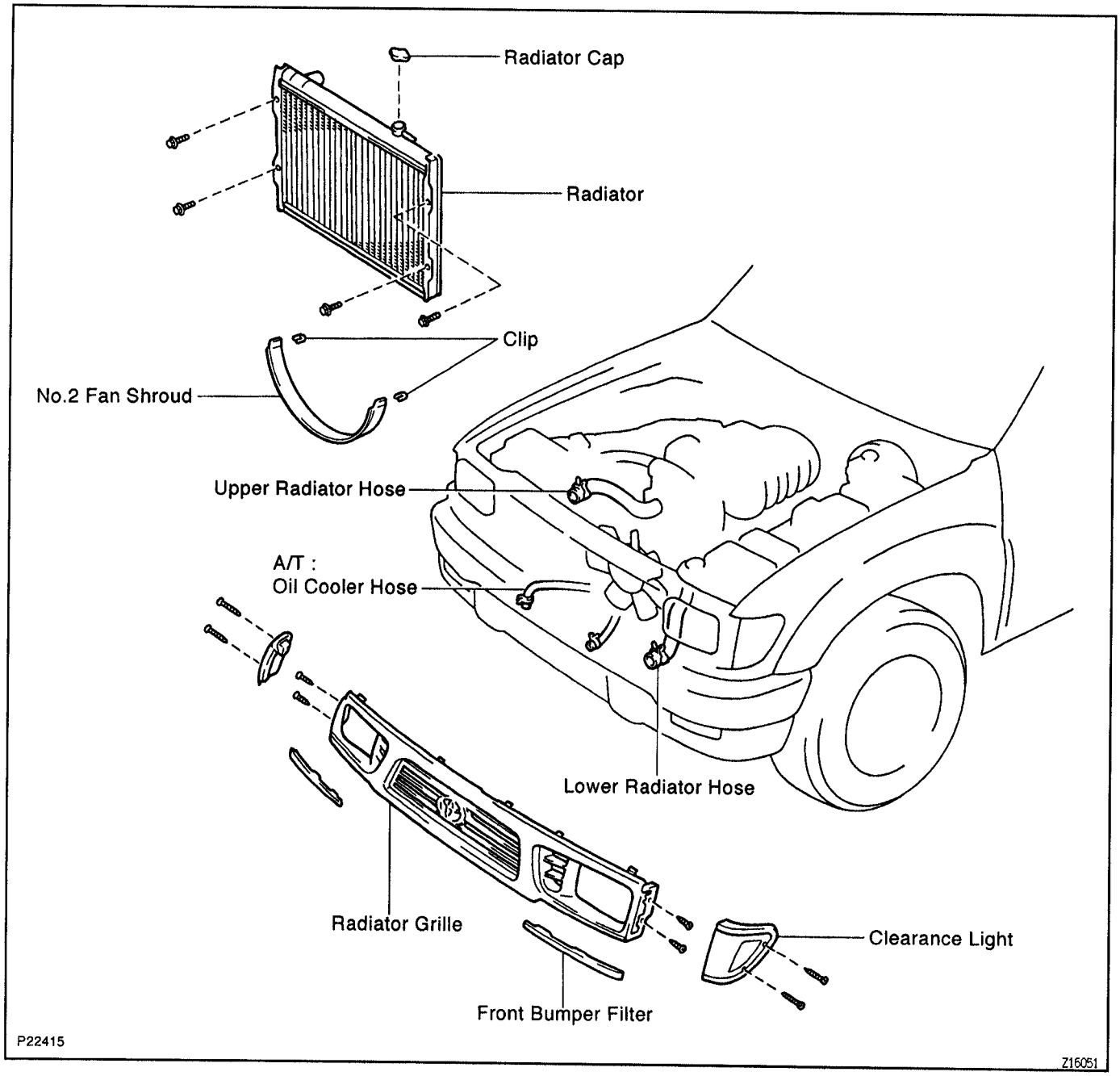

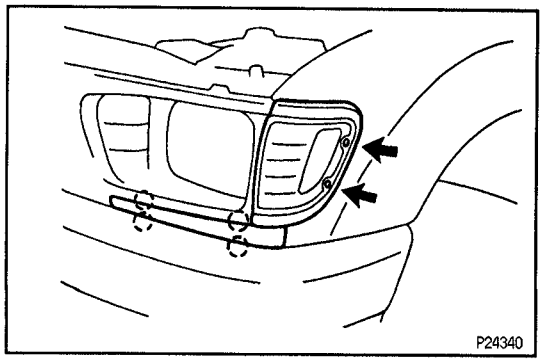

EG678–01

RADIATOR REMOVAL

1. **DRAIN ENGINE COOLANT**
2. **REMOVE FRONT BUMPER FILLER**
3. **REMOVE RADIATOR GRILLE**

(a) Remove the 4 screws and clearance lights.

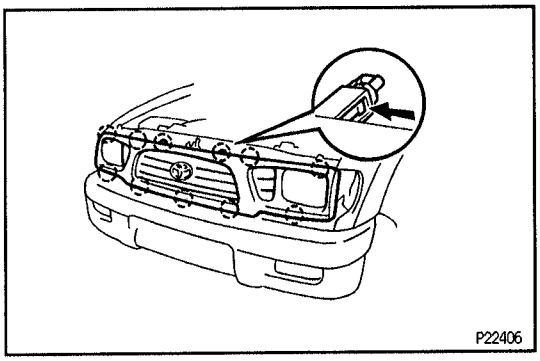

(b) Remove the 1 screw, 11 clips and radiator grille.

4. **DISCONNECT UPPER RADIATOR HOSE**
5. **DISCONNECT RADIATOR RESERVOIR HOSE**
6. **DISCONNECT LOWER RADIATOR HOSE**
7. **REMOVE RADIATOR NO.2 FAN SHROUD**
8. **A/T:**
   DISCONNECT OIL COOLER HOSES

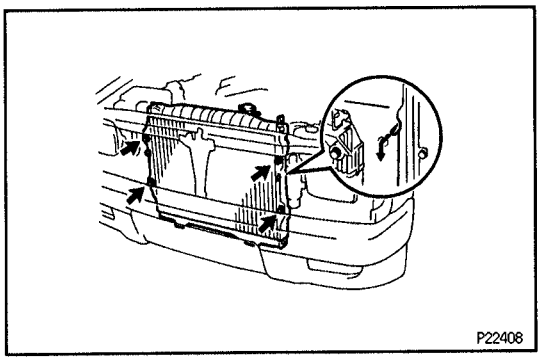

9. **REMOVE RADIATOR**
   Remove the 4 bolts and the radiator.
   Torque: 12 N·m (120 kgf·cm, 8.7 ft·lbf)
   INSTALLATION HINT: Insert the tabs of the radiator support through the radiator service holes.

COMPONENTS FOR DISASSEMBLY AND ASSEMBLY

EG1J8-0F

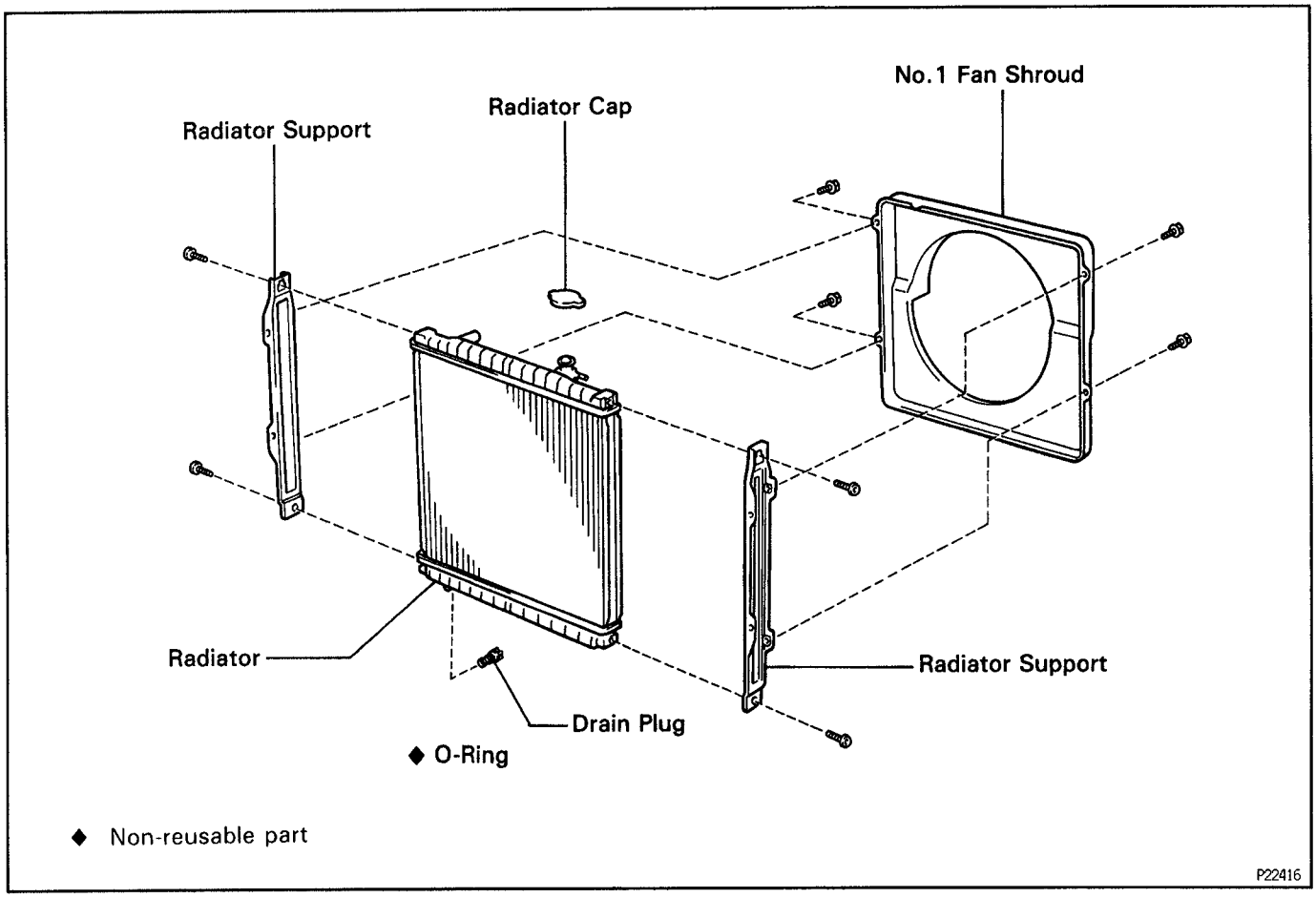

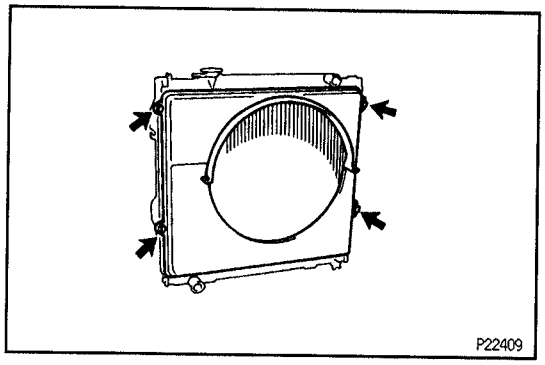

RADIATOR DISASSEMBLY

EG567–05

1. **REMOVE NO.1 FAN SHROUD.**
Remove the 4 bolts and No.1 fan shroud.

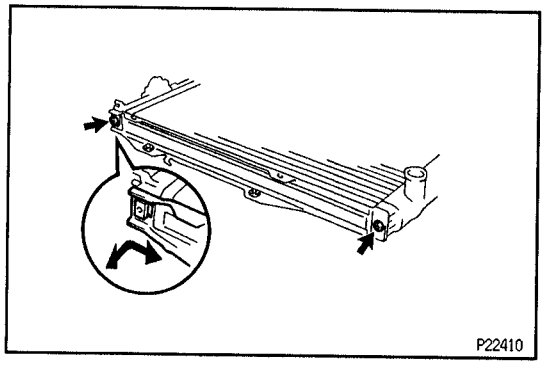

2. **REMOVE RADIATOR SUPPORTS**
Using a torx wrench, remove the 4 torx screws and the 2 radiator supports.
Torx wrench: T30 (Part No. 09042–00010 or locally manufactured tool)
HINT: Lift up the floor carpet and loosen the screw.

EG

RADIATOR ASSEMBLY

EG679–01

Assembly is in the reverse order of disassembly.

RADIATOR INSTALLAITON

EG67A–01

Installation is in the reverse order of removal.

SERVICE SPECIFICATIONS

SERVICE DATA

EG1DJ–06

Thermostat	Valve opening pressure		80 – 84°C (176 – 183°F)
	Valve lift	at 95°C (203°F)	8.5 mm (0.335 in .) or more
Radiator cap	Relief valve opening pressure	STD	74 – 103 kPa (0.75 – 1.05 kgf/cm², 10.7 – 14.9 psi)
		Minimum	59 kPa (0.6 kgf/cm², 8.8 psi)

TORQUE SPECIFICATIONS

EG1DK–06

Part tightened	N·m	kgf·cm	ft·lbf
Fan x Fluid coupling	7.4	75	65 in.·lbf
Water pump x Cylinder block	20	200	14
Water inlet x Water pump	20	200	14
Radiator support x Body	12	120	8.7

LUBRICATION SYSTEM

PREPARATION

EG1CR-04

SST (SPECIAL SERVICE TOOLS)

	09032-00100 Oil Pan Seal Cutter	
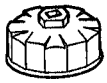	09228-07501 Oil Filter Wrench	
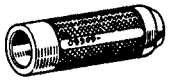	09309-37010 Transmission Bearing Replacer	Camshaft front oil seal
	09816-30010 Oil Pressure Switch Socket	

EG1CS-03

RECOMMENDED TOOLS

	09200-00010 Engine Adjust Kit .	

EG1CT-05

EQUIPMENT

Oil pressure gauge	
Precision straight edge	Oil pump
Torque wrench	

EG1CU-0F

LUBRICANT

Item	Capacity	Classification
Engine oil		API grade SH, Energy-Conserving II multigrade engine oil or ILSAC multigrade engine oil and recommended viscosity oil, with SAE 5W-30 being preferred engine oil
2WD		
Dry fill	5.9 liters (6.2 US qts, 5.2 Imp. qts)	
Drain and refill		
w/ Oil filter change	5.4 liters (5.7 US qts, 4.8 Imp. qts)	
w/o Oil filter change	5.1 liters (5.4 US qts, 4.5 Imp. qts)	
4WD		
Dry fill	5.9 liters (6.2 US qts, 5.2 Imp. qts)	
Drain and refill		
w/ Oil filter change	5.2 liters (5.5 US qts, 4.6 Imp. qts)	
w/o Oil filter change	4.9 liters (5.2 US qts, 4.3 Imp. qts)	

SSM (SPECIAL SERVICE MATERIALS)

EG1CV–04

08826–00080	Seal Packing Black or equivalent (FIPG)	Oil pump, Oil pan
08833–00080	Adhesive 1344, THREE BOND 1344, LOCTITE 242 or equivalent	Oil pressure sender gauge

OIL PRESSURE CHECK

EG

EG5BE–04

1. **CHECK OIL QUALITY**
   Check the oil for deterioration, entry of water, discoloring or thinning.
   If oil quality is visibly poor, replace it.
2. **CHECK OIL LEVEL**
   The oil level should be between the "L" and "F" marks on the level gauge. If low, check for leakage and add oil up to the "F" mark.
3. **REMOVE OIL PRESSURE SWITCH**
   Using SST, remove the oil pressure switch.
   SST 09816–30010
4. **INSTALL OIL PRESSURE GAUGE**
5. **START ENGINE**
   Start the engine and warm it up to normal operating temperature.

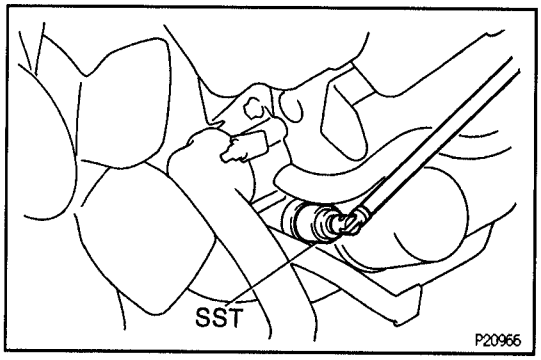

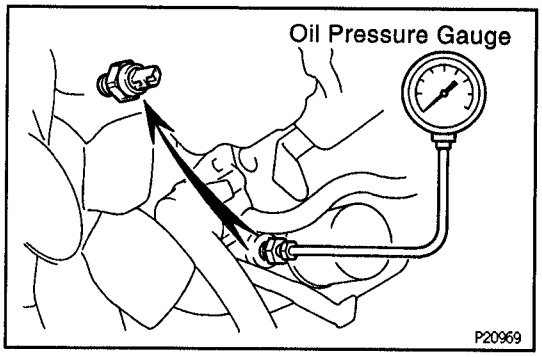

6. **MEASURE OIL PRESSURE**
   Oil pressure:
   At idle speed:
   29 kPa (0.3 kgf/cm², 4.3 psi) or more
   At 3,000 rpm:
   245 – 520 kPa (2.5 – 5.3 kgf/cm², 36 – 75 psi)
7. **REMOVE OIL PRESSURE GAUGE**

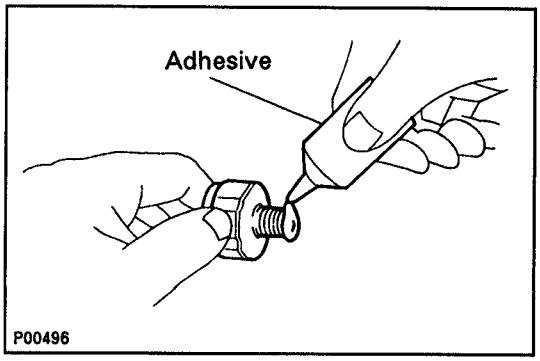

8. **INSTALL OIL PRESSURE SWITCH**
   (a) Apply adhesive to 2 or 3 threads.
   Adhesive:
   Part No. 08833–00080, THREE BOND 1344, LOCTITE 242 or equivalent
   (b) Using SST, install the oil pressure switch.
   SST 09816–30010
   Torque: 15 N·m (150 kgf·cm, 11 ft·lbf)
9. **START ENGINE AND CHECK FOR LEAKS**

OIL AND FILTER REPLACEMENT

BQ67B-01

NOTICE:

- **Prolonged and repeated contact with mineral oil will result in the removal of natural fats from the skin, leading to dryness, irritation and dermatitis. In addition, used engine oil contains potentially harmful contaminants which may cause skin cancer.**
  Adequate means of skin protection and washing facilities should be provided.
- **Care should be taken, therefore, when changing engine oil, to minimize the frequency and length of time your skin is exposed to used engine oil.**
  Protective clothing and gloves, that cannot be penetrated by oil, should be worn. The skin should be thoroughly washed with soap and water, or use waterless hand cleaner to remove any used engine oil. Do not use gasoline, thinners, or solvents.
- **In order to preserve the environment, used oil and used oil filters must be disposed of only at designated disposal sites.**

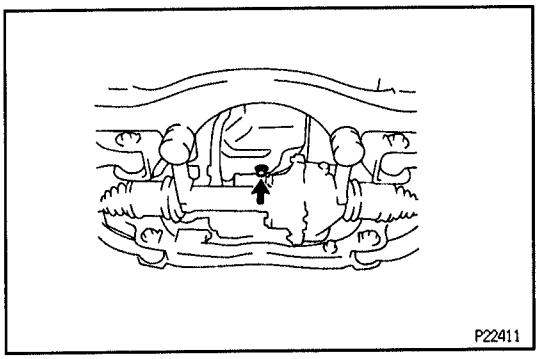
P22411

1. DRAIN ENGINE OIL

(a) Remove the oil filler cap.
(b) Remove the oil dipstick.
(c) Remove the oil drain plug and drain the oil into a container.

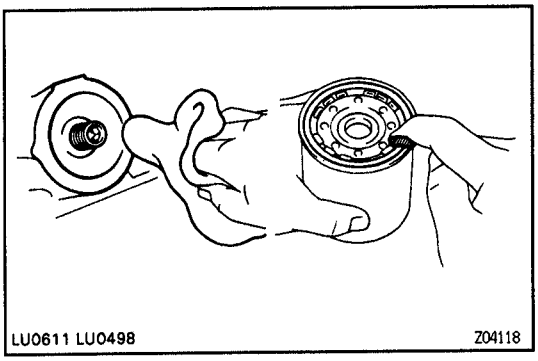
LU0611 LU0498 Z04118

2. REPLACE OIL FILTER

(a) Using SST, remove the oil filter (located on left side of the cylinder block).
SST 09228-07501
(b) Clean the filter contact surface on the filter mounting.
(c) Apply clean engine oil to the gasket of a new oil filter.

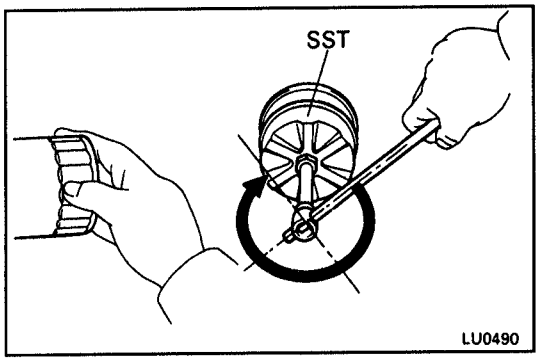

LU0490

(d) Tighten the filter by hand until the gasket contacts the seat of the filter mounting. Then using SST, give it an additional 3/4 turn to seat the filter.
SST 09228-07501

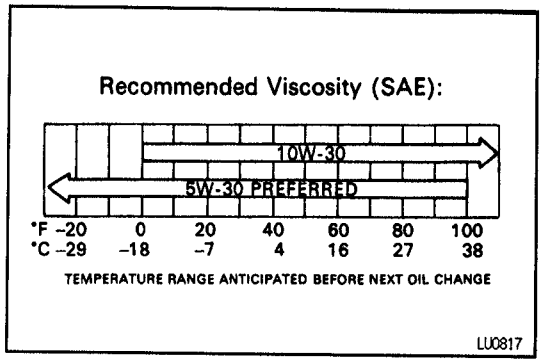

3. FILL WITH ENGINE OIL

(a) Clean and install the oil drain plug with a new gasket.

(b) Fill the engine with new oil.

Oil grade

API grade SH, Energy–Conserving II multigrade engine oil or ILSAC multigrade engine oil and recommended viscosity oil, with SAE 5W–30 being preferred engine oil

Oil capacity

2WD:

Drain and refill

w/ Oil filter change

5.9 liters (6.2 US qts, 5.2 Imp. qts)

w/o Oil filter change

5.1 liters (5.4 US qts, 4.5 Imp. qts)

Dry fill

6.3 liters (6.7 US qts, 5.5 Imp. qts)

4WD:

Drain and refill

w/ Oil filter change

5.2 liters (5.5 US qts, 4.6 Imp. qts)

w/o Oil filter change

4.9 liters (5.2 US qts, 4.3 Imp. qts)

Dry fill

5.9 liters (6.2 US qts, 5.2 Imp. qts)

4. START ENGINE AND CHECK FOR LEAKS

5. RECHECK ENGINE LEVEL

OIL PUMP

COMPONENTS FOR REMOVAL AND INSTALLATION

EG56G-03

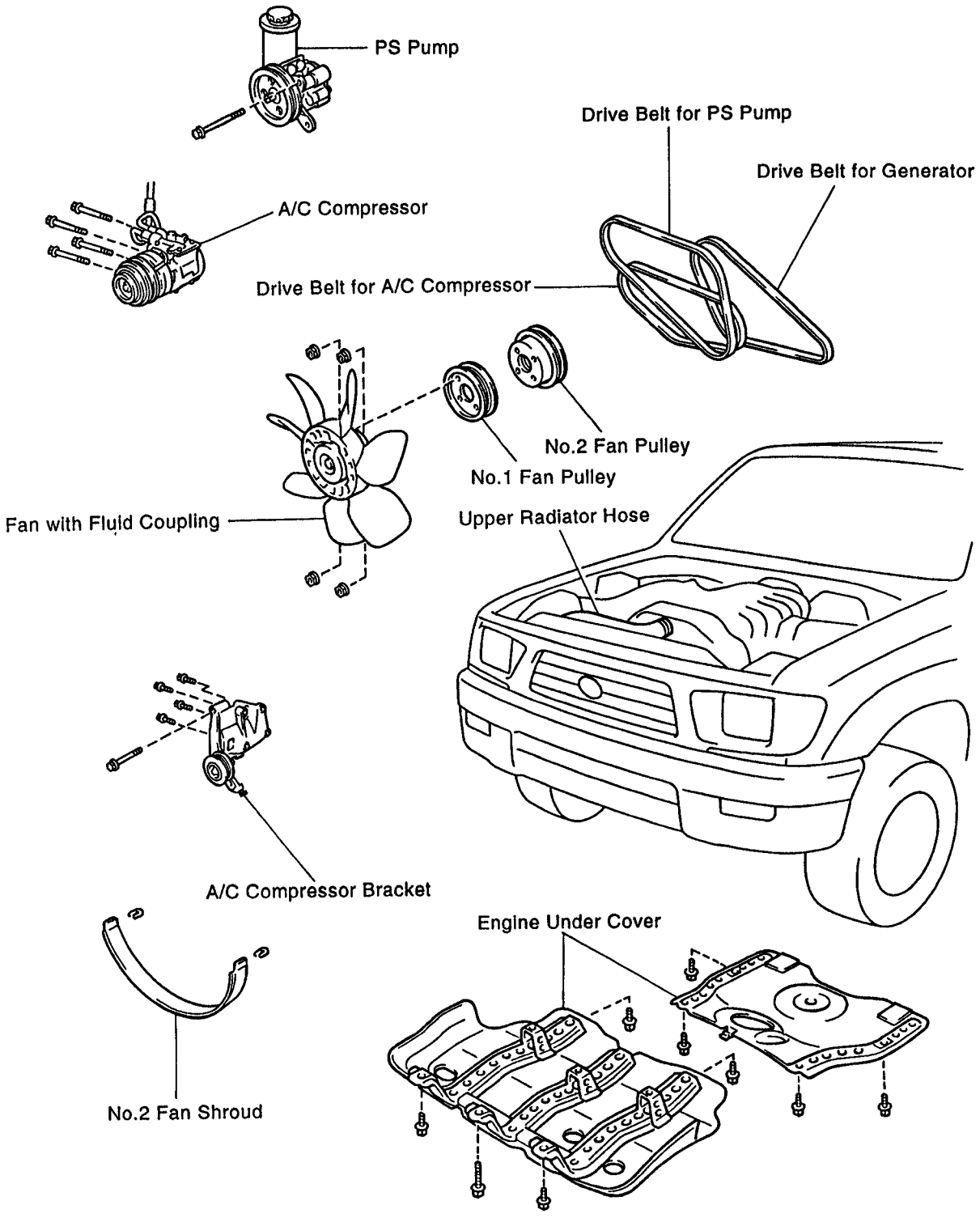

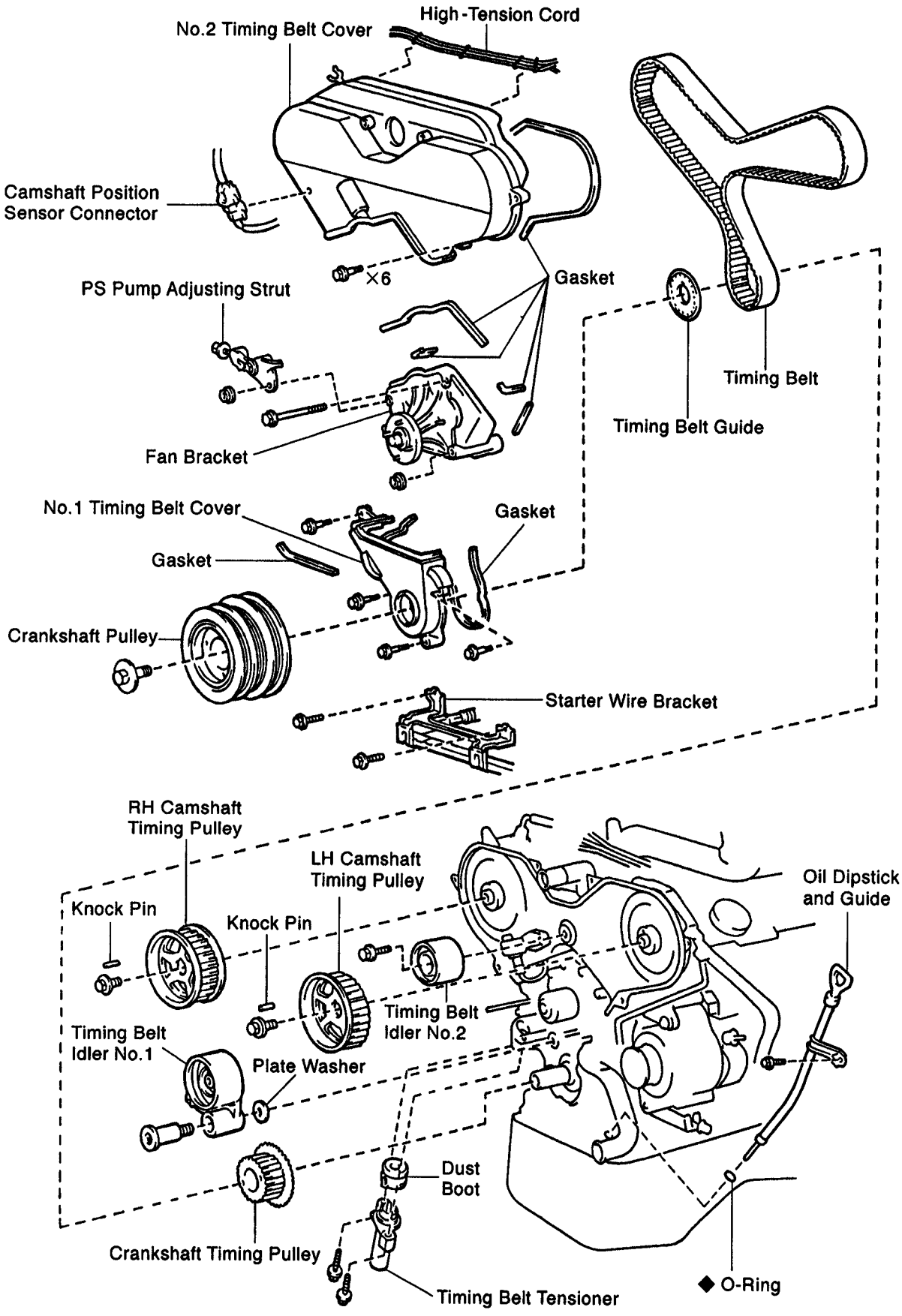

◆ Non-reusable part

P24354

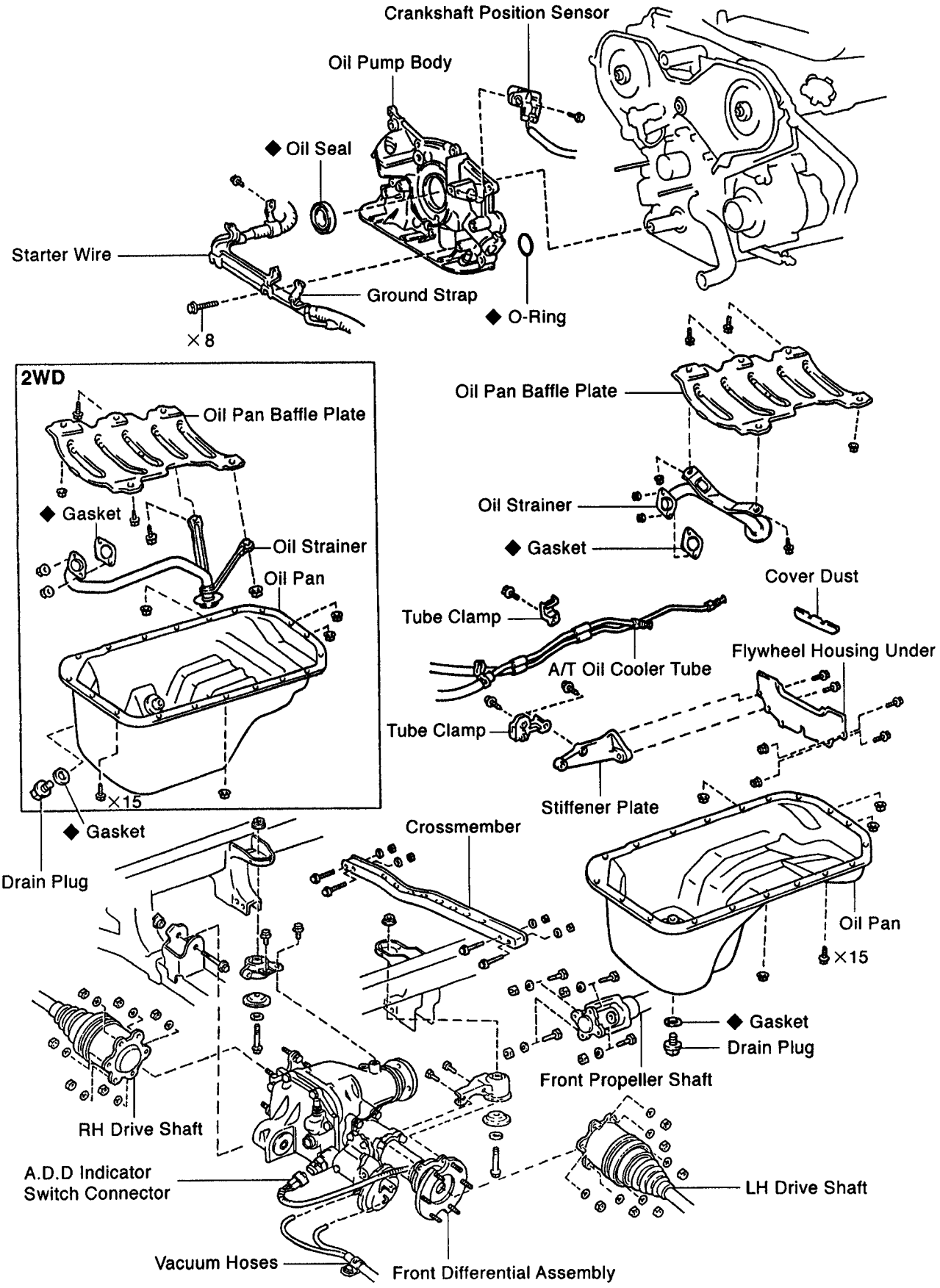

◆ Non-reusable part

P24345

EG56K–02

OIL PUMP REMOVAL

HINT: When repairing the oil pump, the oil pan and strainer should be removed and cleaned.

1. **REMOVE CRANKSHAFT TIMING PULLEY**
   (See timing belt removal in Engine Mechanical)
2. **4WD:**
   REMOVE FRONT DIFFERENTIAL
   (See SA Section)
3. **DRAIN ENGINE OIL**
4. **A/T:**
   REMOVE OIL COOLER TUBE AND CLAMP
   (See AT Section)
5. **REMOVE STIFFENER PLATE, FLYWHEEL HOUSING UNDER AND COVER DUST**
6. **DISCONNECT STARTER WIRE CLAMP**
7. **REMOVE CRANKSHAFT POSITION SENSOR**
8. **REMOVE OIL PAN**

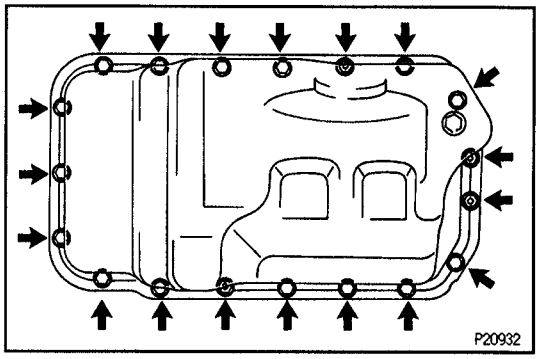

(a) Remove the 15 bolts and 4 nuts.

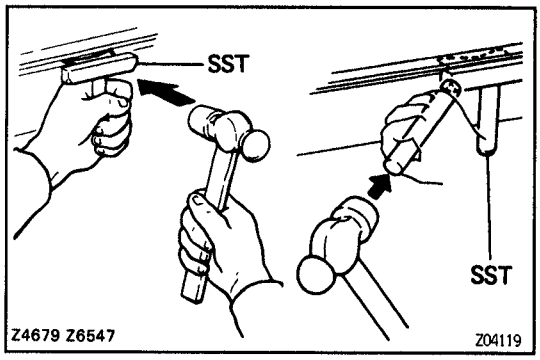

(b) Using SST and a brass bar, separate the oil pan from the cylinder block.
SST 09032–00100
HINT: When removing the oil pan, be careful not to damage the oil pan flange.

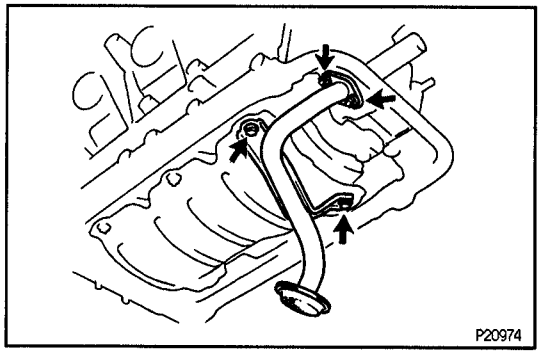

9. **REMOVE OIL STRAINER**
   Remove the bolt, 3 nuts and oil strainer and gasket.
10. **REMOVE OIL PAN BAFFLE PLATE.**
    Remove the 2 bolt, nut and oil pan baffle plate.

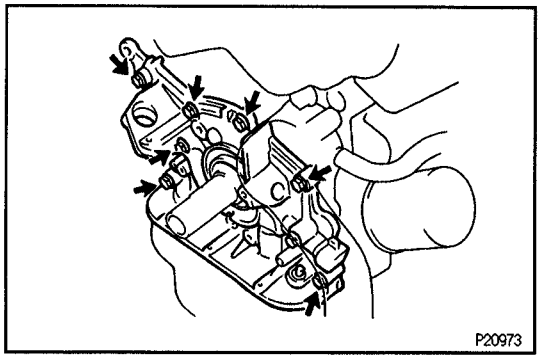

11. **REMOVE OIL PUMP**

(a) Remove the 8 bolts, ground strap and oil pump.
(b) Using a plastic–faced hammer, carefully tap the oil pump body.
(c) Remove the O–ring from the cylinder block.

EG

COMPONENTS FOR DISASSEMBLY AND ASSEMBLY

EG155-03

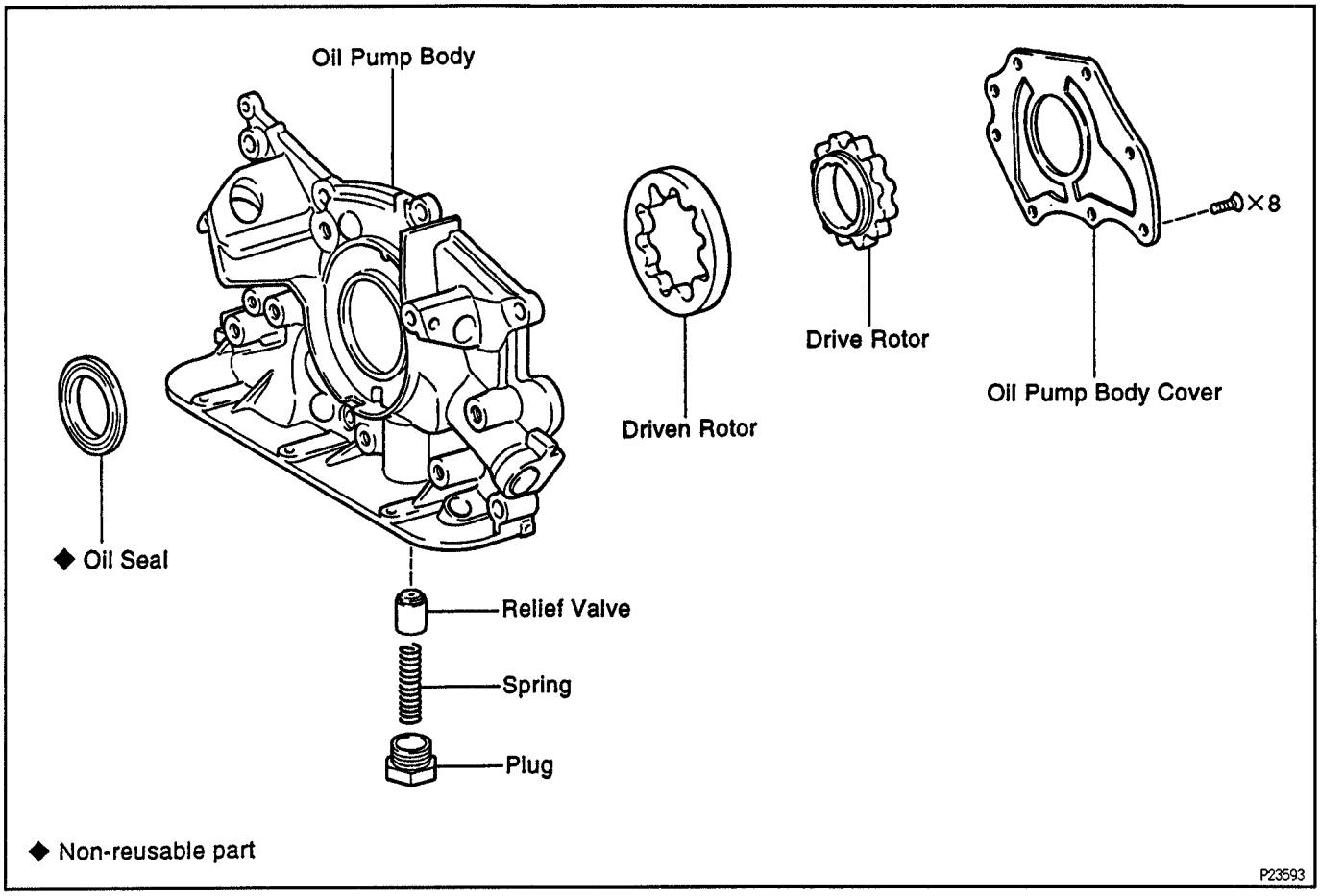

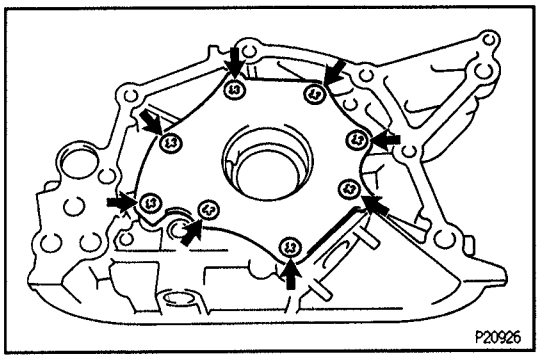

OIL PUMP DISASSEMBLY

EG58H-02

1. REMOVE DRIVEN AND DRIVE ROTORS

(a) Remove the 8 screws and pump body cover.
Torque: 10 N·m (105 kgf·cm, 8 ft·lbf)

(b) Remove the drive and driven rotors.

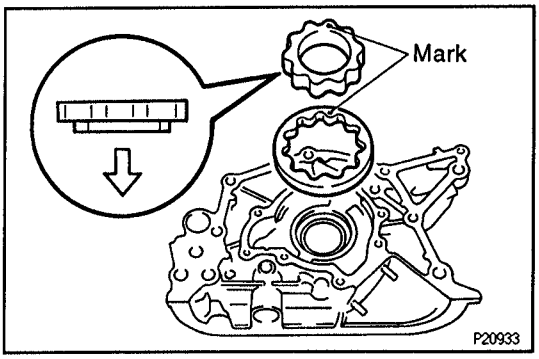

INSTALLATION HINT: Place the drive and driven rotor into pump body with the marks facing the pump body cover side.

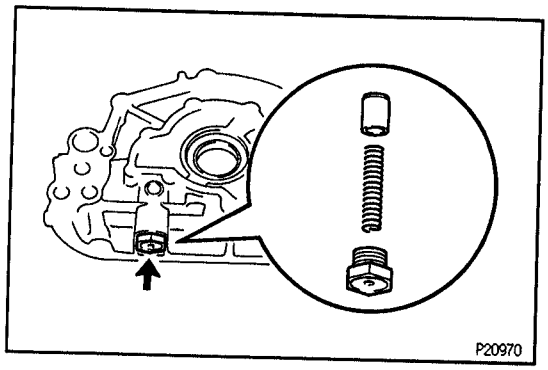

2. REMOVE RELIEF VALVE

(a) Unscrew the relief valve plug and gasket.

(b) Remove the spring and relief valve.

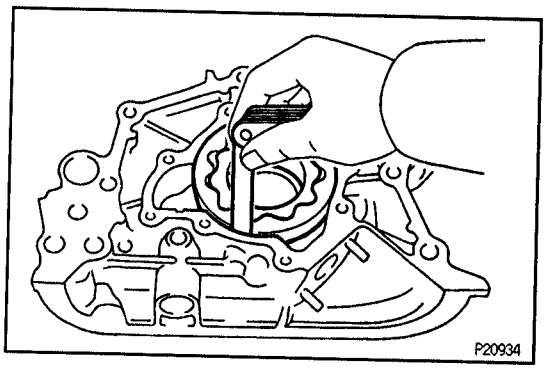

OIL PUMP INSPECTION

EG1CL–06

EG

1. INSPECT BODY CLEARANCE

Using a thickness gauge, measure the clearance between the driven rotor and pump body.

Standard clearance:

0.10 – 0.18 mm (0.0039 – 0.0069 in.)

Maximum clearance:

0.30 mm (0.0118 in.)

If the clearance is greater than the maximum, replace the oil pump rotor set and/or pump body.

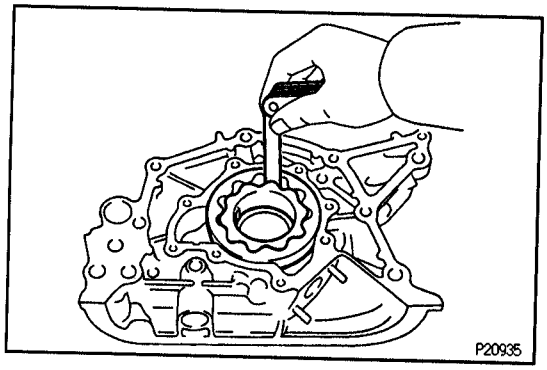

2. INSPECT TIP CLEARANCE

Using a thickness gauge, measure the clearance between the drive and driven rotors.

Standard clearance:

0.11 – 0.24 mm (0.0043 – 0.0094 in.)

Maximum clearance:

0.35 mm (0.0138 in.)

If the clearance is greater than the maximum, replace the oil pump rotor set.

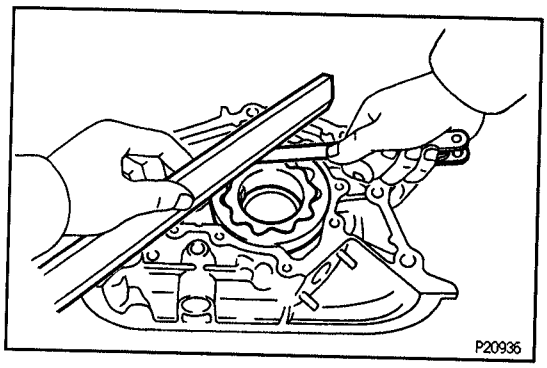

3. INSPECT SIDE CLEARANCE

Using a thickness gauge and precision straight edge, measure the side clearance, as shown.

Standard clearance:

0.03 – 0.09 mm (0.0012 – 0.0035 in.)

Maximum clearance:

0.15 mm (0.0059 in.)

If the clearance is greater than the maximum, replace the oil pump rotor set and/or pump body.

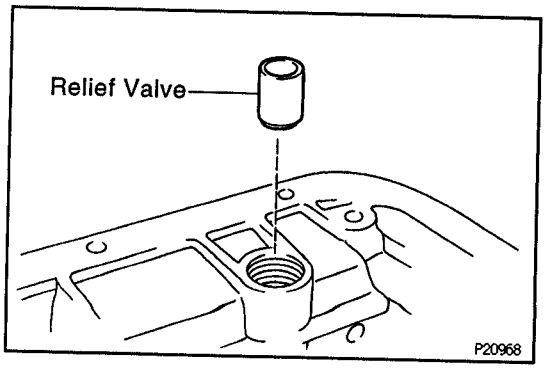

4. INSPECT RELIEF VALVE

Coat the relief valve with engine oil and check that it falls smoothly into the valve hole by its own weight. If the valve does not fall smoothly, replace the valve and/or oil pump assembly.

E0670-01

OIL PUMP ASSEMBLY

Assembly is in the reverse order of disassembly.

EG

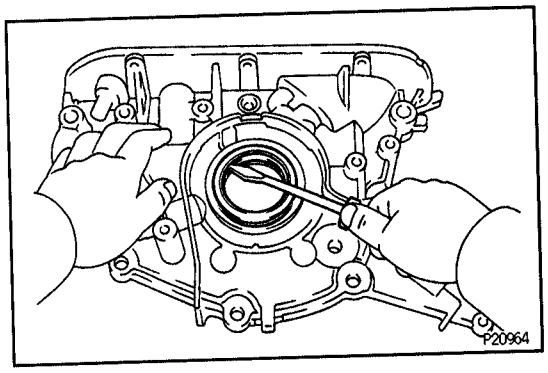

E0320L-05

CRANKSHAFT FRONT OIL SEAL REPLACEMENT

HINT: There are 2 methods (A and B) to replace the oil seal, which are as follows:

REPLACE CRANKSHAFT FRONT OIL SEAL

A. If oil pump is removed from cylinder block:

(a) Using a screwdriver, pry out the oil seal.

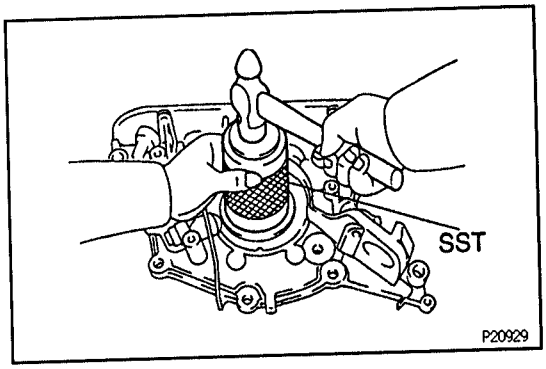

(b) Using SST and a hammer, tap in a new oil seal until its surface is flush with the oil pump body edge.
SST 09309-37010

(c) Apply MP grease to the oil seal lip.

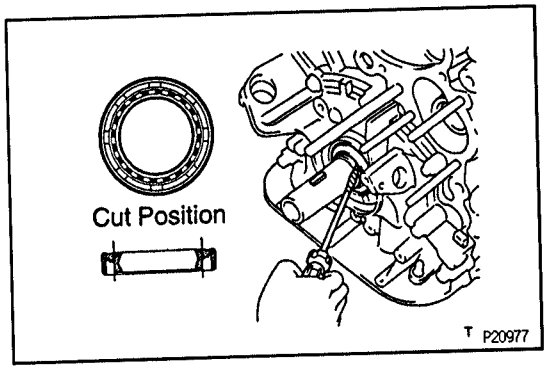

B. If oil pump is installed to the cylinder block:

(a) Using a knife, cut off the oil seal lip.

(b) Using a screwdriver, pry out the oil seal.
NOTICE: Be careful not to damage the crankshaft. Tape the screwdriver tip.

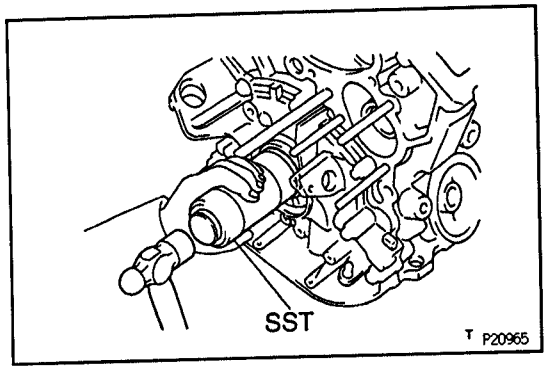

(c) Apply MP grease to a new oil seal lip.

(d) Using SST and a hammer, tap in the oil seal until its surface is flush with the oil pump body edge.
SST 09306-37010

OIL PUMP INSTALLATION

EG67D–01

1. INSTALL OIL PUMP

(a) Remove any old packing (FIPG) material and be careful not to drop any oil on the contact surfaces of the oil pump and cylinder block.

- Using a razor blade and gasket scraper, remove all the old packing (FIPG) material from the gasket surfaces and sealing grooves.
- Thoroughly clean all components to remove all the loose material.
- Using a non–residue solvent, clean both sealing surfaces.

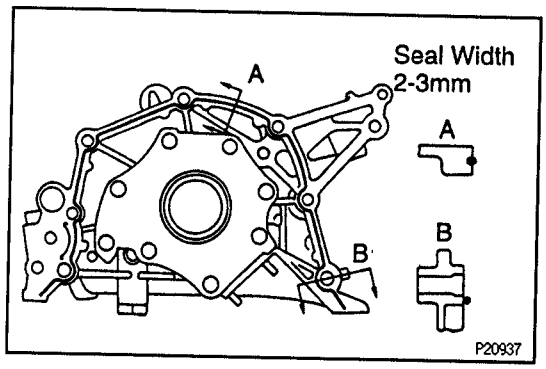

(b) Apply seal packing to the oil pump, as shown in the illustration.

Seal packing:

Part No. 08826–00080 or equivalent

- Install nozzle that has been cut out to a 2–3 mm (0.08–0.12 in.) opening.

HINT: Avoid applying an excessive amount to the surface.

- Parts must be assembled within 5 minutes of application. Otherwise the material must be removed and reapplied.
- Immediately remove nozzle from the tube and reinstall cap.

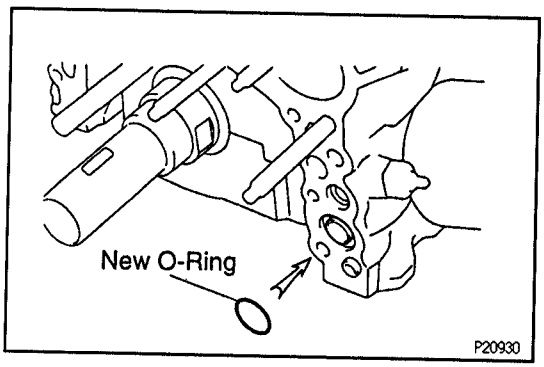

(c) Place a new O–ring into the groove of cylinder block.

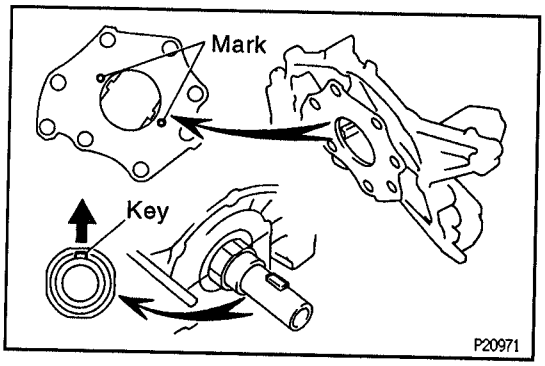

(d) Install the oil pump to the crankshaft with the spline teeth of the drive rotor engaged with the large teeth of the crankshaft.

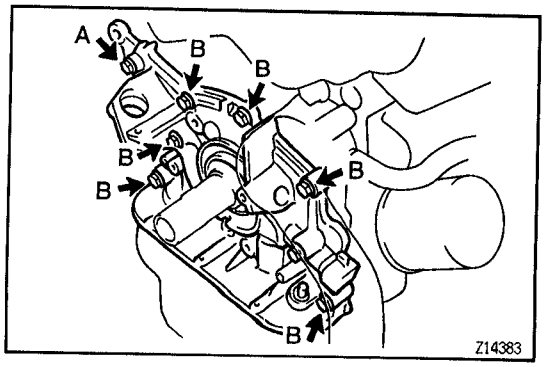

(e) Install the oil pump with the 8 bolts, and ground strap.

Torque:

Bolt A: 20 N·m (200 kgf·cm, 15 ft·lbf)

Bolt B: 42 N·m (420 kgf·cm, 31 ft·lbf)

2. INSTALL CRANK SHAFT POSITION SENSOR

3. INSTALL OIL PAN BAFFLE PLATE

4. INSTALL OIL STRAINER

Place a new gasket and install the oil strainer.

Torque: 7.5 N·m (76 kgf·cm, 66 in.·lbf)

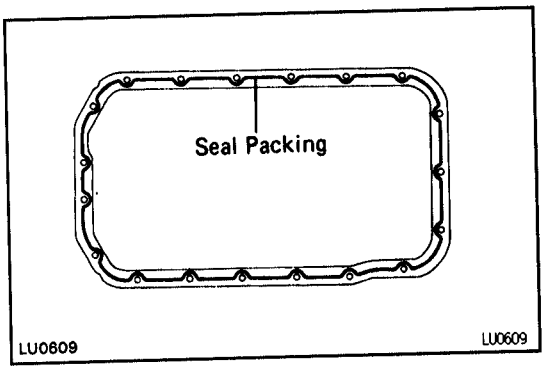

5. **CLEAN OIL PAN.**

Remove any old packing (FIPG) material and be careful not to drop any oil on the contacting surfaces of the, oil pan, cylinder block and sealing grooves.

- Using a razor blade and gasket scraper, remove all the remaining seal packing (FIPG) material from the gasket surfaces.
- Thoroughly clean all components to remove all the loose material.
- Clean both sealing surfaces with a non-residue solvent.

NOTICE: Do not use a solvent which will affect the painted surfaces.

6. **INSTALL OIL PAN**

(a) Apply seal packing to the oil pan, as shown in the illustration.

Seal packing:

Part No. 08826-00080 or equivalent

- Install a nozzle that has been cut to a 3 – 4 mm (0.12 – 0.16 in.) opening.

HINT: Avoid applying an excess amount to the surface.

- If parts are not assembled within 5 minutes of applying the seal packing, the effectiveness of the seal packing is lost and the seal packing must be removed and reapplied.
- Immediately remove the nozzle from the tube and reinstall the cap after using the seal packing.

(b) Install the oil pan with the 4 nuts and 15 bolts.

Torque: 7.6 N·m (78 kgf·cm, 67 in.·lbf)

7. **INSTALL FLYWHEEL HOUSING UNDER, COVER DUST AND STIFFENER PLATE**
8. **CONNECT STARTER WIRE CLAMP**
9. **A/T:**
   INSTALL OIL COOLER TUBE AND CLANP
   (See AT Section)
10. **INSTALL CRANKSHAFT TIMING PULLEY**
    (See timing belt installation in Engine Mechanical)
11. **4WD:**
    INSTALL FRONT DIFFERENTIAL
    (See SA Section)
12. **FILL WITH ENGINE OIL**
13. **START ENGINE AND CHECK FOR LEAKS**
14. **INSTALL ENGINE UNDER COVER**
15. **RECHECK ENGINE OIL LEVEL**

OIL COOLER

COMPONENTS FOR REMOVAL AND INSTALLATION

EG20M–06

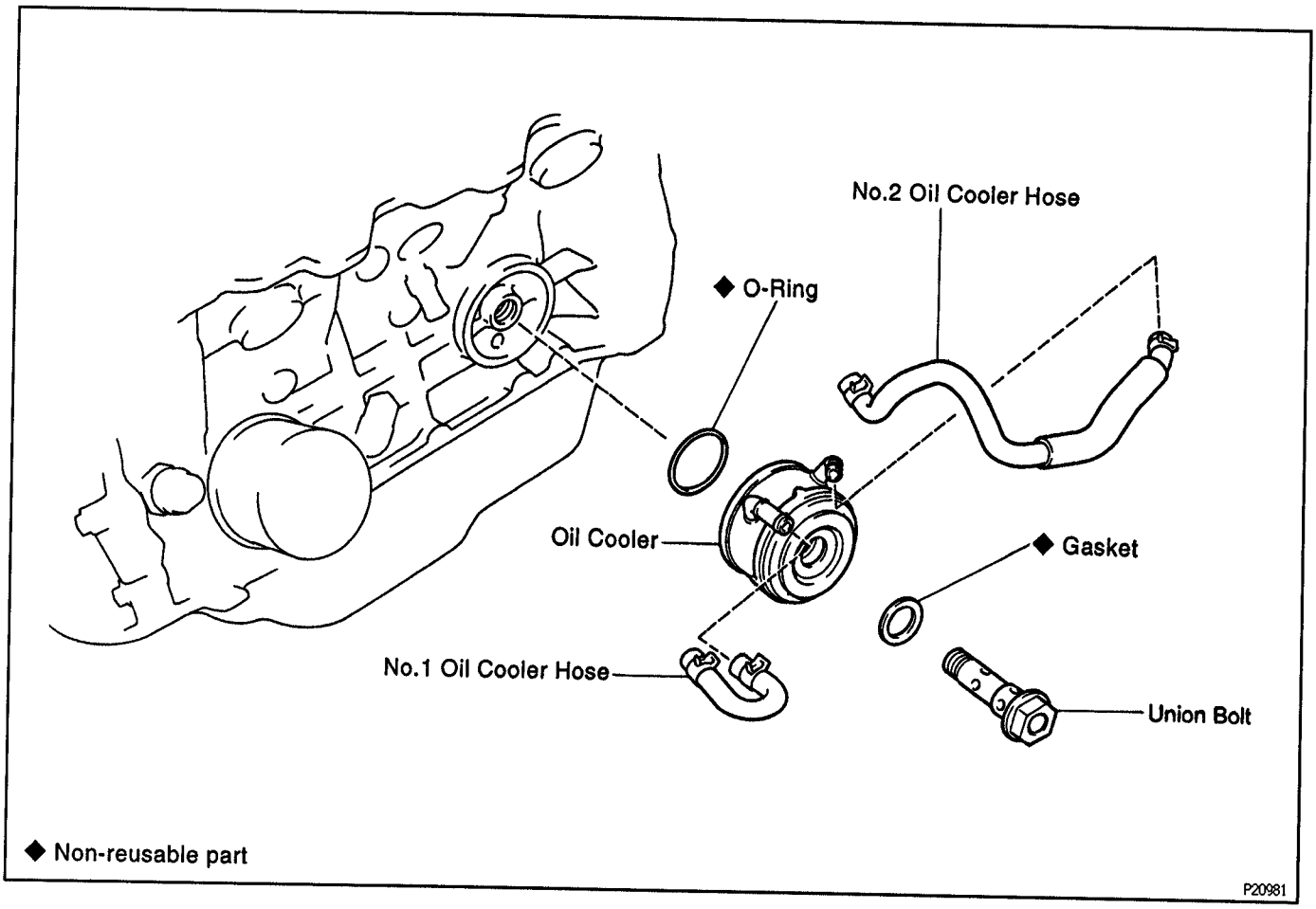

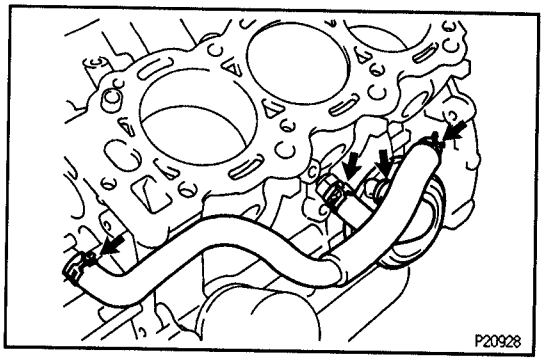

OIL COOLER REMOVAL

EG20N–06

1. **DRAIN ENGINE COOLANT**
2. **DISCONNECT OIL COOLER HOSES**
   Disconnect the No.1 and No.2 oil cooler hoses.

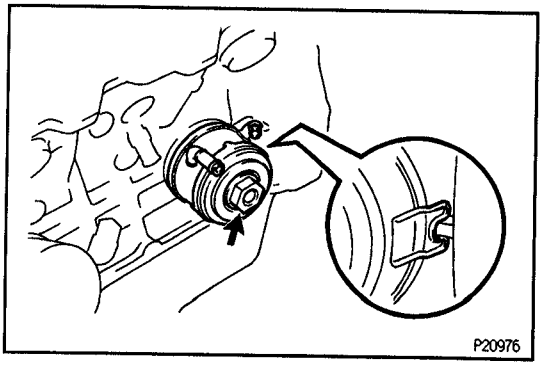

3. **REMOVE OIL COOLER**
   Remove the bolt, relief valve, gaskets and oil cooler.
   Torque: 59 N·m (600 kgf·cm, 43 ft·lbf)
   INSTALLATION HINT:
   - Replace the O–ring with a new part.
   - Use a new gasket to the relief valve.

EG1CZ-03

OIL COOLER INSPECTION

INSPECT OIL COOLER

Check the oil cooler for damage or clogging.
If necessary, replace the oil cooler.

EG

EG67E-01

OIL COOLER INSTALLATION

Installation is in the reverse order of removal.

SERVICE SPECIFICATIONS

SERVICE DATA

EG1D1-04

Oil pressure	At idle speed (normal operating temperature)		29 kPa (0.3 kgf/cm², 4.3 psi) or more
	At 3,000 rpm (normal operating temperature)		245 – 520 kPa (2.5 – 5.3 kgf/cm², 36 – 75 psi)
Oil pump	Body clearance	STD	0.10 – 0.18 mm (0.0039 – 0.0069 in.)
		Maximum	0.30 mm (0.0118 in.)
	Tip clearance	STD	0.11 – 0.24 mm (0.0043 – 0.0094 in.)
		Maximum	0.35 mm (0.0138 in.)
	Side clearance	STD	0.03 – 0.09 mm (0.0012 – 0.0035 in.)
		Maximum	0.15 mm (0.0059 in.)

EG1D2-06

TORQUE SPECIFICATIONS

Part tightened		N·m	kgf·cm	ft·lbf
Oil pressure switch x Cylinder block		15	150	11
Oil pump x Oil pump body cover		10	105	8
Oil pump x Cylinder block	A	20	200	14
	B	42	420	31
Oil strainer x Cylinder block		7.5	76	66 in.·lbf
Oil pan x Cylinder block		5.9	60	52 in.·lbf
Oil cooler x Relief valve		59	600	43

– MEMO –

5VZ-FE ENGINE TROUBLESHOOTING

HOW TO PROCEED WITH TROUBLESHOOTING ..... EG−194
CUSTOMER PROBLEM ANALYSIS CHECK SHEET ..... EG−195
DIAGNOSIS SYSTEM ..... EG−196
DTC CHART ..... EG−200
FAIL-SAFE CHART ..... EG−205
CHECK FOR INTERMITTENT PROBLEMS ..... EG−205
BASIC INSPECTION ..... EG−206
PARTS LOCATION ..... EG−209
STANDARD VALUE OF ECM TERMINALS ..... EG−210
ENGINE OPERATING CONDITION ..... EG−214
MATRIX CHART OF PROBLEM SYMPTOMS ..... EG−217
CIRCUIT INSPECTION
- DTC P0100
  - Mass Air Flow Circuit Malfunction ..... EG−218
- DTC P0101
  - Mass Air Flow Circuit Range/Performance Problem ..... EG−221
- DTC P0110
  - Intake Air Temp. Circuit Malfunction ..... EG−222
- DTC P0115
  - Engine Coolant Temp. Circuit Malfunction ..... EG−225
- DTC P0116
  - Engine Coolant Temp. Circuit Range/Performance Problem ..... EG−229
- DTC P0120
  - Throttle/Pedal Position Sensor/ Switch "A" Circuit Malfunction ..... EG−229
- DTC P0121
  - Throttle/Pedal Position Sensor/Switch "A" Circuit Range/Performance Problem ..... EG−232
- DTC P0125
  - Insufficient Coolant Temp. for Closed Loop Fuel Control ..... EG−233
- DTC P0130
  - Heated Oxygen Sensor Circuit Malfunction (Bank 1 Sensor 1) ..... EG−235
- DTC P0133
  - Heated Oxygen Sensor Circuit Slow Response (Bank 1 Sensor 1) ..... EG−237
- DTC P0135, P0141
  - Heated Oxygen Sensor Heater Circuit Malfunction (Bank 1 Sensor 1, Bank 1 Sensor 2) ..... EG−237
- DTC P0136
  - Heated Oxygen Sensor Circuit Malfunction (Bank 1 Sensor 2) ..... EG−238
- DTC P0171
  - System too Lean (Fuel Trim) ..... EG−239
- DTC P0172
  - System too Rich (Fuel Trim) ..... EG−239
- DTC P0300
  - Random/Multiple Cylinder Misfire Detected ..... EG−242
- DTC P0301, P0302, P0303, P0304, P0305, P0306
  - Misfire Detected (Cylinder 1-6) ..... EG−242
- DTC P0325, P0330
  - Knock Sensor Circuit Malfunction (Knock Sensor 1, Knock Sensor 2) ... EG−246
- DTC P0335
  - Crankshaft Position Sensor "A" Circuit Malfunction ..... EG−248
- DTC P0340
  - Camshaft Position Sensor Circuit Malfunction ..... EG−250
- DTC P0401
  - Exhaust Gas Recirculation Flow Insufficient Detected ..... EG−252
- DTC P0402
  - Exhaust Gas Recirculation Flow Excessive Detected ..... EG−259
- DTC P0420
  - Catalyst System Efficiency Below Threshold ..... EG−263
- DTC P0440
  - Evaporative Emission Control System Malfunction (Only for 4WD models) .. EG−265

DTC P0441
Evaporative Emission Control System
Incorrect Purge Flow
(For 2WD models) ..... EG−271
DTC P0441
Evaporative Emission Control System
Incorrect Purge Flow
(For 4WD models) ..... EG−275
DTC P0446
Evaporative Emission Control System
Vent Control Malfunction
(Only for 4WD models) ..... EG−275
DTC P0450
Evaporative Emission Control System
Pressure Sensor Malfunction
(Only for 4WD models) ..... EG−284
DTC P0500
Vehicle Speed Sensor Malfunction ... EG−286
DTC P0505
Idle Control System Malfunction ..... EG−288
DTC P0510
Closed Throttle Position Switch
Malfunction ..... EG−290
DTC P1300
Igniter Circuit Malfunction ..... EG−292
DTC P1335
Crankshaft Position Sensor Circuit
Malfunction (during engine running) .. EG−297
DTC P1500
Starter Signal Circuit Malfunction .... EG−297
DTC P1600
ECM BATT Malfunction ..... EG−299
DTC P1605
Knock Control CPU Malfunction ..... EG−300
DTC P1780
Park/Neutral Position Switch
Malfunction ..... EG−301
ECM Power Source Circuit ..... EG−303
A/C Idle-up Circuit ..... EG−305
Fuel Pump Control Circuit ..... EG−308
Fuel Pressure Control Circuit ..... EG−313

HOW TO PROCEED WITH TROUBLESHOOTING

Troubleshoot in accordance with the procedure on the following page.

Titles inside ▱ are titles of pages in this manual, with the page number indicated in the bottom portion. See the indicated pages for detailed explanations.

Vehicle Brought to Workshop

↓

(1) Customer Problem Analysis
P.EG-195

↓

(2) Connect the OBD II scan tool or TOYOTA hand-held tester to DLC3. P. EG-198
If the display indicates a communication fault in the tool, inspect DLC3.
See page EG-197

↓

(3) Check DTC and Freezed Frame Data (Precheck)
Record or Print DTC and Freezed Frame Data. P. EG-198

↓

(4) Clear DTC and Freezed Frame Data P. EG-199

↓

(5) Visual Inspection

↓

(6) Setting the Check Mode Diagnosis P. EG-199

↓

(7) Problem Symptom Confirmation
If the engine does not start, perform steps (10) and (12) first.

↓ Malfunction does not occur.

(8) Symptom Simulation P. IN-18

↓

(9) DTC Check P. EG-199

Malfunction occurs.

↓ Normal

(10) Basic Inspection P. EG-206

↓

(12) Matrix Chart Problem Symptoms P. EG-217

↓

(13) Circuit Inspection P. EG-218

↓

(14) Parts Inspection

↓

Identification of Problem

↓

(16) Adjustment, Repair

↓

(17) Confirmation Test

↓

End

↓ Malfunction code.

(11) DTC Chart P. EG-200

↓

(15) Check for Intermittent Problems P. EG-205

↓

Identification of Problem

CUSTOMER PROBLEM ANALYSIS CHECK SHEET

ENGINE CONTROL System Check Sheet

Inspector's Name _____

Customer's name		**Model and model year**	
Driver's name		**Frame no.**	
Date vehicle brought in		**Engine model**	
License no.		**Odometer reading**	km miles

EG

Problem Symptoms	☐ **Engine does not Start**	☐ Engine does not crank ☐ No initial combustion ☐ No complete combustion
	☐ **Difficult to Start**	☐ Engine cranks slowly ☐ Other _____
	☐ **Poor Idling**	☐ Incorrect first idle ☐ Idling rpm is abnormal [☐ High ☐ Low (rpm)] ☐ Rough idling ☐ Other _____
	☐ **Poor Driveability**	☐ Hesitation ☐ Back fire ☐ Muffler explosion (after-fire) ☐ Surging ☐ Knocking ☐ Other _____
	☐ **Engine Stall**	☐ Soon after starting ☐ After accelerator pedal depressed ☐ After accelerator pedal released ☐ During A/C operation ☐ Shifting from N to D ☐ Other _____
	☐ **Others**	

Dates Problem Occurred		
Problem Frequency		☐ Constant ☐ Sometimes (times per day/month) ☐ Once only ☐ Other _____
Conditions When Problem Occurs	**Weather**	☐ Fine ☐ Cloudy ☐ Rainy ☐ Snowy ☐ Various/Other_____
	Outdoor Temperature	☐ Hot ☐ Warm ☐ Cool ☐ Cold (approx.____°F /____°C)
	Place	☐ Highway ☐ Suburbs ☐ Inner City ☐ Uphill ☐ Downhill ☐ Rough road ☐ Other _____
	Engine Temp.	☐ Cold ☐ Warming up ☐ After warming up ☐ Any temp. ☐ Other_____
	Engine Operation	☐ Starting ☐ Just after starting [min.] ☐ Idling ☐ Racing ☐ Driving ☐ Constant speed ☐ Acceleration ☐ Deceleration ☐ A/C switch ON/OFF ☐ Other _____

Condition of Malfunction Indicator Lamp		☐ Remains on ☐ Sometimes lights up ☐ Does not light up
DTC Inspection	**Normal Mode (Precheck)**	☐ Normal ☐ Malfunction code(s) [code] ☐ Freezed frame data [ ]
	Check Mode	☐ Normal ☐ Malfunction code(s) [code] ☐ Freezed frame data [ ]

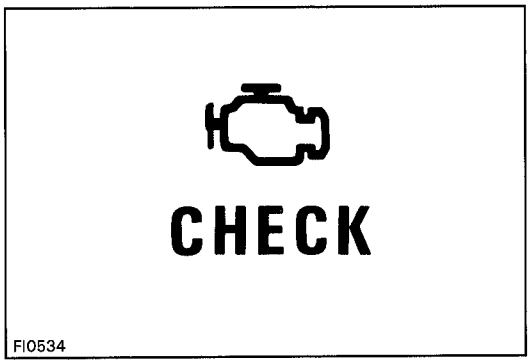

EG

DIAGNOSIS SYSTEM

DESCRIPTION

When troubleshooting OBD II vehicles, the only difference from the usual troubleshooting procedure is that you connect to the vehicle the OBD II scan tool complying with SAE J1978 or TOYOTA hand-held tester, and read off various data output from the vehicle's ECM.

OBD II regulations require that the vehicle's on-board computer lights up the Malfunction Indicator Lamp (MIL) on the instrument panel when the computer detects a malfunction in the computer itself or in drive system components which affect vehicle emissions. In addition to the MIL lighting up when a malfunction is detected, the applicable Diagnostic Trouble Codes (DTC) prescribed by SAE J2012 are recorded in the ECM memory. (See page EG-200)

If the malfunction does not recur in 3 trips, the MIL goes off but the DTC remain recorded in the ECM memory.

To check the DTC, connect the OBD II scan tool or TOYOTA hand-held tester to Data Link Connector 3 (DLC3) on the vehicle. The OBD II scan tool or TOYOTA hand-held tester also enables you to erase the diagnostic trouble codes and check freezed frame data and various forms of engine data. (For operating instructions, see the OBD II scan tool's instruction book.)

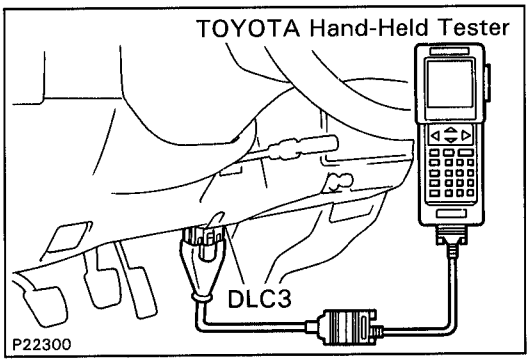

DTC include SAE controlled codes and Manufacturer controlled codes.
SAE controlled codes must be set as prescribed by the SAE, while Manufacturer controlled codes can be set freely by the manufacturer within the prescribed limits.
(See DTC chart on page EG-200)

The diagnosis system operates in normal mode during normal vehicle use. It also has a check mode for technicians to simulate malfunction symptoms and troubleshoot. Most DTC use 2 trip detection logic* to prevent erroneous detection and ensure thorough malfunction detection. By switching the ECM to check mode when troubleshooting, the technician can cause the MIL to light up for a malfunction that is only detected once or momentarily.
(TOYOTA hand-held tester only)
(See page EG-198)

*2 trip detection logic
When a logic malfunction is first detected, the malfunction is temporarily stored in the ECM memory. If the same malfunction is detected again during the second drive test, this second detection causes the MIL to light up.
The 2 trip repeats the same mode a 2nd time. (However, the IG switch must be turned OFF between the 1st trip and 2nd trip.)

Freeze frame data:

Freeze frame data records the engine condition when a misfire (DTC P0300 ~ P0306) or fuel trim malfunction (DTC P0171, P0172), or other malfunction (first malfunction only), is detected.

Because freeze frame data records the engine conditions (fuel system, calculator load, engine coolant temperature, fuel trim, engine speed, vehicle speed, etc.) when the malfunction is detected, when troubleshooting it is useful for determining whether the vehicle was running or stopped, the engine warmed up or not, the air-fuel ratio lean or rich, etc. at the time of the malfunction.

Priorities for Troubleshooting

If troubleshooting priorities for multiple diagnostic codes are given in the applicable diagnostic chart, these should be followed.

If no instructions are given troubleshoot DTC according to the following priorities.

① DTC other than fuel trim malfunction (DTC P0171, P0172), EGR (DTC P0401, P0402), and misfire (DTC P0300 ~ P0306).

② Fuel trim malfunction (DTC P0171, P0172) and EGR (DTC P0401, P0402).

③ Misfire (DTC P0300 ~ P0306).

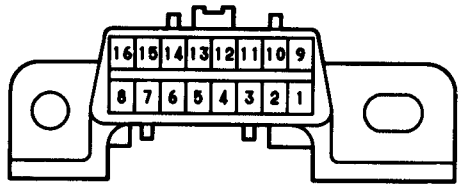

DLC3

N09214

DATA LINK CONNECTOR 3 (DLC3) INSPECTION

The vehicle's ECM uses V.P.W. (Variable Pulse Width) for communication to comply with SAE J1850. The terminal arrangement of DLC3 complies with SAE J1962 and matches the V.P.W. format.

Terminal No.	Connection	Voltage or Resistance	Condition
2	Bus ⊕ Line	Pulse generation	During transmission
4	Chassis Ground	↔ Body Ground 1 Ω or less	Always
5	Signal Ground	↔ Body Ground 1 Ω or less	Always
16	Battery Positive	↔ Body Ground 9 ~ 14 V	Always

HINT: If you display shows "UNABLE TO CONNECT TO VEHICLE" when you have connected the cable of the OBD II scan tool or TOYOTA hand-held tester to DLC3, turned the ignition switch ON and operated the scan tool, there is a problem on the vehicle side or tool side.

(1) If communication is normal when the tool is connected to another vehicle, inspect DLC3 on the original vehicle.

(2) If communication is still not possible when the tool is connected to another vehicle, the problem is probably in the tool itself, so consult the Service Department listed in the tool's instruction manual.

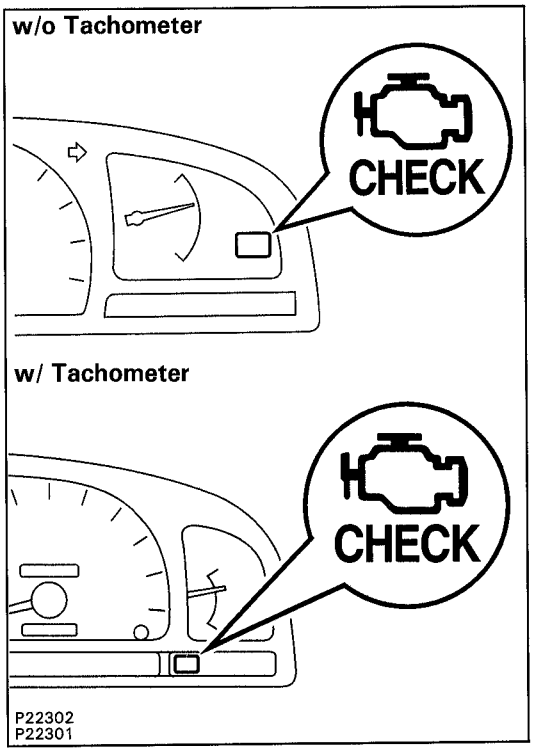

EG

Diagnosis Inspection (Normal Mode)

MALFUNCTION INDICATOR LAMP (MIL) CHECK

1. The MIL comes on when the ignition switch is turned ON and the engine is not running.

   HINT: If the MIL does not light up, troubleshoot the combination meter (See page BE-33).

2. When the engine is started, the MIL should go off. If the lamp remains on, the diagnosis system has detected a malfunction or abnormality in the system.

DIAGNOSTIC TROUBLE CODE (DTC) CHECK

NOTICE (TOYOTA hand-held tester only): When the diagnosis system is switched from normal mode to check mode, it erases all DTC and freezed frame data recorded in normal mode. So before switching modes, always check the DTC and freezed frame data, and note them down.

1. Prepare the OBD II scan tool (complying with SAE J1978) or TOYOTA hand-held tester.
2. Connect the OBD II scan tool or TOYOTA hand-held tester to DLC3 at the lower of the instrument panel.
3. Turn the ignition switch ON and switch the OBD II scan tool or TOYOTA hand-held tester main switch ON.
4. Use the OBD II scan tool or TOYOTA hand-held tester to check the DTC and freezed frame data, note them down. (For operating instructions, see the OBD II scan tool's instruction book.)
5. See page EG-200 to confirm the details of the DTC.

NOTICE: When simulating symptoms with an OBD II scan tool (excluding TOYOTA hand-held tester) to check the DTC, use normal mode. For codes on the DTC chart subject to "2 trip detection logic", turn the ignition switch OFF after the symptom is simulated the first time. Then repeat the simulation process again. When the problem has been simulated twice, the MIL lights up and the DTC are recorded in the ECM.

Diagnosis Inspection (Check Mode)

TOYOTA HAND-HELD TESTER only

Compared to the normal mode, the check mode has an increased sensitivity to detect malfunctions.

Futhermore, the same diagnostic items which are detected in the normal mode can also be detected in the check mode.

DTC CHECK

1. Initial conditions.
(a) Battery positive voltage 11 V or more.
(b) Throttle valve fully closed.
(c) Transmission in park or neutral position.
(d) Air conditioning switched OFF.
2. Turn ignition switch OFF.
3. Prepare the TOYOTA hand-held tester.
4. Connect the TOYOTA hand-held tester to DLC3 at the lower of the instrument panel.
5. Turn the ignition switch ON and push the TOYOTA hand-held tester main switch ON.
6. Switch the TOYOTA hand-held tester normal mode to check mode. (Check that the MIL flashes.)
7. Start the engine. (The MIL goes out after the engine start.)
8. Simulate the conditions of the malfunction described by the customer.

   NOTICE: Leave the ignition switch ON until you have checked the DTC, etc.
9. After simulating the malfunction conditions, use the TOYOTA hand-held tester diagnosis selector to check the DTC and freezed frame data, etc.

   HINT: Take care not to turn the ignition switch OFF. Turning the ignition switch OFF switches the diagnosis system from check mode to normal mode, so all diagnostic codes, etc. are erased.
10. After checking the DTC, inspect the applicable circuit.

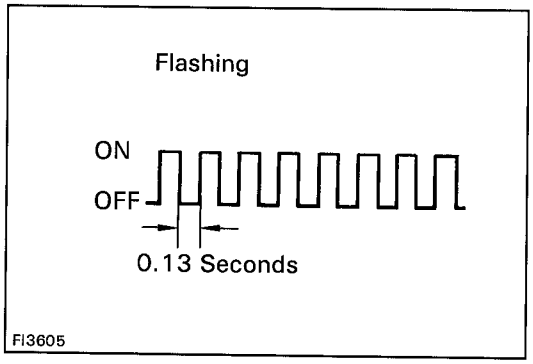

DTC CLEARANCE

The following actions will erase the DTC and freezed frame data.

1. Operating the OBD II scan tool (complying with SAE J1978) or TOYOTA hand-held tester to erase the codes. (See the OBD II scan tool's instruction book for operating instructions.)
2. Disconnecting the battery terminals or EFI fuse.

NOTICE: If the TOYOTA hand-held tester switches the ECM from normal mode to check mode or vice-versa, or if the ignition switch is turned from ON to ACC or OFF during check mode, the DTC and freezed frame data will be erased.

DTC CHART (SAE Controlled)

HINT: Parameters listed in the chart may not be exactly the same as your reading due to the type of instrument or other factors.

If a malfunction code is displayed during the DTC check in check mode, check the circuit for that code listed in the table below. For details of each code, turn to the page reffered to under the "See Page" for the respective "DTC No." in the DTC chart.

DTC No. (See Page)	Detection Item	Trouble Area	MIL*	Memory
P0100 (EG-218)	Mass Air Flow Circuit Malfunction	• Open or short in mass air flow meter circuit • Mass air flow meter • ECM	○	○
P0101 (EG-221)	Mass Air Flow Circuit Range/Performance Probelm	• Mass air flow meter	○	○
P0110 (EG-222)	Intake Air Temp. Circuit Malfunction	• Open or short in intake air temp. sensor circuit • Intake air temp. sensor • ECM	○	○
P0115 (EG-225)	Engine Coolant Temp. Circuit Malfunction	• Open or short in engine coolant temp. sensor circuit • Engine coolant temp. sensor • ECM	○	○
P0116 (EG-229)	Engine Coolant Temp. Circuit Range/ Performance Problem	• Engine coolant temp. sensor • Cooling system	○	○
P0120 (EG-229)	Throttle/Pedal Position Sensor/Switch "A" Circuit Malfunction	• Open or short in throttle position sensor circuit • Throttle position sensor • ECM	○	○
P0121 (EG-231)	Throttle/Pedal Position Sensor/Switch "A" Circuit Range/ Performance Problem	• Throttle position sensor	○	○
P0125 (EG-233)	Insufficient Coolant Temp. for Closed Loop Fuel Control	• Open or short in heated oxygen sensor circuit • Heated oxygen sensor	○	○
P0130 (EG-235)	Heated Oxygen Sensor Circuit Malfunction (Bank 1 Sensor 1)	• Heated oxygen sensor • Fuel trim malfunction	○	○
P0133 (EG-237)	Heated Oxygen Sensor Circuit Slow Response (Bank 1 Sensor 1)	• Heated oxygen sensor	○	○

*: ○ ··· MIL lights up

DTC CHART (Cont'd)

DTC No. (See Page)	Detection Item	Trouble Area	MIL*	Memory
P0135 (EG-237)	Heated Oxygen Sensor Heater Circuit Malfunction (Bank 1 Sensor 1)	• Open or short in heater circuit of heated oxygen sensor • Heated oxygen sensor heater • ECM	○	○
P0136 (EG-238)	Heated Oxygen Sensor Circuit Malfunction (Bank 1 Sensor 2)	• Heated oxygen sensor	○	○
P0141 (EG-237)	Heated Oxygen Sensor Heater Circuit Malfunction (Bank 1 Sensor 2)	• Same as DTC No. P0135	○	○
P0171 (EG-239)	System too Lean (Fuel Trim)	• Air intake (hose loose) • Fuel line pressure • Injector blockage • Heated oxygen sensor malfunction • Mass air flow meter • Engine coolant temp. sensor	○	○
P0172 (EG-239)	System too Rich (Fuel Trim)	• Fuel line pressure • Injector leak, blockage • Heated oxygen sensor malfunction • Mass air flow meter • Engine coolant temp. sensor	○	○
P0300 (EG-242)	Random/Multiple Cylinder Misfire Detected	• Ignition system • Injector • Fuel line pressure • EGR • Compression pressure • Valve clearance not to specification • Valve timing • Mass air flow meter • Engine coolant temp. sensor	○	○
P0301 P0302 P0303 P0304 P0305 P0306 (EG-242)	Misfire Detected – Cylinder 1 – Cylinder 2 – Cylinder 3 – Cylinder 4 – Cylinder 5 – Cylinder 6			
P0325 (EG-246)	Knock Sensor 1 Circuit Malfunction	• Open or short in knock sensor 1 circuit • Knock sensor 1 (looseness) • ECM	○	○
P0330 (EG-246)	Knock Sensor 2 Circuit Malfunction	• Open or short in knock sensor 2 circuit • Knock sensor 2 (looseness) • ECM	○	○

*: ○ ··· MIL lights up

EG

DTC CHART (Cont'd)

DTC No. (See Page)	Detection Item	Trouble Area	MIL*	Memory
P0335 (EG-248)	Crankshaft Position Sensor Circuit "A" Malfuntction	• Open or short in crankshaft position sensor circuit • Crankshaft position sensor • Starter • ECM	○	○
P0340 (EG-250)	Camshaft Position Sensor Circuit Malfunction	• Open or short in camshaft position sensor circuit • Camshaft position sensor • Starter • ECM	○	○
P0401 (EG-252)	Exhaust Gas Recirculation Flow Insufficient Detected	• EGR valve stuck closed • Short in VSV circuit for EGR • Open in EGR gas temp. sensor circuit • EGR hose disconnceted • ECM	○	○
P0402 (EG-259)	Exhaust Gas Recirculation Flow Excessive Detected	• EGR valve stuck open • EGR VSV open malfunction • Open in VSV circuit for EGR • Short in EGR gas temp. sensor circuit • ECM	○	○
P0420 (EG-263)	Catalyst System Efficiency Below Threshold	• Three-way catalytic converter • Open or short in heated oxygen sensor circuit • Heated oxygen sensor	○	○
P0440 (EG-265)	Evaporative Emission Control System Malfunction (Only for 4WD models)	• Vapor pressure sensor • Incorrect installation of fuel tank cap • Fuel tank cap • VSV for vapor pressure • Vacuum hose damaged, blocked or disconnected • Pipe or hose damaged or insufficient seal • Fuel tank • ECM	○	○
P0441 (EG-271)	Evaporative Emission Control System Incorrect Purge Flow (For 2WD models)	• Open or short in VSV circuit for EVAP • VSV for EVAP • ECM • Vacuum hose blocked or disconnected • Charcoal canister	○	○

*: ○ ··· MIL lights up

DTC CHART (Cont'd)

DTC No. (See Page)	Detection Item	Trouble Area	MIL*	Memory
P0441 (EG-275)	Evaporative Emission Control System Incorrect Purge Flow (For 4WD models)	• Open or short in VSV circuit for EVAP • VSV for EVAP • Open in vapor pressure sensor circuit • Vapor pressure sensor • Short in VSV circuit for vapor pressure sensor • ECM • Vacuum hose blocked or disconnected • Charcoal canister	○	○
P0446 (EG-275)	Evaporative Emission Control System Vent Control Malfunction (Only for 4WD models)	• Open or short in VSV circuit for vapor pressure sensor • Vapor pressure sensor • Open or short vapor pressure sensor circuit • Charcoal canister • Vacuum hose damaged or disconnected • ECM	○	○
P0450 (EG-284)	Evaporative Emission Control System Pressure Sensor Malfunction (Only for 4WD models)	• Open or short in vapor pressure sensor circuit • Vapor pressure sensor • ECM	○	○
P0500 (EG-286)	Vehicle Speed Sensor Malfunction	• Open or short in vehicle speed sensor circuit • Vehicle speed sensor • Combination meter • ECM	○	○
P0505 (EG-288)	Idle Control System Malfunction	• IAC valve is stuck or closed • Open or short in IAC valve circuit • VSV for A/C idle-up • Air intake (hose loose)	○	○
P0510 (EG-290)	Closed Throttle Position Switch Malfunction	• Open in closed throttle position switch circuit • Closed throttle position switch • ECM	○	○

*: ○ ··· MIL lights up

DTC CHART (Manufacturer Controlled)

DTC No. (See Page)	Detection Item	Trouble Area	MIL*	Memory
P1300 (EG-292)	Igniter Circuit Malfunction	• Open or short in IGF or IGT circuit from igniter to ECM • Igniter • ECM	○	○
P1335 (EG-297)	Crankshaft Position Sensor Circuit Malfunction (during engine running)	• Open or short in crankshaft position sensor circuit • Crankshaft position sensor • ECM	–	○
P1500 (EG-297)	Starter Signal Circuit Malfunction	• Open or short in starter signal circuit • Open or short in ignition switch or starter relay circuit • ECM	–	○
P1600 (EG-299)	ECM BATT Malfunction	• Open in back up power source circuit • ECM	○	○
P1605 (EG-300)	Knock Control CPU Malfunction	• ECM	○	○
P1780 (EG-301)	Park/Neutral Position Switch Malfunction	• Short in park/neutral position switch circuit • Park/neutral position switch • ECM	○	○

*: – ··· MIL does not light up
○ ··· MIL lights up

FAIL-SAFE CHART

If any of the following codes is recorded, the ECM enters fail-safe mode.

DTC No.	Fail-Safe Operation	Fail-Safe Deactivation Conditions
P0100	• Ignition timing fixed at 10° BTDC • Injection time fixed Starting ..... 12.4 m sec. CTP switch ON ..... 3.2 m sec. CTP switch OFF ..... 5.0 m sec.	Returned to normal condition
P0110	Intake air temp. is fixed at 20°C (68°F)	Returned to normal condition
P0115	Engine coolant temp. is fixed at 80°C (176°F)	Returned to normal condition
P0120	VTA is fixed at 0°	The following condition must be repeated at least 2 times consecutively When closed throttle position switch is ON: 0.1 V ≦ VTA ≦ 0.95 V
P0135 P0141	The heater circuit in which an abnormality is detected is turned off	Ignition switch OFF
P0325 P0330	Max. timing retardation	Ignition switch OFF
P1300	Fuel cut	IGF signal is detected for 6 consective ignitions
P1605	Max. timing retardation	Returned to normal condition

Back-Up Function

If there is truoble with the program in the ECM and ignition signals (IGT) are not output from the microcomputer, the ECM controls fuel injection and ignition timing at predetermined levels as a back-up function to make it possible to continue to operate the vehicle.
Furthermore, the injection duration is calculated from the starting signal (STA) and the closed throttle position switch signal (IDL). Also, the ignition timing is fixed at the initial ignition timing, 5° BTDC, without relation to the engine speed.

HINT: If the engine is controlled by the back-up function, the MIL lights up to warn the driver of the malfunction but the DTC is not output.

CHECK FOR INTERMITTENT PROBLEMS

TOYOTA HAND-HELD TESTER only

By putting the vehicle's ECM in check mode, 1 trip detection logic is possible instead of 2 trip detection logic and sensitivity to detect open circuits is increased. This makes it easier to detect intermittent problems.

CLEAR DIAGNOSTIC TROUBLE CODES

See page EG-199

SET CHECK MODE

See page EG-199

PERFORM A SIMULATION TEST

See page IN-18

CONNECTOR CONNECTION AND TERMINAL INSPECTION

See page IN-24

VISUAL CHECK AND CONTACT PRESSURE

See page IN-24

CONNECTOR HANDLING

See page IN-24

BASIC INSPECTION

When the malfunction code is not confimed in the DTC check, troubleshooting should be performed in the order for all possible circuits to be considered as the causes of the problems.
In many cases, by carrying out the basic engine check shown in the following flow chart, the location causing the problem can be found quickly and efficiently. Therefore, use of this check is essential in engine troubleshooting.

EG

1 **Is battery positive voltage 11 V or more when engine is stopped?**

YES

NO → **Charge or replace battery.**

2 **Is engine cranked?**

YES

NO → **Proceed to page ST section and continue to troubleshoot.**

3 **Does engine start?**

YES

NO → **Go to step 7 .**

4 **Check air filter.**

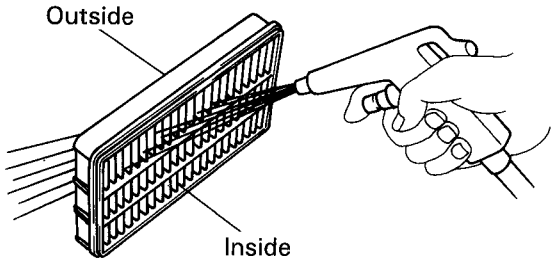

P00495

P Remove air filter.

C Visually check that the air cleaner element is not dirty or excessively oily.

HINT: If necessary, clean element with compressed air. First blow from inside thoroughly, then blow from outside of element.

OK

NG → **Repair or replace.**

5 Check idle speed.

P (1) Warm up engine to normal operating temperature.
(2) Switch off all accessories.
(3) Switch off all conditioning.
(4) Shift transmission into "N" position.
(5) Connect the OBD II scan tool or TOYOTA hand-held tester to DLC3 on the vehicle.

C Use CURRENT DATA to check the engine idle speed.

OK **Idle speed: 650 — 750 rpm**

EG

OK

NG **Proceed to matrix chart of problem symptoms on page EG-217.**

6 Check ignition timing.

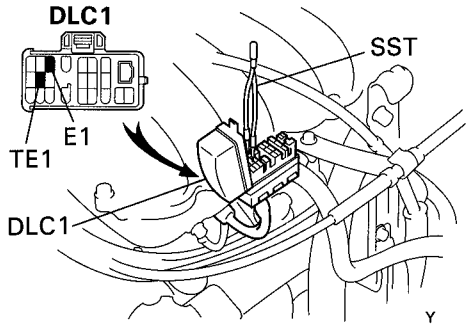

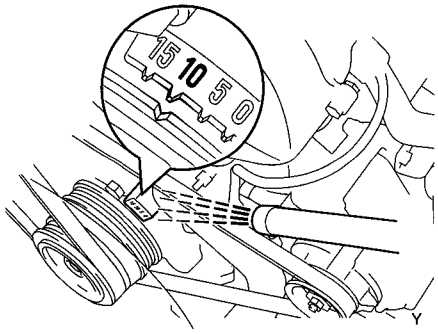

P19970
P21121

P (1) Warm up engine to normal operating temperature.
(2) Shift transmission into "N" position.
(3) Keep the engine speed at idle.
(4) Using SST, connect terminals TE1 and E1 of DLC1.
SST 09843—18020
(5) Connect a timing light, connect the tester to No.1 high-tension cord.

C Check ignition timing.

OK **Ignition timing: 8 — 12 °BTDC at idle**

OK

NG **Proceed to IG section and continue to troubleshoot.**

Proceed to matrix chart of problem symptoms on page EG-217.

7 Check fuel pressure.

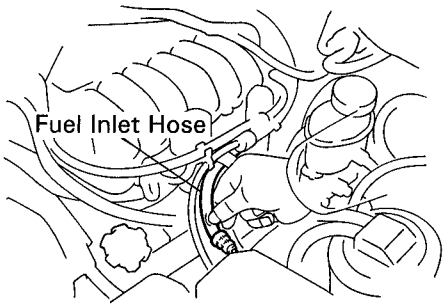

P23590

P (1) Be sure that enough fuel is in the tank.
(2) Turn ignition switch ON.
(3) Connect the TOYOTA hand-held tester to DLC3 on the vehicle.
(4) Use ACTIVE TEST mode to operate the fuel pump.
(5) If you have no TOYOTA hand-held tester, connect the positive (+) and negative (−) leads from the battery to the fuel pump conncetor (See page EG-124).

C Check for fuel pressure in the fuel inlet hose when it is pinched off.

HINT: At this time, you will hear a fuel flowing noise.

OK

NG → **Proceed to page EG-121 and continue to troubleshoot.**

8 Check for spark.

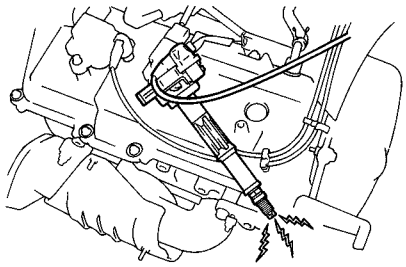

P21163

P (1) Remove the ignition coil or disconnect the high-tension cord from spark plug.
(See page IG section)
(2) Remove the spark plug.
(3) Install the spark plug to the ignition coil or high-tension cord.
(4) Ground the spark plug.
(5) Disconnect the injector connector.

C Check if spark occurs while engine is being cranked.

NOTICE: To prevent excess fuel being injected from the injectors during this test, don't crank the engine for more than 5 — 10 seconds at a time.

OK

NG → **Proceed to page IG section and continue to troubleshoot.**

Proceed to matrix chart of problem systems on page EG-217.

PARTS LOCATION

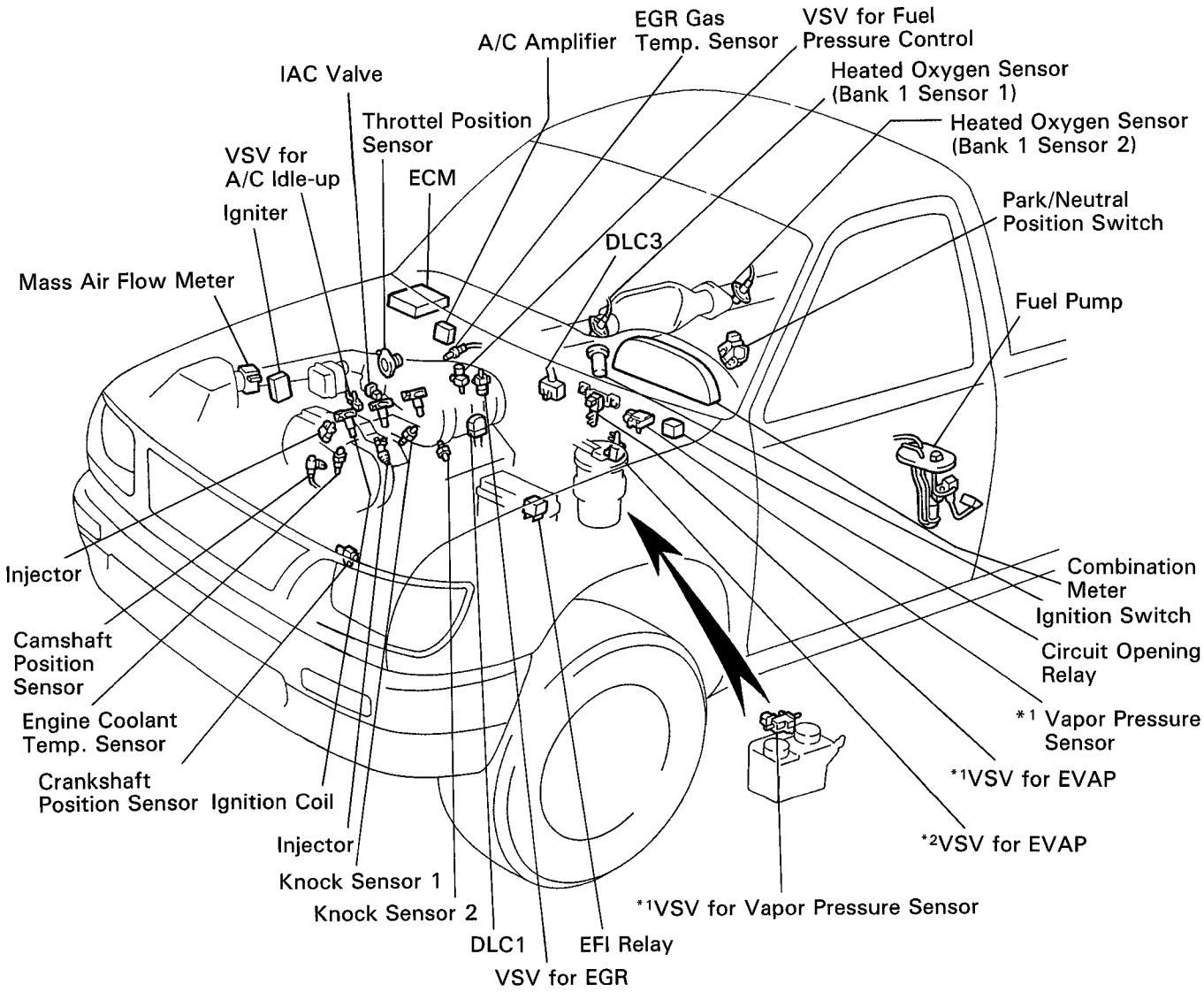

*1: 4WD
*2: 2WD

S00250

STANDARD VALUE OF ECM TERMINALS

When measuring the voltage or resistance of the connector part of the ECM, always insert the test probe into the connector from the wire harness side.

ECM Terminals (for A/T)

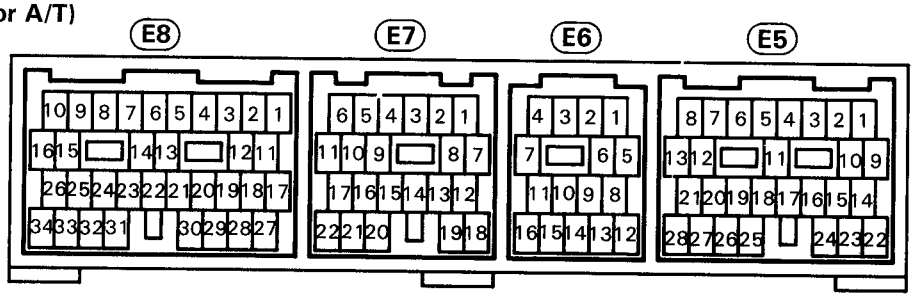

Symbols (Terminals No.)	Wiring Color	STD Voltage (V)	Condition
BATT (E5-14) – E1 (E6-16)	B-Y ↔ BR	9 – 14	Always
+B (E5-22) – E1 (E6-16)	W-R ↔ BR	9 – 14	IG switch ON
VCC (E7-1) – E2 (E7-22)	G-B ↔ BR-B	4.5 – 5.5	IG switch ON
IDL (E8-32) – E2 (E7-22)	Y-L ↔ BR-B	0 – 3.0	IG switch ON and apply vacuum to the throttle opener. Throttle valve fully closed
		9 – 14	IG switch ON Throttle valve fully open
VTA (E7-7) – E2 (E7-22)	Y ↔ BR-B	0.3 – 0.8	IG switch ON Throttle valve fully closed
		3.2 – 4.9	IG switch ON Throttle valve fully open
VG (E7-8) – E3 (E7-18)	GR-R ↔ BR-W	1.1 – 1.5	Idling, P or N position, A/C switch OFF
THA (E7-14) – E2 (E7-22)	Y-G ↔ BR-B	0.5 – 3.4	Idling, Intake air temp. 20°C (68°F)
THW (E7-20) – E2 (E7-22)	G-R ↔ BR-B	0.2 – 1.0	Idling, Engine coolant temp. 80°C (176°F)
STA (E8-13) – E1 (E6-16)	B-W ↔ BR	6.0 or more	Cranking
#10 (E8-10) #20 (E8-9) #30 (E8-8) #40 (E8-7) #50 (E8-6) #60 (E8-5) – E01 (E8-34)	W-R W W-G Y-R W-L Y-B ↔ BR	9 – 14	IG switch ON
		Pulse generation (See page EG-243)	Idling
IGT1 (E8-24) IGT2 (E8-25) IGT3 (E8-26) – E1 (E6-16)	B-L BR-Y ↔ BR B-W	Pulse generation (See page EG-296)	Idling
IGF (E8-12) – E1 (E6-16)	B-Y ↔ BR	4.5 – 5.5	IG switch ON
		Pulse generation (See page EG-296)	Idling
G (E7-10) – G – (E7-11)	Y ↔ L	Pulse generation (See page EG-249)	Idling
NE (E7-5) – NE – (E7-6)	R ↔ G	Pulse generation (See page EG-249)	Idling
FPU (E6-9) – E1 (E6-16)	R-B ↔ BR	9 – 14	IG switch ON
		0 – 3.0	Restarting at high engine coolant temp.

Symbols (Terminals No.)	Wiring Color	STD Voltage (V)	Condition
W (E6-3) – E1 (E6-16)	V ↔ BR	9 – 14	Idling
		0 – 3.0	IG switch ON
EGR (E6-8) – E1 (E6-16)	R-W ↔ BR	9 – 14	IG switch ON
EVP1 (E6-15) – E1 (E6-16)	W-G ↔ BR	9 – 14	IG switch ON
RSC (E8-22) RSO (E8-23) – E1 (E6-16)	B-R BR-R ↔ BR	9 – 14	IG switch ON Disconnect (E8) of ECM connector
ACV (E6-10) – E1 (E6-16)	B-R ↔ BR	0 – 3.0	Idling, A/C switch ON
		9 – 14	Idling, A/C switch OFF
OX1 (E7-13) OX2 (E7-19) – E1 (E6-16)	W B ↔ BR	Pulse generation	Maintain engine speed at 2,500 rpm for 2 mins. after warming up
HT1 (E8-16) HT2 (E8-15) – E03 (E8-1)	R-G R-W ↔ W-B	Below 3.0	Idling
		9 – 14	IG switch ON
KNK1 (E7-17) KNK2 (E7-16) – E1 (E6-16)	B GR ↔ BR	Pulse generation (See page EG-248)	Idling
NSW (E8-14) – E1 (E6-16)	B ↔ BR	9 – 14	IG switch ON Other shift position in "P", "N" position
		0 – 3.0	IG switch ON Shift position in "P", "N" position
SP1 (E5-12) – E1 (E6-16)	G-O ↔ BR	Pulse generation	IG switch ON Rotate driving wheel slowly
TE1 (E6-5) – E1 (E6-16)	V-W ↔ BR	9 – 14	IG switch ON
ACT (E5-5) – E1 (E6-16)	L-B ↔ BR	9 – 14	Idling, A/C switch ON
		Below 2.0	Idling, A/C switch OFF
AC1 (E5-20) – E1 (E6-16)	L-Y ↔ BR	Below 2.0	Idling, A/C switch ON
		9 – 14	Idling, A/C switch OFF
THG (E7-21) – E2 (E7-22)	P-G ↔ BR-B	4.5 – 5.5	IG switch ON
FC (E6-4) – E1 (E6-16)	G-Y ↔ BR	9 – 14	IG switch ON
		0 – 3.0	Idling
SDL (E5-18) – E1 (E6-16)	W ↔ BR	Pulse generation	During transmission
*TPC (E6-13) – E1 (E6-16)	GR-G ↔ BR	9 – 14	IG switch ON
*PTNK (E7-15)– E2 (E7-22)	R-Y ↔ BR-B	2.9 – 3.7	IG switch ON
		Below 0.5	Apply vacuum (less than 66.7 kPa, 500 mm Hg, 19.7 in.Hg)

*: Only for 4WD models

EG

STANDARD VALUE OF ECM TERMINALS (Cont'd)

When measuring the voltage or resistance of the connector part of the ECM, always insert the test probe into the connector from the wire harness side.

ECM Terminals (for M/T)

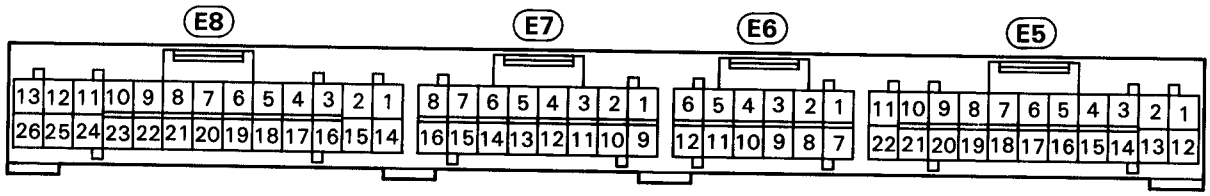

FI6526

Symbols (Terminals No.)	Wiring Color	STD Voltage (V)	Condition
BATT (E5-2) – E1 (E8-24)	B-Y ↔ BR	9 – 14	Always
+B (E5-12) – E1 (E8-24)	W-R ↔ BR	9 – 14	IG switch ON
VCC (E7-1) – E2 (E7-9)	G-B ↔ BR-B	4.5 – 5.5	IG switch ON
IDL (E7-11) – E2 (E7-9)	Y-L ↔ BR-B	0 – 3.0	IG switch ON and apply vacuum to the throttle opener. Throttle valve fully closed.
		9 – 14	IG switch ON Throttle valve fully open
VTA (E7-10) – E2 (E7-9)	Y ↔ BR-B	0.3 – 0.8	IG switch ON Throttle valve fully closed
		3.2 – 4.9	IG switch ON Throttle valve fully open
VG (E7-2) – E3 (E7-8)	GR-R ↔ BR-W	1.1 – 1.5	Idling, N position, A/C switch OFF
THA (E7-12) – E2 (E7-9)	Y-G ↔ BR-B	0.5 – 3.4	Idling, Intake air temp. 20°C (68°F)
THW (E7-4) – E2 (E7-9)	G-R ↔ BR-B	0.2 – 1.0	Idling, Engine coolant temp. 80°C (176°F)
STA (E5-11) – E1 (E8-24)	B-W ↔ BR	6.0 or more	Cranking
#10 (E8-12) #20 (E8-11) #30 (E8-25) #40 (E8-10) #50 (E8-9) #60 (E8-8) – E01 (E8-13)	W-R W W-G Y-R W-L Y-B ↔ BR	9 – 14	IG switch ON
		Pulse generation (See page EG-243)	Idling
IGT1 (E8-23) IGT2 (E8-22) IGT3 (E8-21) – E1 (E8-24)	B-L BR-Y ↔ BR B-W	Pulse generation (See page EG-296)	Idling
IGF (E8-17) – E1 (E8-24)	B-Y ↔ BR	4.5 – 5.5	IG switch ON Disconnect igniter connector
		Pulse generation (See page EG-296)	Idling
G (E6-11) – G – (E6-5)	Y ↔ L	Pulse generation (See page EG-249)	Idling
NE (E6-12) – NE – (E6-6)	R ↔ G	Pulse generation (See page EG-249)	Idling
FPU (E8-19) – E1 (E8-24)	R-B ↔ BR	9 – 14	IG switch ON
		0 – 3.0	Restarting at high engine coolant temp.

Symbols (Terminals No.)	Wiring Color	STD Voltage (V)	Condition
W (E5-4) – E1 (E8-24)	V ↔ BR	9 – 14	Idling
		0 – 3.0	IG switch ON
EGR (E8-18) – E1 (E8-24)	R-W ↔ BR	9 – 14	IG switch ON
EVP1 (E8-5) – E1 (E8-24)	W-G ↔ BR	9 – 14	IG switch ON
RSC (E8-6) RSO (E8-7) – E1 (E8-24)	B-R BR-R ↔ BR	9 – 14	IG switch ON Disconnect (E8) of ECM connector
ACV (E8-2) – E1 (E8-24)	B-R ↔ BR	0 – 3.0	Idling, A/C switch ON
		9 – 14	Idling, A/C switch OFF
OX1 (E7-5) OX2 (E7-13) – E1 (E8-24)	W B ↔ BR	Pulse generation	Maintain engine speed at 2,500 rpm for 2 mins. after warming up
HT1 (E6-3) HT2 (E6-9) – E03 (E6-7)	R-G R-W ↔ BR	Below 3.0	Idling
		9 – 14	IG switch ON
KNK1 (E7-6) KNK2 (E7-3) – E1 (E8-24)	B GR ↔ BR	Pulse generation (See page EG-248)	Idling
SP1 (E5-8) – E1 (E8-24)	G-O ↔ BR	Pulse generation	IG switch ON Rotate driving wheel slowly
TE1 (E7-7) – E1 (E8-24)	V-W ↔ BR	9 – 14	IG switch ON
ACT (E5-6) – E1 (E8-24)	L-B ↔ BR	9 – 14	Idling, A/C switch ON
		Below 2.0	Idling, A/C switch OFF
AC1 (E5-7) – E1 (E8-24)	L-Y ↔ BR	Below 2.0	Idling, A/C switch ON
		9 – 14	Idling, A/C switch OFF
THG (E7-14) – E2 (E7-9)	P-G ↔ BR-B	4.5 – 5.5	IG switch ON
FC (E8-14) – E1 (E8-24)	G-Y ↔ BR	9 – 14	IG switch ON
		0 – 3.0	Idling
SDL (E5-19) – E1 (E8-24)	W ↔ BR	Pulse generation	During transmission
*TPC (E8-3) – E1 (E8-24)	GR-G ↔ BR	9 – 14	IG switch ON
*PTNK (E6-4) – E2 (E7-9)	R-Y ↔ BR-B	2.9 – 3.7	IG switch ON
		Below 0.5	Apply vacuum (less than 66.7 kPa, 500 mm Hg, 19.7 in.Hg)

*: Only for 4WD models

EG

ENGINE OPERATING CONDITION

NOTICE: The values given below for "Normal Condition" are representative values, so a vehicle may still be normal even if its value varies from those listed here. So do not decide whether a part is faulty or not solely according to the "Normal Condition" here.

CARB Mandated Signals

TOYOTA hand-held tester display	Measurement Item	Normal Condition*
FUEL SYS #1	Fuel System Bank 1 OPEN: Air-fuel ratio feedback stopped CLOSED: Air-fuel ratio feedback operating	Idling after warming up: CLOSED
CALC LOAD	Calculator Load: Current intake air volume as a proportion of max. intake air volume	Idling: 14.9 ~ 21.3% Racing without load (2,500 rpm): 16.5 ~ 23.5%
COOLANT TEMP.	Engine Coolant Temp. Sensor Value	After warming up: 80 ~ 95°C (176 ~ 203°F)
SHORT FT #1	Short-term Fuel Trim Bank 1	0 ± 20%
LONG FT #1	Long-term Fuel Trim Bank 1	0 ± 20%
ENGINE SPD	Engine Speed	Idling: 700 ± 50 rpm
VEHICLE SPD	Vehicle Speed	Vehicle stopped: 0 km/h (0 mph)
IGN ADVANCE	Ignition Advance Ignition Timing of Cylinder No.1	Idling: BTDC 12.5 ~ 22°
INTAKE AIR	Intake Air Temp. Sensor Value	Equivalent to ambient temp.
MAF	Air Flow Rate Through Mass Air Flow Meter	Idling: 3.2 ~ 4.6 gm/sec. Racing without load (2,500 rpm): 12.9 ~ 18.3 gm/sec.
THROTTLE POS	Voltage Output of Throttle Position Sensor Calculated as a percentage 0 V → 0%, 5 V → 100%	Throttle Fully closed: 7 ~ 11% Fully open: 65 ~ 75%
O2S B1, S1	Voltage Output of Oxygen Sensor Bank 1, Sensor 1	Idling: 0.1 ~ 0.9 V
O2FT B1, S1	Oxygen Sensor Fuel Trim Bank 1, Sensor 1 (Same as SHORT FT #1)	0 ± 20%
O2S B1, S2	Voltage Output of Oxygen Sensor Bank 1, Sensor 2	Driving 50 km/h (31 mph): 0.1 ~ 0.9 V

*: If no conditions are specifically stated for "Idling", it means the shift lever is at N or P position, the A/C switch is OFF and all accessory switches are OFF.

TOYOTA Enhanced Signals

TOYOTA hand-held tester display	Measurement Item	Normal Condition*
MISFIRE RPM	Engine RPM for first misfire range	Misfire 0: 0 RPM
MISFIRE LOAD	Engine load for first misfire range	Misfire 0: 0 g/r
INJECTOR	Fuel injection time for cylinder No.1	Idling: 1.82 ~ 3.15 ms
IAC DUTY RATIO	Intake Air Control Valve Duty Ratio Opening ratio rotary solenoid type IAC valve	Idling: 22 ~ 46%
STARTER SIG	Starter Signal	Cranking: ON
CTP SW	Closed Throttle Position Switch Signal	Throttle fully closed: ON
A/C SIG	A/C Switch Signal	A/C ON: ON
PNP SW	Park/Neutral Position Switch Signal	P or N position: ON
STOP LIGHT SW	Stop Light Switch Signal	Stop light switch ON: ON
FC IDL	Fuel Cut Idle: Fuel cut when throttle valve fully closed, during deceleration	Fuel cut operating: ON
FC TAU	Fuel Cut TAU: Fuel cut during very light load	Fuel cut operating: ON
CYL #1 〉 CYL #6	Ratio of revolution variation for each cylinder when variation is large	0%
IGNITION	Ignition rate for all cylinders every 1,000 revolutions	0 ~ 3,000

*: If no conditions are specifically stated for "Idling", it means the shift lever is at N or P position, the A/C switch is OFF and all accessory switches are OFF.

TOYOTA Enhanced Signals (Cont'd)

TOYOTA hand-held tester display	Measurement Item	Normal Condition*
EGRT GAS	EGR Gas Temp. Sensor Value	EGR not operating: Temperature between intake air temp. and engine coolant temp.
EGR SYSTEM	EGR System Operating Condition	Idling: OFF
FUEL PRES UP VSV	Fuel Pressure Up VSV Signal	High temp. restarting: ON
A/C CUT SIG	A/C Cut Signal	A/C S/W OFF: ON
FUEL PUMP	Fuel Pump Signal	Idling: ON
A/C IDLE UP VSV	A/C Idle-Up Signal	A/C S/W ON & D position & headlight ON: ON
EVAP (PURGE) VSV	EVAP VSV Signal	VSV operating: ON
TOTAL FT B1	Total Fuel Trim Bank 1: Average value for fuel trim system of bank 1	Idling: 0.8 ~ 1.2
O2 LR B1, S1	Oxygen Sensor Lean Rich Bank 1, Sensor 1 Response time for oxygen sensor output to switch from lean to rich	Idling after warmed up: 0 ~ 1,000 msec.
O2 RL B1, S1	Oxygen Sensor Rich Lean Bank 1, Sensor 1 Response time for oxygen sensor output to switch from rich to lean	Idling after warmed up: 0 ~ 1,000 msec.

*: If no conditions are specifically stated for "Idling", it means the shift lever is at N or P position, the A/C switch is OFF and all accessory switches are OFF.

MATRIX CHART OF PROBLEM SYMPTOMS

When the malfunction code is not confirmed in the DTC check and the problem still can not be confirmed in the basic inspection, then proceed to this step and perform troubleshooting according to the numbered order given in the table below.

Symptom	Suspect area	Starter signal circuit	ECM power source circuit	Fuel pump control circuit	Fuel pressure control circuit	A/C idle-up circuit	Starter and starter relay	Compression	A/T faulty	Engine control module (ECM)
	See page	EG-299	EG-304	EG-309	EG-314	EG-306	ST-26, 27	EG-7	AT-55	IN-29
Does not start	Engine does not crank						1			
	No initial combustion		1	2						
	No complete combustion			1						
Difficult to start	Engine cranks normally	1		2				3		
	Cold engine	1		2						
	Hot engine	1		3	2					
Poor idling	High engine idle speed		2			1				
	Low engine idle speed			2		1				
	Rough idling			2				1		
	Hunting		1	2						
Poor drive-ability	Hesitation/Poor acceleration			1					2	
	Surging			1						
Engine stall	Soon after starting			1						
	During A/C operation					1				2

EG

CIRCUIT INSPECTION

DTC P0100 Mass Air Flow Circuit Malfunction

CIRCUIT DESCRIPTION

The mass air flow meter uses a platinum hot wire. The hot wire air flow meter consists of a platinum hot wire, thermistor and a control circuit installed in a plastic housing. The hot wire air flow meter works on the principle that the hot wire and thermistor located in the intake air bypass of the housing detect any changes in the intake air temperature.

The hot wire is maintained at the set temperature by controlling the current flow through the hot wire. This current flow is then measured as the output voltage of the air flow meter.

EG

The circuit is constructed so that the platinum hot wire and thermistor provide a bridge circuit, with the power transistor controlled so that the potential of Ⓐ and Ⓑ remains equal to maintain the set temperature.

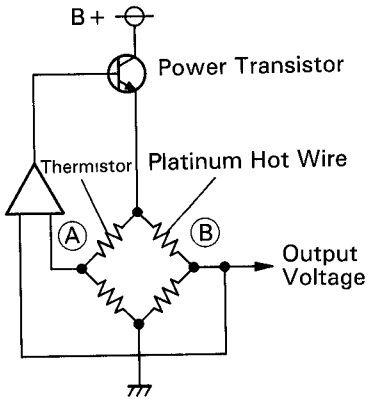

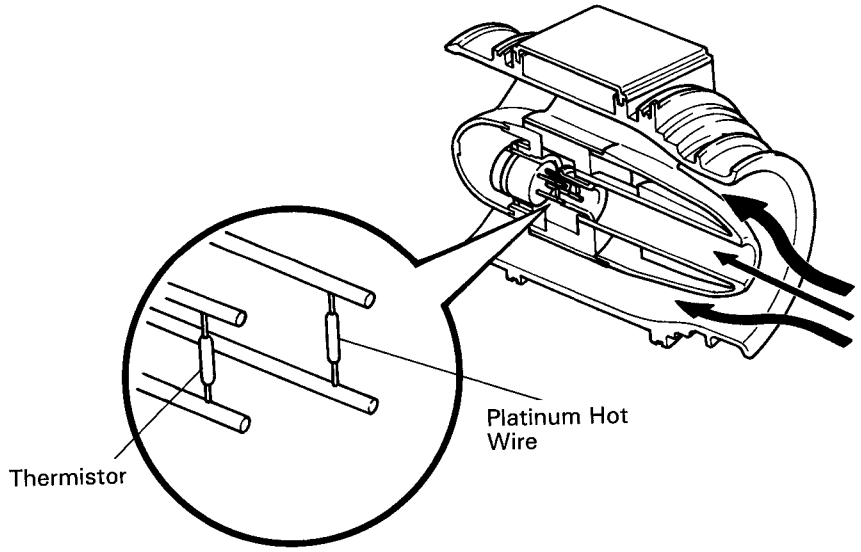

FI6929 FI6972

DTC No.	DTC Detecting Condition	Trouble Area
P0100	Open or short in mass air flow meter circuit with engine speed 4,000 rpm or less	• Open or short in mass air flow meter circuit • Mass air flow meter • ECM

If the ECM detects DTC "P0100" it operates the fail safe function, keeping the ignition timing and injection volume constant and making it possible to drive the vehicle.

HINT: After confirming DTC P0100 use the OBD II scan tool or TOYOTA hand-held tester to confirm the mass air flow ratio from "CURRENT DATA".

Mass Air Flow Value (gm/sec.)	Malfunction
Approx.0	• Mass air flow meter power source open • VG circuit open or short
11.0 ~ 25.1 (idling after warmed up)	• E3 circuit open

WIRING DIAGRAM

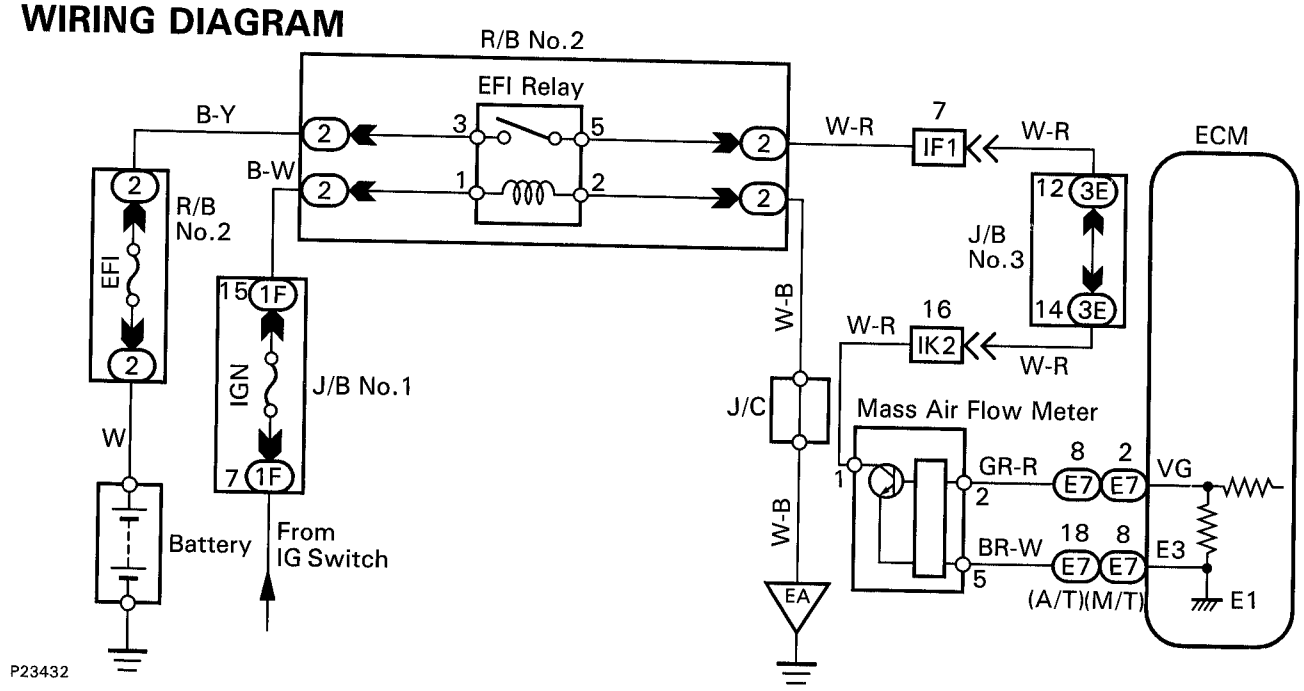

INSPECTION PROCEDURE

1 **Connect the OBD II scan tool to TOYOTA hand-held tester, and read value of mass air flow rate.**

P (1) Connect the OBD II scan tool or TOYOTA hand-held tester to the DLC3.
(2) Turn ignition switch ON and switch the OBD II scan tool or TOYOTA hand-held tester main switch ON.
(3)Start the engine.

C Read mass air flow rate on the OBD II scan tool or TOYOTA hand-held tester.

Result

	Type I	Type II
Mass air flow rate(gm/sec.)	Approx. 0	11.0 ~ 25.1 (idling after warmed up)

Type I

Type II → **Go to step 5 .**

2 **Check voltage of mass air flow meter power source.**

ON

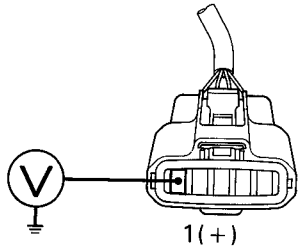

BE6653
P24310

P (1) Disconnect the mass air flow meter connector.
(2) Turn ignition switch ON.

C Measure voltage between terminal 1 of mass air flow meter connector and body ground.

OK **Voltage: 9 – 14 V**

OK

NG → **Check for open in harness and conncetor between EFI relay and mass air flow meter (See page IN-24).**

3 Check voltage between terminal VG of ECM and body ground.

For A/T

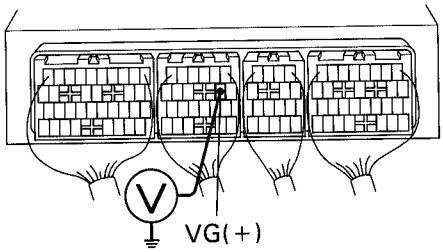

For M/T

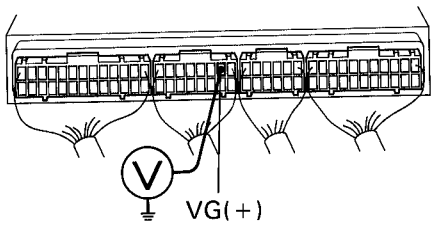

P24311
P23805

P (1) Remove glove compartment (See page EG-161).
(2) Start the engine.

C Measure voltage between terminal VG of ECM and body ground while engine is idling.

OK **Voltage: 1.1 – 1.5 V (P or V position and A/C switch OFF)**

NG

OK → **Check and replace ECM (See page IN-29).**

4 Check for open and short in harness and connector between mass air flow meter and ECM (See page IN-24).

OK

NG → **Repair or replace harness or connector.**

Replace mass air flow meter.

5 Check continuity between terminal E3 of ECM and body ground.

For A/T

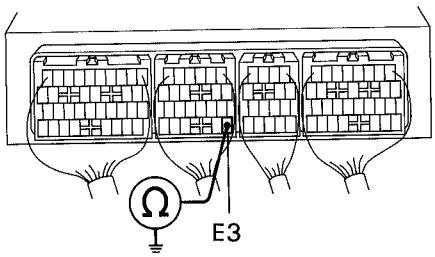

For M/T

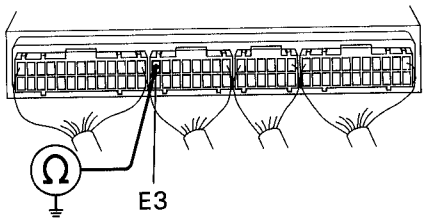

P24312
P24313

P Remove glove compartment (See page EG-161).

C Check continuity between terminal E3 of ECM and body ground.

OK **Continuity (1Ω or less)**

OK

NG → **Check and replace ECM (See page IN-29).**

6	Check for open in harness and connector between mass air flow meter and ECM (See page IN-24).

OK

NG → Repair or replace harness or connector.

Replace mass air flow meter.

DTC P0101 Mass Air Flow Circuit Range/ Performance Problem

CIRCUIT DESCRIPTION

Refer to Mass Air Flow Circuit Malfunction on page EG-218.

DTC No.	DTC Detecting Condition	Trouble Area
P0101	Conditions (a) and (b) continue with engine speed 900 rpm or less: (2 trip detection logic) (a) Closed throttle position switch: ON (b) Mass air flow meter output > 2.2 V	• Mass air flow meter

WIRING DIAGRAM

Refer to Mass Air Flow Circuit Malfunction on page EG-219.

INSPECTION PROCEDURE

1	Are there any other codes (besides DTC P0101) being output?

NO

YES → Go to relevant DTC chart.

Replace mass air flow meter.

DTC P0110 Intake Air Temp. Circuit Malfunction

CIRCUIT DESCRIPTION

The intake air temp. sensor is built into the air flow meter and senses the intake air temperature.
A thermistor built in the sensor changes the resistance value according to the intake air temperature.
The lower the intake air temperature, the greater the thermistor resistance value, and the higher the intake air temperature, the lower the thermistor resistance value (See Fig.1.).
The intake air temperature sensor is connected to the ECM (See below). The 5 V power source voltage in the ECM is applied to the intake air temperature sensor from the terminal THA via a resistor R.
That is, the resistor R and the intake air temperature sensor are connected in series. When the resistance value of the intake air temperature sensor changes in accordance with changes in the intake air temperature, the potential at terminal THA also changes. Based on this signal, the ECM increases the fuel injection volume to improve driveability during cold engine operation.
If the ECM detects the DTC "P0110", it operates the fail safe function in which the intake temperature is assumed to be 20°C (68°F).

(fig 1)

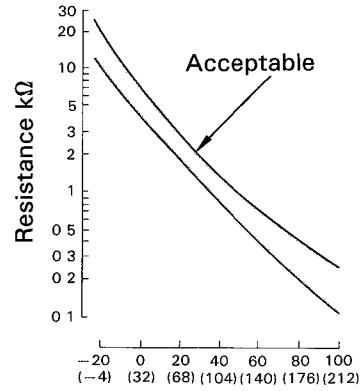

FI4741

Intake Air Temp. °C (°F)	Resistance (kΩ)	Voltage (V)
−20 (−4)	16.2	4.3
0 (32)	5.9	3.4
20 (68)	2.5	2.4
40 (104)	1.1	1.4
60 (140)	0.6	0.9
80 (176)	0.3	0.5
100 (212)	0.1	0.2

DTC No.	DTC Detecting Condition	Trouble Area
P0110	Open or short in intake air temp. sensor circuit	• Open or short in intake air temp. sensor circuit • Intake air temp. sensor • ECM

HINT: After confirming DTC P0110 use the OBD II scan tool or TOYOTA hand-held tester to confirm the intake air temperature from "CURRENT DATA".

Temperature Displayed	Malfunction
−40°C (−40°F)	Open circuit
140°C (284°F) or more	Short circuit

WIRING DIAGRAM

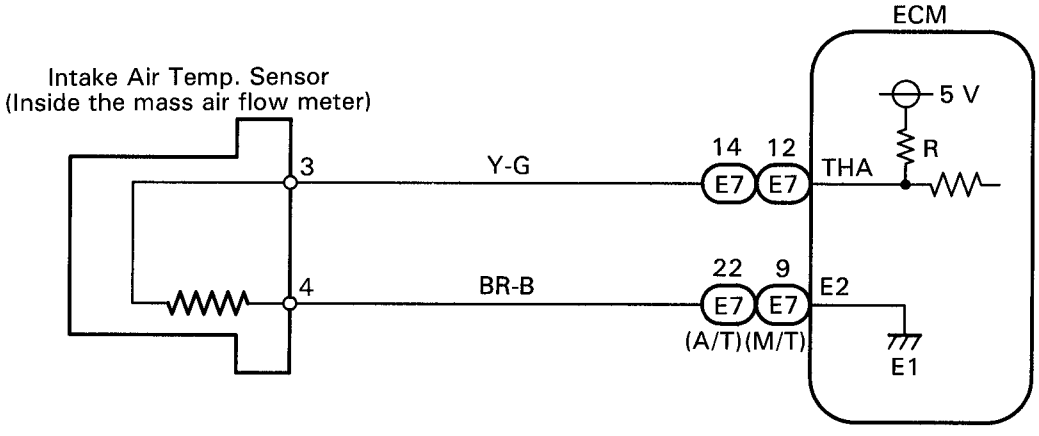

P19948

INSPECTION PROCEDURE

HINT: If DTC "P0110" (intake air temp. circuit malfunction), "P0115" (engine coolant temp. circuit malfunction), "P0120" (throttle/pedal position sensor/switch "A" circuit malfunction) are output simultaneously, E2 (sensor ground) may be open.

1 Connect the OBD II scan tool or TOYOTA hand-held tester, and read value of intake air temperature.

P (1) Connect the OBD II scan tool or TOYOTA hand-held tester to the DLC3.
(2) Turn ignition switch ON and switch the OBD II scan tool or TOYOTA hand-held tester main switch ON.

C Read temperature value on the OBD II scan tool or TOYOTA hand-held tester.

OK **Same as actual intake air temperature.**

HINT: If there is open circuit, OBD II scan tool or TOYOTA hand-held tester indicates −40°C (−40°F).
If there is short circuit, OBD II scan tool or TOYOTA hand-held tester indicates 140°C (284°F) or more.

OK

NG → **−40°C (−40°F)···Go to step 2 .**
140°C (284°F) or more···Go to step 4 .

Check for intermittent problems (See page EG-205).

2 Check for open in harness or ECM.

ON

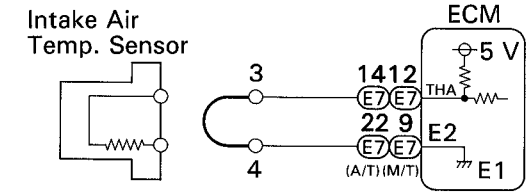

BE6653
P19555

P (1) Disconnect the mass air flow meter connector.
(2) Connect sensor wire harness terminals together.
(3) Turn ignition switch ON.

C Read temperature value on the OBD II scan tool or TOYOTA hand-held tester.

OK **Temperature value: 140°C (284°F) or more.**

NG

OK → **Confirm good connection at sensor. If OK, replace mass air flow meter.**

3 Check for open in harness or ECM.

ON

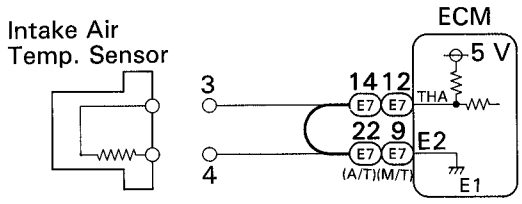

P (1) Remove glove compartment (See page EG-161).
(2) Connect between terminals THA and E2 of ECM conncetor.

HINT: Mass air flow meter connector is disconnected. Before checking, do a visual and contact pressure check for the ECM connector (See page EG-206).

(3) Turn ignition switch ON.

C Read temperature value on the OBD II scan tool or TOYOTA hand-held tester.

OK **Temperature value: 140°C (284°F) or more**

For A/T

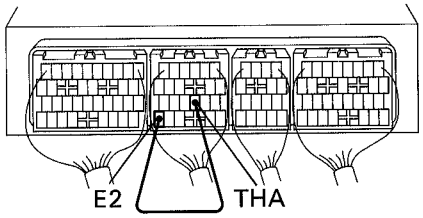

For M/T

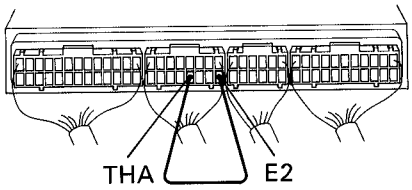

BE6653
P19553
P20199
P20223

NG

OK **Open harness between terminals E2 or THA, repair or replace harness.**

Confirm good connection at ECM. If OK, replace ECM.

4 Check for short in harness and ECM.

ON

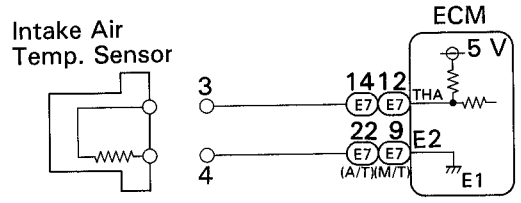

P (1) Disconnect the mass air flow meter connector.
(2) Turn ignition switch ON.

C Read temperature value on the OBD II scan tool or TOYOTA hand-held tester.

OK **Temperature value: −40°C (−40°F).**

BE6653
P19554

NG

OK **Replace mass air flow meter.**

5 **Check for short in harness or ECM.**

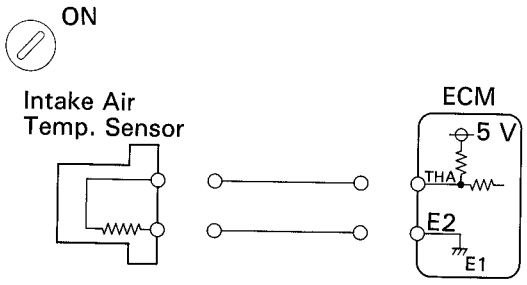

P (1) Remove glove compartment (See page EG-161).
(2) Disconnect the (E7) connector of ECM.
HINT: Mass air flow meter connector is disconnected.
(3) Turn ignition switch ON.

C Read temperature value on the OBD II scan tool or TOYOTA hand-held tester.

OK **Temperature value: −40°C (−40°F).**

For A/T

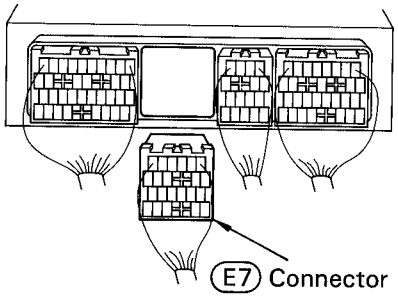

For M/T

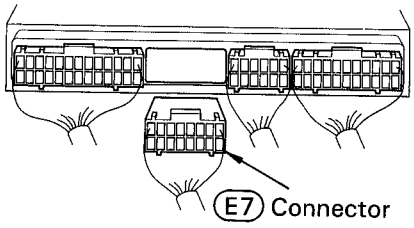

BE6653
FI7056
FI7034
P17747

NG → **Check and replace ECM (See page IN-29).**

OK → **Repair or replace harness or conncetor.**

DTC P0115 Engine Coolant Temp. Circuit Malfunction

CIRCUIT DESCRIPTION

A thermistor built into the engine coolant temperature sensor changes the resistance value according to the engine coolant temperature.
The structure of the sensor and connection to the ECM is the same as in the intake air temp. circuit malfunction shown on page EG-222.
If the ECM detects the DTC P0115, it operates the fail safe function in which the engine coolant temp. is assumed to be 80°C (176°F).

DTC No.	DTC Detecting Condition	Trouble Area
P0115	Open or short in engine coolant temp. sensor circuit	• Open or short in engine coolant temp. sensor circuit • Engine coolant temp. sensor • ECM

HINT: After confirming DTC P0115 use the OBD II scan tool or TOYOTA hand-held tester to confirm the engine coolant temperature from "CURRENT DATA".

Temperature Displayed	Malfunction
−40°C (−40°F)	Open circuit
140°C (284°F) or more	Short circuit

WIRING DIAGRAM

EG

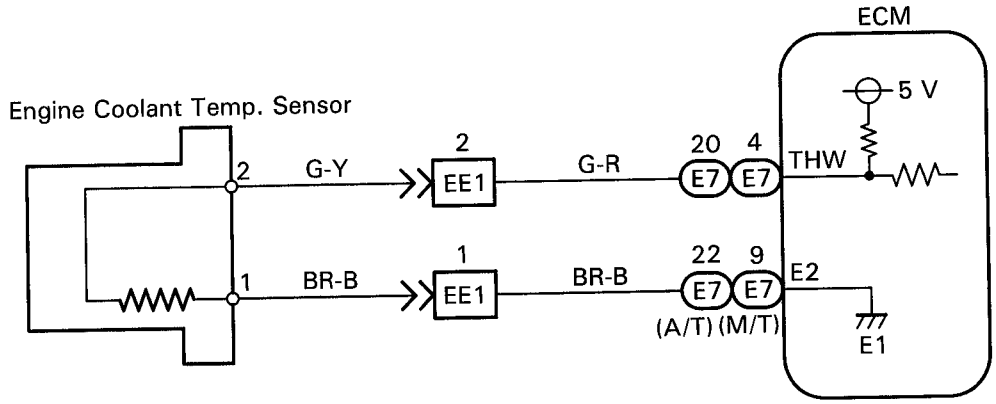

P19947

INSPECTION PROCEDURE

HINT: If DTC "P0110" (intake air temp. circuit malfunction). "P0115" (engine coolant temp. circuit malfunction), "P0120" (throttle/pedal position sensor/switch "A" circuit malfunction) are output simultaneously, E2 (sensor ground) may be open.

1 Connect the OBD II scan tool or TOYOTA hand-held tester, and read value of engine coolant temperature.

P (1) Connect the OBD II scan tool or TOYOTA hand-held tester to the DLC3.
(2) Turn ignition switch ON and switch the OBD II scan tool or TOYOTA hand-held tester main switch ON.

C Read temperature value on the OBD II scan tool or TOYOTA hand-held tester.

OK **Same as actual engine coolant temperature.**

HINT: If there is open circuit, OBD II scan tool or TOYOTA hand-held tester indicates −40°C (−40°F). If there is short circuit, OBD II scan tool or TOYOTA hand-held tester indicates 140°C (284°F) or more.

OK

NG **−40°C (−40°F)···Go to step 2 .**
140°C (284°F) or more···Go to step 4 .

Check for intermittent problems (See page EG-205).

2 Check for open in harness or ECM.

ON

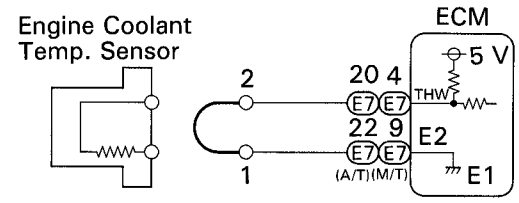

BE6653
P19555

P (1) Disconnect the engine coolant temp. sensor connector.
(2) Connect sensor wire harness terminals together.
(3) Turn ignition switch ON.

C Read temperature value on the OBD II scan tool or TOYOTA hand-held tester.

OK **Temperature value: 140°C (284°F) or more**

NG

OK → **Confirm good connection at sensor. If OK, replace engine coolant temp. sensor.**

3 Check for open in harness or ECM.

ON

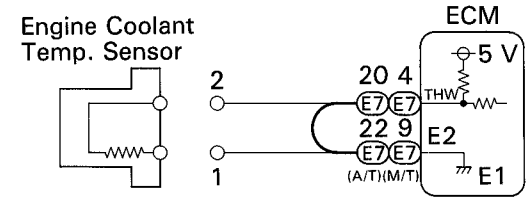

P (1) Remove glove compartment (See page EG-161).
(2) Connect between terminals THW and E2 of ECM conncetor.
HINT: Engine coolant temp. sensor connector is disconnected. Before checking, do a visual and contact pressure check for the ECM connector (See page EG-206).
(3) Turn ignition switch ON.

For A/T

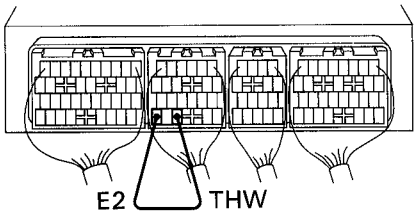

C Read temperature value on the OBD II scan tool or TOYOTA hand-held tester.

OK **Temperature value: 140°C (284°F) or more**

For M/T

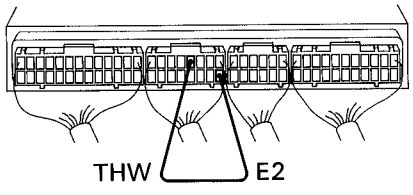

BE6653
P19553
P20200
P20224

NG

OK → **Open in harness between terminals E2 or THW, repair or replace harness.**

Confirm good connection at ECM. If OK, replace ECM.

4 Check for short in harness and ECM.

ON

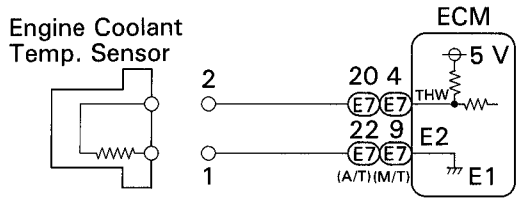

BE6653
P19554

P (1) Disconnect the engine coolant temp. sensor connector.
(2) Turn ignition switch ON.

C Read temperature value on the OBD II scan tool or TOYOTA hand-held tester.

OK **Temperature value: −40°C (−40°F)**

NG

OK → **Replace engine coolant temp. sensor.**

5 Check for short in harness or ECM.

ON

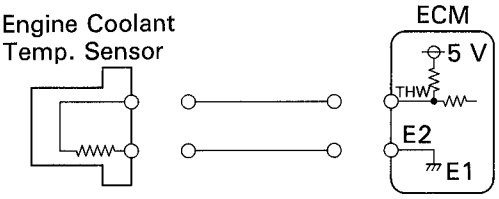

P (1) Remove glove compartment (See page EG-161).
(2) Disconnect the (E7) connector of ECM.
HINT: Engine coolant temp. sensor connector is disconnected.
(3) Turn ignition swith ON.

C Read temperature value on the OBD II scan tool or TOYOTA hand-held tester.

OK **Temperature value: −40°C (−40°F)**

For A/T

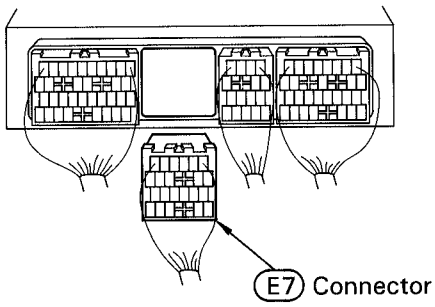

For M/T

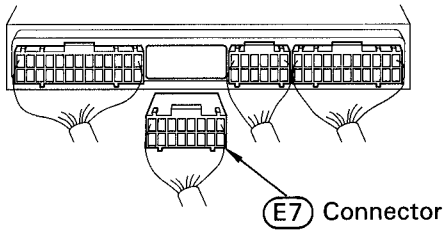

BE6653
FI7056
FI7034
P17747

NG

OK → **Repair or replace harness or connector.**

Check and replace ECM (See page IN-29).

DTC P0116 Engine Coolant Temp. Circuit Range/ Performance Problem

CIRCUIT DESCRIPTION

Refer to Engine Coolant Temp. Circuit Malfunction on page EG-225.

DTC No.	DTC Detecting Condition	Trouble Area
P0116	20 min. or more after starting engine, engine coolant temp. sensor value is 35°C (95°F) or less (2 trip detection logic)	• Engine coolant temp. sensor • Cooling system

INSPECTION PROCEDURE

HINT: If DTC "P0115" (engine coolant temp. circuit malfunction) and "P0116" (engine coolant temp. circuit range/performance problem) are output simultaneously, engine coolant temp. sensor circuit may be open.
Troubleshoot of DTC P0115 first.

1 **Are there any other codes (besides DTC P0116) being output?**

NO → **Replace engine coolant temp. sensor (See page EG-153).**

YES → **Go to relevant DTC chart.**

DTC P0120 Throttle/Pedal Position Sensor/Switch "A" Circuit Malfunction

CIRCUIT DESCRIPTION

The throttle position sensor is mounted in the throttle body and detects the throttle valve opening angle. When the throttle valve is fully closed, the IDL contacts in the throttle position sensor are on, so the voltage at the terminal IDL of the ECM becomes 0 V. At this time, a voltage of approximately 0.7 V is applied to terminal VTA of the ECM. When the throttle valve is opened, the IDL contacts go off and thus the power source voltage of approximately 12 V in the ECM is applied to the terminal IDL of the ECM. The voltage applied to the terminal VTA of the ECM increases in proportion to the opening angle of the throttle valve and becomes approximately 2.7 – 5.2 V when the throttle valve is fully opened. The ECM judges the vehicle driving conditions from these signals input from terminals VTA and IDL, and uses them as one of the conditions for deciding the air-fuel ratio correction, power increase correction and fuel-cut control etc.

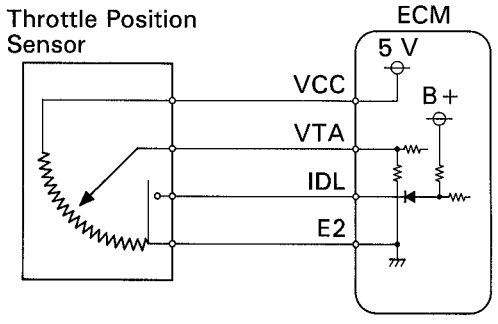

FI6571

DTC No.	DTC Detecting Condition	Trouble Area
P0120	Condition (a) or (b) continues: (a) VTA < 0.1 V, and closed throttle position switch is OFF (b) VTA > 4.9 V	• Open or short in throttle position sensor circuit • Throttle position sensor • ECM

HINT:
- If there is open circuit in IDL line, DTC P0120 does not indicate.
- After confirming DTC P0120 use the OBD II scan tool or TOYOTA hand-held tester to confirm the throttle valve opening percentage and closed throttle position switch condition.

Throttle valve opening position expressed as percentage		Trouble Area
Throttle valve fully closed	Throttle valve fully open	
0%	0%	VCC line open VTA line open or short
Approx. 99%	Approx. 100%	E2 line open

EG

WIRING DIAGRAM

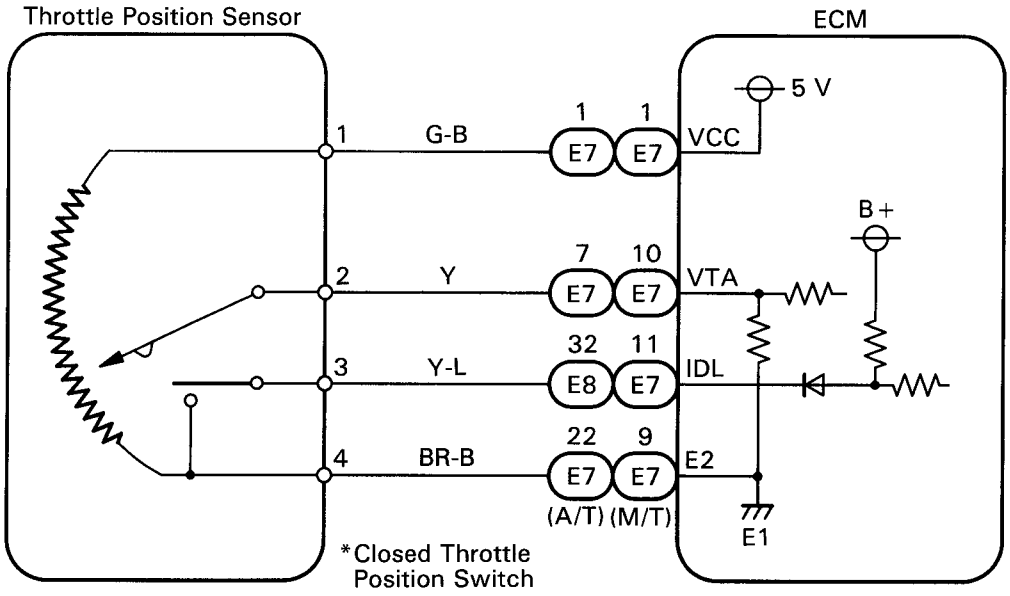

P19954

INSPECTION PROCEDURE

HINT: If DTC P0110, P0115, and P0120 are output simultaneously, E2 (sensor ground) may be open.

1 Connect the OBD II scan tool or TOYOTA hand-held tester and read the throttle valve opening percentage.

P (1) Connect the OBD II scan tool or TOYOTA hand-held tester to the DLC3.
(2) Turn ignition switch ON and switch the OBD II scan tool or TOYOTA hand-held tester main switch ON.

C Read the throttle valve opening percentage.

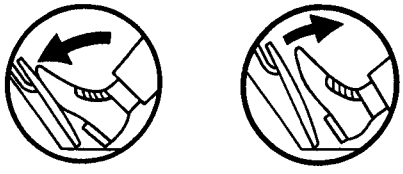

FI7052

OK

Throttle valve	Throttle valve opening position expressed as percentage
Fully open	Approx. 75%
Fully closed	Approx. 10%

NG

OK → **Check for intermittent problems (See page EG-205).**

2 Check voltage between terminal 1 of wire harness side connector and body ground.

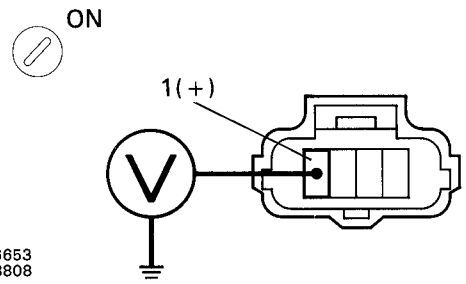

P (1) Disconnect the throttle position sensor connector.
(2) Turn ignition switch ON.

C Measure voltage between terminal 1 of wire harness side connector and body ground.

OK **Voltage: 4.5 – 5.5 V**

OK → **NG** → **Go to step 5 .**

3 Check throttle position sensor.

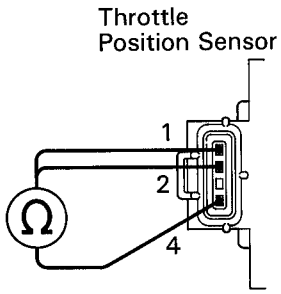

P Disconnect the throttle positon sensor connector.

C Measure resistance between terminals 1, 2 and 4 of throttle position sensor.

OK

Terminals	Throttle valve	Resistance
1 – 4	——	2.5 – 5.9 kΩ
2 – 4	Fully closed	0.2 – 5.7 kΩ
	Fully open	2.0 – 10.2 kΩ

OK → **NG** → **Replace throttle position sensor.**

4 Check voltage between terminals VTA and E2 of ECM.

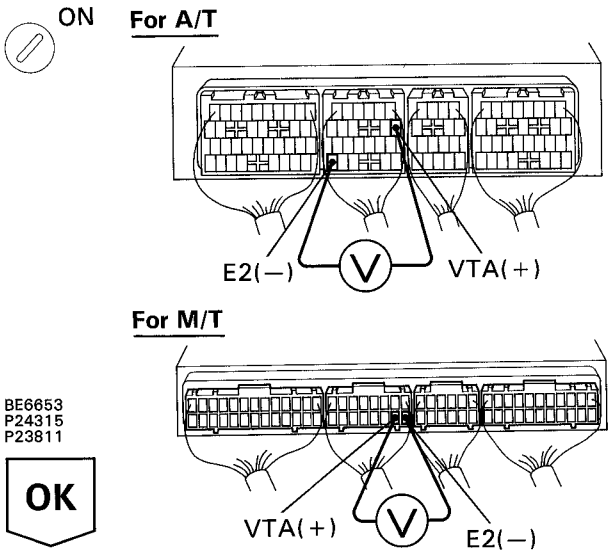

P (1) Remove glove compartment (See page EG-161).
(2) Turn ignition switch ON.

C Measure voltage between terminals VTA and E2 of ECM.

OK

Throttle valve	Voltage
Fully closed	0.3 – 0.8 V
Fully open	2.7 – 5.2 V

OK → **NG** → **Check for open and short in harness and connector between ECM and throttle position sensor (VTA line) (See page IN-24).**

Check and replace ECM (See page IN-29).

5 Check voltage between terminals VCC and E2 of ECM.

ON

For A/T

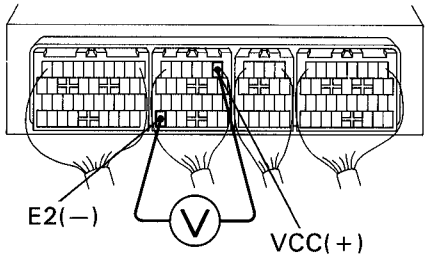

For M/T

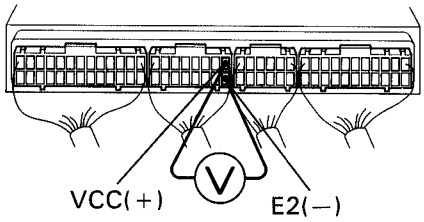

BE6653
P24316
P23813

P (1) Remove glove compartment (See page EG-161).

C Measure voltage between terminals VCC and E2 of ECM connector.

OK **Voltage: 4.5 − 5.5 V**

OK → **NG** → **Check and replace ECM (See page IN-29).**

Check for open in harness and connector between ECM and sensor (VCC line) (See page IN-24).

DTC P0121 Throttle/Pedal Position Sensor/Switch "A" Circuit Range/Performance Problem

CIRCUIT DESCRIPTION

Refer to Throttle/Pedal Position Sensor/Switch "A" Circuit Malfunction on page EG-229.

DTC No.	DTC Detecting Condition	Trouble Area
P0121	While the vehicle speed drops from 30 km/h (19 mph) or more to 0 km/h (0 mph), the output value of the throttle position sensor is out of the applicable range (2 trip detection logic)	• Throttle position sensor

INSPECTION PROCEDURE

1 Are there any other codes (besides DTC P0121) being output?

NO → **YES** → **Go to relevant DTC chart.**

Replace throttle position sensor.

DTC P0125 Insufficient Coolant Temp. for Closed Loop Fuel Control

CIRCUIT DESCRIPTION

To obtain a high purification rate for the CO, HC and NO_X components of the exhaust gas, a three-way catalytic converter is used, but for the most efficient use of the three-way catalytic converter, the air-fuel ratio must be precisely controlled so that it is always close to the stoichiometric air-fuel ratio.

The oxygen sensor has the characteristic whereby its output voltage changes suddenly in the vicinity of the stoichiometric air-fuel ratio. This characteristic is used to detect the oxygen concentration in the exhaust gas and provide feedback to the computer for control of the air-fuel ratio.

When the air-fuel ratio becomes LEAN, the oxygen concentration in the exhaust increases and the oxygen sensor informs the ECM of the LEAN condition (small electromotive force: 0 V).

When the air-fuel ratio is RICHER than the stoichiometric air-fuel ratio the oxygen concentration in the exhaust gas is reduced and the oxygen sensor informs the ECM of the RICH condition (large electromotive force: 1 V).

The ECM judges by the electromotive force from the oxygen sensor whether the air-fuel ratio is RICH or LEAN and controls the injection time accordingly. However, if malfunction of the oxygen sensor causes output of abnormal electromotive force, the ECM is unable to perfrom accurate air-fuel ratio control.

The heated oxygen sensors include a heater which heats the Zirconia element. The heater is controlled by the ECM. When the intake air volume is low (the temperature of the exhaust gas is low) current flows to the heater to heat the sensor for accurate oxygen concentration detection.

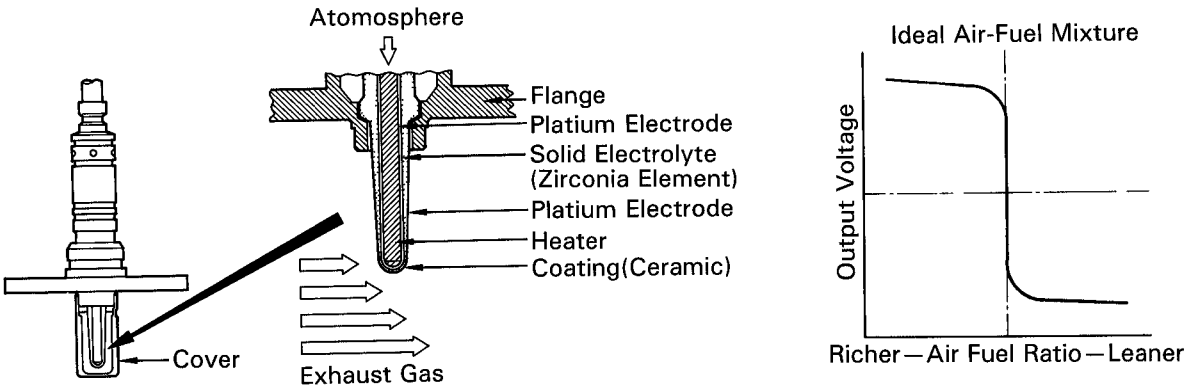

P21242
FI7210

DTC No.	DTC Detecting Condition	Trouble Area
P0125	After the engine is warmed up, heated oxygen sensor output does not indicate RICH even once when conditions (a), (b), (c) and (d) continue for at least 1.5 minutes (a) Engine speed: 1,500 rpm or more (b) Vehicle speed: 40 km/h (25 mph) or more (c) Closed throttle position switch: OFF (d) 140 sec. or more after starting engine	• Open or short in heated oxygen sensor circuit • Heated oxygen sensor

HINT: After confirming DTC P0125 use the OBD II scan tool or TOYOTA hand-held tester to confirm voltage output of heated oxygen sensor from "CURRENT DATA".
If voltage output of heated oxygen sensor is 0 V, heated oxygen sensor circuit may be open or short.

WIRING DIAGRAM

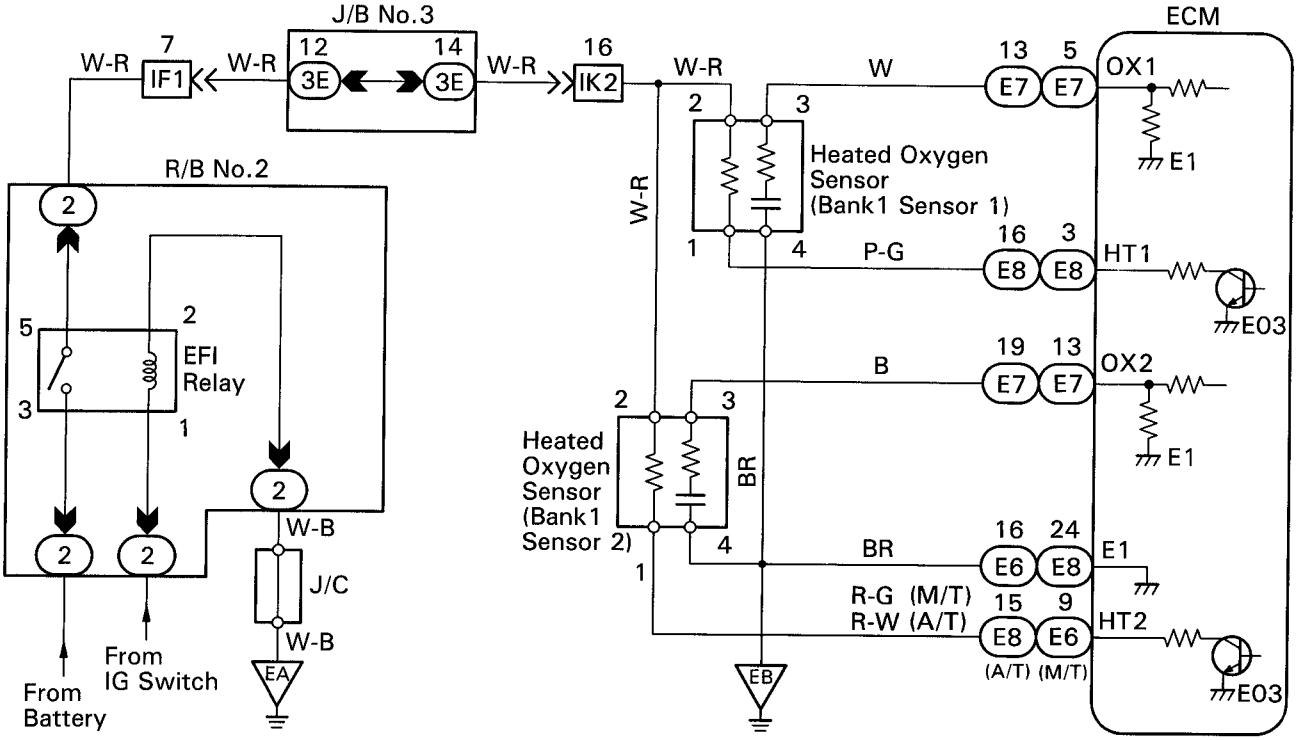

P23433

INSPECTION PROCEDURE

1 **Connect the OBD II scan tool or TOYOTA hand-held tester and read value for voltage output of heated oxygen sensor.**

P (1) Connect the OBD II scan tool or TOYOTA hand-held tester to the DLC3.
(2) Warm up engine to normal operating temperature.

C Read voltage output of heated oxygen sensor (bank 1 sensor 1) when engine is suddenly raced.

HINT: Perform quick racing to 4,000 rpm 3 times using accelerator pedal.

OK **Heated oxygen sensor (bank 1 sensor 1) output a RICH signal (0.45 V or more) at least once.**

NG

OK → **Check and replace ECM (See page IN-29).**

2 **Check for open and short in harness and connector between ECM and heated oxygen sensor (See page IN-24).**

OK

NG → **Repair or replace harness or connector.**

Replace heated oxygen sensor.

DTC P0130 Heated Oxygen Sensor Circuit Malfunction (Bank 1 Sensor 1)

CIRCUIT DESCRIPTION

Refer to Insufficient Coolant Temp. for Closed Loop Fuel Control on page EG-233.

DTC No.	DTC Detecting Condition	Trouble Area
P0130	Voltage output of heated oxygen sensor remains at 0.4 V or more, or 0.55 V or less, during idling after the engine is warmed up (2 trip detection logic)	• Heated oxygen sensor • Fuel trim malfunction

HINT: Sensor 1 refers to the sensor closer to the engine body.
The heated oxygen sensor's output voltage and the short-term fuel trim value can be read using the OBD II scan tool or TOYOTA hand-held tester.

EG

WIRING DIAGRAM

Refer to page EG-234 for the WIRING DIAGRAM.

CONFIRMATION DRIVING PATTERN

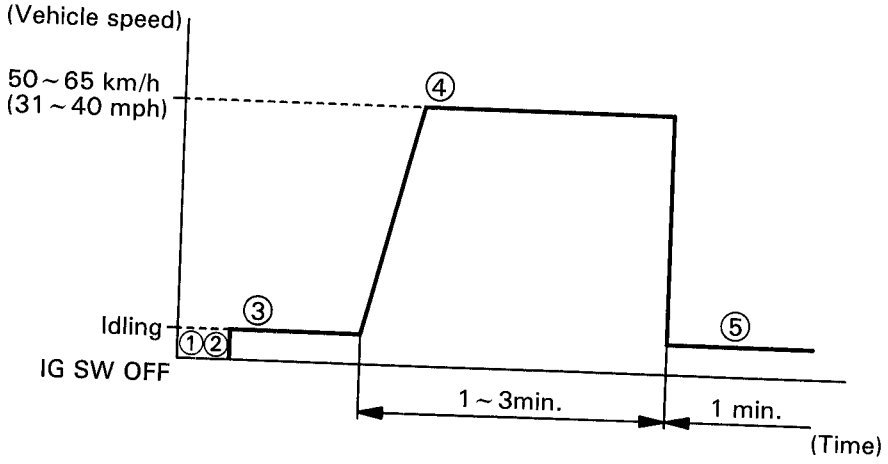

FI7130

① Connect the TOYOTA hand-held tester to the DLC3.
② Switch the TOYOTA hand-held tester from normal mode to check mode (See page EG-198).
③ Start the engine and warm it up with all accessory switches OFF.
④ Drive the vehicle at 50 ~ 65 km/h (31 ~ 40 mph) for 1 ~ 3 min. to warm up the heated oxygen sensor.
⑤ Let the engine idle for 1 min.

HINT: If a malfunction exists, the MIL will light up during step ⑤.

NOTICE: If the conditions in this test are not strictly followed, detection of the malfunction will not be possible.
If you do not have a TOYOTA hand-held tester, turn the ignition switch OFF after performing steps ③ to ⑤, them perform steps ③ to ⑤ again.

INSPECTION PROCEDURE

1 **Check for open and short in harness and connector between ECM and heated oxygen sensor (See page IN-24).**

OK → **2**

NG → **Repair or replace harness or connector.**

2 **Check for heated oxygen sensor data.**

EG

P (1) Connect the OBD II scan tool or TOYOTA hand-held tester to the DLC3.
(2) Warm up engine to normal operating temperature.

C Read the heated oxygen sensor output voltage and short-term fuel trim.

Result

Pattern	Heated oxygen sensor output voltage	Short-term fuel trim
①	Lean condition (Changes at 0.55 V or less)	Changes at about +20 %
②	Rich condition (Changes at 0.4 V or more)	Changes at about −20 %
③	Except ① and ②	

③ → **3**

①,② → **Check fuel trim system. (See page EG-239)**

3 **Check the output voltage of heated oxygen sensor during idling.**

P Warm up the heated oxygen sensor with the engine at 2,500 rpm for approx. 90 sec.

C Use the OBD II scan tool or TOYOTA hand-held tester read the output voltage of the heated oxygen sensor during idling.

OK **Heated oxygen sensor output voltage:**
Alternates repeatedly between less than 0.4 V and more than 0.55 V (See the following table).

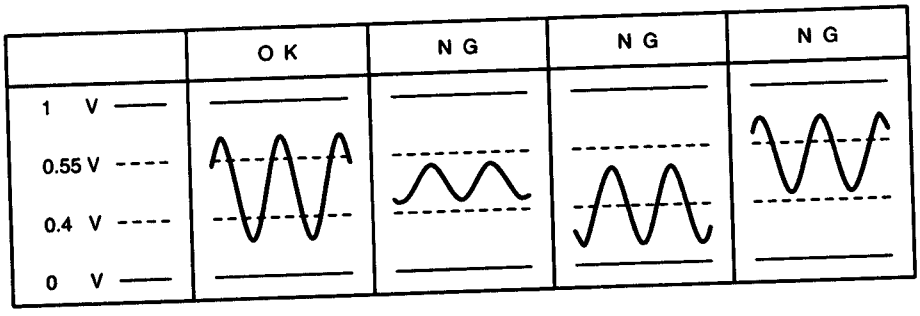

T

P18349

NG → **Replace heated oxygen sensor.**

OK → **Perform confirmation driving pattern. (See page EG-235)**

DTC P0133 Heated Oxygen Sensor Circuit Slow Response (Bank 1 Sensor 1)

CIRCUIT DESCRIPTION

Refer to Insufficient Coolant Temp. for Closed Loop Fuel Control on page EG-233.

DTC No.	DTC Detecting Condition	Trouble Area
P0133	Response time for the heated oxygen sensor's voltage output to change from rich to lean, or from lean to rich, is 1 sec. or more during idling after the engine is warmed up (2 trip detection logic)	• Heated oxygen sensor

HINT: Sensor 1 refers to the sensor closer to the engine body.

EG

INSPECTION PROCEDURE

1 Are there any other codes (besides DTC P0133) being output?

NO

YES → Go to relevant DTC chart.

Replace heated oxygen sensor.

DTC P0135 Heated Oxygen Sensor Heater Circuit Malfunction (Bank 1 Sensor 1)

DTC P0141 Heated Oxygen Sensor Heater Circuit Malfunction (Bank 1 Sensor 2)

CIRCUIT DESCRIPTION

Refer to Insufficient Coolant Temp. for Closed Loop Fuel Control on page EG-233.

DTC No.	DTC Detecting Condition	Trouble Area
P0135 P0141	When the heater operates, heater current exceeds 2 A or voltage drop for the heater circuit exceeds 5 V (2 trip detection logic)	• Open or short in heater circuit of heated oxygen sensor • Heated oxygen sensor heater • ECM
	Heater current of 0.25 A or less when the heater operates. (2 trip detection logic)	

HINT: Sensor 1 refers to the sensor closer to the engine body.
Sensor 2 refers to the sensor farther away from the engine body.

WIRING DIAGRAM

Refer to page EG-234 for the WIRING DIAGRAM.

INSPECTION PROCEDURE

1 **Check voltage between terminals HT1, HT2 of ECM connector and body ground.**

ON

For A/T

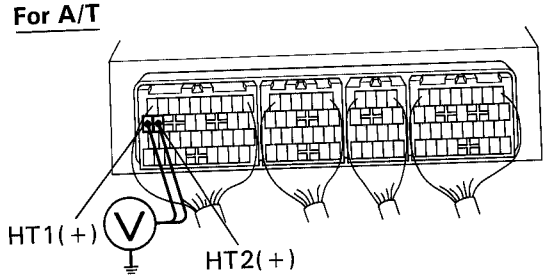

For M/T

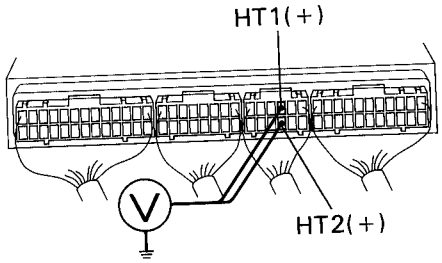

BE6653
P24317
P24318

P (1) Remove glove compartment (See page EG-161).
(2) Trun igintion switch ON.

C Measure voltage between terminals HT1, HT2 of ECM connector and body ground.

HINT: Connect terminal HT1 to bank 1 sensor 1.
Connect terminal HT2 to bank 1 sensor 2.

OK **Voltage: 9 – 14 V**

NG → **OK** → **Check and replace ECM (See page IN-29).**

2 **Check resistance of heated oxygen sensor heater (See page EG-159).**

OK → **NG** → **Replace heated oxygen sensor.**

Check and repair harness or connector between EFI relay and heated oxygen sensor and ECM (See page IN-24).

DTC P0136 Heated Oxygen Sensor Circuit Malfunction (Bank 1 Sensor 2)

CIRCUIT DESCRIPTION

Refer to Insufficient Coolant Temp. for Closed Loop Fuel Control on page EG-233.

DTC No.	DTC Detecting Condition	Trouble Area
P0136	Voltage output of the heated oxygen sensor (bank 1 sensor 2) remains at 0.4 V or more or 0.5 V or less when the vehicle is driven at 50 km/h (31 mph) or more after the engine is warmed up (2 trip detection logic)	• Heated oxygen sensor

HINT: Sensor 2 refers to the sensor farther away from the engine body.

WIRING DIAGRAM

Refer to page EG-234 for the WIRING DIAGRAM.

INSPECTION PROCEDURE

1 Are there any other codes (besides DTC P0136) being output?

NO

YES → Go to relevant DTC chart.

2 Check for open and short in harness and connector between ECM and heated oxygen sensor (See page IN-24).

OK

NG → Repair or replace harness or connector.

3 Check the output voltage of heated oxygen sensor (bank 1 sensor 2).

P (1) Connect the OBD II scan tool or TOYOTA hand-held tester to the DLC3.
(2) Warm up engine to normal operating temperature.

C Read voltage output of heated oxygen sensor (bank 1 sensor 2) when engine suddenly reced.

HINT: Perform quick racing to 4,000 rpm 3 mins. using accelerator pedal.

OK **Heated oxygen sensor output voltage: Alternates from 0.4 V or less to 0.5 V or more**

NG

OK → Check that each connector is properly connected.

Replace heated oxygen sensor (bank 1 sensor 2).

DTC P0171 System too Lean (Fuel Trim)

DTC P0172 System too Rich (Fuel Trim)

CIRCUIT DESCRIPTION

"Fuel trim" refers to the feedback compensation value compared against the basic injection time. Fuel trim includes short-term fuel trim and long-term fuel trim.

"Short-term fuel trim" is the short-term fuel compensation used to maintain the air-fuel ratio at its ideal theoretical value. The signal from the heated oxygen sensor indicates whether the air-fuel ratio is RICH or LEAN compared to the ideal theoretical value, triggering a reduction in fuel volume if the air-fuel ratio is rich, and an increase in fuel volume if it is lean.

"Long-term fuel trim" is overall fuel compensation carried out long-term to compensate for continual deviation of the short-term fuel trim from the central value due to individual engine differences, wear over time and changes in the usage environment.

If both the short-term fuel trim and long-term fuel trim are LEAN or RICH beyond a certain value, it is detected as a malfunction and the MIL lights up.

DTC No.	DTC Detecting Condition	Trouble Area
P0171	When the air fuel ratio feedback is stable after engine warming up, the fuel trim is considerably in error on the RICH side (2 trip detection logic)	• Air intake (hose loose) • Fuel line pressure • Injector blockage • Heated oxygen sensor malfunction • Mass air flow meter • Engine coolant temp. sensor.
P0172	When the air fuel ratio feedback is stable after engine warming up, the fuel trim is considerably in error on the LEAN side (2 trip detection logic)	• Fuel line pressure • Injector leak, blockage • Heated oxygen sensor malfunction • Mass air flow meter • Engine coolant temp. sensor.

EG

HINT:
- When DTC P0171 is recorded, the actual air-fuel ratio is on the LEAN side. When DTC P0172 is recorded, the actual air-fuel ratio is on the RICH side.
- If the vehicle runs out of fuel, the air-fuel ratio is LEAN and DTC P0171 is recorded. The MIL then comes on.
- If the total of the short-term fuel trim value and long-term fuel trim value is within ±25 %, the system is functioning normally.

INSPECTION PROCEDURE

1 Check air induction system (See page EG-117).

OK → Repair or replace.

NG

2 Check for heated oxygen sensor data.

P (1) Connect the OBD II scan tool or TOYOTA hand-held tester to the DLC3.
(2) Warm up engine to normal operating temperature.

C Read the heated oxygen sensor output voltage and short-term fuel trim.

Result

Pattern	Heated oxygen sensor output voltage	Short-term fuel trim
①	Lean condition (Changes at 0.55 V or less)	Changes at about +20 %
②	Rich condition (Changes at 0.4 V or more)	Changes at about −20 %
③	Except ① and ②	

①,② → **3**

③ → Check for heated oxygen sensor (See page EG-235).

3 Check fuel pressure (See page EG-122).

OK

NG → Check and repair fuel pump, pressure regulator, fuel pipe line and filter (See page EG-121).

4	Check injector injection (See page EG-131).

OK

NG → Replace injector.

5	Check mass air flow meter and engine coolant temp. sensor. (See page EG-218, 225)

OK

NG → Repair or replace.

6	Check for spark and ignition (See page IG-17).

OK

NG → Repair or replace.

Check and replace ECM (See page IN-29).

DTC	P0300	Random/Multiple Cylinder Misfire Detected
DTC	P0301	Cylinder 1 Misfire Detected
DTC	P0302	Cylinder 2 Misfire Detected
DTC	P0303	Cylinder 3 Misfire Detected
DTC	P0304	Cylinder 4 Misfire Detected
DTC	P0305	Cylinder 5 Misfire Detected
DTC	P0306	Cylinder 6 Misfire Detected

CIRCUIT DESCRIPTION

Misfire: The ECM uses the crankshaft position sensor and camshaft position sensor to monitor changes in the crankshaft rotation for each cylinder.

The ECM counts the number of times the engine speed change rate indicates that misfire has occurred. When the misfire rate equals or exceeds the count indicating that the engine condition has deteriorated, the MIL lights up.

If the misfire rate is high enough and the driving conditions will cause catalyst overheating, the MIL blinks when misfiring occurs.

DTC No.	DTC Detecting Condition	Trouble Area
P0300	Misfiring of random cylinders is detected during the any particular 200 or 1,000 revolutions	• Ignition system • Injector • Fuel line pressure • EGR • Compression pressure • Valve clearance not to specification • Valve timing • Mass air flow meter • Engine coolant temp. sensor
P0301 P0302 P0303	For any particular 200 revolutions of the engine, misfiring is detected which can cause catalyst overheating (This causes MIL to blink)	
P0304 P0305 P0306	For any particular 1,000 revolutions of the engine, misfiring is detected which causes a deterioration in emission (2 trip detection logic)	

HINT: When the 2 or more codes for a misfiring cylinder are recorded repeatedly but no Random Misfire code is recorded, it indicates that the misfires were detected and recorded at different times.

WIRING DIAGRAM

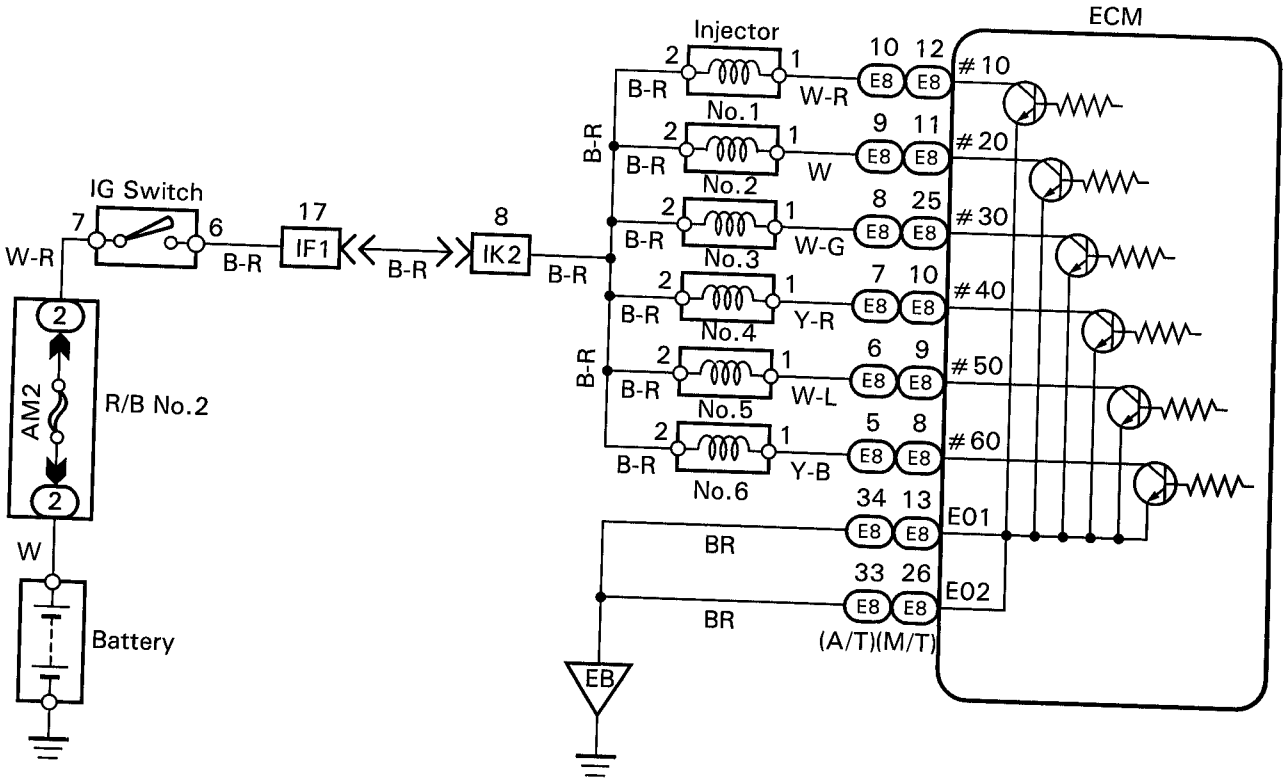

P23434

Reference INSPECTION USING OSCILLOSCOPE

INJECTOR SIGNAL WAVEFORM

- With the engine idling, measure between terminals #10 ~ #60 and E01 of ECM.

HINT: The correct waveform is as shown.

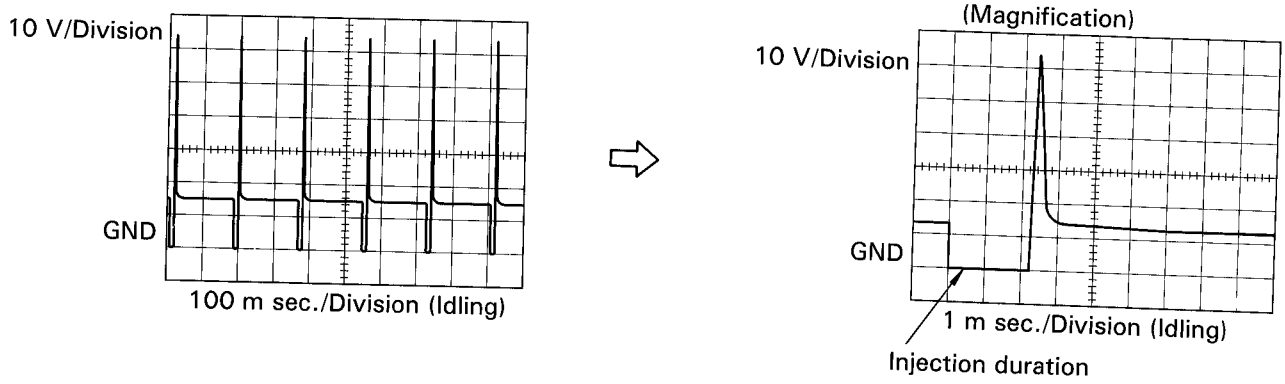

FI6588 FI6538

EG

INSPECTION PROCEDURE

1 Check spark plug and spark of misfiring cylinder.

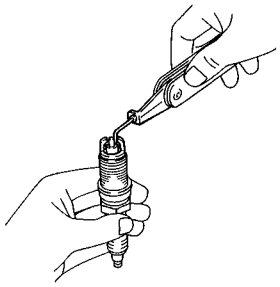

P20584

P (1) Remove ignition coil and high-tension cord.
(2) Remove spark plug.

C (1) Check spark plug type.
(2) Check for carbon deposits on electrode.
(3) Check electrode gap.

OK **(1) Twin ground electrodes type.**
Recommended spark plug: ND K16TR11
NGK BKR5EKB-11
(2) No large carbon deposit present.
Not wet with gasoline or oil.
(3) Electrode gap: 1.0 — 1.1 mm
(0.039 — 0.043 in.)

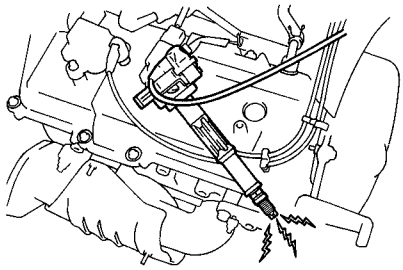

P21163

P (1) Install the spark plug to the ignition coil or hightension cord.
(2) Ground the spark plug.
(3) Disconnect injector connector.

C Check if spark occurs while engine is being cranked.

NOTICE: To prevent excess fuel being injected from the injectors during this test, don't crank the engine for more than 5 — 10 seconds at a time.

OK **Spark jumps across electrode gap.**

OK → **NG** → **Replace or check ignition system (See page IG-17).**

2 Check voltage of ECM terminal for injector of failed cylinder.

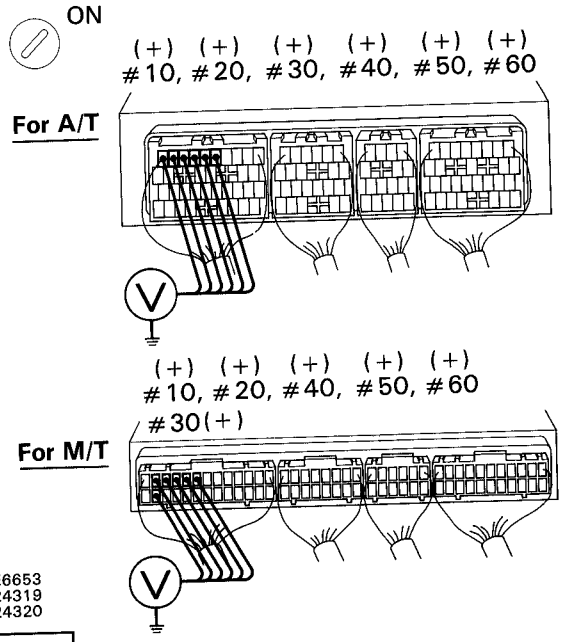

BE6653
P24319
P24320

P (1) Remove glove compartment (See page EG-161).
(2) Trun ignition switch ON.

C Measure voltage between applicable terminal of ECM and body ground.

OK **Voltage: 9 — 14 V**

NG → **OK** → **Go to step 4 .**

3 Check injector of misfiring cylinder.

P Disconnect injector connector (See page EG-130).

C Measure resistance of injector.

OK Resistance: At 20°C (68°F): Approx. 13.8 Ω

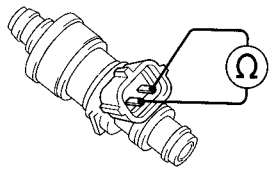

P24321

EG

OK → NG → Replace injector.

Check for open and short in harness and connector between injector and ECM (See page IN-24).

4 Check fuel pressure (See page EG-122).

OK → NG → Check and repair fuel pump, pressure regulator, fuel pipe line and filter (See page EG-121).

5 Check injector injection (See page EG-131).

OK → NG → Replace injector.

6 Check EGR system (See page EG-111).

OK → NG → Repair EGR system.

7 Check mass air flow meter and engine coolant temp. sensor (See page EG-218, 225).

OK → NG → Repair or replace.

Check engine mechanical systems
- Compression pressure (See page EG-7)
- Valve clearance (See page EG-8)
- Valve timing (See page EG-25)

DTC P0325 Knock Sensor 1 Circuit Malfunction

DTC P0330 Knock Sensor 2 Circuit Malfunction

CIRCUIT DESCRIPTION

Knock sensors are fitted one each to the right bank and left bank of the cylinder block to detect engine knocking. This sensor contains a piezoelectric element which generates a voltage when it becomes deformed, which occurs when the cylinder block vibrates due to knocking. If engine knocking occurs, ignition timing is retarded to suppress it.

DTC No.	DTC Detecting Condition	Trouble Area
P0325	No knock sensor 1 signal to ECM with engine speed 2,000 rpm or more	• Open or short in knock sensor 1 circuit • Knock sensor 1 (looseness) • ECM
P0330	No knock sensor 2 signal to ECM with engine speed 2,000 rpm or more	• Open or short in knock sensor 2 circuit • Knock sensor 2 (looseness) • ECM

If the ECM detects the above diagnosis conditions, it operates the fail safe function in which the corrective retard angle value is set to the maximum value.

WIRING DIAGRAM

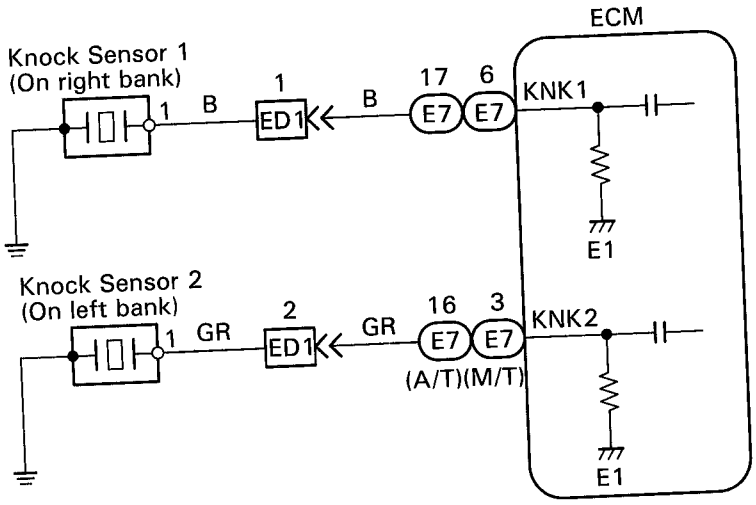

P19919

INSPECTION PROCEDURE

HINT: DTC P0325 is for the right bank knock sensor circuit.
DTC P0330 is for the left bank knock sensor circuit.

1 Connect the OBD Ⅱ scan tool or TOYOTA hand-held tester and check the knock sensor circuit.

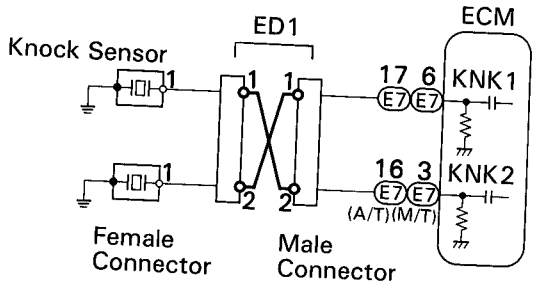

P

(1) Connect the OBD Ⅱ scan tool or TOYOTA hand-held tester to the DLC3.
(2) Disconnect the wire to wire connector ED1.
(3) Connect the terminals of the disconnected ED1 male connector and ED1 female as follows.

Male connector ↔ Female connector
Terminal 1 ↔ Terminal 2
Terminal 2 ↔ Terminal 1

(4) Turn ignition switch ON and switch the OBD Ⅱ scan tool or TOYOTA hand-held tester main switch ON.
(5) After the engine is warmed up, perform quick racing (4,000 rpm) three times.

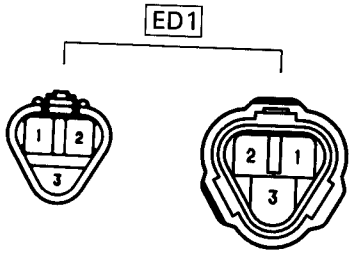

C Check the DTC.

Result

Type Ⅰ	DTC same as when vehicle brought in. P0325→P0325 or P0330→P0330
Type Ⅱ	DTC different to when vehicle brought in. P0325→P0330 or P0330→P0325

P20457
Ie-3-1-K
Ie-3-2-K

Type Ⅰ

Type Ⅱ → **Go to step 3 .**

2 Check for open and short in harness and connector between ED1 connector and ECM (See page IN-24).

OK

NG → **Repair or replace harness or connector.**

Check and replace ECM (See page IN-29).

EG

3	Check for open and short in harness and connector between ED1 connector and knock sensor (See page IN-24).

HINT: If DTC P0325 has changed to P0330, check the knock sensor circuit on the right bank side.
If DTC P0330 has changed to P0325, check the knock sensor circuit on the left bank side.

OK

NG → **Repair or replace harness or connector.**

EG

Replace knock sensor.

Reference INSPECTION USING OSCILLOSCOPE

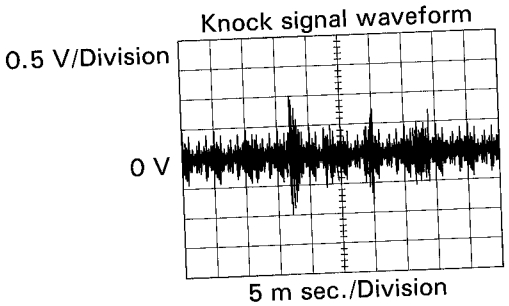

- With the engine racing (4,000 rpm) measure between terminals KNK1, KNK2 of ECM and body ground.

HINT: The correct waveform appears as shown in the illustration on the left.

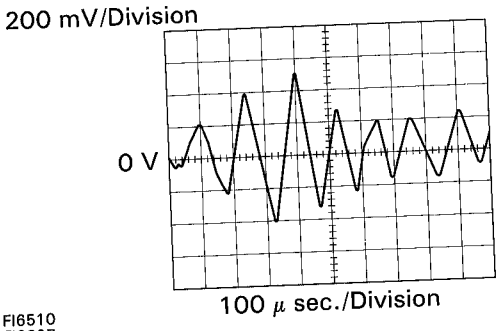

- Spread the time on the horizontal axis, and confirm that period of the wave is 141 μ sec.
(Normal mode vibration frequency of knock sensor: 7.1 KHz).

HINT: If normal mode vibration frequency is not 7.1 kHz, the sensor is malfunctioning.

FI6510
FI6607

DTC P0335 Crankshaft Position Sensor "A" Circuit Malfunction

CIRCUIT DESCRIPTION

The crankshaft position sensor, which detects the engine speed and crankshaft angle signal (NE signal), has been installed on the oil pump body.
The NE signal plate has 34 teeth. The NE signal sensor generates 34 signals for every engine revolution. The ECM detects the standard crankshaft angle based on the G signals, and the actual crankshaft angle and the engine speed by the NE signals.

DTC No.	DTC Detecting Condition	Trouble Area
P0335	No crankshaft position sensor signal to ECM during cranking (2 trip detection logic)	• Open or short in crankshaft position sensor circuit • Crankshaft position sensor • Starter • ECM
	No crankshaft position sensor signal to ECM with engine speed 600 rpm or more (2 trip detection logic)	

WIRING DIAGRAM

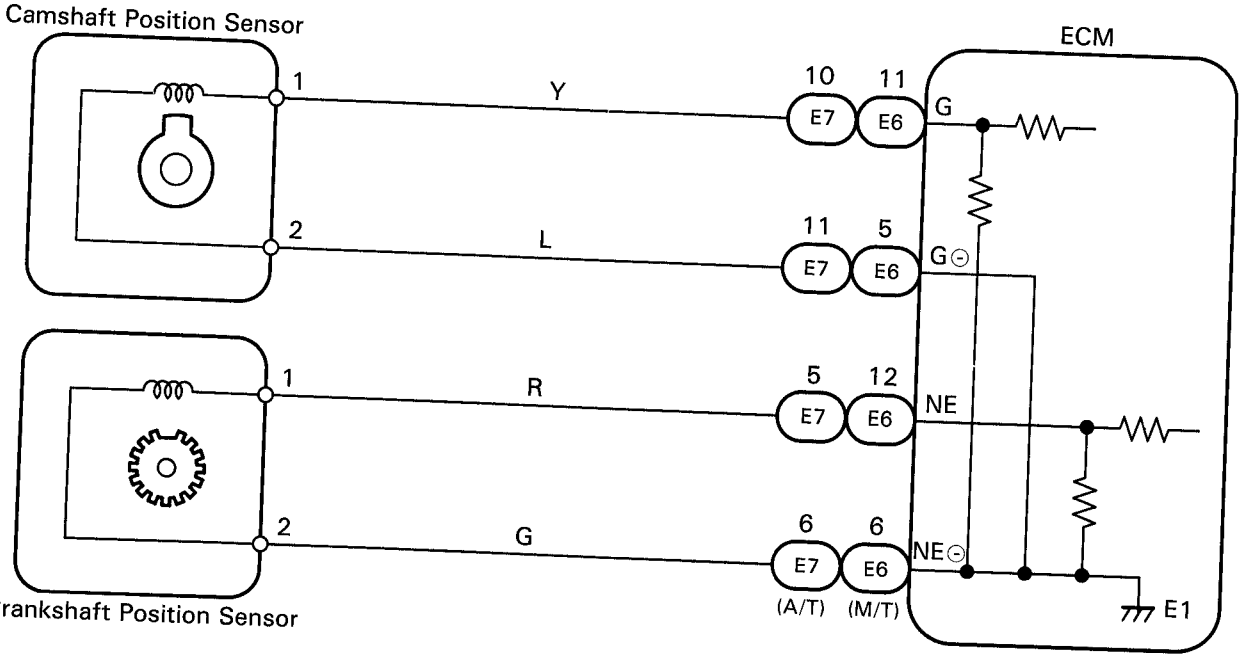

INSPECTION PROCEDURE

HINT: Perform troubleshooting of DTC P0335 first. If no trouble is found, troubleshoot the following mechanical systems.

1 **Check resistance of crankshaft position sensor (See page IG-22).**

Reference INSPECTION USING OSCILLOSCOPE

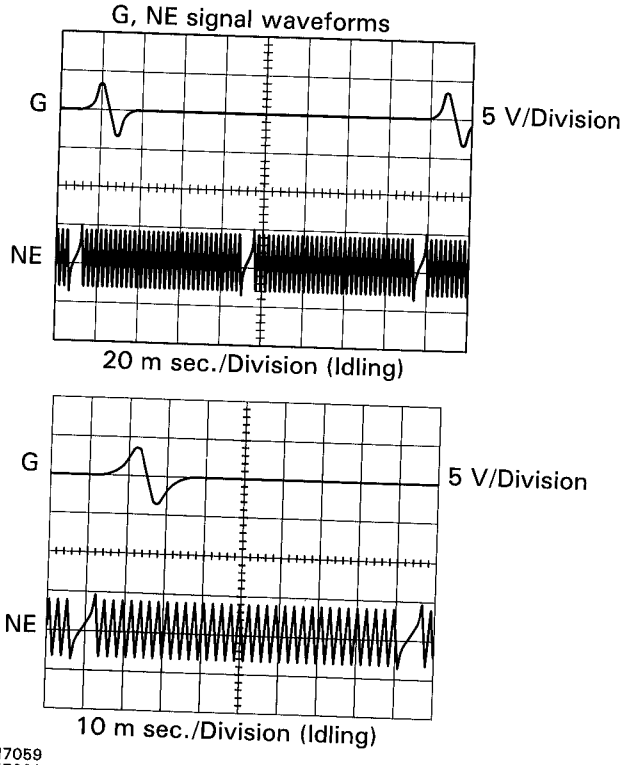

- During cranking idling, check between terminals G and G⊖, NE and NE⊖ of ECM.

HINT: The correct waveforms are as shown in.

OK

NG **Replace crankshaft position sensor.**

2	Check for open and short in harness and connector between ECM and crankshaft position sensor (See page IN-24).

OK → NG → Repair or replace harness or connector.

3	Inspect sensor installation and teeth of signal plate.

OK → NG → Tighten the sensor. Replace signal plate.

Check and replace ECM (See page IN-29).

DTC P0340 Camshaft Position Sensor Circuit Malfunction

CIRCUIT DESCRIPTION

The camshaft position sensor, which detects the crankshaft angle signal (G signal), has been installed on the fornt of right bank cylinder head. The timing rotor has been integrated with the right bank camshaft timing pulley. When the camshafts rotate, the protrusion on the timing rotor and the air gap on the pick up coil change, causing fluctuations, in the magnetic field and generating an electromotive force in the pick up coil. The NE signal plate has 34 teeth and is mounted on the crankshaft. The NE signal sensor generates 34 signals for every engine revolution. The ECM detects the standard crankshaft angle based on the G signals and the actual crankshaft angle and the engine speed by the NE signals.

DTC No.	DTC Detecting Condition	Trouble Area
P0340	No camshaft position sensor signal to ECM during cranking (2 trip detection logic)	• Open or short in camshaft position sensor circuit • Camshaft position sensor • Starter • ECM
	No camshaft position sensor signal to ECM during engine running	

WIRING DIAGRAM

Refer to page EG-249 for the WIRING DIAGRAM.

INSPECTION PROCEDURE

1	Check resistance of camshaft position sensor (See page IG-21).

Reference INSPECTION USING OSCILLOSCOPE

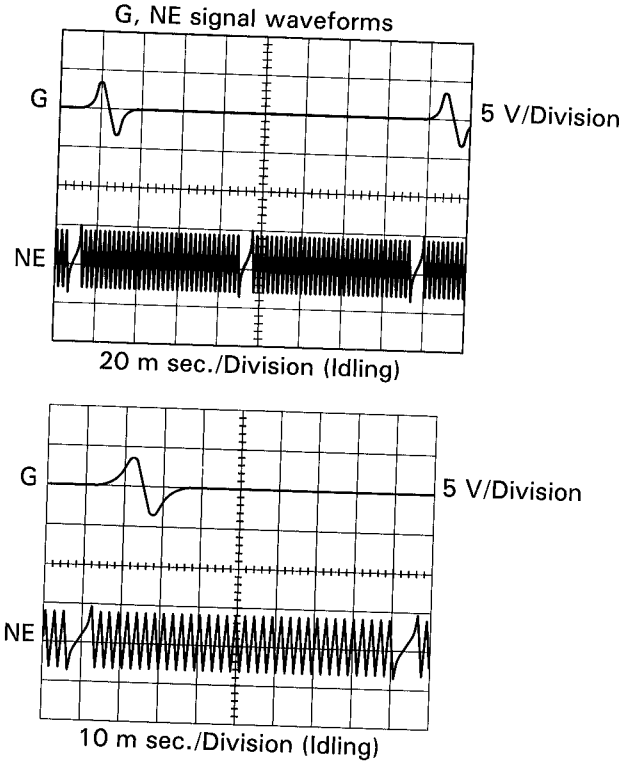

FI7059
FI7060

- During cranking or idling, check between terminals G and G⊖, NE and NE⊖ of ECM.

HINT: The correct waveforms are as shown in.

EG

OK → NG: Replace camshaft position sensor.

2 Check for open and short in harness and connector between ECM and camshaft position sensor (See page IN-24).

OK → NG: Repair or replace harness or connector.

3 Inspect sensor installation.

OK → NG: Tighten the sensor.

Check and replace ECM (See page IN-29).

DTC P0401 Exhaust Gas Recirculation Flow Insufficient Detected

CIRCUIT DESCRIPTION

The EGR system recirculates exhaust gas, which is controlled to the proper quantity to suit the driving conditions, into the intake air mixture to slow down combustion, reduce the combustion temperature and reduce NOx emissions. The amount of EGR is regulated by the EGR vacuum modulator according to the engine load.

If even one of the following conditions is fulfilled, the VSV is turned ON by a signal from the ECM. This results in atmospheric air acting on the EGR valve, closing the EGR valve and shutting off the exhaust gas (EGR cut-off).

Under the following conditions, EGR is cut to maintain driveability.

- Before the engine is warmed up.
- During deceleration (throttle valve closed).
- Light engine load (amount of intake air very small).
- Engine racing.

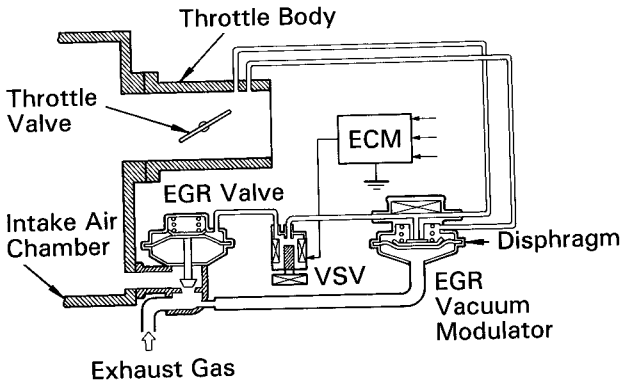

DTC No.	DTC Detecting Condition	Trouble Area
P0401	After the engine is warmed up and run at 80 km/h (50 mph) for 3 to 5 minutes, the EGR gas temperature sensor value does not exceed 60°C (140°F) above the ambient air temperature (2 trip detection logic)	• EGR valve stuck closed • Short in VSV circuit for EGR • Open in EGR gas temp. sensor circuit • EGR hose disconnected • ECM

WIRING DIAGRAM

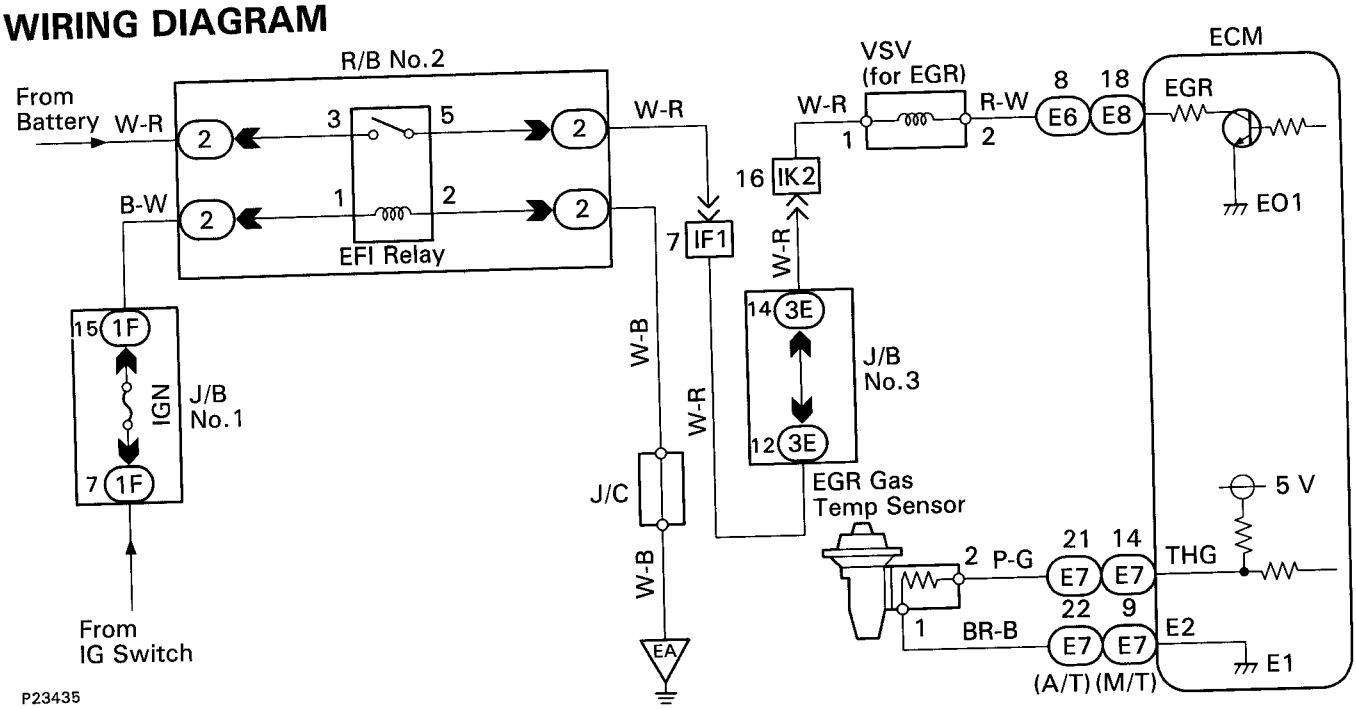

SYSTEM CHECK DRIVING PATTERN

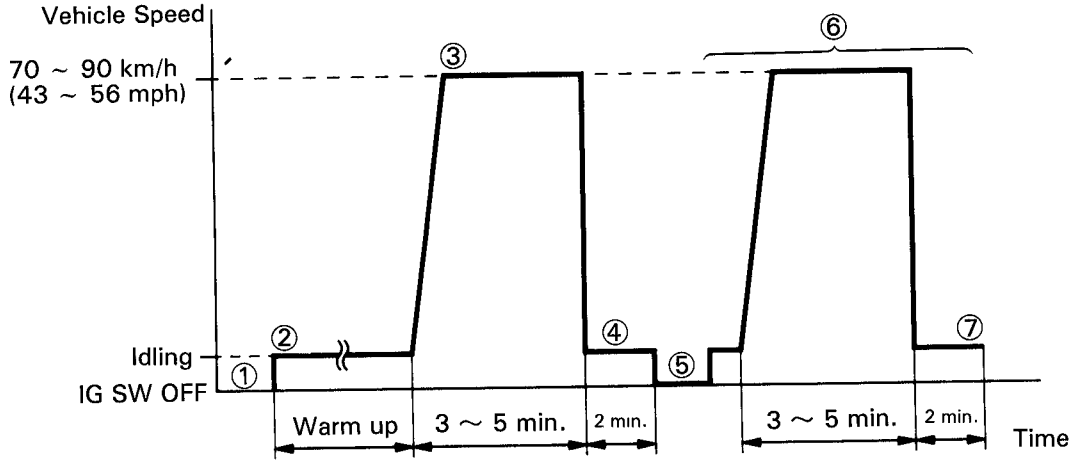

P20769

① Connect the OBD II scan tool or TOYOTA hand-held tester to the DLC3.
② Start and warm up the engine with all accessories switched OFF.
③ Run the vehicle at 70 ~ 90 km/h (43 ~ 56 mph) for 3 min. or more.
④ Idle the engine for about 2 min.
⑤ Stop at safe place and turn the ignition switch OFF.
⑥ Start the engine and do steps ③ and ④ again.
⑦ Check the "READINESS TESTS" mode on the OBD II scan tool or TOYOTA hand-held tester. If "COMPL" is displayed and the MIL does not light up, the system is normal. If "INCMPL" is displayed and the MIL does not light up, run the vehicle again and check it.

HINT: "INCMPL" is displyed when either condition (a) or (b) exists.
(a) The system check is incomplete.
(b) There is a malfunction in the system.
If there is a malfunction in the system, the MIL will light up after steps ② to ⑥ above are done.

INSPECTION PROCEDURE

TOYOTA hand-held tester

1	**Connect the TOYOTA hand-held tester and read value of EGR gas temperature.**

P (1) Connect the TOYOTA hand-held tester to the DLC3.
(2) Turn ignition switch ON and push TOYOTA hand-held tester main switch ON.

C Read EGR gas temperature on the TOYOTA hand-held tester.

OK **EGR gas temp.: 10°C (50°F) or more**

HINT: If there is an open circuit, the TOYOTA hand-held tester indicates 3.1°C (37.6°F).

NG

OK → **Go to step 4 .**

2 Check for open in harness or ECM.

ON

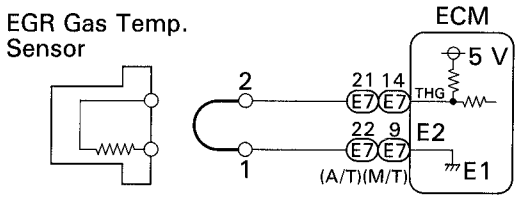

BE6653
P19555

P (1) Disconnect the EGR gas temp. sensor connector.
(2) Connect sensor wire harness terminals together.
(3) Turn ignition switch ON.

C Read EGR gas temperature on the TOYOTA hand-held tester.

OK **EGR gas temp.: Approx. 159°C (318.2°F)**

NG

OK → **Confirm good connection at sensor. If OK, replace EGR gas temp. sensor.**

3 Check for open in harness or ECM.

ON

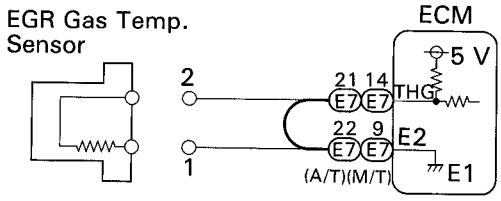

For A/T

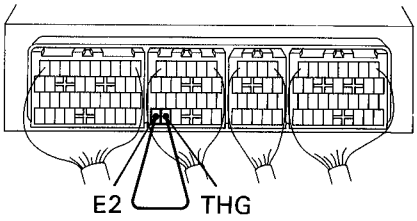

For M/T

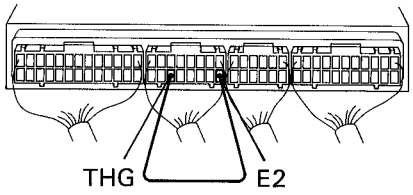

BE6653
P19553
P20205
P20229

P (1) Remove glove compartment (See page EG-161).
(2) Connect between terminals THG and E2 of ECM connector.

HINT: EGR gas temp. sensor connector is disconnected. Before checking, do a visual check and contact pressure check for the ECM connector (See page EG-206).

C Read EGR temperature on the TOYOTA hand-held tester.

OK **EGR gas temp.: Approx. 159°C (318.2°F)**

NG

OK → **Open in harness between terminals E2 or THG. Repair or replace harness.**

Confirm connection at ECM. If OK, replace ECM.

4 Check the connection of the vacuum hose, EGR hose (See page EG-108).

OK

NG → **Repair or replace.**

EG

5 **Check the VSV for EGR.**

System: OFF

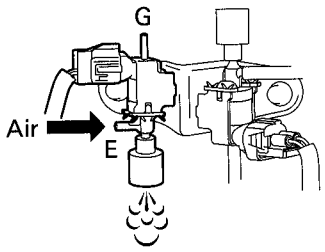

System: ON

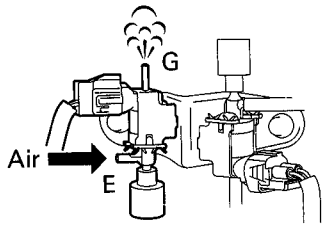

P21166
P21165

P Select the ACTIVE TEST mode on the TOYOTA hand-held tester.

C Check operation of VSV, when it is operated by the TOYOTA hand-held tester.

OK **EGR system is OFF:**
Air from pipe E is flowing out through the air filter.
EGR system is ON:
Air from pipe E is flowing out through pipe G.

EG

NG

OK → **Go to step 7.**

6 **Check operation of the VSV for EGR (See page EG-149).**

OK

NG → **Replace VSV for EGR.**

Check for open in harness and connector between VSV and ECM (See page IN-24).

7 **Check EGR vacuum modulator (See page EG-113).**

OK

NG → **Repair or replace.**

8 **Check EGR valve (See page EG-111).**

OK

NG → **Repair or replace.**

9 **Check value of EGR gas temp. sensor.**

P (1) Connect the TOYOTA hand-held tester to the DLC3.
(2) Turn ignition switch ON and push TOYOTA hand-held tester main switch ON.
(3) Select the ACTIVE TEST mode on the TOYOTA hand-held tester. (EGR system ON)
(4) Race the engine at 4,000 rpm for 3 min.

C Measure the EGR gas temp. while racing engine at 4,000 rpm.

OK **EGR gas temp. after 3 min.: 140°C (284°F) or more**

EG

OK → **Check and replace ECM (See page IN-29).**

NG → **Replace EGR gas temp. sensor.**

OBD II scan tool (excluding TOYOTA hand-held tester)

1 **Check resistance of EGR gas temp. sensor.**

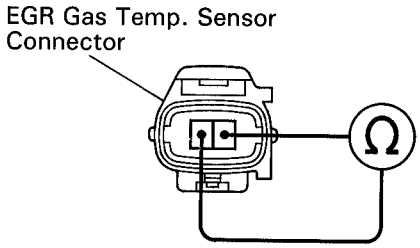

P24322

P Disconnect EGR gas temp. sensor connector.

C Measure resistance between terminals of EGR gas temp. sensor connector.

OK **Resistance: 600 kΩ or less.**

HINT: If there is open circuit, ohmmeter indicates 720 kΩ or more.

OK → **Check and replace EGR gas temp. sensor (See page EG-159).**

NG

2 **Check for open in harness or ECM.**

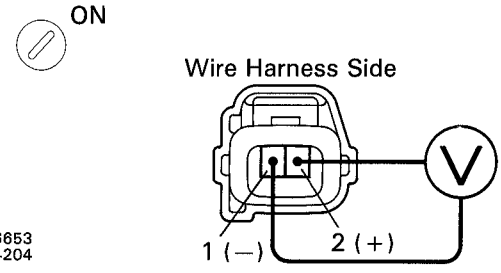

BE6653
P24204

P (1) Disconnect EGR gas temp. sensor connector.
(2) Turn ignition switch ON.

C Measure voltage between terminals of EGR gas temp. sensor wire harness side connector.

OK **Voltage: 4.5 − 5.5 V**

OK → **Go to step 4 .**

NG

3 Check for open in harness or ECM.

ON

For A/T

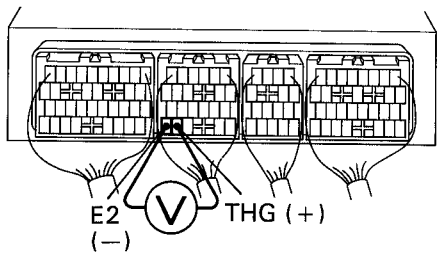

For M/T

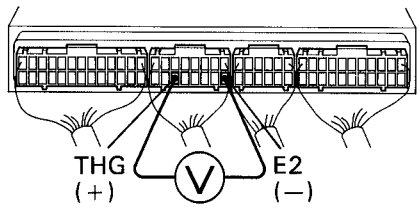

BE6653
P24323
P24203

P (1) Remove glove compartment (See page EG-161).
(2) Turn ignition switch ON.

C Measure voltage between terminals THG and E2 of ECM.

HINT: EGR gas temp. sensor connector is disconnected.

OK **Voltage: 4.5 − 5.5 V**

EG

NG → **Open in harness between terminals E2 or THG. Repair or replace harness.**

OK → **Confirm connection at ECM. If OK, replace ECM.**

4 Check connection of vacuum hose, EGR hose (See page EG-108).

OK → **Repair or replace.**

NG

5 Check the VSV for EGR.

ON

For A/T

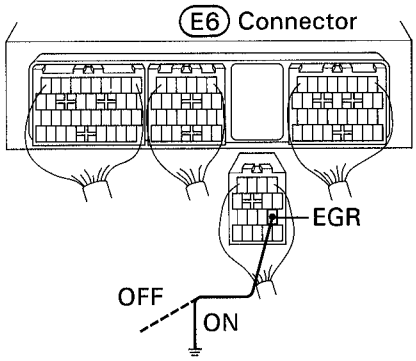

For M/T

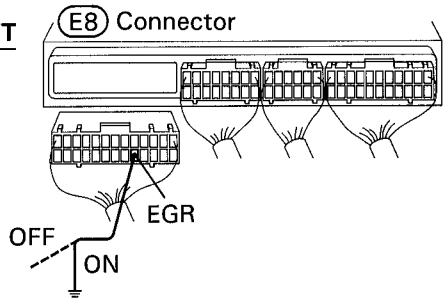

ON

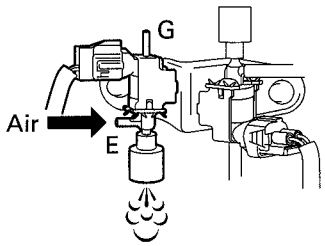

OFF

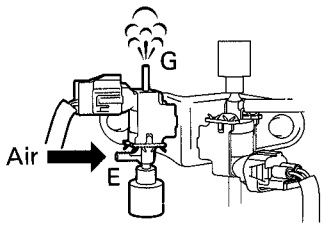

BE6653
P21117
P21116
P21166
P21165

P
(1) Remove glove compartment (See page EG-161).
(2) Disconnect ECM (E6) (for A/T) or (E8) (for M/T) connector.
(3) Turn ignition switch ON.

C
Check VSV function
(1) Connect between terminal EGR of ECM and body ground (ON).
(2) Disconnect between terminal EGR of ECM and body ground (OFF).

OK
(1) VSV is ON:
Air from pipe E flows out through the air filter.
(2) VSV is OFF:
Air from pipe E flows out through pipe G.

NG

OK → **Go to step 7 .**

6 Check operation of the VSV for EGR (See page EG-149).

OK

NG → **Replace VSV for EGR.**

Check for open in harness and conncetor between R/B No.2 and ECM (See page IN-24).

7 Check EGR vacuum modulator (See page EG-113).

OK → NG: Repair or replace.

8 Check EGR valve (See page EG-111).

OK → NG: Repair or replace.

9 Check resistance of EGR gas temp. sensor.

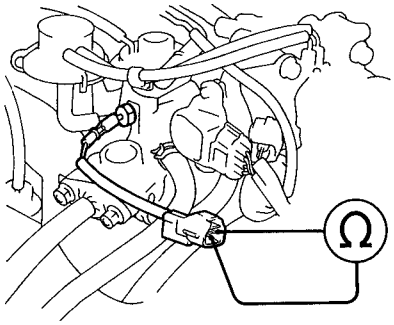

P24227

P (1) Disconnect EGR gas temp. sensor connector.
(2) Start the engine and warm it up.
(3) Disconnect VSV connector for EGR.
(4) Race the engine at 4,000 rpm for 3 min.

C Measure the resistance of the EGR gas temp. sensor while racing the engine at 4,000 rpm.

OK **Resistance of EGR gas temp. sensor after 3 min.: 4.3 kΩ or less**

HINT: Resistance: 20°C (68°F): 188.6 – 439.0 kΩ

OK → NG: Replace EGR gas temp. sensor.

Check and replace ECM (See page IN-29).

DTC P0402 Exhaust Gas Recirculation Flow Excessive Detected

CIRCUIT DESCRIPTION

Refer to Exhaust Gas Recirculation Flow Insufficient Detected on page EG-252.

DTC No.	DTC Detecting Condition	Trouble Area
P0402	EGR gas temp. sensor value is high during EGR cut-off when engine is cold (Race engine at about 4,000 rpm without load so that vacuum is applied to port E) (2 trip detection logic)	• EGR valve stuck open • EGR VSV open malfunction • Open in VSV circuit for EGR • Short in EGR gas temp. sensor circuit • ECM
	EGR valve is always open (2 trip detection logic)	

See DTC P0401 for SYSTEM CHECK DRIVING PATTERN and WIRING DIAGRAM.

INSPECTION PROCEDURE

TOYOTA hand-held tester

1 **Connect the TOYOTA hand-held tester and read EGR gas temperature value.**

P (1) Connect the TOYOTA hand-held tester to the DLC3.
(2) Turn ignition switch ON and push TOYOTA hand-held tester main switch ON.

C Read EGR gas temperature on the TOYOTA hand-held tester.

OK **EGR gas temp.: 159°C (318.2°F) or less (Not immediately after driving)**

HINT: If there is a short circuit, the TOYOTA hand-held tester indicates Approx. 159°C (318.2°F).

NG

OK → **Go to step 4.**

2 **Check for short in harness and ECM.**

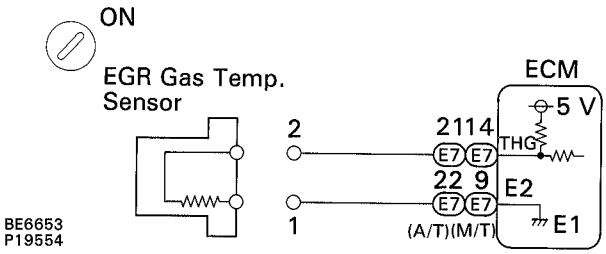

P Disconnect the EGR gas temperature sensor connector.

C Read EGR gas temperature on the TOYOTA hand-held tester.

OK **EGR gas temp.: 3.1°C (37.6°F)**

NG

OK → **Replace EGR gas temp. sensor.**

3 Check for short in harness or ECM.

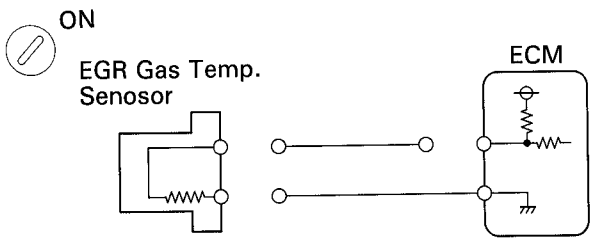

P (1) Remove glove compartment (See page EG-161).
(2) Disconnect the (E7) connector of ECM.

HINT: EGR gas temp. sensor is disconnected.

C Read EGR gas temp. on the TOYOTA hand-held tester.

OK **EGR gas temp.: 3.1°C (37.6°F)**

For A/T

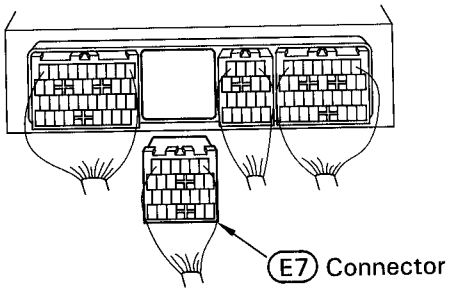

For M/T

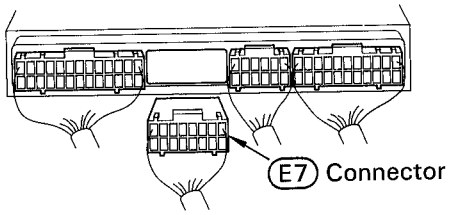

BE6653
FI7099
P17034
P17747

NG → **Repair or replace harness or connector.**

OK → **Check and replace ECM (See page IN-29).**

4 Check the VSV for EGR (See page EG-258, step 5).

NG → **Check EGR valve (See page EG-111).**

OK

5 Check operation of the VSV for EGR (See page EG-149).

NG → **Replace VSV for EGR.**

OK → **Check for short in harness and connector between VSV and ECM (See page IN-24).**

OBD II scan tool (excluding TOYOTA hand-held tester)

1 Check resistance of EGR gas temp. sensor.

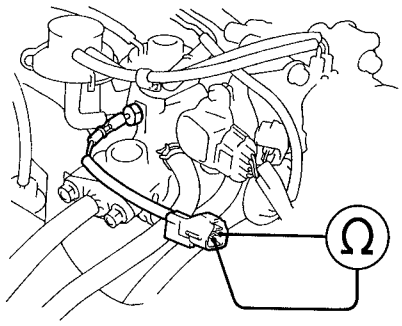

P24227

P Disconnect EGR gas temp. sensor connector.

C Measure resistance between terminals of EGR gas temp. sensor connector.

OK **Resistance: 2.5 kΩ or more (Not immediately after driving)**

HINT: If there is short circuit, ohmmeter indicates 200 Ω or less.

OK → **2** Check for short in harness and connector between EGR gas temp. sensor and ECM (See page IN-24).

NG → Replace EGR gas temp. sensor.

OK → **3** Check the VSV for EGR (See page EG-258, step 5).

NG → Repair or replace harness or connector.

OK → **4** Check operation of the VSV for EGR (See page EG-149).

NG → Check EGR valve (See page EG-111).

OK → **5** Check for short in harness and connector between VSV and ECM (See page IN-24).

NG → Repair or replace harness or connector.

OK → Check and replace ECM (See page IN-29).

DTC P0420 Catalyst System Efficiency Below Threshold

CIRCUIT DESCRIPTION

The ECM compares the waveform of the oxygen sensor located before the catalyst with the waveform of the oxygen sensor located after the catalyst to determine whether or not catalyst performance has deteriorated.

Air-fuel ratio feedback compensation keeps the waveform of the oxygen sensor before the catalyst repeatedly changing back and forth from rich to lean.
If the catalyst is functioning normally, the waveform of the oxygen sensor after the catalyst switches back and forth between rich and lean much more slowly than the waveform of the oxygen sensor before the catalyst.

But when both waveforms change at a similar rate, it indicates that catalyst performance has deteriorated.

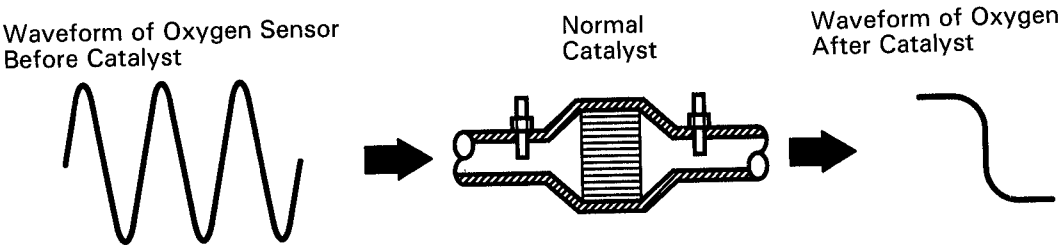

FI7081

DTC No.	DTC Detecting Condition	Trouble Area
P0420	After the engine and the catalyst are warmed up, and while the vehicle is driven within the set vehicle and engine speed range, the waveforms of the heated oxygen sensors (bank 1 sensor 1 and bank 1 sensor 2) have the same amplitude. (2 trip detection logic)	• Three-way catalytic converter • Open or short in heated oxygen sensor circuit • Heated oxygen sensor

CONFIRMATION ENGINE RACING PATTERN

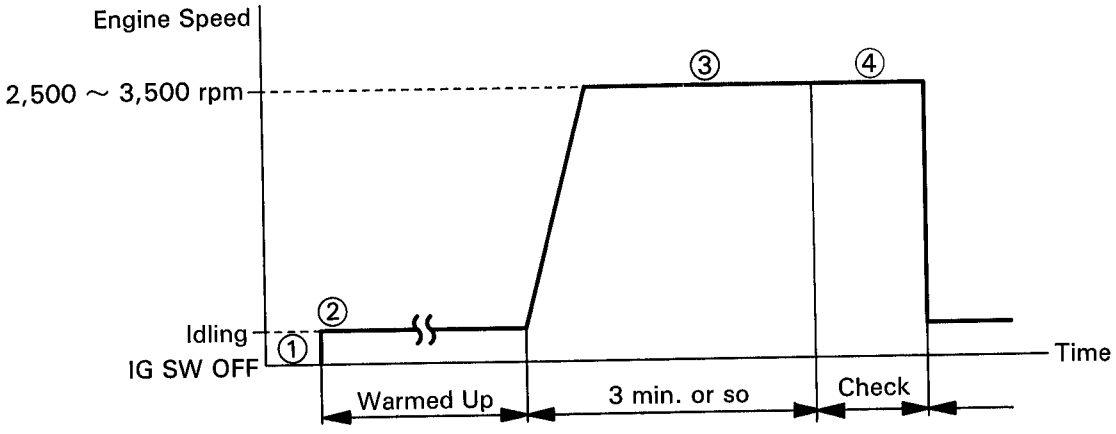

FI7132

① Connect the TOYOTA hand-held tester to the DLC3, or connect the probe of the oscilloscope between terminals OX1, OX2 and E1 of ECM.

② Start engine and warm it up with all accessories switched OFF until water temperature is stable.

③ Race the engine at 2,500 ~ 3,000 rpm for about 3 min.

④ After confirming that the waveforms of the heated oxygen sensor, bank 1 sensor 1 (OX1), oscillate around 0.5 V during feedback to the ECM, check the waveform of the heated oxygen sensor, bank 1 sensor 2 (OX2).

HINT:

OX Signal Waveform (Oscilloscope)

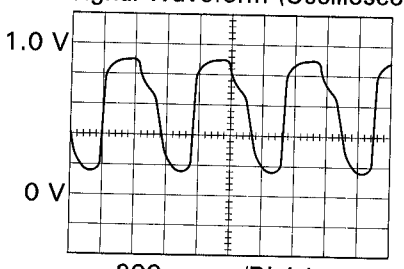

FI6514

If there is a malfunction in the system, the waveform of the heated oxygen sensor, bank 1 sensor 2 (OX2), is almost the same as that of the heated oxygen sensor, bank 1 sensor 1 (OX1), on the left.
There are some cases where, even though a malfunction exists, the MIL may either light up or not light up.

EG

INSPECTION PROCEDURE

1	Are there any other code (besides DTC P0420) being output?

NO

YES → Go to relevant DTC chart.

2	Check heated oxygen sensor (See page EG-235).

OK

NG → Repair or replace.

Replace three-way catalytic converter.

DTC P0440 Evaporative Emission Control System Malfunction (Only for 4WD models)

CIRCUIT DESCRIPTION

The vapor pressure sensor and VSV for vapor pressure sensor are used to detect abnormalities in the evaporative emission control system.
The ECM decides whether there is an abnormality in the evaporative emission control system based on the vapor pressure sensor signal.
DTC P0440 is recorded by the ECM when evaporative emissions leak from the components within the dotted line in fig. 1 below, or when the vapor pressure sensor malfunctions.

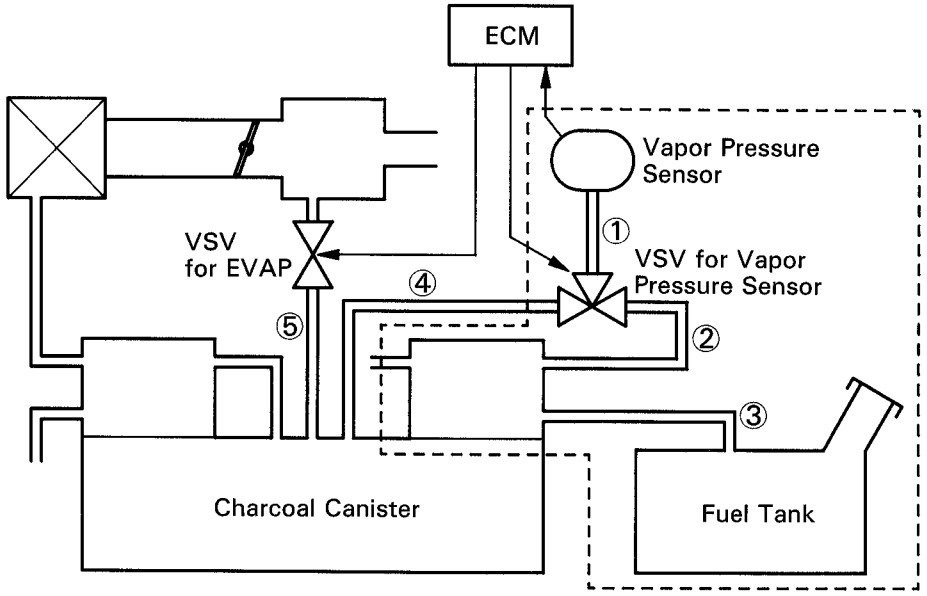

S00043

fig.1

DTC No.	DTC Detecting Condition	Trouble Area
P0440	The fuel tank pressure is atmospheric pressure after the vehicle is driven for 20 min. (2 trip detection logic)	• Vapor pressure sensor • Fuel tank cap incorrectly installed • Fuel tank cap cracked or damaged • Vacuum hose cracked, holed, blocked, damaged, or disconnected (① or ② in fig. 1) • Hose or tube cracked, holed, damaged or loose (③ in fig. 1) • Fuel tank cracked, holed or damaged • Charcoal canister cracked, holed or damaged

WIRING DIAGRAM

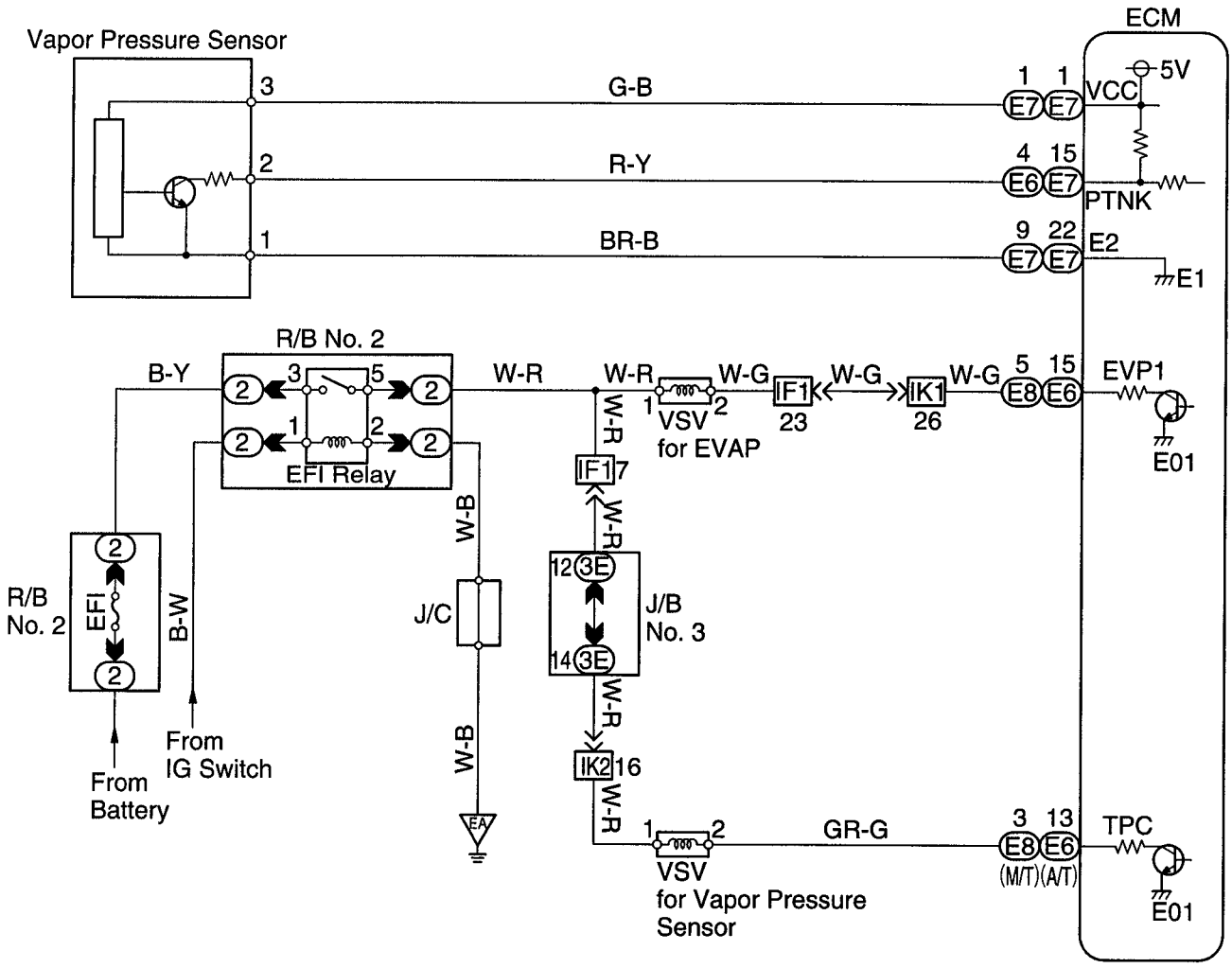

S00288

INSPECTION PROCEDURE

HINT:
- If DTC P0441, P0446 or P0450 is output after DTC P0440, first troubleshoot DTC P0441, P0446 or P0450. If no malfunction is detected, troubleshoot DTC P0440 next.
- Ask the customer whether, after the MIL came on, the customer found the fuel tank cap loose and tightened it. Also ask the customer whether the fuel tank cap was loose when refuelling. If the fuel tank cap was loose, it was the cause of the DTC. If the fuel tank cap was not loose or if the customer was not sure if it was loose, troubleshoot according to the following procedure.

1 **Check whether the hoses close to the fuel tank have been modified, and check whether there are signs of any accident near the fuel tank or charcoal canister.**

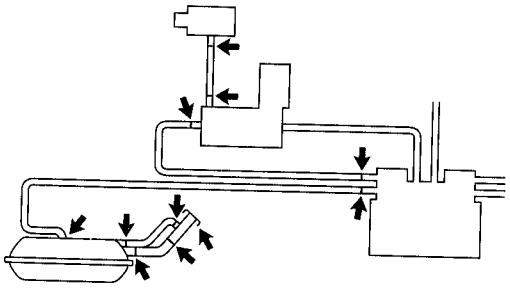

S00024

C Check for cracks, deformation and loose connection of the following parts.

- Fuel tank
- Charcoal canister
- Fuel tank filler pipe
- Hoses and tubes around the fuel tank and charcoal canister

OK

NG → **Repair or replace.**

2 **Check that the fuel tank cap is TOYOTA genuine parts.**

OK

NG → **Replace to TOYOTA genuine parts.**

3 **Check that the fuel tank cap is correctly installed.**

OK

NG → **Correctly install the fuel tank cap.**

4 **Check the fuel tank cap (See page EG-109).**

OK

NG → **Replace fuel tank cap.**

5 **Check the filler neck for damage.**

P Remove the fuel tank cap.

C Visually inspect the filler neck for damage.

OK

NG → **Replace the filler neck.**

EG

6 **Check the vacuum hoses between vapor pressure sensor and VSV for vapor pressure sensor, and VSV for vapor pressure sensor and charcoal canister.**

C (1) Check that the vacuum hose is connected correctly.
(2) Check the vacuum hose for looseness and disconnection.
(3) Check the vacuum hose for cracks, hole and damage.

OK → NG → **Repair or replace.**

7 **Check the hose and tube between fuel tank and charcoal canister.**

C (1) Check for proper connection of the fuel tank and fuel evap pipe (See page EG-135), fuel evap pipe and fuel tube under the floor, fuel tube under the floor and charcoal canister.
(2) Check the hose and tube for cracks, hole and damage.

OK → NG → **Repair or replace.**

8 **Check the charcoal canister for cracks, hole and damage (See page EG-109).**

OK → NG → **Replace charcoal canister.**

9 **Check voltage between terminals VCC and E2 of ECM connector.**

ON

P (1) Remove glove compartment (See page EG-161).
(2) Turn ignition switch ON.

C Measure voltage between terminal VCC and E2 of ECM connector.

OK **Voltage: 4.5 – 5.5 V**

For A/T

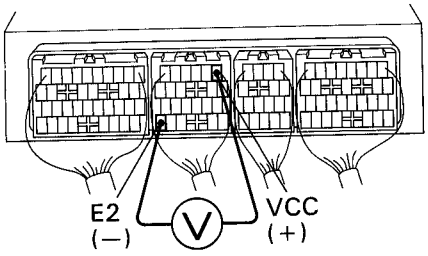

For M/T

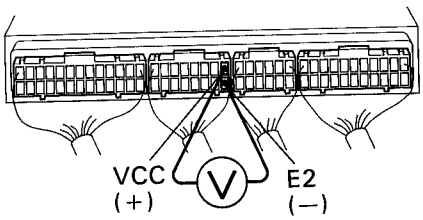

BE6653
P24316
P23813

OK → NG → **Check and replace ECM (See page IN-29).**

10 Check voltage between terminals PTNK and E2 of ECM connector.

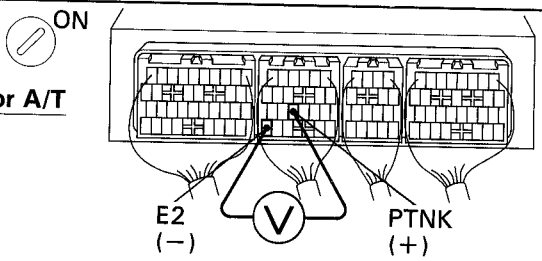

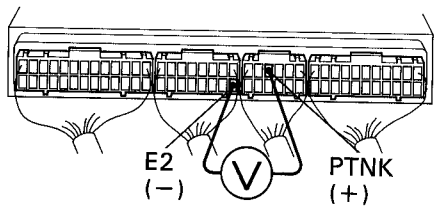

BE6653
P24346
P24347

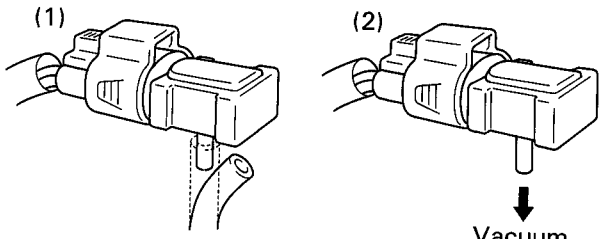

P24976 S00047

P (1) Remove glove compartment (See page EG-161).
(2) Turn ignition switch ON.

C Measure voltage between terminals PTNK and E2 of ECM connector.
(1) Disconnect the vacuum hose from the vapor pressure sensor.
(2) Using the MITYVAC (Hand-Held Vacuum Pump), apply a vacuum to the vapor pressure sensor.

NOTICE: **The vacuum applied to the vapor pressure sensor must be less than 66.7 kPa (500 mmHg, 19.7 in.Hg).**

OK **(1) Voltage: 2.9 – 3.7 V**
(2) Voltage: 0.5 V or less

EG

NG

OK → **Go to step 12 .**

11 Check for open and short in harness and connector between vapor pressure sensor and ECM (See page IN-24).

OK

NG → **Repair or replace harness or connector.**

Replace vapor pressure sensor.

12 Check the fuel tank for cracks and damage.

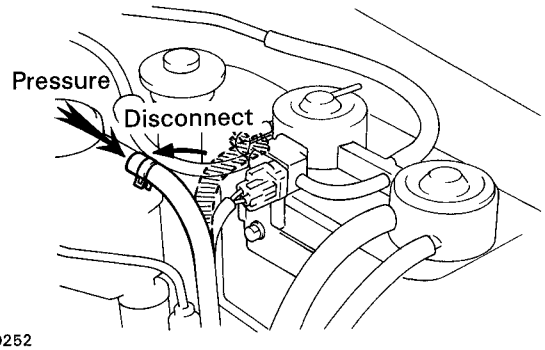

S00252

P (1) Disconnect the vacuum hose from charcoal canister.
(2) Correctly install the fuel tank cap.
(3) Apply a pressure of 5 kPa (50 gf/cm², 0.7 psi) to the fuel tank.

C Check whether the pressure is maintained after 1 minute.

OK **Pressure applied to the fuel tank is maintained.**

OK

NG → **Replace fuel tank.**

It is likely that the vehicle user did not properly close the fuel tank cap. Please explain to the customer how to properly install the fuel tank cap.

DTC P0441 Evaporative Emission Control System Incorrect Purge Flow (For 2WD models)

CIRCUIT DESCRIPTION

To reduce HC emissions, evaporated fuel from the fuel tank is routed through the charcoal canister to the intake manifold for combustion in the cylinders.

The ECM changes the duty signal to VSV for EVAP so that the intake quantity of HC emissions is appropriate for the driving conditions (engine load, engine speed, etc.) after the engine is warmed up.

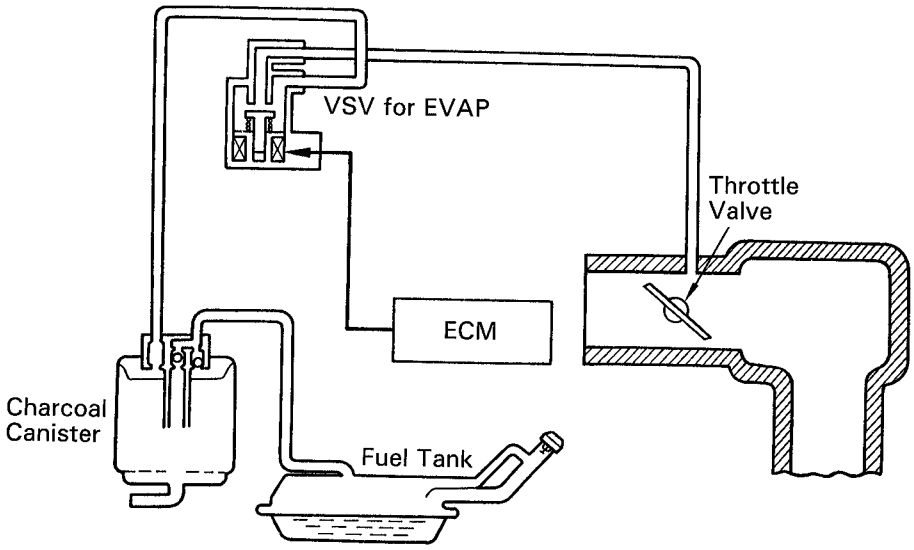

P19894

DTC No.	DTC Detecting Condition	Trouble Area
P0441	The proper response to the computer command does not occur (2 trip detection logic)	• Open or short VSV circuit for EVAP • VSV for EVAP • ECM • Vacuum hose blocked or disconnected • Charcoal canister

WIRING DIAGRAM

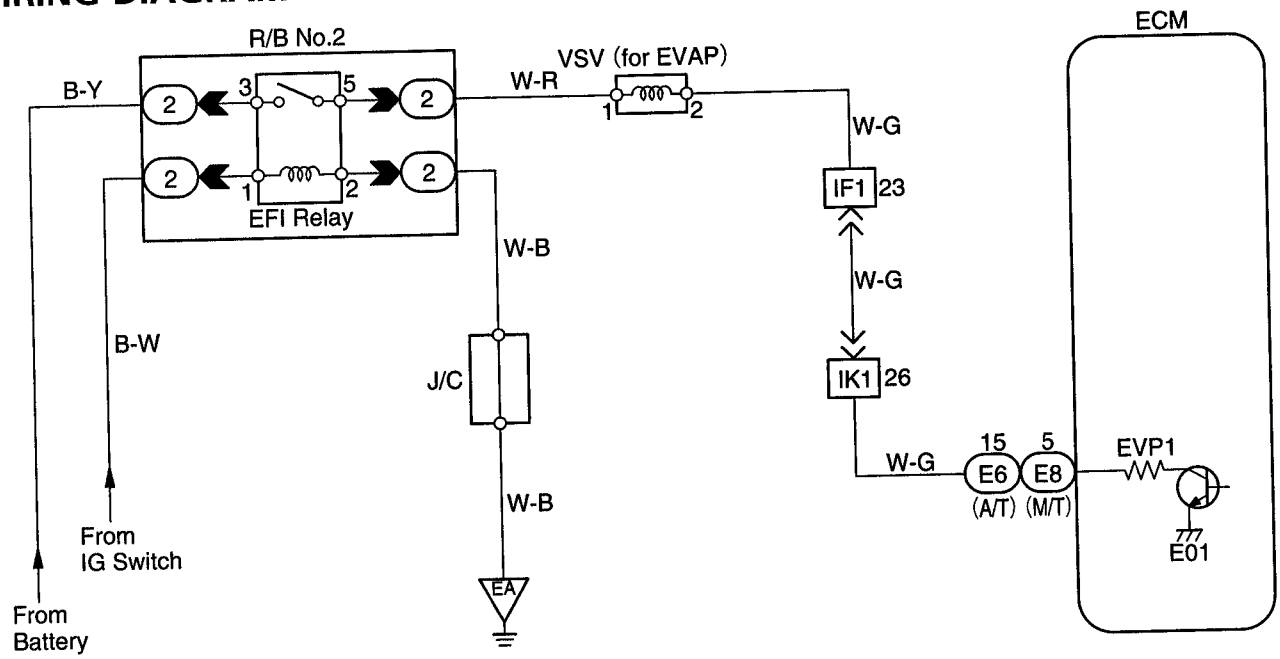

S00012

INSPECTION PROCEDURE

TOYOTA hand-held tester

1 **Connect the TOYOTA hand-held tester and check operation of VSV for EVAP.**

ON

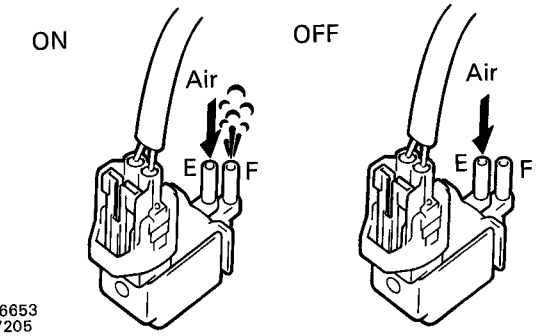

BE6653
FI7205
FI7206

P (1) Connect the TOYOTA hand-held tester to DLC3.
(2) Turn ignition switch ON and push TOYOTA hand-held tester main switch ON.
(3) Select the ACTIVE TEST mode on the TOYOTA hand-held tester.

C Check operation of VSV when VSV is operated by the TOYOTA hand-held tester.

OK **VSV is ON:**
Air from pipe E flows out through pipe F.
VSV is OFF:
Air does not flow from pipe E to pipe F.

NG

OK → **Go to step 4.**

2 **Check VSV for EVAP (See page EG-147).**

OK

NG → **Replace VSV for EVAP.**

3 Check for open and short in harness and connector between EFI relay and ECM (See page IN-24).

OK → Check and replace ECM (See page IN-29).

NG → Repair or replace harness or connector.

4 Check connection of vacuum hose (See page EG-109).

OK → Check and repair charcoal canister (See page EG-109).

NG → Repair or replace.

OBD II scan tool (excluding TOYOTA hand-held tester)

1 Check VSV for purge EVAP (See page EG-147).

OK → **2** Check voltage between terminal EVP1 of ECM connector and body ground.

NG → Replace VSV for EVAP.

ON

For A/T

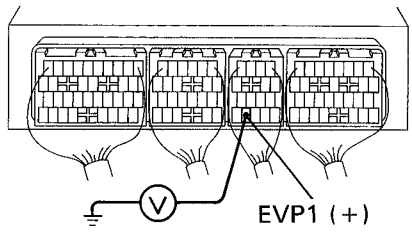

For M/T

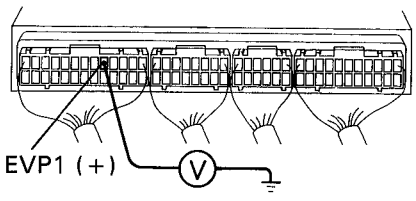

BE6653
P24261
P24263

P (1) Remove glove compartment (See page EG-161).
(2) Turn ignition switch ON.

C Measure voltage between terminal EVP1 of ECM connector and body ground.

OK Voltage: 9 – 14 V

OK → Check and repair harness or connector.

NG → Check and repair harness or connector.

3	Check connection of vacuum hose (See page EG-109).

OK

NG → Repair or replace.

4	Check charcoal canister (See page EG-109).

EG

OK

NG → Repair or replace.

Check and replace ECM (See page IN-29).

DTC	P0441	Evaporative Emission Control System Incorrect Purge Flow (For 4WD models)

DTC	P0446	Evaporative Emission Control System Vent Control Malfunction (Only for 4WD models)

CIRCUIT DESCRIPTION

The vapor pressure sensor and VSV for vapor pressure sensor are used to detect abnormalities in the evaporative emission control system.

The ECM decides whether there is an abnormality in the evaporative emission control system based on the vapor pressure sensor signal.

DTC P0441 and P0446 are recorded by the ECM when evaporative emissions leak from the components within the dotted line in fig. 1 below, or when there is a malfunction in either the VSV for EVAP, the VSV for vapor pressure sensor, or in the vapor pressure sensor itself.

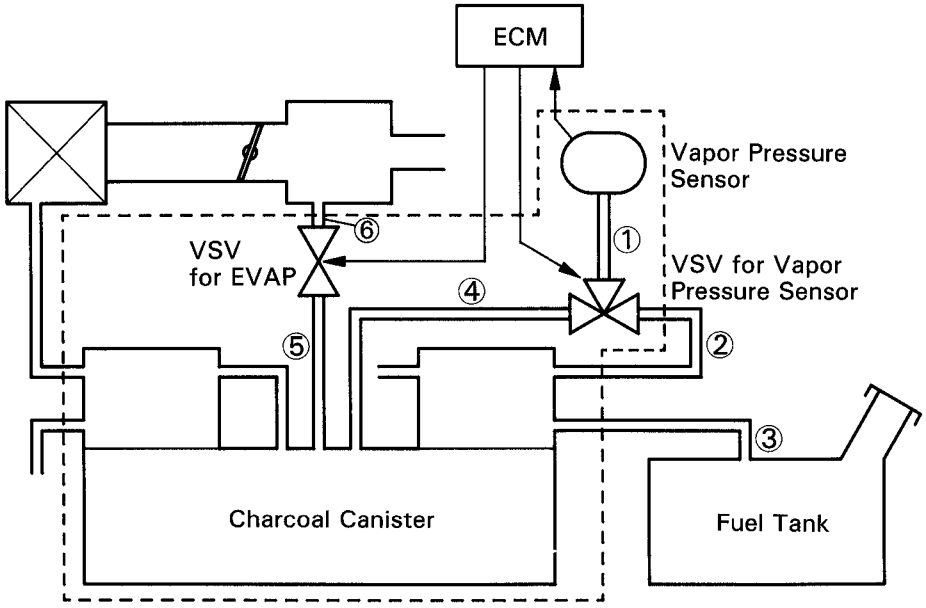

S00044

fig. 1

DTC No.	DTC Detecting Condition	Trouble Area
P0441	The pressure in the charcoal canister does not drop during purge control (2 trip detection logic)	• Open or short in VSV circuit for vapor pressure sensor • VSV for vapor pressure sensor • Open or short in vapor pressure sensor circuit • Vapor pressure sensor • Open or short in VSV circuit for EVAP • VSV for EVAP • Vacuum hose cracks, hole, blocked damaged or disconnected (①, ④, ⑤ and ⑥ in fig. 1) • Charcoal canister cracks, hole or damaged
	During purge cut-off, the pressure in the charcoal canister is very low compared with atmospheric pressure (2 trip detection logic)	
P0446	When VSV for vapor pressure sensor is OFF, ECM judges that there is no continuity between vapor pressure sensor and charcoal canister (2 trip detection logic)	
	When VSV for vapor pressure sensor is ON, ECM judges that there is no continuity between vapor pressure sensor and fuel tank (2 trip detection logic)	
	After the purge cut off operates, the pressure in the charcoal canister is maintained at atmospheric pressure (2 trip detection logic)	

EG

WIRING DIAGRAM

Refer to Evaporative Emission Control System Malfunction on page EG-266.

INSPECTION PROCEDURE

HINT: If DTC P0441, P0446 or P0450 is output after DTC P0440, first troubleshoot DTC P0441, P0446 or P0450. If no malfunction is detected, troubleshoot DTC P0440 next.

TOYOTA hand-held tester

1 Check the VSV connector for EVAP, VSV connector for vapor pressure sensor and vapor pressure sensor connector for looseness and disconnection.

OK → NG: Repair or connect the VSV or sensor connector.

2 Check the vacuum hose between throttle body and VSV for EVAP, VSV for EVAP and charcoal canister, charcoal canister and VSV for vapor pressure sensor, and VSV for vapor pressure sensor and vapor pressure sensor.

C (1) Check that the vacuum hose is connected correctly.
(2) Check the vacuum hose for looseness and disconnection.
(3) Check the vacuum hose for cracks, hole, damage, and blockage.

OK → NG: Repair or replace.

3 Check voltage between terminals VCC and E2 of ECM connector. (See page EG-268, step 9)

OK → NG: Check and replace ECM (See page IN-29).

4 Check voltage between terminals PTNK and E2 of ECM connector. (See page EG-269, step 10)

NG → OK: Go to step 6 .

5 Check for open and short in harness and connector between vapor pressure sensor and ECM (See page IN-24).

OK → NG: Repair or replace harness or connector.

Replace vapor pressure sensor.

EG

6 Check the purge flow.

P (1) Connect the TOYOTA hand-held tester to the DLC3.
(2) Select the ACTIVE TEST mode on the TOYOTA hand-held tester.
(3) Disconnect from the charcoal canister the vacuum hose to the VSV for EVAP.
(4) Start the engine.

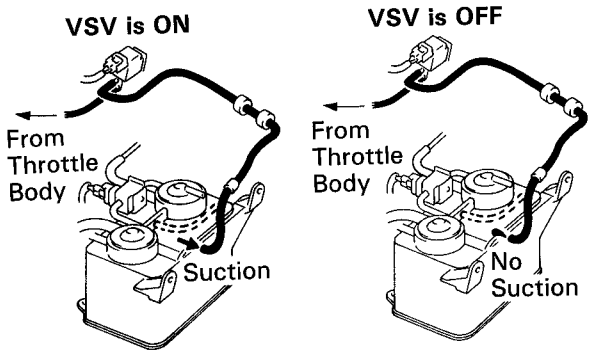

C When the VSV for EVAP is operated by the TOYOTA hand-held tester, check whether the disconnected hose applies suction to your finger.

OK **VSV is ON:**
Disconnected hose applies suction to your finger.
VSV is OFF:
Disconnected hose applies no suction to your finger.

S00015 S00016

NG

OK → **Go to step 10 .**

7 Check the vacuum hose between throttle body and VSV for EVAP, and VSV for EVAP and charcoal canister.

C (1) Check that the vacuum hose is connected correctly.
(2) Check the vacuum hose for looseness and disconnection.
(3) Check the vacuum hose for cracks, hole, damage and blockage.

OK

NG → **Repair or replace.**

8 Check operation of the VSV for EVAP (See page EG-147).

OK

NG → **Replace VSV.**

9 Check for open and short in harness and connector between EFI main-relay and VSV for EVAP and ECM (See page IN-24).

OK

NG → **Repair or replace harness or connector.**

Check and replace ECM (See page IN-29).

10 **Connect the TOYOTA hand-held tester, when VSV connector for vapor pressure sensor is disconnected and VSV for EVAP is ON, measure voltage between terminals PTNK and E2 of ECM connector.**

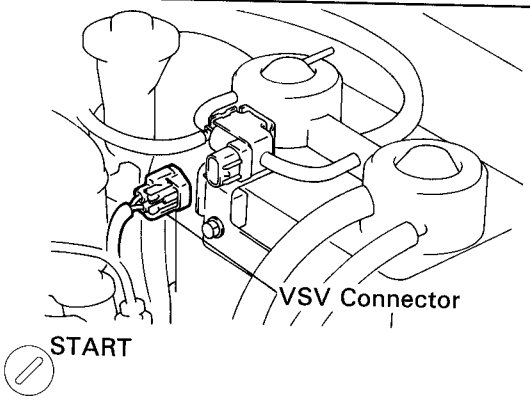

P (1) Connect the TOYOTA hand-held tester to the DLC3.
(2) Disconnect the VSV connector for vapor pressure sensor.
(3) Select the ACTIVE TEST mode on the TOYOTA hand-held tester.
(4) Start the engine.

C Measure voltage between terminals PTNK and E2 of ECM connector, when VSV for EVAP is ON, using the TOYOTA hand-held tester.

OK **Voltage: 2.0 V or less**

For A/T

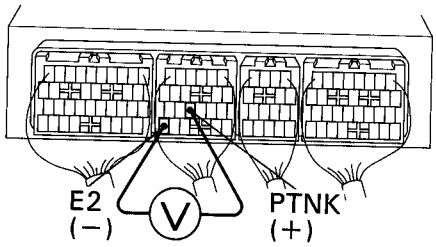

For M/T

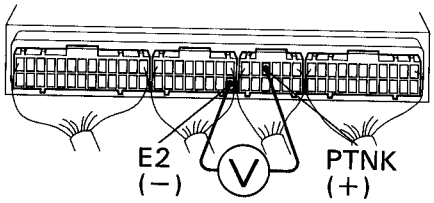

P25798
BE6653
P24346
P24347

NG

OK Go to step 12 .

11 **Check the vacuum hose between charcoal canister and VSV for vapor pressure sensor, and vapor pressure sensor and VSV for vapor pressure sensor.**

C (1) Check that the vacuum hose is connected correctly.
(2) Check the vacuum hose for looseness and disconnection.
(3) Check the vacuum hose for cracks, hole, damage and blockage.

OK

NG Repair or replace.

12 **Check operation of the VSV for vapor pressure sensor (See page EG-150).**

OK

NG Replace VSV.

13 **Check for open and short in harness and connector between EFI relay and VSV for vapor pressure sensor and ECM (See page IN-24).**

OK

NG → **Repair or replace harness or connector.**

14 **Check the charcoal canister.**

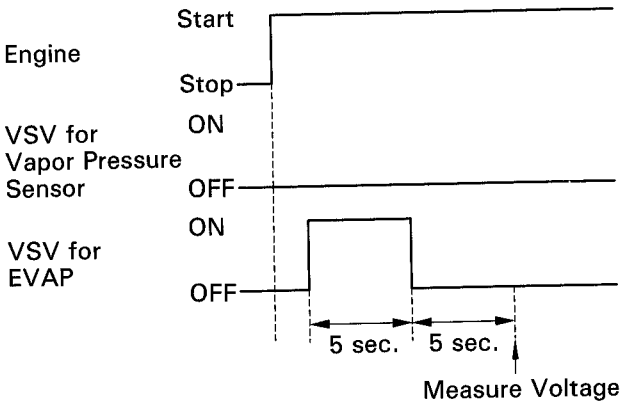

P (1) Connect the TOYOTA hand-held tester to the DLC3.
(2) Remove the fuel tank cap.
(3) Disconnect the VSV connector for vapor pressure sensor.
(4) Select the ACTIVE TEST mode on the TOYOTA hand-held tester.
(5) Start the engine.
(6) VSV for EVAP is ON by TOYOTA hand-held tester and remains on for 5 sec.

C Measure voltage between terminals PTNK and E2 of ECM connector 5 sec. after switching VSV for EVAP from ON to OFF.

OK **Voltage: 2.5 V or less**

For A/T

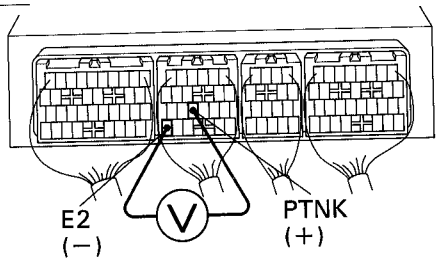

For M/T

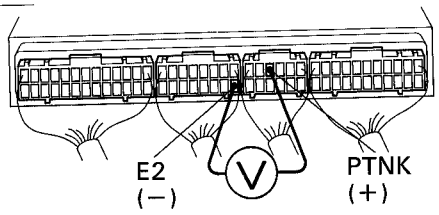

S00049
P24346
P24347

OK

NG → **Replace charcoal canister.**

Check and replace ECM (See page IN-29).

OBD Ⅱ scan tool (excluding TOYOTA hand-held tester)

1 Check the VSV connector for EVAP, VSV connector for vapor pressure sensor and vapor pressure sensor connector for looseness and disconnection.

OK → NG → Repair or connect the VSV or sensor connector.

2 Check the vacuum hose between throttle body and VSV for EVAP, VSV for EVAP and charcoal canister, charcoal canister and VSV for vapor pressure sensor, and VSV for vapor pressure sensor and vapor pressure sensor.

C (1) Check that the vacuum hose is connected correctly.
(2) Check the vacuum hose for looseness and disconnection.
(3) Check the vacuum hose for cracks, hole, damage and blockage.

OK → NG → Repair or replace.

3 Check voltage between terminals VCC and E2 of ECM connector (See page EG-268, step 9).

OK → NG → Check and replace ECM (See page IN-29).

4 Check voltage between terminals PTNK and E2 of ECM connector (See page EG-269, step 10).

NG → OK → Go to step 6 .

5 Check for open and short in harness and connector between vapor pressure sensor and ECM (See page IN-24).

OK → NG → Repair or replace harness or connector.

Replace vapor pressure sensor.

EG

6 **Check the VSV for EVAP.**

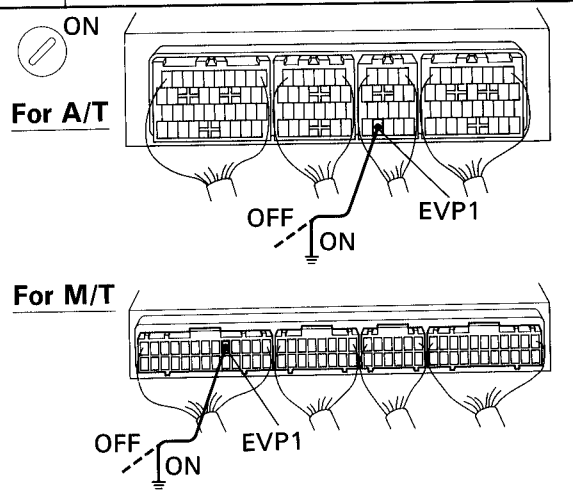

BE6653
P24350
P24351
FI7205 FI7206

VSV is ON VSV is OFF

P (1) Remove glove compartment (See page EG-161).
(2) Turn the ignition switch ON.

C Check VSV function.
(1) Connect beween terminal EVP1 of ECM and body ground.
(2) Disconnect between terminal EVP1 of ECM and body ground.

OK **(1) VSV is ON:**
Air from pipe E is flowing out through pipe F.
(2) VSV is OFF:
Air does not flow from pipe E to pipe F.

NG

OK → **Go to step 9 .**

7 **Check operation of the VSV for EVAP (See page EG-147).**

OK

NG → **Replace VSV.**

8 **Check for open and short in harness and connector between EFI relay and VSV for EVAP and ECM (See page IN-24).**

OK

NG → **Repair or replace harness or connector.**

Check and replace ECM.

9 **Check the VSV for vapor pressure sensor.**

ON

For A/T

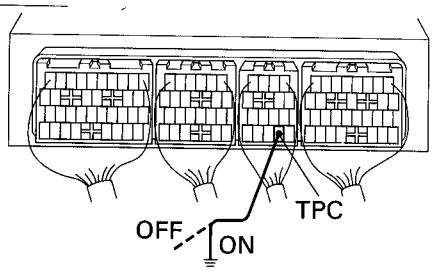

For M/T

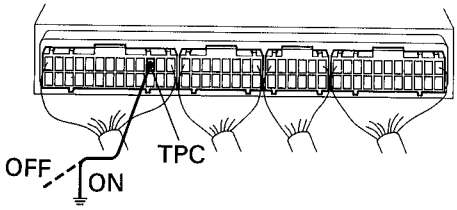

BE6653
P24352
P24353

P (1) Remove glove compartment (See page EG-161).
(2) Turn ignition switch ON.

C Check VSV function
(1) Connect between terminal TPC of ECM and body ground.
(2) Disconnect between terminal TPC of ECM and body ground.

OK **(1) VSV is ON:**
Air from pipe E is flowing out through pipe F.
(2) VSV is OFF:
Air from pipe E is flowing out through pipe G.

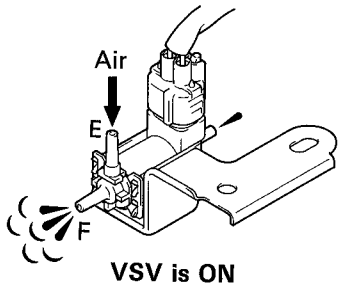

VSV is ON

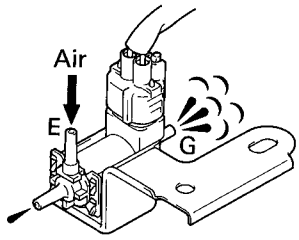

VSV is OFF

P25800 P25801

NG → **OK** → **Check and replace charcoal canister (See page EG-109).**

10 **Check operation of the VSV for vapor pressure sensor (See page EG-150).**

OK → **NG** → **Replace the VSV.**

11 **Check for open and short in harness and connector between EFI relay and VSV for vapor pressure sensor and ECM (See page IN-24).**

OK → **NG** → **Repair or replace harness or connector.**

Check and replace ECM.

DTC P0450 Evaporative Emission Control System Pressure Sensor Malfunction (Only for 4WD models)

CIRCUIT DESCRIPTION

The vapor pressure sensor and VSV for vapor pressure sensor are used to detect abnormalities in the evaporative emission control system.
The ECM decides whether there is an abnormality in the evaporative emission control system based on the vapor pressure sensor signal.
DTC P0450 is recorded by the ECM when the vapor pressure sensor malfunction.

EG

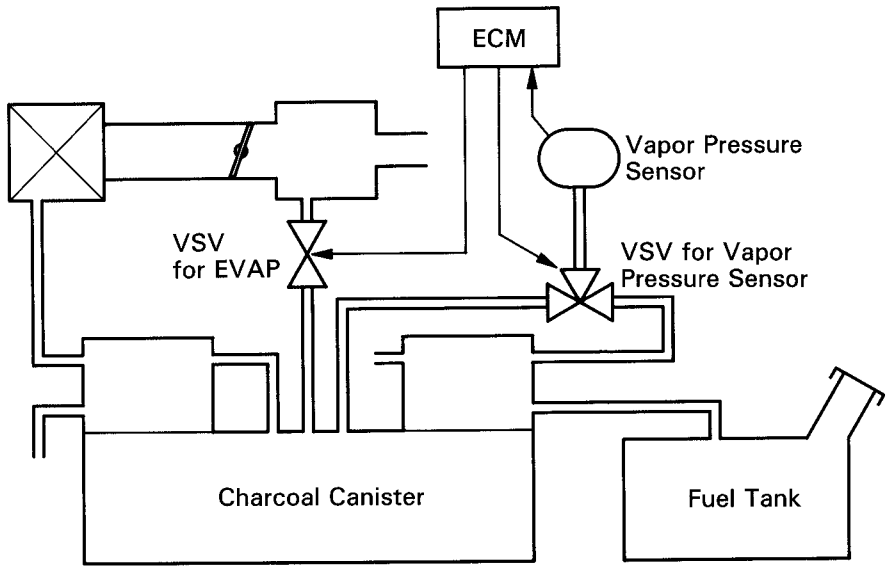

S00042

DTC No.	DTC Detecting Condition	Trouble Area
P0450	Condition (a) or (b) continues. (2 trip detection logic) (a) PTNK < 0.5 V (b) PTNK > 4.5 V	• Open or short in vapor pressure sensor circuit • Vapor pressure sensor • ECM

WIRING DIAGRAM

Refer to Evaporative Emission Control System Malfunction on page EG-266.

INSPECTION PROCEDURE

HINT: If DTC P0441, P0446 or P0450 is output after DTC P0440, first trouble shoot DTC P0441, P0446 or P0450. If no malfunction is detected, troubleshoot DTC P0440 next.

1 Check voltage between terminals VCC and E2 of ECM connector (See page EG-268, step 9).

OK → NG: Check and replace ECM.

2 Check voltage between terminals PTNK and E2 of ECM connector (See page EG-269, step 10).

NG → OK: Check and replace ECM.

3 Check for open and short in harness and connector between the vapor pressure sensor and ECM (See page IN-24).

OK → NG: Repair or replace harness or connector.

Replace the vapor pressure sensor.

DTC P0500 Vehicle Speed Sensor Malfunction

CIRCUIT DESCRIPTION

This sensor is mounted in the combination meter. It contains a magnet which is rotated by the speedometer cable.

Turning the reed switch ON and OFF 4 times for every revolution of the speedometer.

It is then transmitted to the ECM. The ECM determines the vehicle speed based on the frequency of these pulse signals.

EG

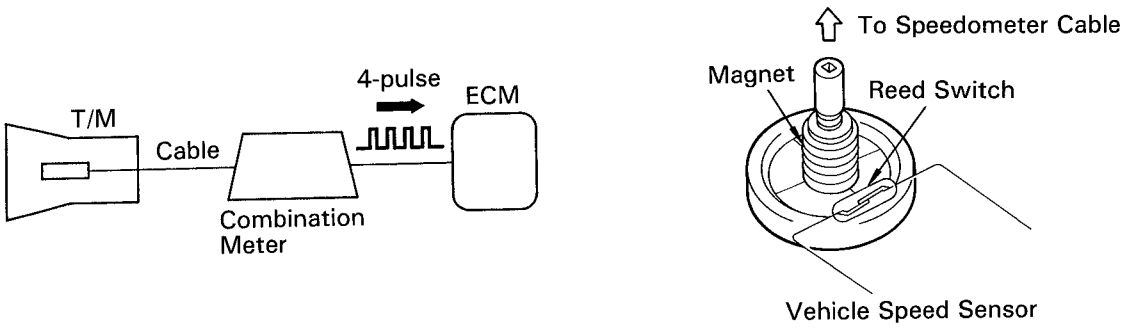

FI7112
FI7166

DTC No.	DTC Detecting Condition	Trouble Area
P0500	No vehicle speed sensor signal to ECM under condition (a): (2 trip detection logic) (a) Vehicle is being driven	• Combination meter • Open or short in speed sensor circuit • ECM • Speedometer cable

WIRING DIAGRAM

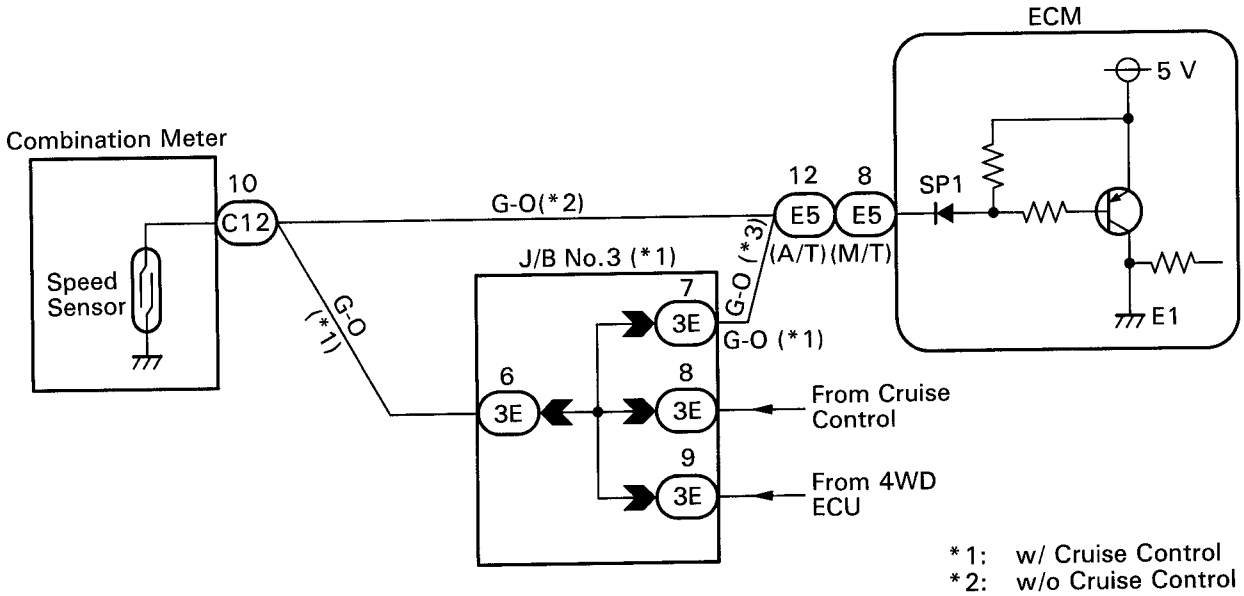

*1: w/ Cruise Control
*2: w/o Cruise Control

P22413

INSPECTION PROCEDURE

1 **Check operation of speedometer.**

C Drive the vehicle and check if the operation of the speedometer in the combination meter is normal.

HINT: The vehicle speed is operating normally if the speedometer display is normal.

OK → **2**

NG → **Check speedometer and cable (See page BE-35).**

2 **Check voltage between terminal SP1 of ECM connector and body ground.**

ON

P (1) Remove glove compartment (See page EG-161).
(2) Disconnect cruise control ECU connector.
(3) Shift the shift lever to neutral.
(4) Jack up a rear wheel on one side.
(5) Turn ignition switch ON.

C Measure voltage between terminal SP1 of ECM connector and body ground when the wheel is turned slowly.

OK **Voltage is generated intermittently.**

For A/T

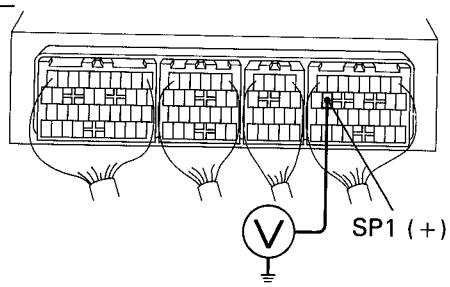

For M/T

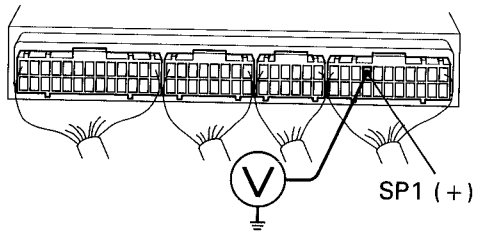

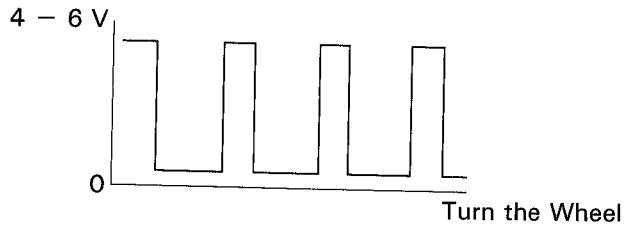

AT7809

BE6653
P24324
P24205

OK → **Check and replace ECM (See page IN-29).**

NG → **Check and repair harness and connector between combination meter and ECM.**

DTC P0505 Idle Control System Malfunction

CIRCUIT DESCRIPTION

The rotary solenoid type IAC valve is located in front of the intake air chamber and intake air bypassing the throttle valve is directed to the IAC valve through a passage.
In this way the intake air volume bypassing the throttle valve is regulated, controlling the engine speed.

The ECM operates only the IAC valve to perform idle-up and provide feedback for the target idling speed and a VSV for idle-up control is also added (for air conditioning).

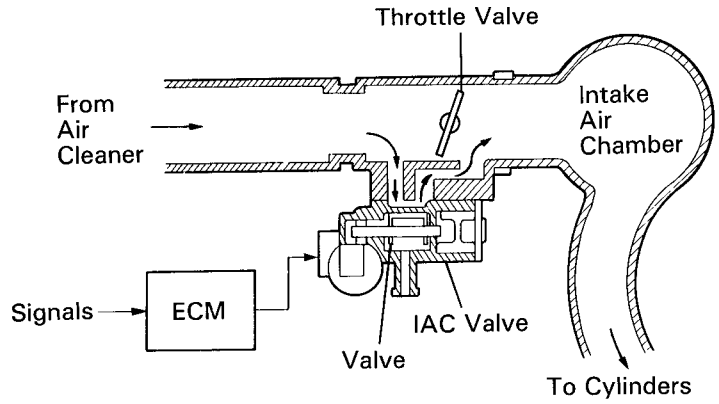

P01559

DTC No.	DTC Detecting Condition	Trouble Area
P0505	Idle speed continues to vary greatly from the target speed (2 trip detection logic)	• IAC valve is stuck or closed • Open or short in IAC valve circuit • VSV for A/C idle-up • Air intake(hose loose)

WIRING DIAGRAM

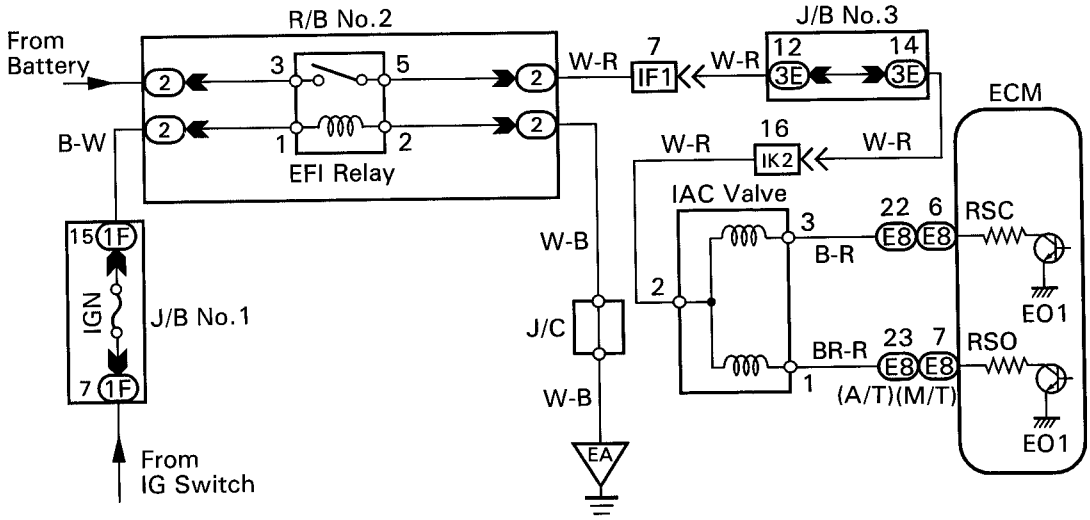

P23437

INSPECTION PROCEDURE

1	Check air induction system (See page EG-117).

OK

NG → Repair or replace.

2 Check VSV for A/C idle up (See page EG-151).

OK

NG → Replair or replace.

3 Check voltage terminals RSO, RSC of ECM connector and body ground.

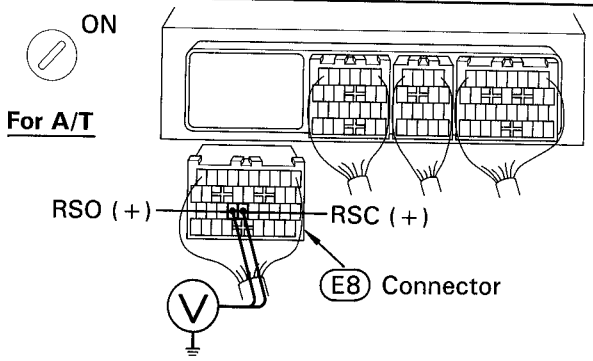

P (1) Remove glove compartment (See page EG-161).
(2) Disconnect the ECM (E8) connector.
(3) Turn ignition switch ON.

C Measure voltage between terminals RSO, RSC of ECM connector and body ground.

OK Voltage: 9 – 14 V

For M/T

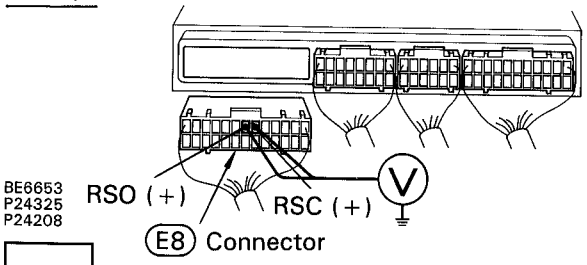

NG

OK → Go to step 5 .

4 Check IAC valve (See page EG-142).

OK

NG → Replace IAC valve.

Check for open and short in harness and connector between R/B No.2 and IAC valve, IAC valve and ECM (See page IN-24).

5 Check operation of the IAC valve (See page EG-145).

OK

NG → Repair or replace IAC valve.

Check and replace ECM (See page IN-29).

EG

DTC P0510 Closed Throttle Position Switch Malfunction

CIRCUIT DESCRIPTION

Refer to Throttle/Pedal Position Sensor/Switch "A" Circuit Malfunction on page EG-229.

DTC No.	DTC Detecting Condition	Trouble Area
P0510	The closed throttle position switch does not turn ON even once when the vehicle is driven (2 trip detection logic)	• Open in closed throttle position switch circuit • Closed throttle position switch • ECM

EG

HINT: After confirming DTC P0510 use the TOYOTA hand-held tester to confirm the closed throttle position switch signal from "CURRENT DATA".

Throttle valve	Closed throttle position Switch Signal	Malfunction
Fully Closed	OFF	Open Circuit
Fully Open	ON	Short Circuit

WIRING DIAGRAM

Refer to page EG-230 for the WIRING DIAGRAM.

INSPECTION PROCEDURE

HINT: If DTC "P0110" (intake air temp. circuit malfunction), "P0115" (engine coolant temp. circuit malfunction) and "P0120" (throttle/pedal position sensor/switch "A" circuit malfunction) are output simultaneously, E2 (sensor ground) may be open.

TOYOTA hand-held tester

1 Check for open in harness or ECM.

ON

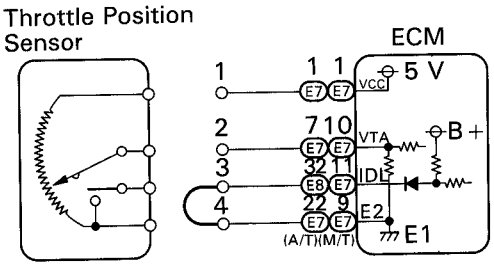

BE6653
P19557

NG

P (1) Connect the TOYOTA hand-held tester to the DLC3.
(2) Disconnect the throttle position sensor connector.
(3) Connect sensor wire harness terminals between terminals 3 and 4.
(4) Turn ignition switch ON.

C Read CTP switch signal on the TOYOTA hand-held tester.

OK **CTP switch signal: ON**

OK → **Confirm good connection at sensor. If OK, replace throttle position sensor.**

2 Check for open in harness or ECM.

ON

Throttle Position Sensor

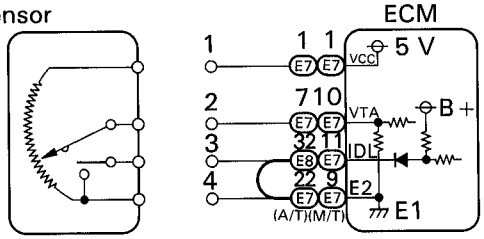

For A/T

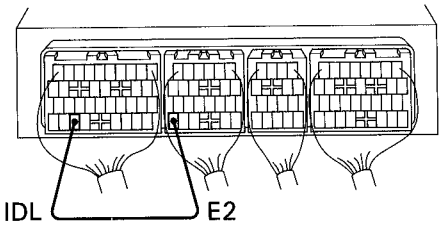

For M/T

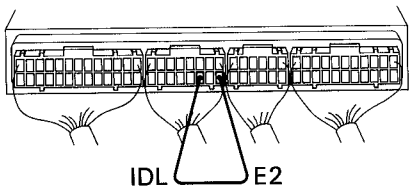

BE6653
P19556
P20210
P20234

P (1) Remove glove compartment (See page EG-161).
(2) Connect between termianls IDL and E2 of ECM connectors.

HINT: Throttle position sensor connector is disconnected. Before checking, do a visual check and contact pressure check for the connector (See page EG-206).

(3) Turn ignition switch ON.

C Read CTP switch signal on the TOYOTA hand-held tester.

OK **CTP switch signal: ON**

NG

OK → **Open in harness between ECM and throttle position sensor, repair or replace harness.**

Confirm connection at ECM. If OK, replace ECM.

OBD II scan tool (excluding TOYOTA hand-held tester)

1 Check for open in harness or ECM.

Throttle Position Sensor

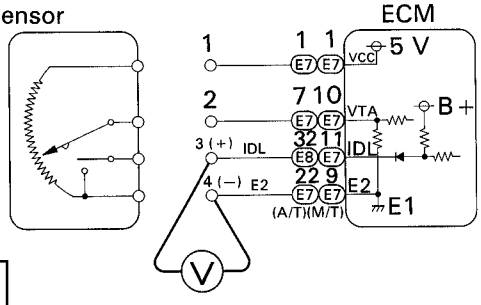

P24209

P (1) Disconnect the throttle position sensor connector.
(2) Turn ignition switch ON.

C Measure voltage between terminals 3 and 4 of throttle position sensor connector.

OK **Voltage: 9 — 14 V**

NG

OK → **Confirm good connection at sensor. If OK, replace throttle position sensor.**

2	Check for open in harness and connector between throttle position sensor and ECM (See page IN-24).

OK

NG → Open in harness between ECM and throttle position sensor.

Confirm connection at ECM. If OK, replace ECM.

EG

DTC P1300 Igniter Circuit Malfunction

CIRCUIT DESCRIPTION

A DIS (Direct Ignition System) has been adopted. The DIS improves the ignition timing accuracy, reduces high-voltage loss, and enhances the overall reliability of the ignition system by eliminating the distributor.

The DIS is a 2-cylinder simultaneous ignition system which ignites 2 cylinders simultaneously with one ignition coil. In the 2-cylinder simultaneous ignition system, each of the 2 spark plugs is connected to the end of the secondary winding. High voltage generated in the secondary winding is applied directly to the 2 spark plugs. The sparks of the 2 spark plugs pass simultaneously from the center electrode to the ground electrode.

The ECM determines ignition timing and outputs the ignition signals (IGT) for each cylinder. Based on IGT signals, the igniter controls the primary ignition signals (IGC) for all ignition coils. At the same time, the igniter also sends an ignition confirmation signal (IGF) as a fail-safe measure to the ECM.

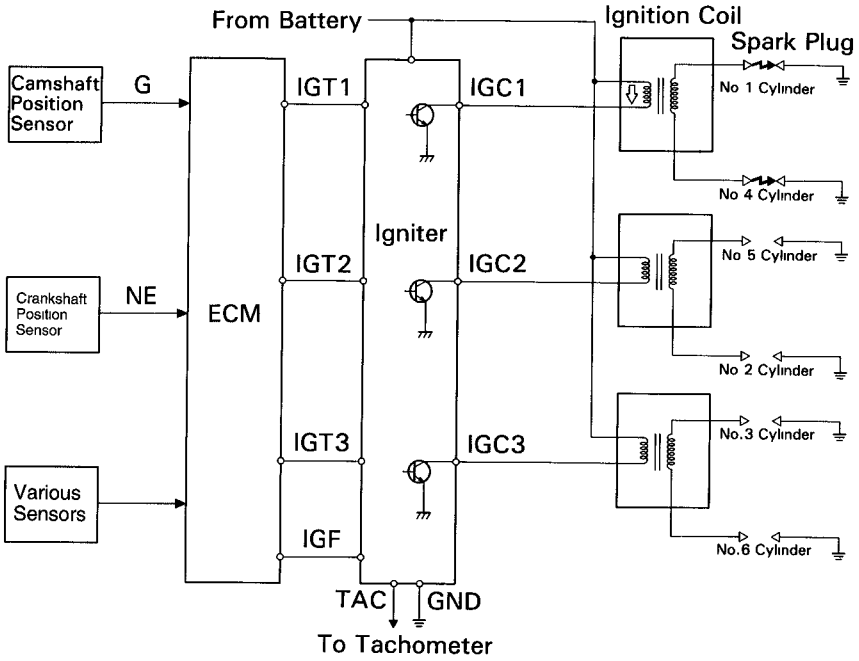

S00251

DTC No.	DTC Detecting Condition	Trouble Area
P1300	No IGF signal to ECM for 6 consecutive IGT signals during engine running	• Open or short in IGF or IGT circuit from igniter to ECM • Igniter • ECM

WIRING DIAGRAM

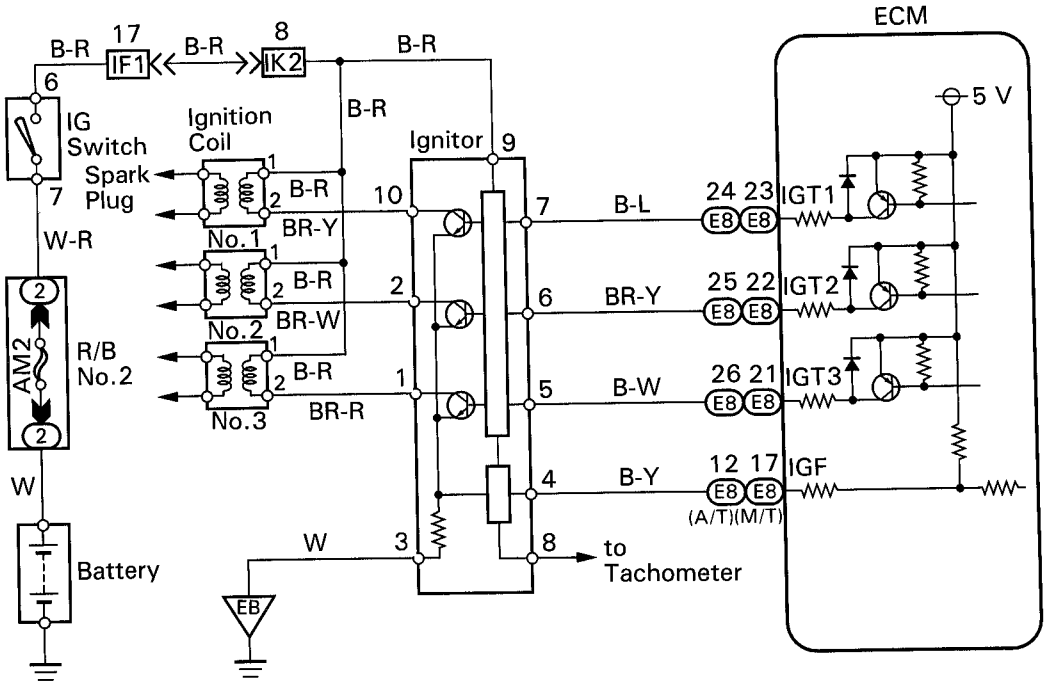

P23438

INSPECTION PROCEDURE

1	Check for spark (See page IG-14).

OK → NG: Go to step 4 .

2	Check for open and short in harness and connector in IGF signal circuit between ECM and igniter (See page IN-24).

OK → NG: Repair or replace harness or connector.

3 **Disconnect igniter connector and check voltage between terminal IGF of ECM connector and body ground.**

ON

For A/T

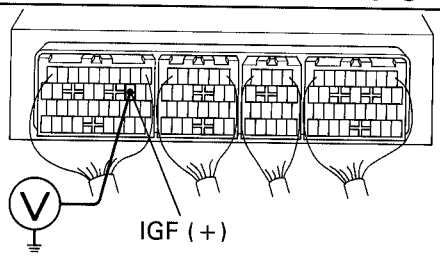

For M/T

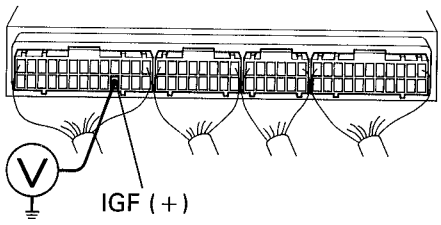

BE6653
P24326
P24211

P (1) Disconnect igniter connector.
(2) Remove glove compartment (See page EG-161).
(3) Turn ignition switch ON.

C Measure voltage between terminal IGF of ECM connector and body ground.

OK **Voltage: 4.5 – 5.5 V**

NG → **Check and replace ECM (See page IN-29).**

OK → **Replace igniter.**

4 **Check for open and short in harness and connector in IGT1~3 signal circuit between ECM and igniter (See page IN-24).**

OK

NG → **Repair or replace harness or connector.**

5 **Check voltage between terminals IGT1~3 of ECM connector and body ground.**

START

For A/T

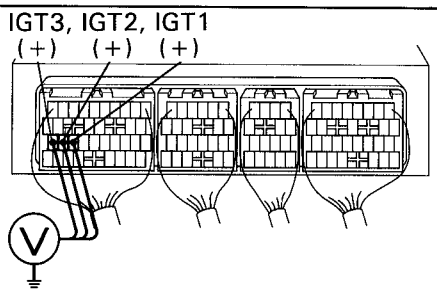

For M/T

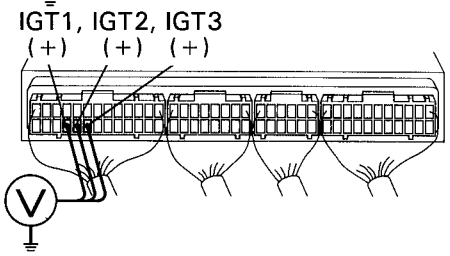

BE6653
P24327
P24328

P Remove glove compartment (See page EG-161).

C Measure voltage between terminals IGT1~3 of ECM connector and body ground when engine is cranked.

OK **Voltage: More than 0.1 V and less than 4.5 V**

EG

Reference INSPECTION USING OSCILLOSCOPE

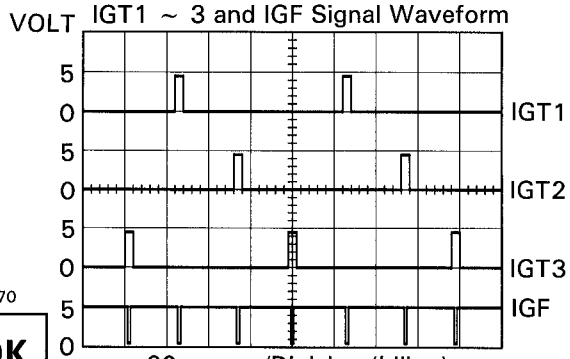

P20870

OK

- During idling, check waveform between terminals IGT1~3, IGF and E1 of ECM.

HINT: THe correct waveforms are as shown.

NG **Check and replace ECM (See page IN-29).**

6 **Disconnect igniter connector and check voltage between terminals IGT1~3 of ECM connector and body ground.**

START

For A/T

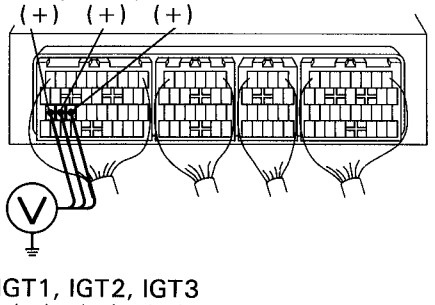

For M/T

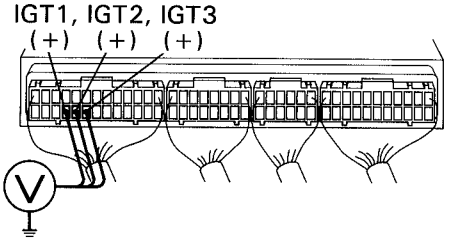

BE6653
P24327
P24328

OK

P (1) Disconnect igniter connector.
(2) Remove glove compartment (See page EG-161).

C Measure voltage between terminals IGT1~3 of ECM connector and body ground when engine is cranked.

OK **Voltage: More than 0.1 V and less than 4.5 V**

NG **Check and replace ECM (See page IN-29).**

7 **Check voltage between terminal 9 of igniter connector and body ground.**

ON → START

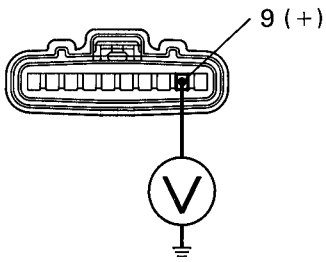

BE6653
P24329

P Disconnect igniter connector.

C Measure voltage between terminal 9 of igniter connector and body ground, when ignition switch is turned to "ON" and "START" position.

OK **Voltage: 9 – 14 V**

OK → **NG** → **Check and repair igniter power source circuit.**

EG

8 **Check for open and short in harness and connector between ignition switch and ignition coil, ignition coil and igniter (See page IN-24).**

OK → **NG** → **Repair or replace harness or connector.**

9 **Check ignition coil (See page IG-18).**

OK → **NG** → **Replace ignition coil.**

Replace igniter.

DTC P1335 Crankshaft Position Sensor Circuit Malfunction (during engine running)

CIRCUIT DESCRIPTION

Refer to Crankshaft Position Sensor "A" Circuit Malfunction on page EG-248.

DTC No.	DTC Detecting Condition	Trouble Area
P1335	No crankshaft position sensor signal to ECM with engine speed 1,000 rpm or more	• Open or short in crankshaft position sensor circuit • Crankshaft position sensor • Starter • ECM

See DTC P0335 for WIRING DIAGRAM and INSPECTION PROCEDURE.

DTC P1500 Starter Signal Circuit Malfunction

CIRCUIT DESCRIPTION

When the engine is cranked, the intake air flow is slow, so fuel vaporization is poor. A rich mixture is therefore necessary in order to achieve good startability. While the engine is being cranked, the battery positive voltage is applied to terminal STA of the ECM. The starter signal is mainly used to increase the fuel injection volume for the starting injection control and after-start injection control.

DTC No.	DTC Detecting Condition	Trouble Area
P1500	No starter signal to ECM	• Open or short in starter signal circuit • Open or short in ignition switch or starter relay circuit • ECM

HINT: In this circuit, diagnosis can only be made in the check mode.

WIRING DIAGRAM

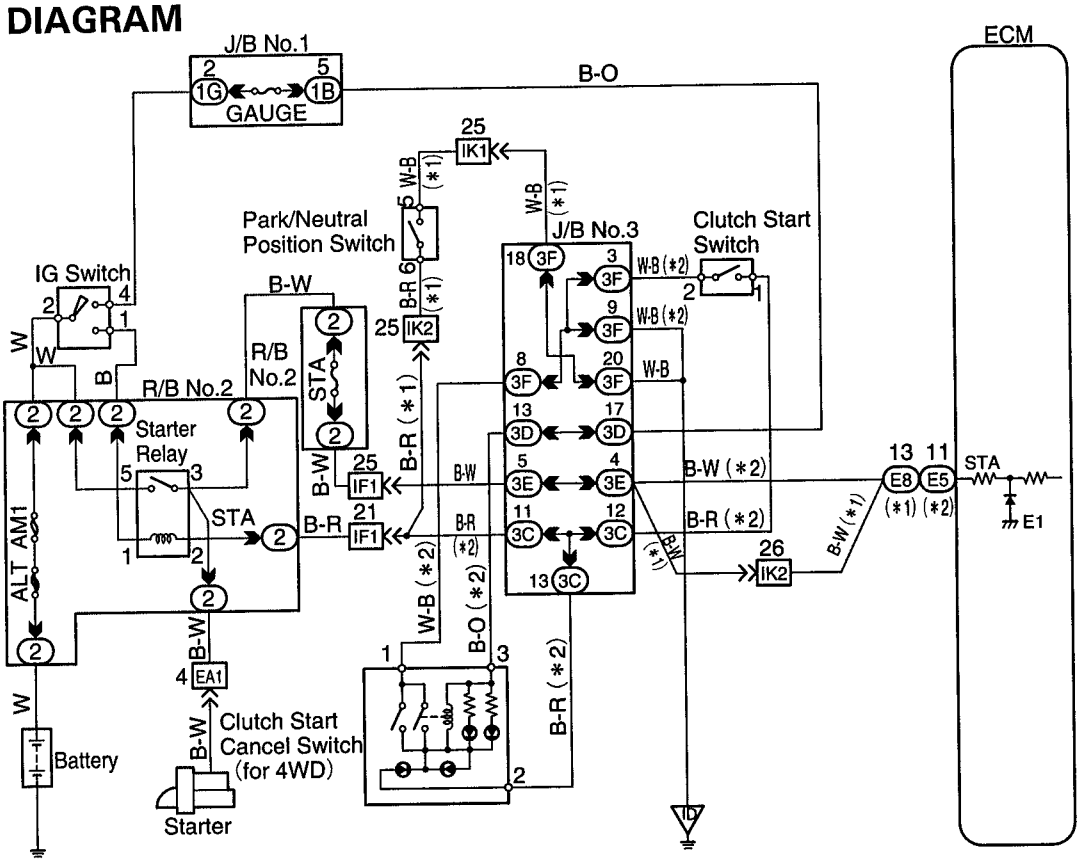

*1 : A/T
*2 : M/T

S00302

INSPECTION PROCEDURE

HINT: This diagnostic chart is based on the premise that the engine is cranked normally. If the engine is not cranked, proceed to the matrix chart of problem symptoms on page EG-217.

1 **Connect the TOYOTA hand-held tester and check STA signal.**

P (1) Connect the TOYOTA hand-held tester to the DLC3.
(2) Turn ignition switch ON and push TOYOTA hand-held tester main switch ON.

C Read STA signal on the TOYOTA hand-held tester while starter operates.

OK

Ignition switch position	ON	START
STA Signal	OFF	ON

NG

OK **Proceed to next circuit inspection shown on matrix chart (See page EG-217).**

2	Check for open in harness and connector between ECM and starter relay (See page IN-24).

OK → Check and replace ECM (See page IN-29).

NG → Repair or replace harness or connector.

DTC P1600 ECM BATT Malfunction

EG

CIRCUIT DESCRIPTION

Battery positive voltage is supplied to terminal BATT of the ECM even when the ignition switch is OFF for use by the DTC memory and air-fuel ratio adaptive control value memory, etc.

DTC No.	DTC Detecting Condition	Trouble Area
P1600	Open in back up power source circuit	• Open in back up power source circuit • ECM

HINT: If DTC P1600 appear, the ECM does not store another DTC.

WIRING DIAGRAM

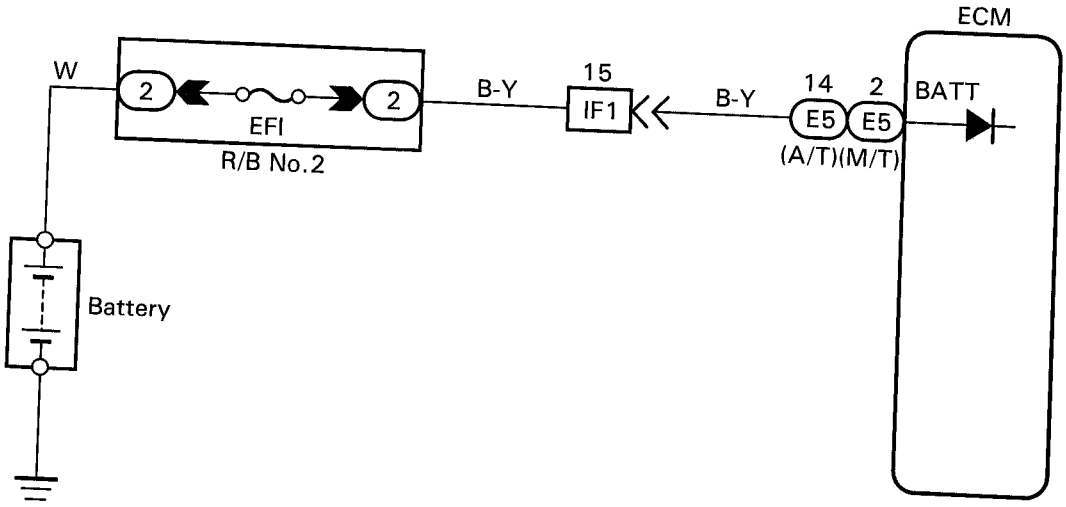

P23417

INSPECTION PROCEDURE

1 **Check voltage between terminal BATT of ECM connector and body ground.**

LOCK

For A/T

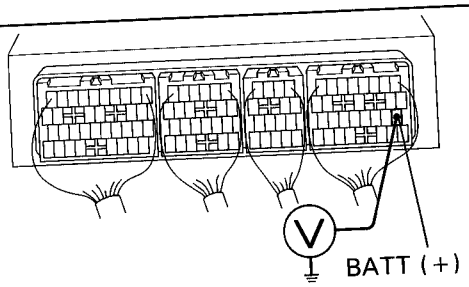

P Remove glove compartment (See page EG-161).

C Measure voltage between terminal BATT of ECM connector and body ground.

OK **Voltage: 9 – 14 V**

EG

For M/T

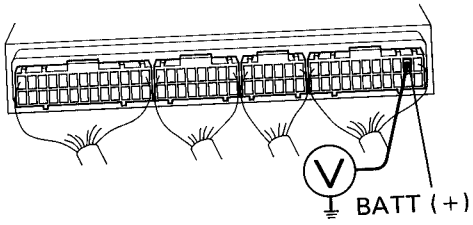

BE6653
P24330
P24217

NG

OK → **Check and replace ECM (See page IN-29).**

2 **Check EFI fuse.**

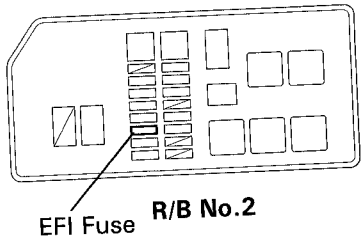

P23367

P Remove EFI fuse from R/B No.2.

C Check continuity of EFI fuse.

OK **Continuity**

OK

NG → **Check for short in all the harness and components connected to EFI fuse.**

Check and repair harness or connector between battery, EFI fuse and ECM.

DTC P1605 Knock Control CPU Malfunction

CIRCUIT DESCRIPTION

Refer to Knock Sensor 1, 2 Circuit Malfunction on page EG-246.

DTC No.	DTC Detecting Condition	Trouble Area
P1605	Engine control computer malfunction (for knock control)	• ECM

WIRING DIAGRAM

Refer to page EG-246 for the WIRING DIAGRAM.

INSPECTION PROCEDURE

1	Are there any other codes (besides DTC P1605) being output?

NO

YES → Go to relevant DTC chart.

Check and replace ECM (See page IN-29).

DTC P1780 Park/Neutral Position Switch Malfunction

CIRCUIT DESCRIPTION

The park/neutral position switch goes on when the shift lever is in the N or P shift position. When it goes on terminal NSW of the ECM is grounded to body ground via the starter relay, thus the terminal NSW voltage becomes 0 V. When the shift lever is in the D, 2, L or R position, the park/neutral position switch goes off, so the voltage of ECM, terminal NSW becomes battery voltage, the voltage of the ECM internal power source.

If the shift lever is moved from the N position to the D position, this signal is used for air-fuel ratio correction and for idle speed control (estimated control), etc.

DTC No.	DTC Detecting Condition	Trouble Area
P1780	Two or more switches are ON simultaneously for "N", "2" and "L" position (2 trip detection logic)	• Short in park/neutral position switch circuit • Park/neutral position switch • ECM
	When driving under conditions (a) and (b) for 30 sec. or more the park/neutral position switch is ON (N position): (2 trip detection logic) (a) Vehicle speed: 70 km/h (44 mph) or more (b) Engine speed: 1,500 ~ 2,500 rpm	

HINT: After confirming DTC P1780 use the TOYOTA hand-held tester to confirm the PNP switch signal from "CURRENT DATA".

WIRING DIAGRAM

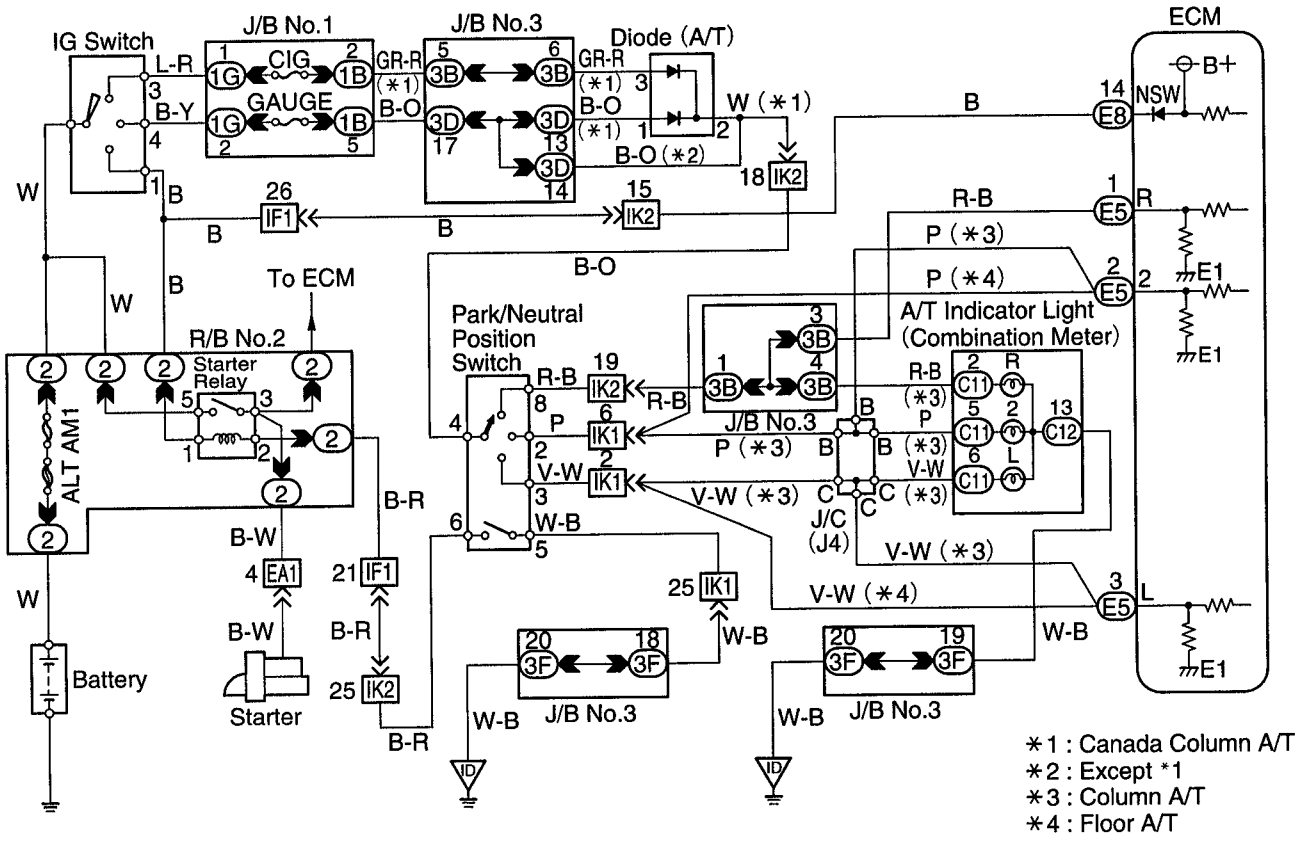

S00011

INSPECTION PROCEDURE

1 **Check park/neutral position switch.**

P Disconnect park/neutral position switch connector.

C Check continuity between each terminal shown below when the shift lever is positioned to each range.

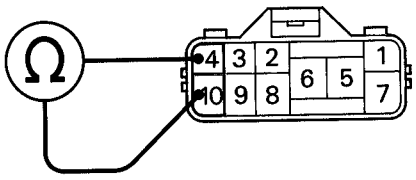

○—○ Continuity

OK

Shift Position \ Terminal	6	5	4	7	8	10	9	2	3
P	○	○	○	○					
R			○		○				
N	○	○	○			○			
D			○				○		
2			○					○	
L			○						○

P24214

OK

NG **Replace park/neutral position switch.**

2 **Check voltage between terminal NSW of ECM connector and body ground.**

ON

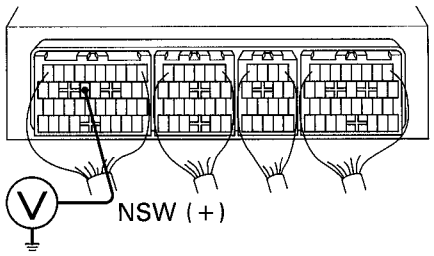

BE6653
P24331

P Remove glove compartment (See page EG-161).

C (1) Turn ignition switch ON.
(2) Measure voltage between terminal NSW of ECM connector and body ground when the shift lever is positioned to the following positions.

OK

Shift lever position	P ro N	L, 2, D or R
Voltage	0 V	9 – 14 V

EG

NG

OK **Check and replace ECM (See page IN-29).**

Check for open and short in harness and connector between ECM and park/neutral position switch (See page IN-24).

ECM Power Source Circuit

CIRCUIT DESCRIPTION

When the ignition switch is turned ON, battery positive voltage is applied to the coil, closing the contacts of the EFI main relay and supplying power to the terminal +B of the ECM.

WIRING DIAGRAM

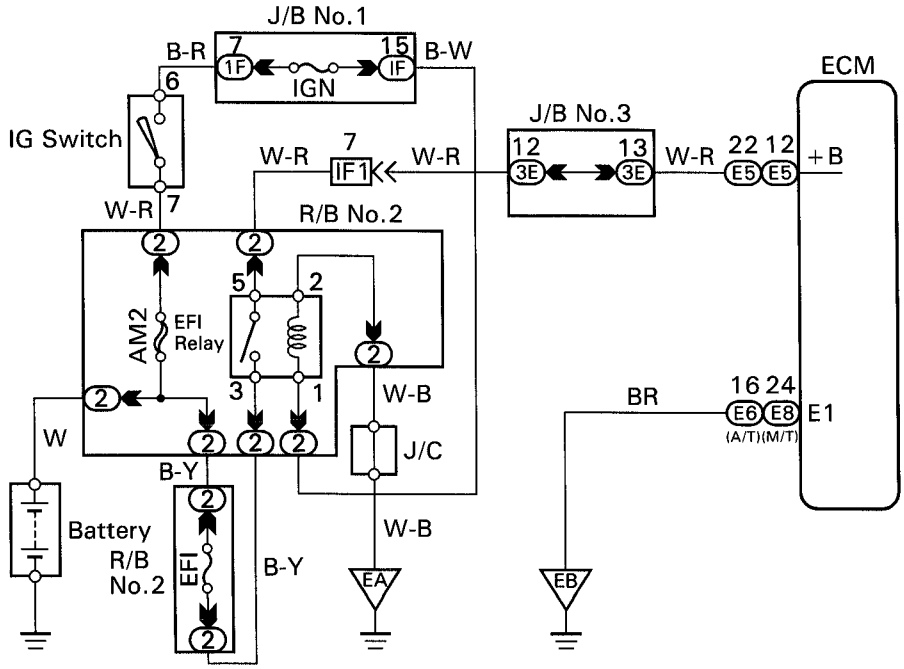

P23439

INSPECTION PROCEDURE

1 Check voltage between terminals +B and E1 of ECM connector.

ON

For A/T

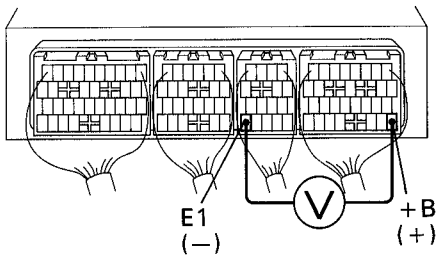

For M/T

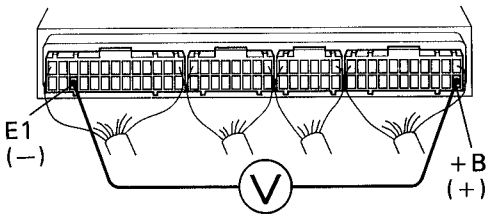

BE6653
P24332
P24221

P (1) Remove glove compartment (See page EG-161).
(2) Turn ignition switch ON.

C Measure voltage between terminals +B and E1 of ECM connector.

OK Voltage: 9 – 14 V

NG

OK → Proceed to next circuit inspection shown on matrix chart (See page EG-217).

2 Check for open in harness and connector between terminal E1 of ECM and body ground (See page IN-24).

OK

NG → Repair or replace harness or connector.

3 Check EFI relay (See page EG-145).

OK

NG → Replace EFI relay.

4 Check EFI fuse (See page EG-300, step 2).

OK

NG → Check for short in all the harness and components connected to EFI fuse.

5 Check for open in harness and connector between EFI relay and battery, EFI relay and ECM (See page IN-24).

OK

NG → Repair or replace harness or connetor.

6 **Check IGN fuse.**

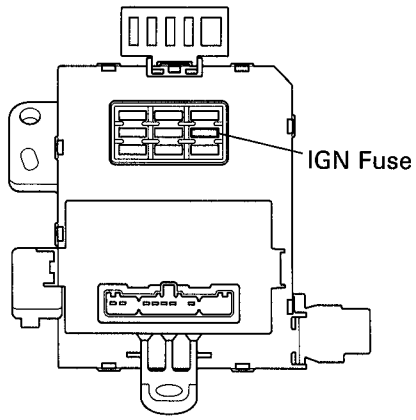

P23368

P Remove IGN fuse from J/B No.1.

C Check continuity of IGN fuse.

OK **Continuity**

OK

NG **Check for short in all the harness and components connected to IGN fuse.**

7 **Check ignition switch (See page BE-4).**

OK

NG **Replace ignition switch.**

Check for open in harness and connector between IG switch and EFI relay, EFI relay and body ground (See page IN-24).

A/C Idle-up Circuit

CIRCUIT DESCRIPTION

When the air conditioning operates (increased engine load), this circuit switches the VSV ON and increases the amount of bypass air to increase the idle speed, thus maintaining driveability.

WIRING DIAGRAM

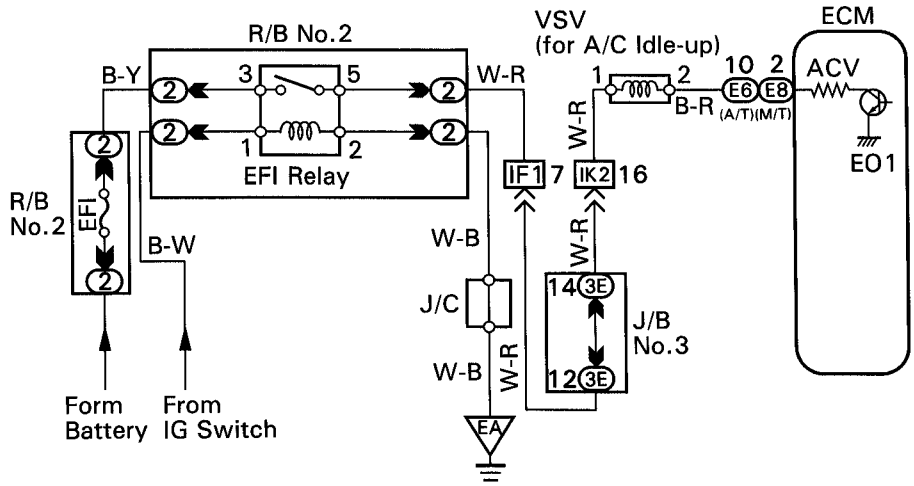

P23441

INSPECTION PROCEDURE

TOYOTA hand-held tester

1	Connect the TOYOTA hand-held tester and check operation of VSV for A/C idle-up.

ON

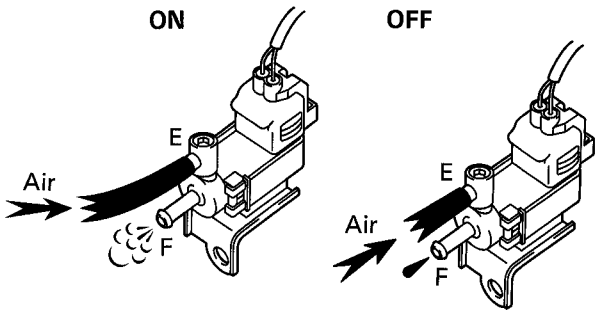

BE6653
P21169
P21170

P (1) Connect the TOYOTA hand-held tester to the DLC3.
(2) Turn ignition switch ON and push TOYOTA hand-held tester main switch ON.
(3) Select the ACTIVE TEST mode on the TOYOTA hand-held tester.

C Check operation of VSV when VSV is operated by the TOYOTA hand-held tester.

OK **VSV is ON:**
Air from pipe E is flowing out through pipe F.
VSV is OFF:
Air does not flow from pipe E to pipe F.

NG → **OK**: Check and repair air hose and air pipe (See page EG-151).

2	Check VSV for A/C idle-up (See page EG-152).

OK → Check and replace ECM (See page IN-29).

NG: Replace VSV for A/C idle-up.

3	Check for open and short in harness and connector between EFI relay and ECM (See page IN-24).

OK → Check and replace ECM (See page IN-29).

NG: Repair or replace harness or connector.

OBD II scan tool (excluding TOYOTA hand-held tester)

1	Check VSV for A/C idle-up (See page EG-152).

OK → Check and replace ECM (See page IN-29).

NG: Replace VSV for A/C idle-up.

2 **Check voltage between terminal ACV of ECM connector and body ground.**

ON

For A/T

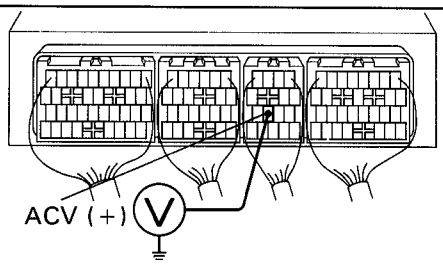

For M/T

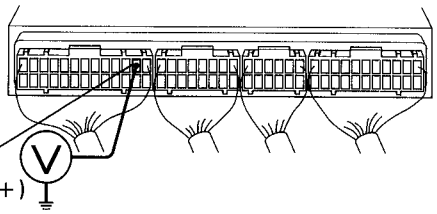

BE6653
P24333
P24334

P (1) Remove glove compartment (See page EG-161).
(2) Turn ignition switch ON.

C Measure voltage between terminal ACV of ECM connector and body ground.

OK **Voltage: 9 – 14 V**

OK

NG **Check for open and short in harness and connector between EFI relay and ECM (See page IN-24).**

3 **Check air hose and air pipe (See page EG-151).**

OK

NG **Repair or replace.**

Check and replace ECM (See page IN-29).

EG

Fuel Pump Control Circuit

CIRCUIT DESCRIPTION

Fuel pump control

The fuel pump is switched on (low voltage at terminal FC) when STA is on or while the NE signal is input to the ECM.

In the diagram below, when the engine is cranked, current flows from terminal ST of the ignition switch to the starter relay coil, the starter relay switches on and current flows to coil L1 of the circuit opening relay. Thus the circuit opening relay switches on, power is supplied to the fuel pump and the fuel pump operates.

EG

When the STA signal and NE signal are input to the ECM, Tr is turned ON, current flows to coil L2 of the circuit opening relay, the relay switches on and the fuel pump operates.

While the NE signal is generated (engine running), the ECM keeps Tr ON (circuit opening relay ON) and the fuel also keeps operating.

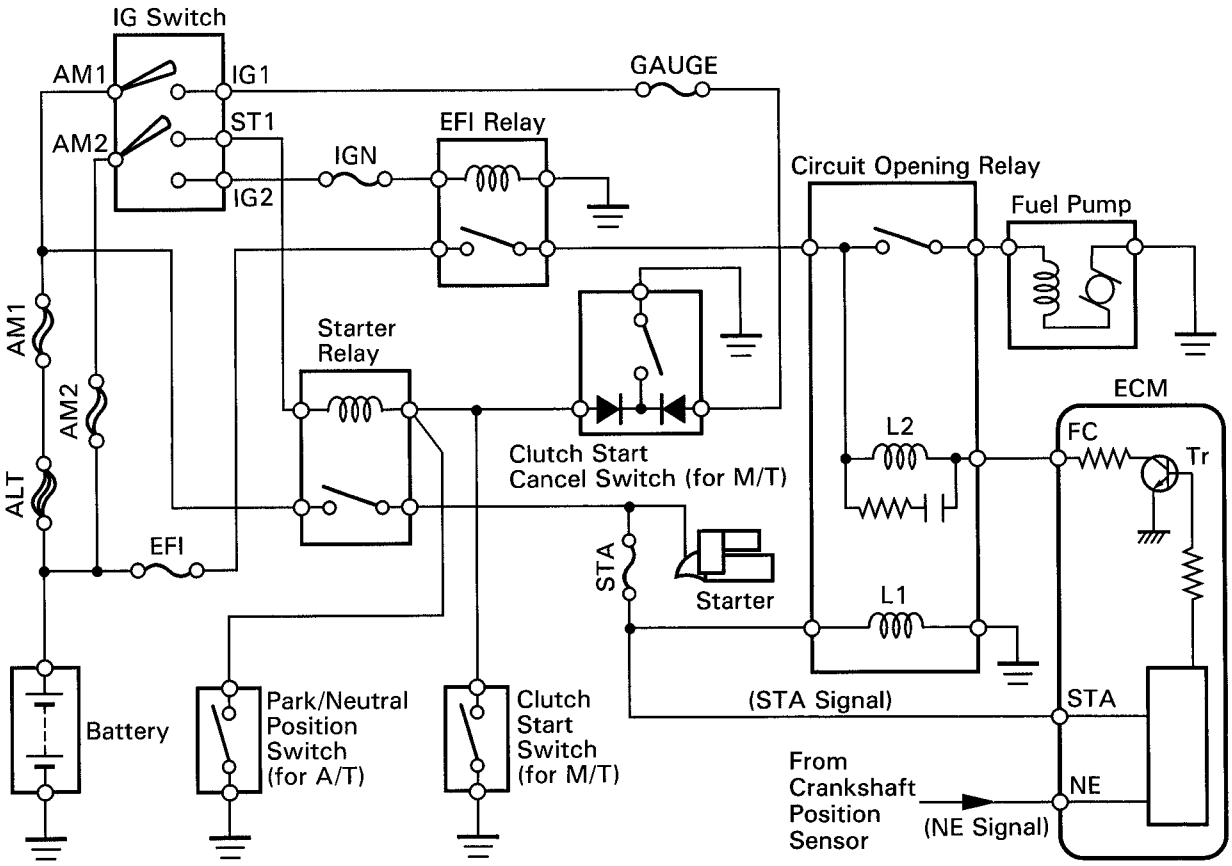

P23442

WIRING DIAGRAM

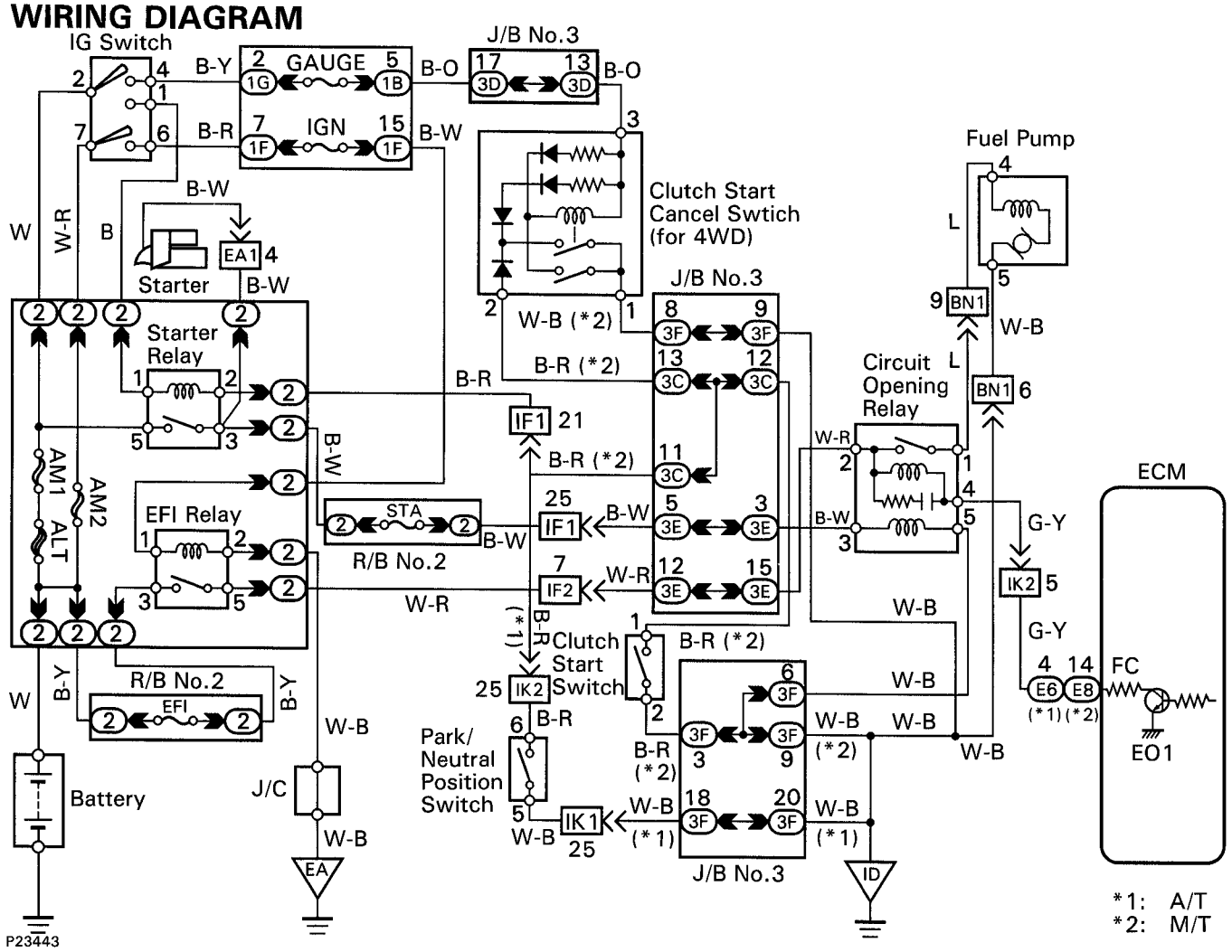

INSPECTION PROCEDURE

TOYOTA hand-held tester

1 **Connect the TOYOTA hand-held tester and check operation of fuel pump.**

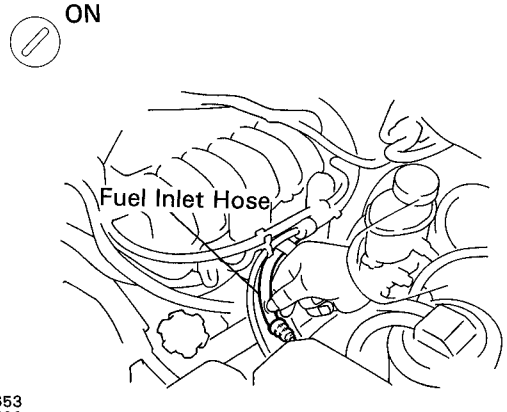

P (1) Connect the TOYOTA hand-held tester to the DLC3.
(2) Turn ignition switch ON and push TOYOTA hand-held tester main switch ON.
(3) Use ACTIVE TEST mode to operate the fuel pump.

C Check for fuel pressure in the fuel inlet hose when it is pinched off.

OK **There is pressure in the fuel inlet hose.**

HINT: At this time, you will hear a fuel flowing noise.

NG

OK → **Go to step 7 .**

2 Check for ECM power source circuit (See page EG-304).

OK → NG: **Repair or replace.**

3 Check circuit opening relay.

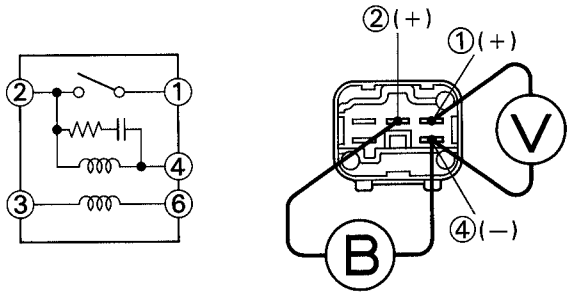

FI7053
P24222

P Remove circuit opening relay (See page EG-146).

C (1) Apply battery positive voltage between terminals 2 and 4.
(2) Measure voltage between terminals 1 and 4.

OK

Terminals 1 and 4	Same as battery

OK → NG: **Replace circuit opening relay.**

4 Check voltage between terminal FC of ECM and body ground.

ON

For A/T

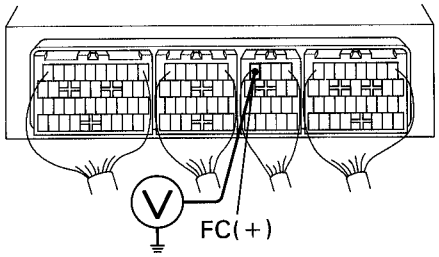

For M/T

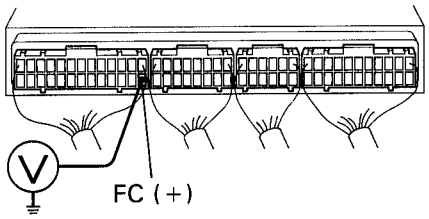

BE6653
P24335
P24225

P (1) Remove glove compartment (See page EG-161).
(2) Turn ignition switch ON.

C Measure voltage between terminal FC of ECM and body ground.

OK **Voltage: 9 – 14 V**

OK → NG: **Check for open in harness and connector between EFI relay and circuit opening relay, circuit opening relay and ECM (See page IN-24).**

5 Check fuel pump (See page EG-121).

OK → NG: **Repair or replace fuel pump.**

6 Check for open in harness and connector between circuit opening relay and fuel pump, fuel pump and body ground (See page IN-24).

OK → Check and replace ECM (See page IN-29).

NG → Repair or replace fuel pump.

7 Check circuit opening relay (See page EG-146).

OK → Check for open in harness and connector between terminal 6 of circuit opening relay connector and body ground (See page IN-24).

NG → Replace circuit opening relay.

8 Check voltage between terminal 3 of circuit opening relay connector and body ground.

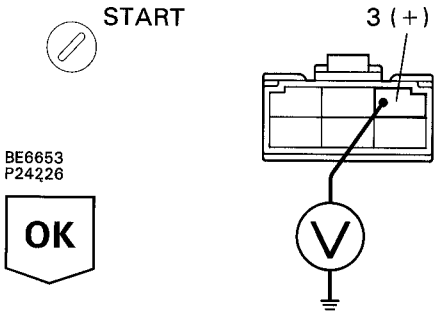

BE6653
P24226

C Measure voltage between terminal 3 of circuit opening relay connector and body ground when engine is cranked.

OK Voltage: 9 – 14 V

OK → Check for starter signal circuit (See page EG-298).

NG → Check for open in harness and connector between terminal 6 of circuit opening relay connector and body ground (See page IN-24).

OBD II scan tool (excluding TOYOTA hand-held tester)

1 **Check fuel pump operation.**

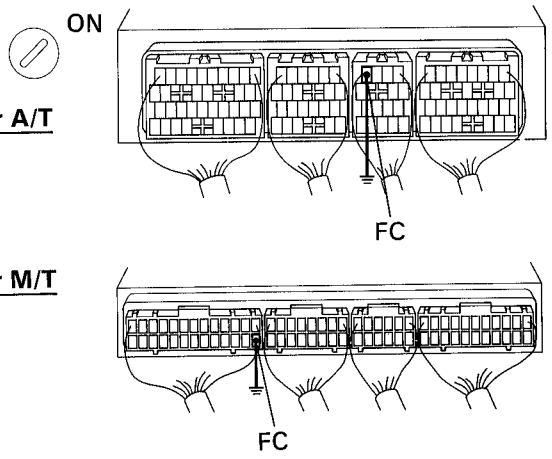

P (1) Remove glove compartment (See page EG-161).
(2) Turn ignition switch ON.

C (1) Connect between terminal FC of ECM and body ground.
(2) Check for fuel pressure in the fuel inlet hose when it is pinched off.

OK **There is pressure is the fuel inlet hose.**

HINT: At this time, you will hear a fuel flowing noise.

NG

OK → **Go to step 4 .**

2 **Check for ECM power source circuit (See page EG-304).**

OK

NG → **Repair or replace.**

3 **Check circuit opening relay (See page EG-146).**

OK

NG → **Replace circuit opening relay.**

4 **Check voltage between terminal FC of ECM and body ground (See page EG-311, step 4).**

OK

NG → **Check for open in harness and connector between EFI relay and circuit opening relay, circuit opening relay and ECM (See page IN-24).**

5 Check fuel pump (See page EG-121).

OK → NG: Repair or replace fuel pump.

6 Check for open in harness and connector between circuit opening relay and fuel pump, fuel pump and body ground (See page IN-24).

OK → NG: Repair or replace fuel pump.

Check and replace ECM (See page IN-29).

7 Check circuit opening relay (See page EG-146).

OK → NG: Replace circuit opening relay.

8 Check voltage between terminal 3 of circuit opening relay connector and body ground (See page EG-311, step [8]).

OK → NG: Check for starter signal circuit (See page EG-298).

Check for open in harness and connector between terminal 6 of circuit opening relay, connector and body ground (See page IN-24).

Fuel Pressure Control Circuit

CIRCUIT DESCRIPTION

The ECM turns on a VSV (Vacuum Switching Valve) to draw the air into the diaphragm chamber of the pressure regulator if it detects that the temperature of the engine coolant is too high during engine starting.
The air drawn into the chamber increases the fuel pressure to prevent fuel vapor lock at high engine temperature in order to help the engine start when it is warm.
Fuel pressure control ends apporx. 120 sec. after the engine is started.

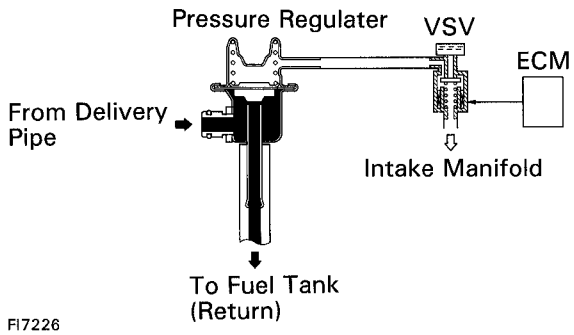

WIRING DIAGRAM

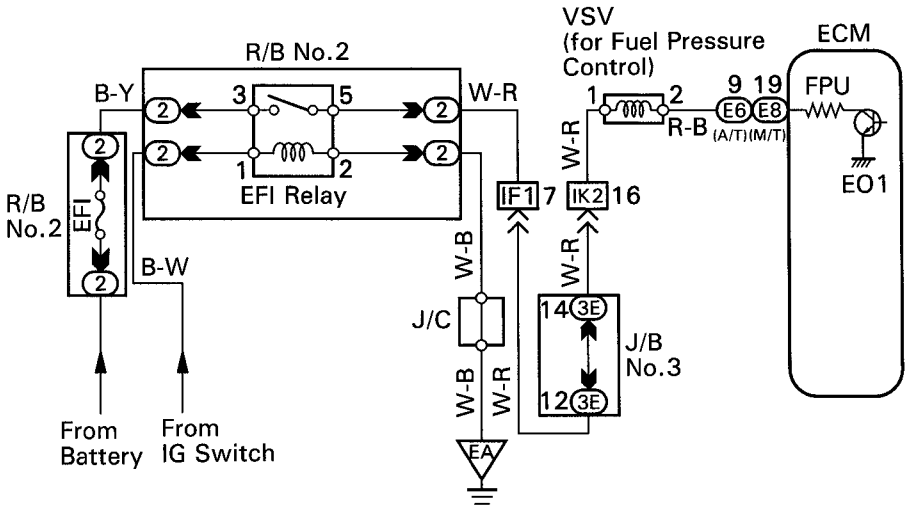

P23444

INSPECTION PROCEDURE

TOYOTA hand-held tester

1 **Connect the TOYOTA hand-held tester and check operation of VSV for fuel pressure control**

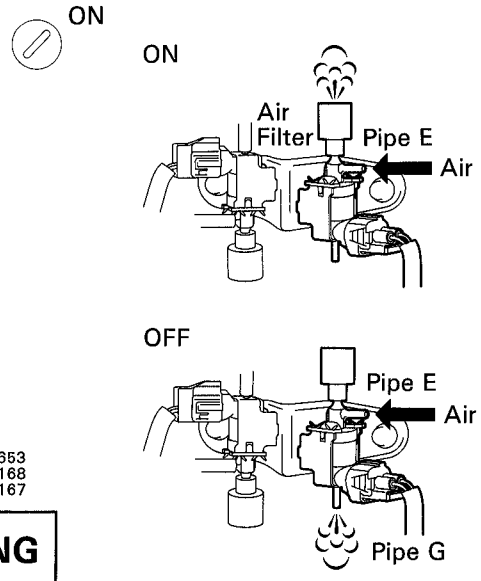

BE6653
P21168
P21167

P (1) Connect the TOYOTA hand-held tester to the DLC3.
(2) Turn ignition switch ON and push TOYOTA hand-held tester main switch ON.
(3) Select the ACTIVE TEST mode on the TOYOTA hand-held tester.

C Check operation of VSV when VSV is operated by the TOYOTA hand-held tester.

OK **VSV is ON:**
Air from pipe E is flowing out through the air filter.
VSV is OFF:
Air from pipe E is flowing out through pipe G.

NG

OK **Check and repair fuel pressure regulator (See page EG-126).**

2 **Check VSV for fuel pressure control (See page EG-148).**

OK

NG **Replace VSV for fuel pressure control.**

3 Check for open and short in harness and connector between EFI relay and ECM (See page IN-24).

OK → Check and replace ECM (See page IN-29).

NG → Rapair or replace harness or connector.

OBD Ⅱ scan tool (excluding TOYOTA hand-held tester)

1 Check VSV for fuel pressure control (See page EG-148).

OK → **2** Check voltage between terminal FPU of ECM connector and body ground.

NG → Replace VSV for fuel pressure control.

ON

For A/T

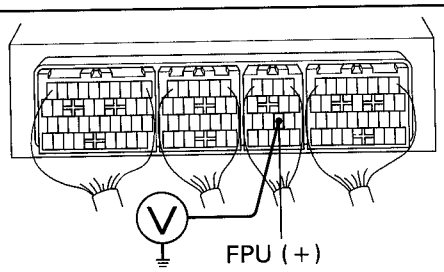

For M/T

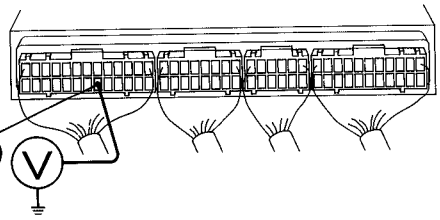

P (1) Remove glove compartment (See page EG-161).
(2) Turn ignition switch ON.

C Measure voltage between terminal FPU of ECM connector and body ground.

OK Voltage: 9 – 14 V

OK → **3** Check fuel pressure regulator (See page EG-120).

NG → Check for open and short in harness and connector between EFI relay and ECM (See page IN-24).

OK → Check and replace ECM (See page IN-29).

NG → Repair or replace.

IGNITION SYSTEM

(2RZ–FE, 3RZ–FE)
PREPARATION ..... IG– 2
ON–VEHICLE INSPECTION ..... IG– 2
DISTRIBUTOR ..... IG– 7
CRANKSHAFT POSITION SENSOR ..... IG– 12
SERVICE SPECIFICATIONS ..... IG– 13
(5VZ–FE)
PREPARATION ..... IG– 14
ON–VEHICLE INSPECTION ..... IG– 14
IGNITION COIL ..... IG– 20
CAMSHAFT POSITION SENSOR ..... IG– 21
CRANKSHAFT POSITION SENSOR ..... IG– 22
SERVICE SPECIFICATIONS ..... IG– 23

(2RZ–FE, 3RZ–FE)

PREPARATION

RECOMMENDED TOOLS

IG00S–02

	09082–00050 TOYOTA Electrical Tester Set.	
	09200–00010 Engine Adjust Kit .	

IG

EQUIPMENT

IG00T–00

Spark plug cleaner	
Torque wrench	

SSM (SPECIAL SERVICE MATERIALS)

IG00U–00

08826–00080	Seal Packing Black or equivalent (FIPG)	Ignition coil

ON–VEHICLE INSPECTION

SPARK TEST

IG0G6–02

CHECK THAT SPARK OCCURS

(a) Disconnect the high–tension cords from the spark plugs.
(b) Remove the spark plugs.
(c) Install the spark plugs to each high–tension cord.
(d) Ground the spark plug.
(e) Check if spark occurs while engine is being cranked.
HINT: To prevent gasoline from being injected from injectors during this test, crank the engine for no more than 1 – 2 seconds at a time.
If the spark does not occur, perform the test as follows:

SPARK TEST
↓ NO
CHECK CONNECTION OF IGNITION COIL IGNITER AND DISTRIBUTOR CONNECTOR → BAD → Connect securely.
↓ OK
CHECK RESISTANCE OF HIGH-TENSION CORD (See page IG-3)
Maximum resistance: 25 kΩ per cord → BAD → Replace the cord (s).
↓ OK
CHECK POWER SUPPLY TO IGNITION COIL AND IGNITER
1. Turn ignition switch to ON.
2. Check that there is battery voltage at ignitin coil positive (+) terminal.
→ BAD → Check wiring between ignition switch to ignition coil and igniter
↓ OK
CHECK RESISTANCE OF IGNITION COIL (See page IG-5)

Resistance:	Cold	Hot
Primary	0.36 – 0.55 Ω	0.45 – 0.65 Ω
Secondary	9.0 – 15.4 kΩ	11.4 – 18.1 kΩ

→ BAD → Replace the ignition coil.
↓ OK
CHECK RESISTANCE OF SIGNAL GENERATOR (PICKUP COIL) (See page IG-5)

Resistance:	Cold	Hot
G ⊕ and G ⊖	185 – 275 Ω	240 – 325 Ω

→ BAD → Replace the distributor housing assembly.
↓ OK
CHECK RESISTANCE OF CRANKSHAFT POSITION SENSOR (See page IG-6)

Resistance:	Cold	Hot
NE ⊕ and NE ⊖	1630 – 2740 Ω	2065 – 3225 Ω

→ BAD → Replace the crankshaft position sensor.
↓ OK
CHECK AIR GAP OF DISTRIBUTOR (See page IG-5)
Air gap: 0.2 – 0.4 mm (0.008 – 0.016 in.) → BAD → Replace the distributor housing assembly.
↓ OK
CHECK IGT SIGNAL FROM ECM (See EG section) → BAD → Check wiring between ECM, distributor and igniter, and then try another ECM.
↓
TRY ANOTHER IGNITER

V06122

HIGH–TENSION CORDS INSPECTION

I30J1–01

1. **REMOVE AIR CLEANER CAP AND MAF METER ASSEMBLY**
2. **REMOVE INTAKE AIR CONNECTOR**
3. **DISCONNECT HIGH–TENSION CORDS FROM SPARK PLUGS**

Disconnect the high – tension cords at the rubber boot.

DO NOT pull on the cords.

NOTICE: Pulling on or bending the cords may damage the conductor inside.

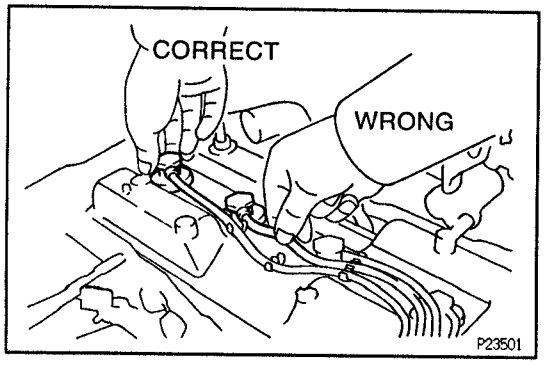

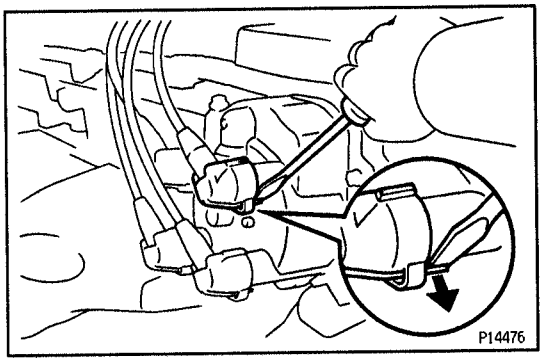

4. DISCONNECT HIGH–TENSION CORDS FROM DISTRIBUTOR CAP

(a) Using a screwdriver, lift up the lock claw and disconnect the holder from the distributor cap.

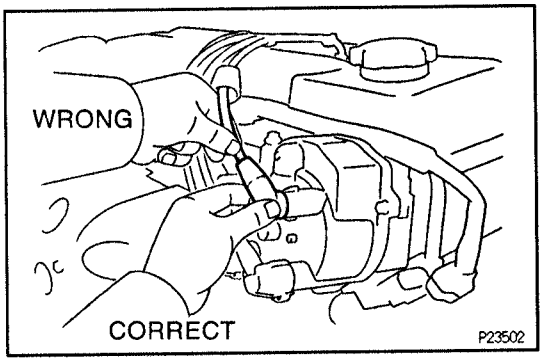

(b) Disconnect the high–tension cord at the grommet. DO NOT pull on the cord.

NOTICE:

- **Pulling on or bending the cords may damage the conductor inside.**
- **Do not wipe any of the oil from the grommet after the high–tension cord is disconnected.**

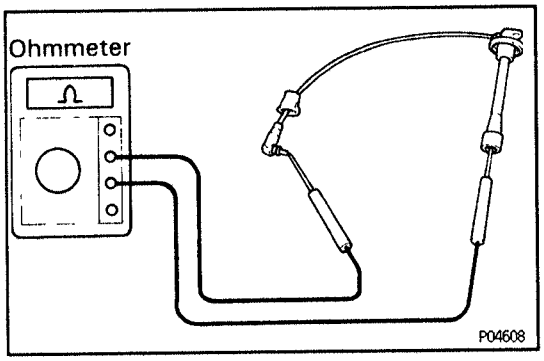

5. INSPECT HIGH–TENSION CORD RESISTANCE

Using an ohmmeter, measure the resistance.

Maximum resistance:

25 kΩ per cord

If the resistance is greater than the maximum, check the terminals. If necessary, replace the high–tension cord.

6. RECONNECT HIGH–TENSION CORDS TO DISTRIBUTOR CAP

(a) Connect the high–tension cords to the distributor cap.

NOTICE: Check that the holder is correctly installed to the grommet and distributor cap as shown in the illustration.

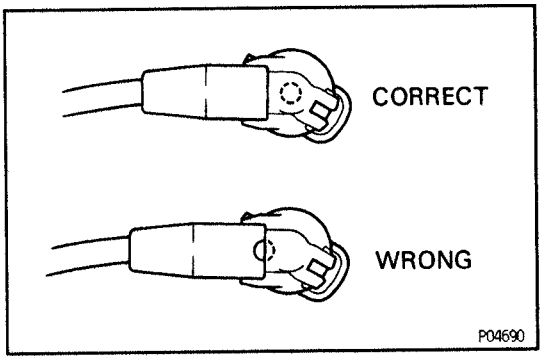

(b) Check that the lock claw of the holder is engaged by lightly pulling the holder.

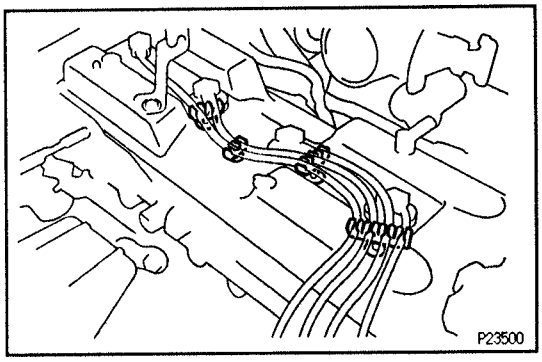

7. RECONNECT HIGH–TENSION CORDS TO SPARK PLUGS

Secure the high–tension cords with the clamps as shown in the illustration.

8. REINSTALL INTAKE AIR CONNECTOR

9. REINSTALL AIR CLEANER CAP AND MAF METER ASSEMBLY

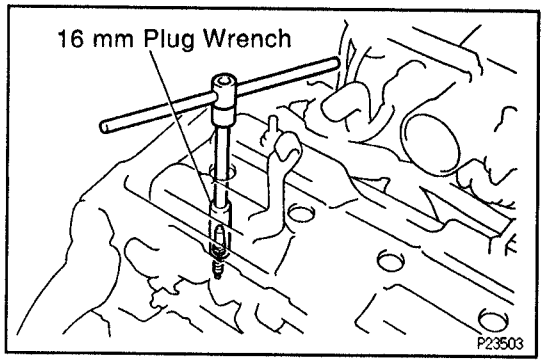

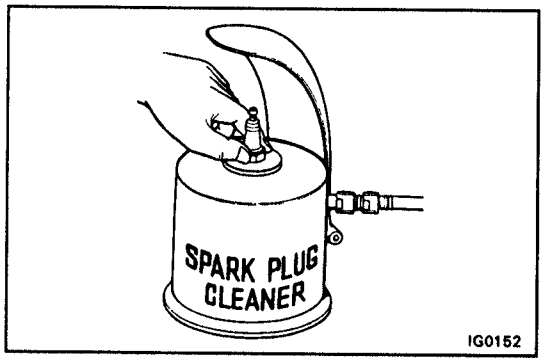

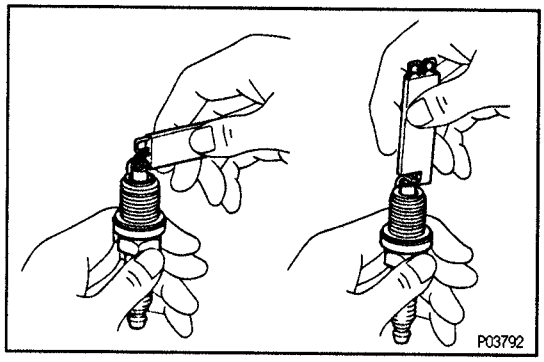

SPARK PLUGS INSPECTION

IGOJ2–01

1. **DISCONNECT HIGH–TENSION CORDS FROM SPARK PLUGS**
   (See steps 1 to 3 in high–tension cords inspection)
2. **REMOVE SPARK PLUGS**
   Using a 16 mm plug wrench, remove the spark plug.
3. **CLEAN SPARK PLUGS**
   Using a spark plug cleaner or wire brush, clean the spark plug.
4. **VISUALLY INSPECT SPARK PLUGS**
   Check the spark plug for electrode wear, threads damage and insulator damage.
   If abnormal, replace the plugs.
   Recommended spark plugs:
   ND: K16R–U
   NGK: BKR5EYA
5. **ADJUST ELECTRODE GAP**
   Carefully bend the outer electrode to obtain the correct electrode gap.
   Correct electrode gap:
   0.8 mm (0.031 in.)
6. **INSTALL SPARK PLUGS**
   Using a 16 mm plug wrench, install the spark plug.
   Torque: 20 N·m (200 kgf·cm, 14 ft·lbf)
7. **RECONNECT HIGH–TENSION CORDS TO SPARK PLUGS**
   (See steps 7 to 9 in high–tension cords inspection)

IGOJ3–01

DISTRIBUTOR INSPECTION

NOTICE: "Cold" and "Hot" in the following sentences express the temperature of the coils themselves. "Cold" is from –10°C (14°F) to 50°C (122°F) and "Hot" is from 50°C (122°F) to 100°C (212°F).

1. **DISCONNECT DISTRIBUTOR CONNECTOR**
2. **REMOVE DISTRIBUTOR CAP AND ROTOR**
3. **REMOVE IGNITION COIL DUST COVER**

Ignition Coil

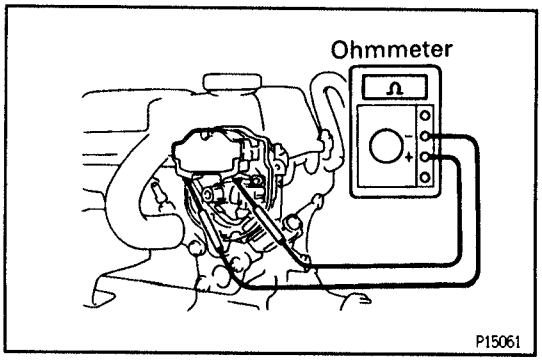

4. **INSPECT PRIMARY COIL RESISTANCE**
   Using an ohmmeter, measure the resistance between the positive (+) and negative (–) terminals.
   Primary coil resistance:
   Cold: 0.36 – 0.55 Ω
   Hot: 0.45 – 0.65 Ω

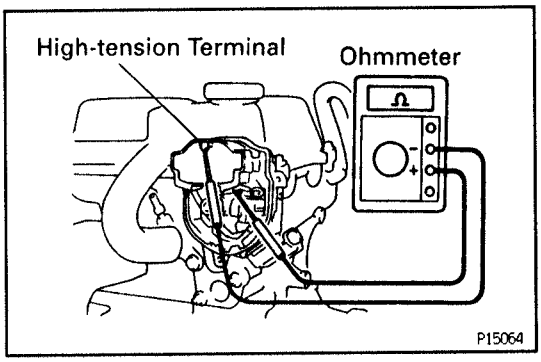

If the resistance is not as specified, replace the ignition coil.

5. **INSPECT SECONDARY COIL RESISTANCE**
Using an ohmmeter, measure the resistance between positive (+) and high–tension terminals.
Secondary coil resistance:
Cold: 9.0 – 15.4 kΩ
Hot: 11.4 – 18.1 kΩ
If the resistance is not as specified, replace the ignition coil.

Distributor

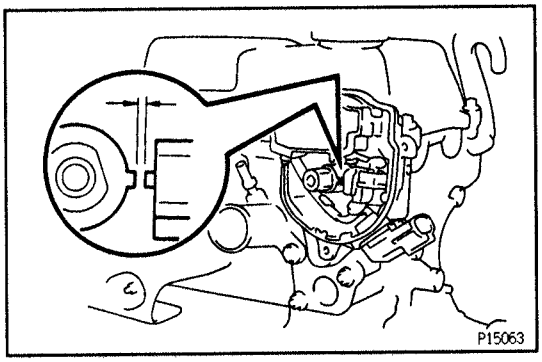

6. **INSPECT AIR GAP**
Using a feeler gauge, measure the air gap between the signal rotor and pickup coil projection.
Air gap:
0.2 – 0.4 mm (0.008 – 0.016 in.)
If the air gap is not as specified, replace the distributor housing assembly.

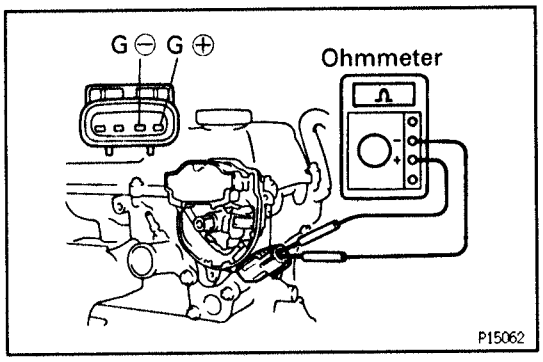

7. **INSPECT SIGNAL GENERATOR (PICKUP COIL) RESISTANCE**
Using an ohmmeter, measure the resistance between the terminals.
Pickup coil resistance (G ⊕ and G ⊖):
Cold: 185 – 275 Ω
Hot: 240 – 325 Ω
If the resistance is not as specified, replace the distributor housing assembly.
8. **REINSTALL IGNITION COIL DUST COVER**
9. **REINSTALL ROTOR AND DISTRIBUTOR CAP**
10. **RECONNECT DISTRIBUTOR CONNECTOR**

IGOG9–02

CRANKSHAFT POSITION SENSOR INSPECTION

NOTICE: "Cold" and "Hot" in the following sentences express the temperature of the sensors themselves. "Cold" is from –10°C (14°F) to 50 °C (122°F) and "Hot" is from 50°C (122°F) to 100°C (212°F).

1. **REMOVE CRANKSHAFT POSITION SENSOR**
(See crankshaft position sensor removal in crankshaft position sensor)

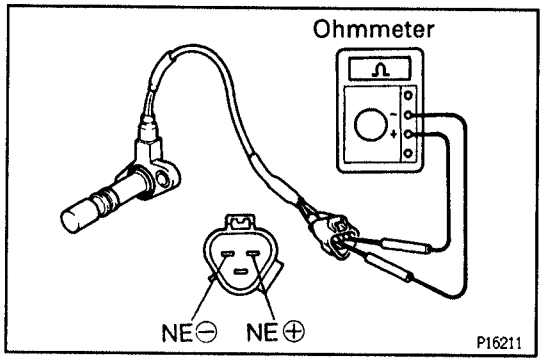

2. **INSPECT CRANKSHAFT POSITION SENSOR RESISTANCE**

Using an ohmmeter, measure the resistance between the terminals.

Resistance (NE ⊕ and NE ⊖):

Cold: 1,630 – 2,740 Ω

Hot: 2,065 – 3,225 Ω

If the resistance is not as specified, replace the crankshaft position sensor.

3. **REINSTALL CRANKSHAFT POSITION SENSOR**

IQ00Z–0C

IGNITER INSPECTION

(See procedure Spark Test in on–vehicle inspection)

IG

DISTRIBUTOR

COMPONENTS FOR REMOVAL AND INSTALLATION

IQ039–0B

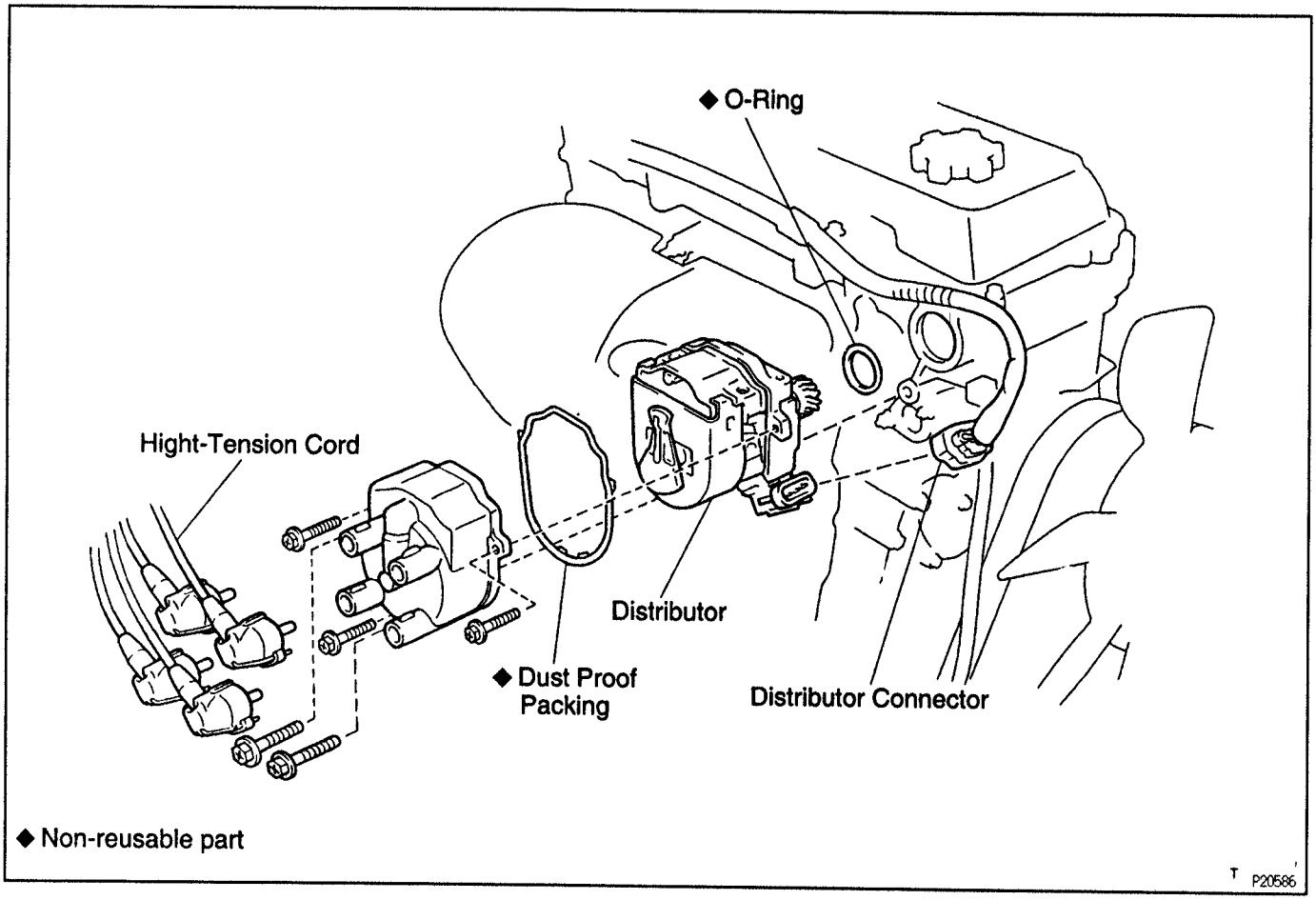

IG0GA–02

DISTRIBUTOR REMOVAL

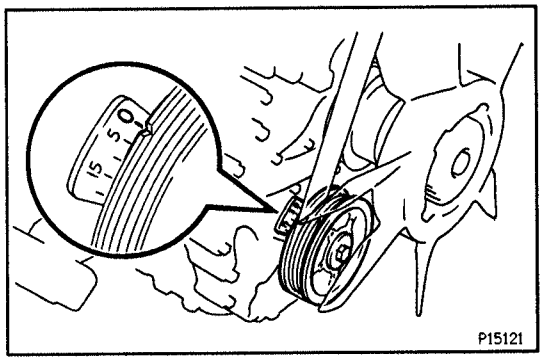

1. DISCONNECT DISTRIBUTOR CONNECTOR

2. DISCONNECT HIGH–TENSION CORDS FROM DISTRIBUTOR CAP
(See step 4 in high–tension cords inspection)

3. SET NO.1 CYLINDER TO TDC/COMPRESSION

(a) Turn the crankshaft pulley clockwise until the timing mark is aligned with "0" mark on the oil pump cover.

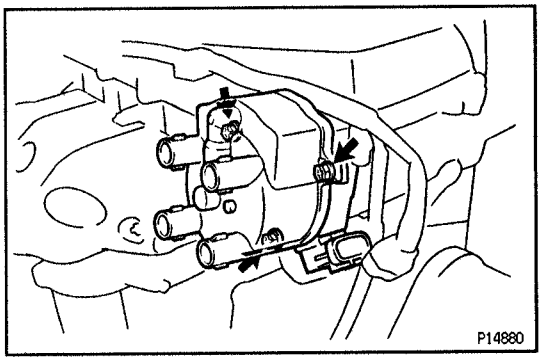

(b) Remove the 3 bolts and distributor cap.

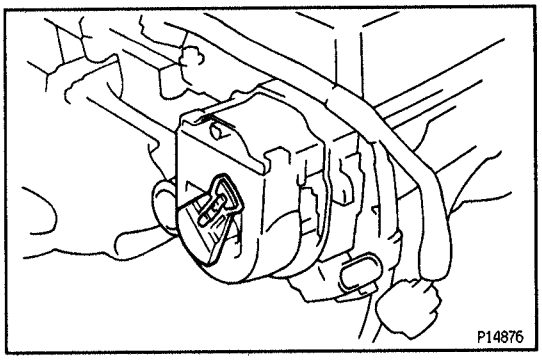

(c) Check that the distributor rotor direction is as shown. If not, turn the crankshaft pulley one complete revolution.

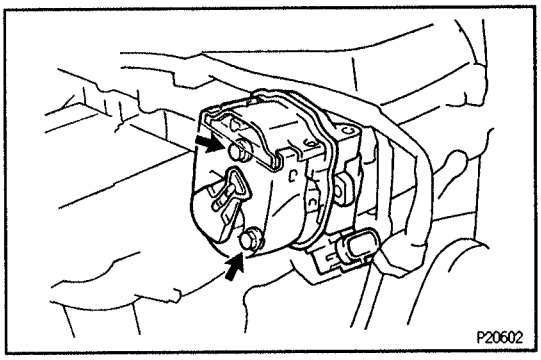

4. REMOVE DISTRIBUTOR

(a) Remove the 2 mounting bolts, and pull out the distributor.

(b) Remove the O–ring from the distributor housing.

COMPONENTS FOR DISASSEMBLY AND ASSEMBLY

IGO44–04

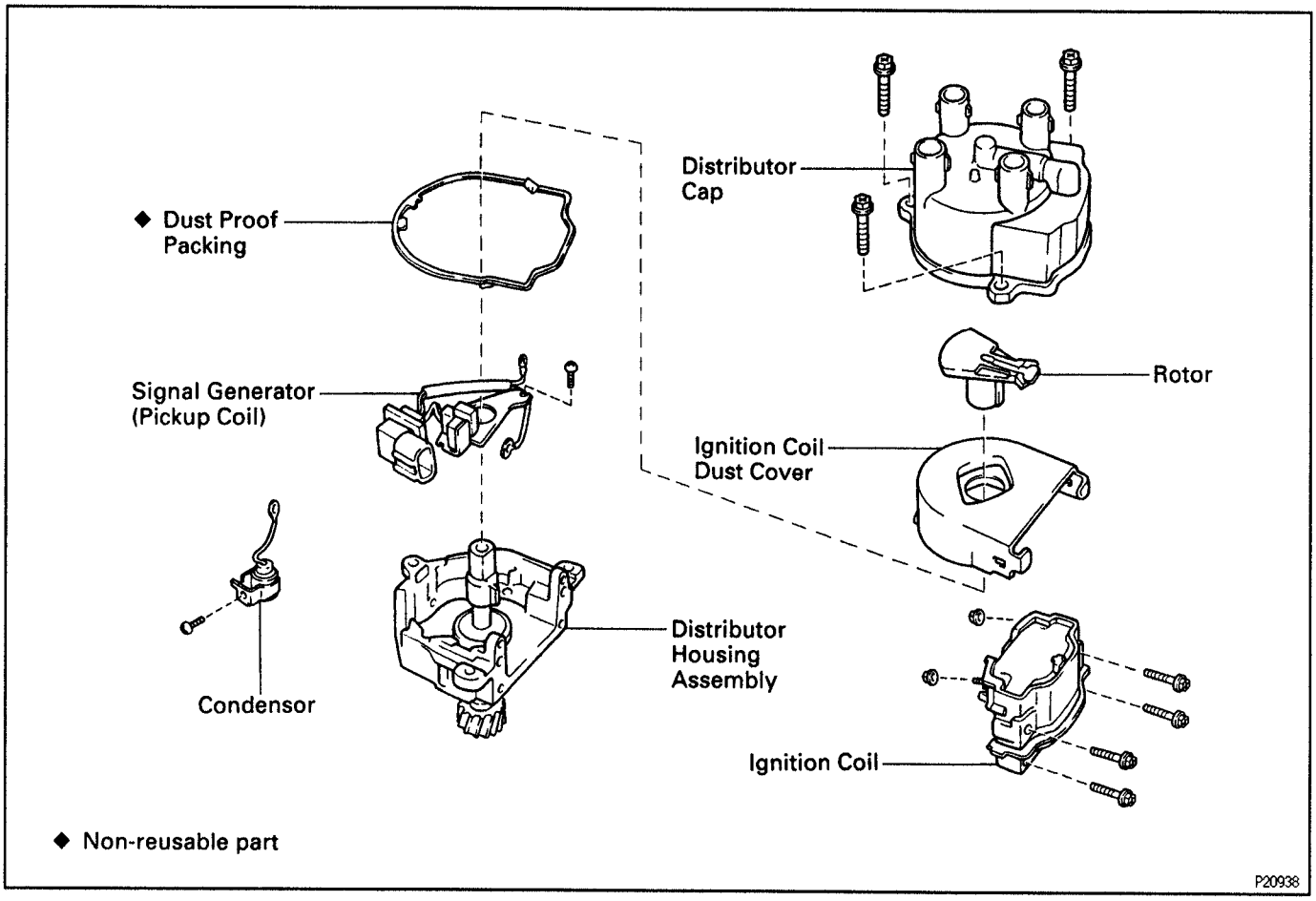

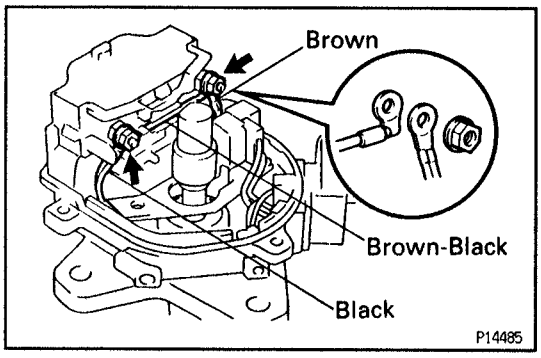

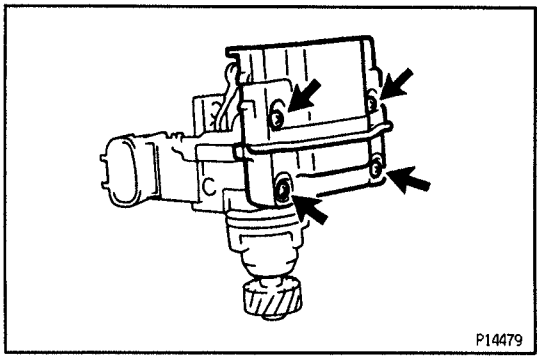

DISTRIBUTOR DISASSEMBLY

IGGJ4–01

1. **REMOVE ROTOR**
2. **REMOVE IGNITION COIL DUST COVER**

(a) Remove the dust cover.

(b) Remove the dust proof packing.

3. **REMOVE IGNITION COIL**

(a) Remove the 2 nuts, and disconnect the 3 wires from the ignition coil terminals.

(b) Remove the 4 screws and ignition coil.

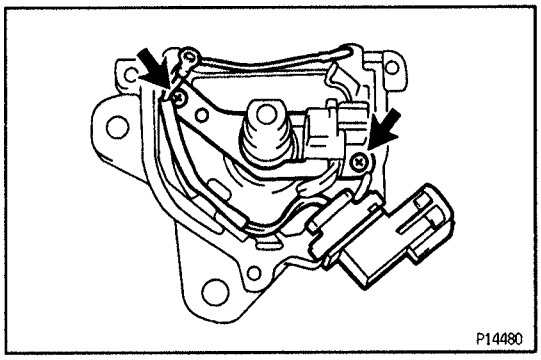

4. **REMOVE SIGNAL GENERATOR (PICKUP COIL)**
Remove the 2 screws and signal generator (pickup coil) from the distributor housing.

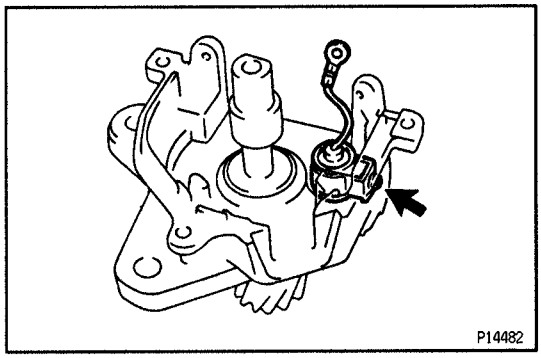

5. **REMOVE CONDENSER**
Remove the screw and condenser.

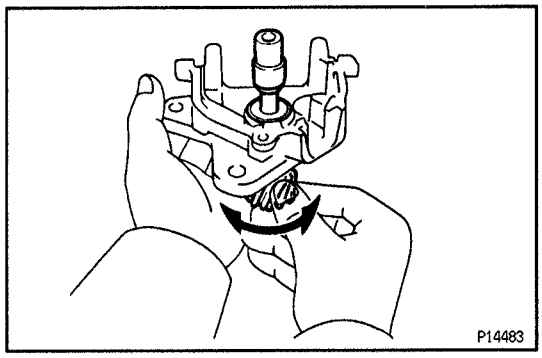

IG013–0P

DISTRIBUTOR INSPECTION

INSPECT SHAFT

Turn the shaft and check that it is not rough or worn. If it feels rough or worn, replace the distributor housing assembly.

IG0J8–01

DISTRIBUTOR ASSEMBLY

1. **INSTALL CONDENSER**
Install the condenser with the screw.
2. **INSTALL SIGNAL GENERATOR (PICKUP COIL)**

(a) Install the signal generator (pickup coil) to the distributor housing.

(b) Align the rotor tooth with the pickup coil, and temporarily install the 2 screws.

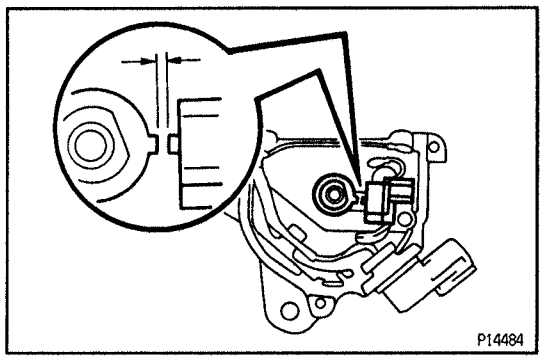

(c) Using a thickness gauge, set the air gap and tighten the 2 screws.

Air gap:

0.2 – 0.4 mm (0.008 – 0.016 in.)

NOTICE: Be sure that the wires do not contact with the signal rotor.

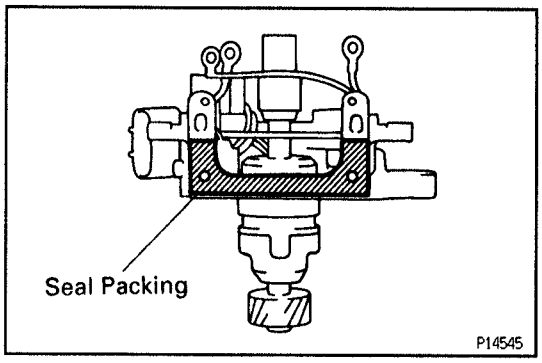

3. INSTALL IGNITION COIL

(a) Remove any old packing (FIPG) material.

(b) Apply seal packing to the ignition coil installing surface of the housing as shown in the illustration.

Seal packing:

Part No. 08826–00080 or equivalent

(c) Install the ignition coil with the 4 screws.

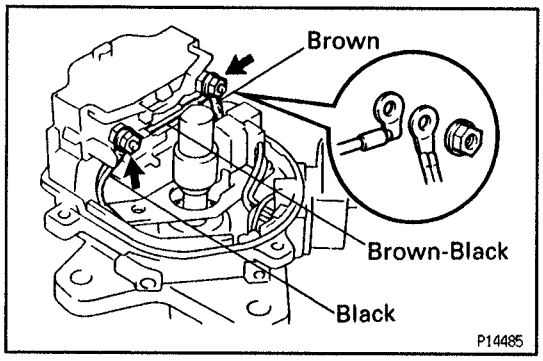

(d) Connect the 3 wires to the ignition coil terminals with the 2 nuts as shown in the illustration.

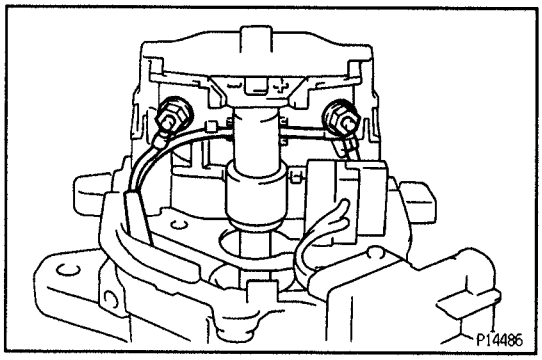

NOTICE:

- **When connecting the wires to the ignition coil, insert the wire properly into the groove on the side of the ignition coil.**
- **Be sure the wires do not contact with signal rotor or distributor housing.**

4. INSTALL IGNITION COIL DUST COVER

(a) Install a new dust proof packing to the distributor housing.

(b) Install the dust cover.

5. INSTALL ROTOR

DISTRIBUTOR INSTALLATION

IGOJ8–01

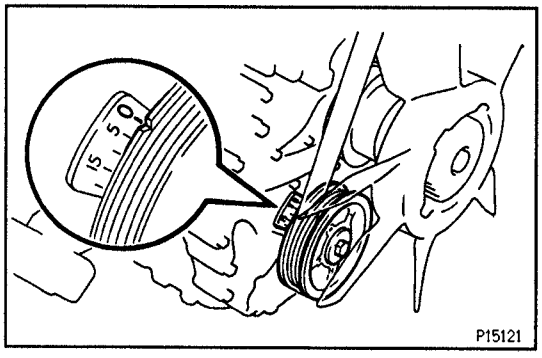

1. CHECK NO.1 CYLINDER TO TDC/COMPRESSION

If necessary, remove the cylinder head cover, and check the following conditions:

- Turn the crankshaft pulley clockwise and align its groove with the timing mark "0" of the oil pump cover.

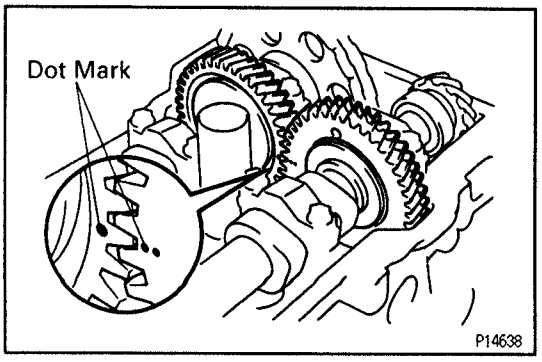

- Verify that the timing marks with 1 and 2 dots are in straight line on the cylinder head surface as shown in the illustration.

If not, turn the crankshaft 1 revolution (360°) and align the mark as above.

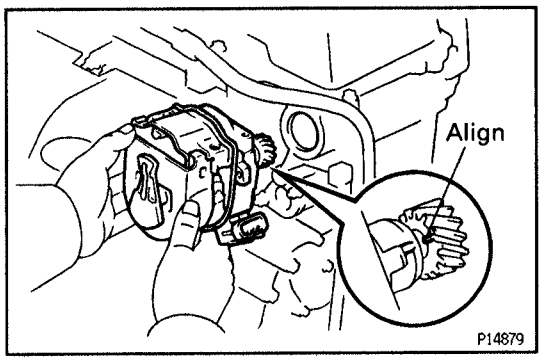

2. INSTALL DISTRIBUTOR

(a) Install a new O–ring to the distributor.
HINT: Always use a new O–ring when installing the distributor.

(b) Align the protrusion of the distributor housing with the groove on the driven gear.

(c) Apply a light coat of engine oil on the O–ring.

(d) Install the distributor with 2 bolts.
Torque: 19 N·m (195 kgf·cm, 14 ft·lbf)

3. INSTALL DISTRIBUTOR CAP

4. RECONNECT HIGH–TENSION CORDS TO DISTRIBUTOR CAP

5. CONNECT DISTRIBUTOR CONNECTOR

6. CHECK IGNITION TIMING
(See ignition timing inspection in Engine Mechanical)

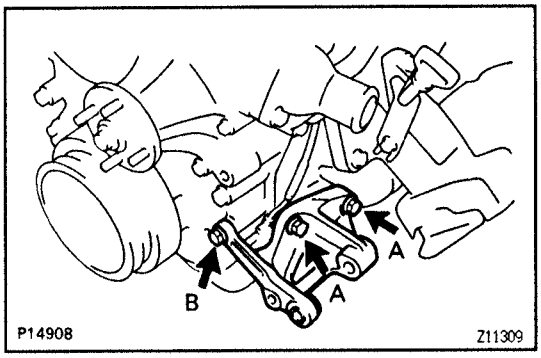

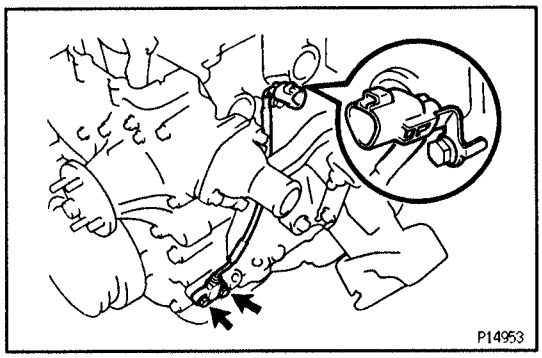

CRANKSHAFT POSITION SENSOR

IGOGD–02

CRANKSHAFT POSITION SENSOR

REMOVAL

1. REMOVE ENGINE UNDER COVER

2. REMOVE GENERATOR
(See generator removal in Charging System)

3. REMOVE GENERATOR BRACKET
Remove the 3 bolts and bracket.
Torque:
Bolt A: 74.5 N·m (760 kgf·cm, 55 ft·lbf)
Bolt B: 18 N·m (180 kgf·cm, 13 ft·lbf)

4. DISCONNECT CRANKSHAFT POSITION SENSOR CONNECTOR

5. REMOVE CRANKSHAFT POSITION SENSOR

(a) Remove the 2 bolts and crankshaft position sensor.
Torque: 8.5 N·m (85 kgf·cm, 74 in.·lbf)

(b) Remove the O–ring.
INSTALLATION HINT:
- Always use a new O–ring when installing the crankshaft position sensor.
- Apply a light coat of engine oil on the O–ring.

IGOJ7–01

CRANKSHAFT POSITION SENSOR

INSTALLATION

Installation is in the reverse order of removal.

SERVICE SPECIFICATIONS

SERVICE DATA

IG05M–07

Firing order	–		1 – 3 – 4 – 2
High–tension cord	Resistance	Maximum	25 kΩ per cord
Spark plug	Recommended spark plug	ND	K16R–U
	Recommended spark plug	NGK	BKR5EYA
	Correct electrode gap		0.8 mm (0.031 in.)
Ignition coil	Primary coil resistance	Cold	0.36 – 0.55 Ω
		Hot	0.45 – 0.65 Ω
	Secondary coil resistance	Cold	9.0 – 15.4 kΩ
		Hot	11.4 – 18.1 kΩ
Distributor	Air gap		0.2 – 0.4 mm (0.008 – 0.0016 in.)
	Signal generator (pickup coil) resistance		
	at cold	G⊕ – G⊖	185 – 275 Ω
	at hot	G⊕ – G⊖	240 – 325 Ω
Crankshaft position sensor	Resistance at cold	NE⊕ – NE⊖	1,630 – 2,740 Ω
	at hot	NE⊕ – NE⊖	2,065 – 3,225 Ω

IG017–0F

TORQUE SPECIFICATIONS

Part tightened	N·m	kgf·cm	ft·lbf
Spark plug x Cylinder head	20	200	14
Distributor x Cylinder head	19	195	14
Crankshaft position sensor x Timing chain cover	8.5	85	74 in.·lbf
Generator bracket x Cylinder block	74.5	760	55
Generator bracket x Timing chain cover	18	180	13

(5VZ–FE)

PREPARATION

RECOMMENDED TOOLS

IG02N–0H

	09082–00050 TOYOTA Electrical Tester Set.	
	09200–00010 Engine Adjust Kit .	

IG

EQUIPMENT

IG02P–0H

Megger insulation resistance meter	Spark plug
Spark plug cleaner	

ON–VEHICLE INSPECTION

SPARK TEST

IG0GE–03

CHECK THAT SPARK OCCURS

(a) Disconnect high–tension cords from spark plug.
(b) Remove the spark plug.
(c) Install the spark plug to each high–tension cord.
(d) Ground the spark plug.
(e) Check if spark occurs while engine is being cranked.
NOTICE: To prevent excess fuel being injected from the injectors during this test, do not crank the engine for more 5 – 10 seconds at a time.
If the spark does not occur, do the test as follows:

SPARK TEST

NO

CHECK CONNECTION OF IGNITION COIL IGNITER → BAD → Connect securely.

OK

CHECK RESISTANCE OF HIGH-TENSION CORD
(See page IG-16)
Maximum resistance: 25 kΩ per cord → BAD → Replace the cord (s).

OK

CHECK POWER SUPPLY TO IGNITION COIL AND IGNITER
1. Turn ignition switch to ON.
2. Check that there is battery voltage at ignition coil positive (+) terminal.

→ BAD → Check wiring between ignition switch to ignition coil and igniter.

OK

CHECK RESISTANCE OF IGNITION COIL
(See page IG-18)

Resistance:	Cold	Hot
Primary	0.67 – 1.05 Ω	0.85 – 1.23 Ω
Secondary	9.3 – 16.0 kΩ	11.7 – 18.8 kΩ

→ BAD → Replace the ignition coil.

OK

CHECK RESISTANCE OF CAMSHAFT POSITION SENSOR
(See page IG-19)

Resistance:	Cold	Hot
G ⊕ and G ⊖	835 – 1,400 Ω	1,060 – 1,645 Ω

→ BAD → Replace the camshaft position sensor.

OK

CHECK RESISTANCE OF CAMSHAFT POSITION SENSOR
(See page IG-23)

Resistance:	Cold	Hot
NE ⊕ and NE ⊖	1,630 – 2,740 Ω	2,065 – 3,225 Ω

→ BAD → Replace the crankshaft position sensor.

OK

CHECK IGT SIGNAL FROM ECM
(See EG section) → BAD → Check wiring between ECM, distributor and igniter, and then try another ECM.

TRY ANOTHER IGNITER

V06648

IG0J8-01

HIGH–TENSION CORDS INSPECTION

1. REMOVE AIR CLEANER CAP AND MAF METER ASSEMBLY

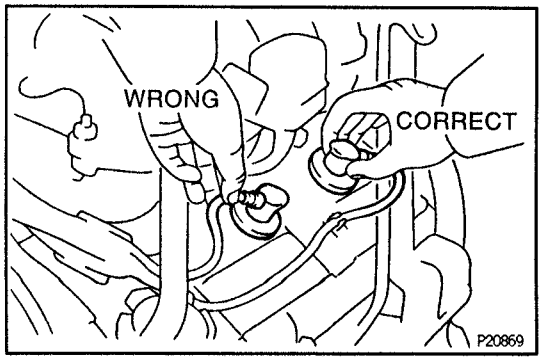

2. DISCONNECT HIGH–TENSION CORDS FROM SPARK PLUGS

Disconnect the high – tension cords at the rubber boot.

DO NOT pull on the cords.

NOTICE: Pulling on or bending the cords may damage the conductor inside.

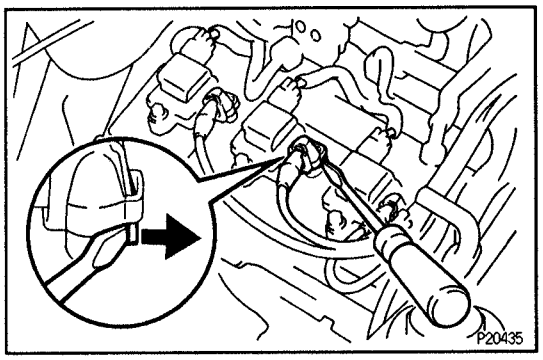

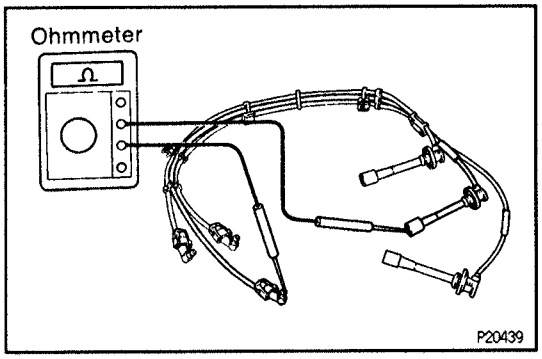

3. DISCONNECT HIGH–TENSION CORDS FROM IGNITION COILS

(a) Using a screwdriver, lift up the lock claw and disconnect the holder from the ignition coils.

(b) Disconnect the high–tension cord at the grommet. DO NOT pull on the cord.

NOTICE:

- **Pulling on or bending the cords may damage the conductor inside.**
- **Do not wipe any of the oil from the grommet after the high–tension cord is disconnected.**

4. INSPECT HIGH–TENSION CORD RESISTANCE

Using an ohmmeter, measure the resistance.

Maximum resistance:

25 kΩ per cord

If the resistance is greater than the maximum, check the terminals. If necessary, replace the high–tension cord.

5. RECONNECT HIGH–TENSION CORDS TO IGNITION COILS

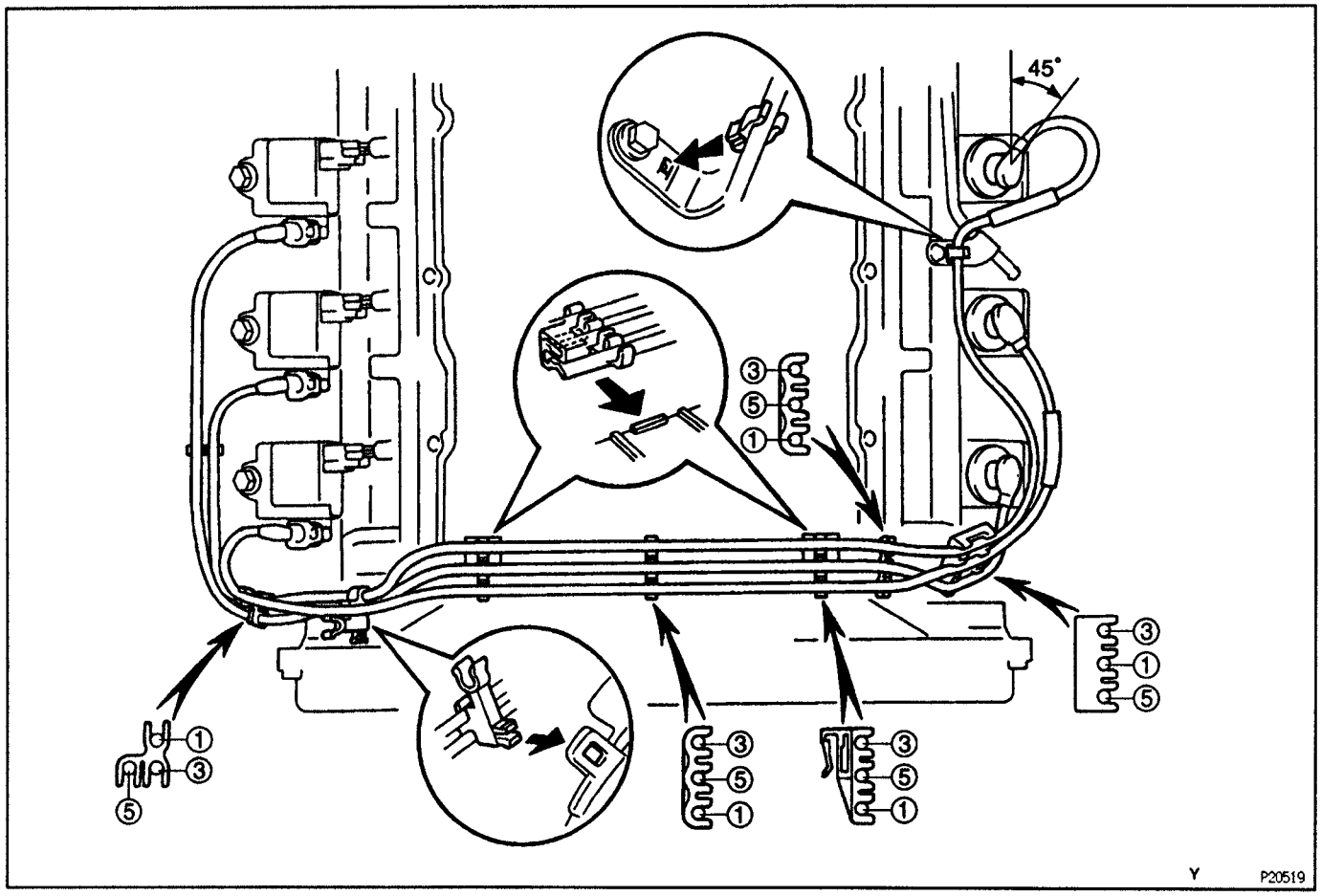

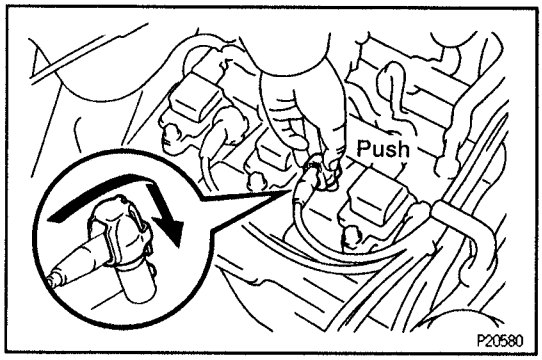

(a) Assemble the holder and grommet.
(b) Align the spline of the ignition coil with the spline of the holder, and push in the cord.

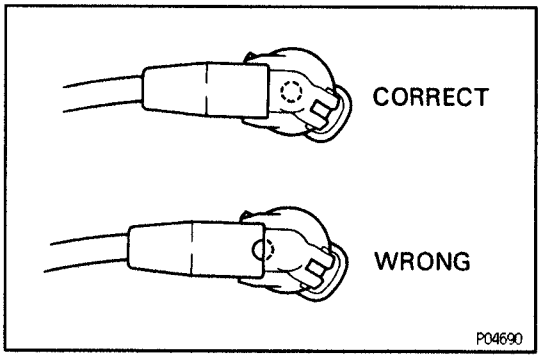

NOTICE: Check that the holder is correctly installed to the grommet and distributor cap as shown in the illustration.

(c) Check that the lock claw of the holder is engaged by lightly pulling the holder.

6. RECONNECT HIGH–TENSION CORDS TO SPARK PLUGS

7. REINSTALL AIR CLEANER CAP AND MAF METER ASSEMBLY

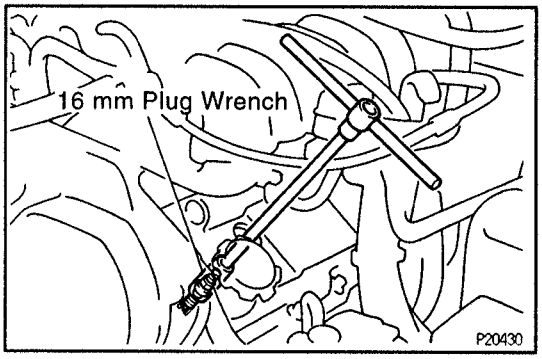

SPARK PLUGS INSPECTION

1GGG–02

1. DISCONNECT HIGH–TENSION CORDS
(See steps 1 to 3 in high–tension cords inspection)

2. REMOVE IGNITION COILS
(See step 3 in ignition coils removal)

3. REMOVE SPARK PLUGS
Using a 16 mm plug wrench, remove the 6 spark plugs from the RH and LH cylinder heads.

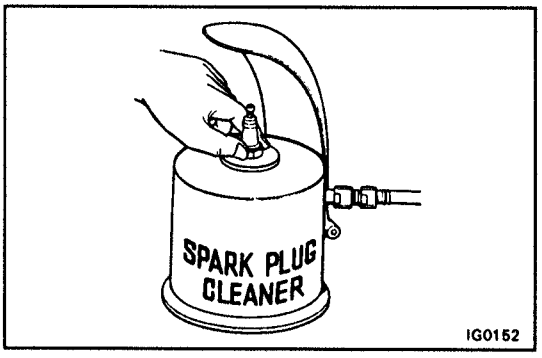

4. CLEAN SPARK PLUGS
If the electrode has traces of wet carbon, allow it to dry and then clean with a spark plug cleaner.
Air pressure:
Below 588 kPa (6 kgf/cm², 85 psi)
Duration:
20 seconds or less
HINT: If there are traces of oil, remove it with gasoline before using the spark plug cleaner.

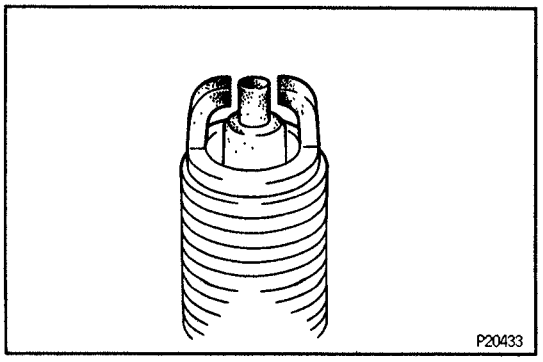

5. VISUALLY INSPECT SPARK PLUGS
Check the spark plug for thread damage and insulator damage.
If abnormal, replace the spark plug.
Recommended spark plug:
ND: K16TR11
NGK: BKR5EKB–11

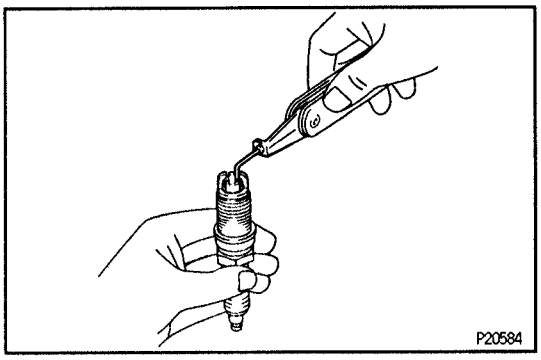

6. **ADJUST ELECTRODE GAP**
   Carefully bend the outer electrode to obtain the correct electrode gap.
   Correct electrode gap: 1.1 mm (0.043 in.)
7. **REINSTALL SPARK PLUGS**
   Torque: 18 N·m (180 kgf·cm, 13 ft·lbf)
8. **REINSTALL IGNITION COILS**
   (See ignition coils installation)
9. **RECONNECT HIGH–TENSION CORDS**
   (See steps 5 to 7 in high–tension cords inspection)

IGQJ9-01

IGNITION COIL INSPECTION

IG

NOTICE: "Cold" and "Hot" in these sentences express the temperature of the coils themselves. "Cold" is from –10°C (14°F) to 50°C (122°F) and "Hot" is from 50°C (122°F) to 100°C (212°F).

1. **REMOVE AIR CLEANER CAP AND MAF METER ASSEMBLY**
2. **DISCONNECT HIGH–TENSION CORDS AND IGNITION COIL CONNECTORS FROM IGNITION COILS**
3. **INSPECT PRIMARY COIL RESISTANCE**
   Using an ohmmeter, measure the resistance between the positive (+) and negative (–) terminals.
   Primary coil resistance :
   Cold: 0.67 – 1.05 Ω
   Hot: 0.85 – 1.23 Ω
   If the resistance is not as specified, replace the ignition coil.

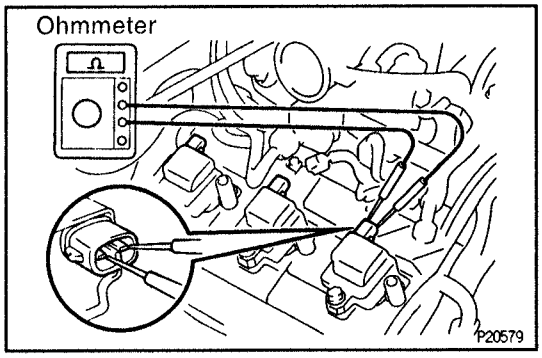

4. **REMOVE IGNITION COILS**
5. **INSPECT SECONDARY COIL RESISTANCE**
   Using an ohmmeter, measure the resistance between the positive (+) and high–tension terminals.
   Secondary coil resistance:
   Cold: 9.3 – 16.0 kΩ
   Hot: 11.7–18.8 kΩ
   If the resistance is not as specified, replace the ignition coil.

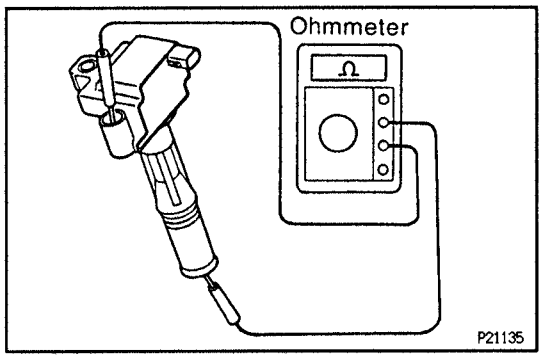

6. **REINSTALL IGNITION COILS**
7. **RECONNECT IGNITION COIL CONNECTORS AND HIGH–TENSION CORDS**
8. **REINSTALL AIR CLEANER CAP AND MAF METER ASSEMBLY**

IG0JA–01

CAMSHAFT POSITION SENSOR INSPECTION

NOTICE: "Cold" and "Hot" in these sentences express the temperature of the sensors themselves. "Cold" is from – 10°C (14°F) to 50°C (122°F) and "Hot" is from 50°C (122 °F) to 100°C (212°F).

1. **DISCONNECT CAMSHAFT POSITION SENSOR CONNECTOR**
2. **INSPECT CAMSHAFT POSITION SENSOR RESISTANCE**

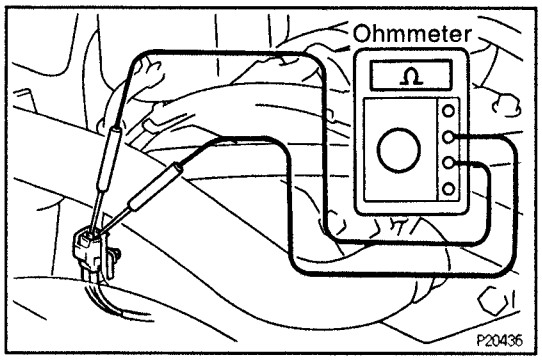

Using an ohmmeter, measure the resistance between terminals.

Resistance:

Cold: 835 – 1,400Ω

Hot: 1,060 – 1,645 Ω

If the resistance is not as specified, replace the camshaft position sensor.

3. **RECONNECT CAMSHAFT POSITION SENSOR CONNECTOR**

IG

IG0JB–01

IGNITER INSPECTION

(See procedure Spark Test in on–vehicle inspection)

IGNITION COIL

COMPONENTS FOR REMOVAL AND INSTALLATION

IG0GJ–03

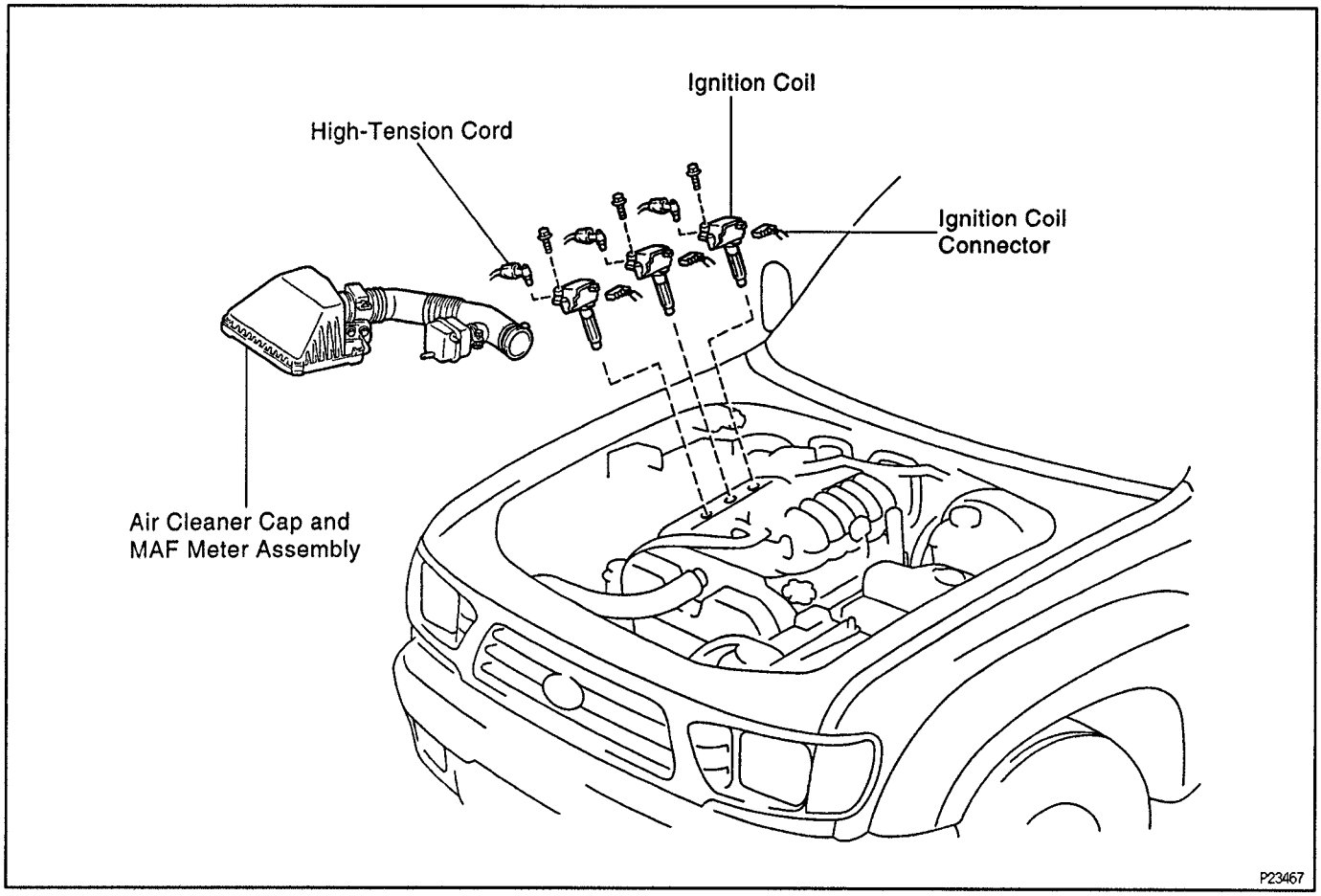

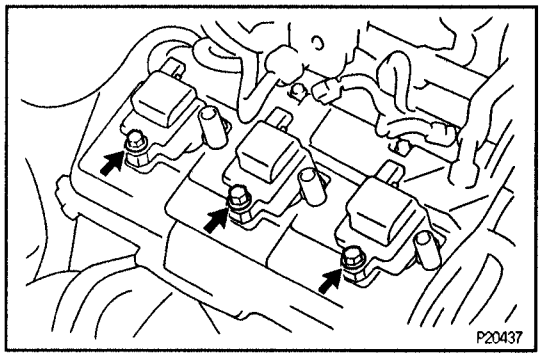

IGNITION COILS REMOVAL

IG0GK–02

1. **REMOVE AIR CLEANER CAP AND MAF METER ASSEMBLY**
2. **DISCONNECT HIGH–TENSION CORDS FROM IGNITION COILS**
   (See steps 1 to 3 in high–tension cords inspection)
3. **REMOVE IGNITION COILS**

(a) Disconnect the 3 connectors from the ignition coils.

(b) Remove the 3 bolts and 3 ignition coils from the LH cylinder head.
Torque: 7.8 N·m (80 kgf·cm, 69 in.·lbf)
HINT: Arrange the ignition coils in correct order.

IGNITION COILS INSTALLATION

IG0JC–01

Installation is in the reverse order of removal.

CAMSHAFT POSITION SENSOR

IG0SY–0E

COMPONENTS FOR REMOVAL AND INSTALLATION

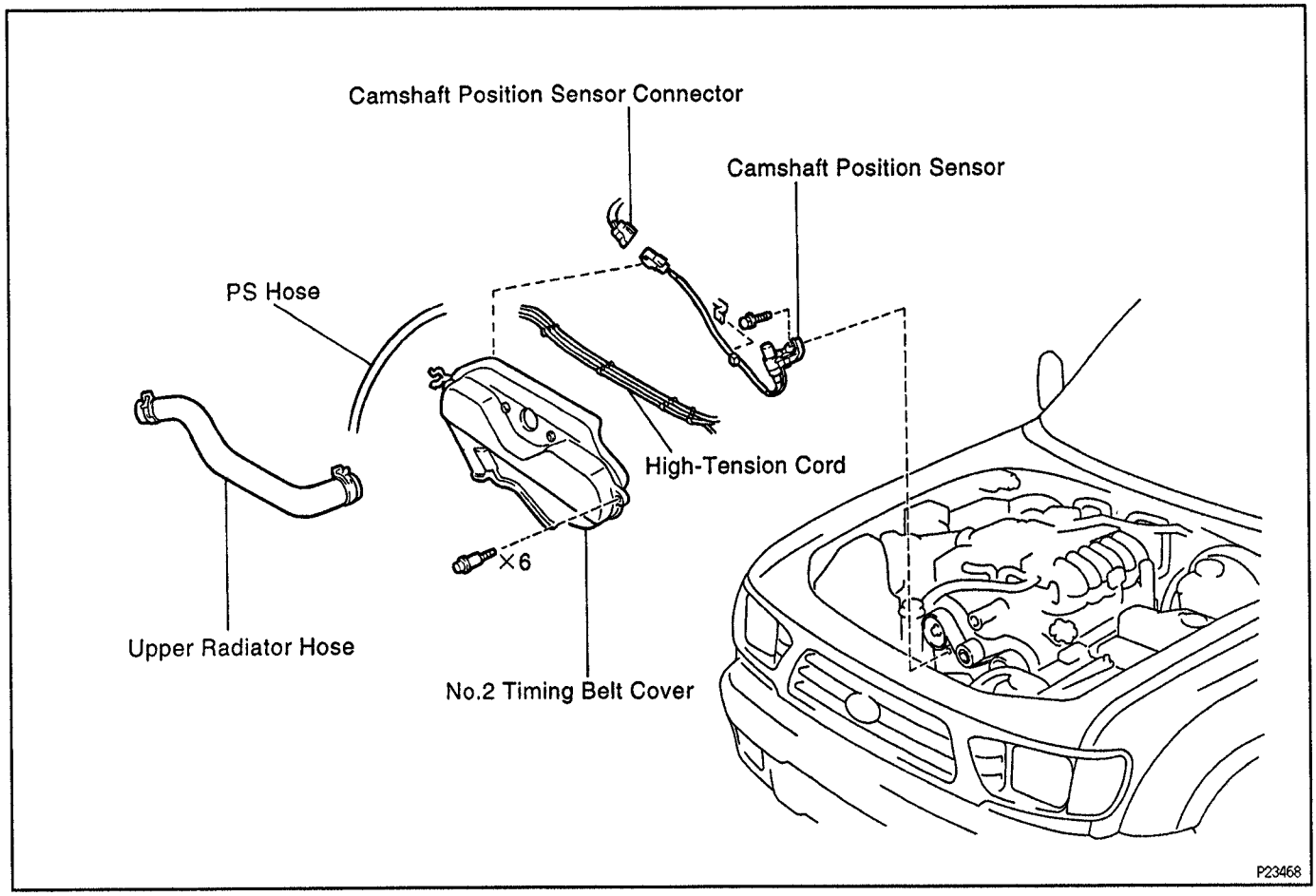

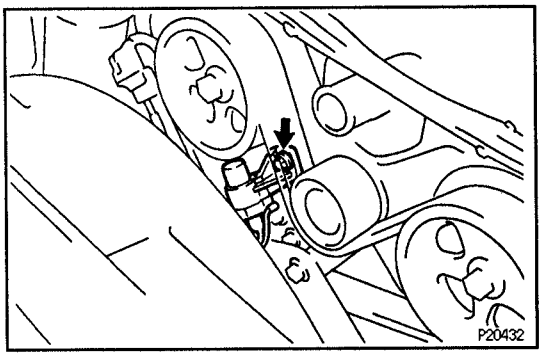

CAMSHAFT POSITION SENSOR REMOVAL

IG0GM–03

1. **REMOVE NO.2 TIMING BELT COVER (See steps 2, 3, 12 and 13 timing belt removal in Engine Mechanical)**
2. **REMOVE CAMSHAFT POSITION SENSOR**

(a) Disconnect the camshaft position sensor connector.

(b) Remove the bolts and camshaft position sensor.
Torque: 7.8 N·m (80 kgf·cm, 69 in.·lbf)

IG0JD–01

CAMSHAFT POSITION SENSOR INSTALLATION

Installation is in the reverse order of removal.

CRANKSHAFT POSITION SENSOR

IG08W-08

COMPONENTS FOR REMOVAL AND INSTALLATION

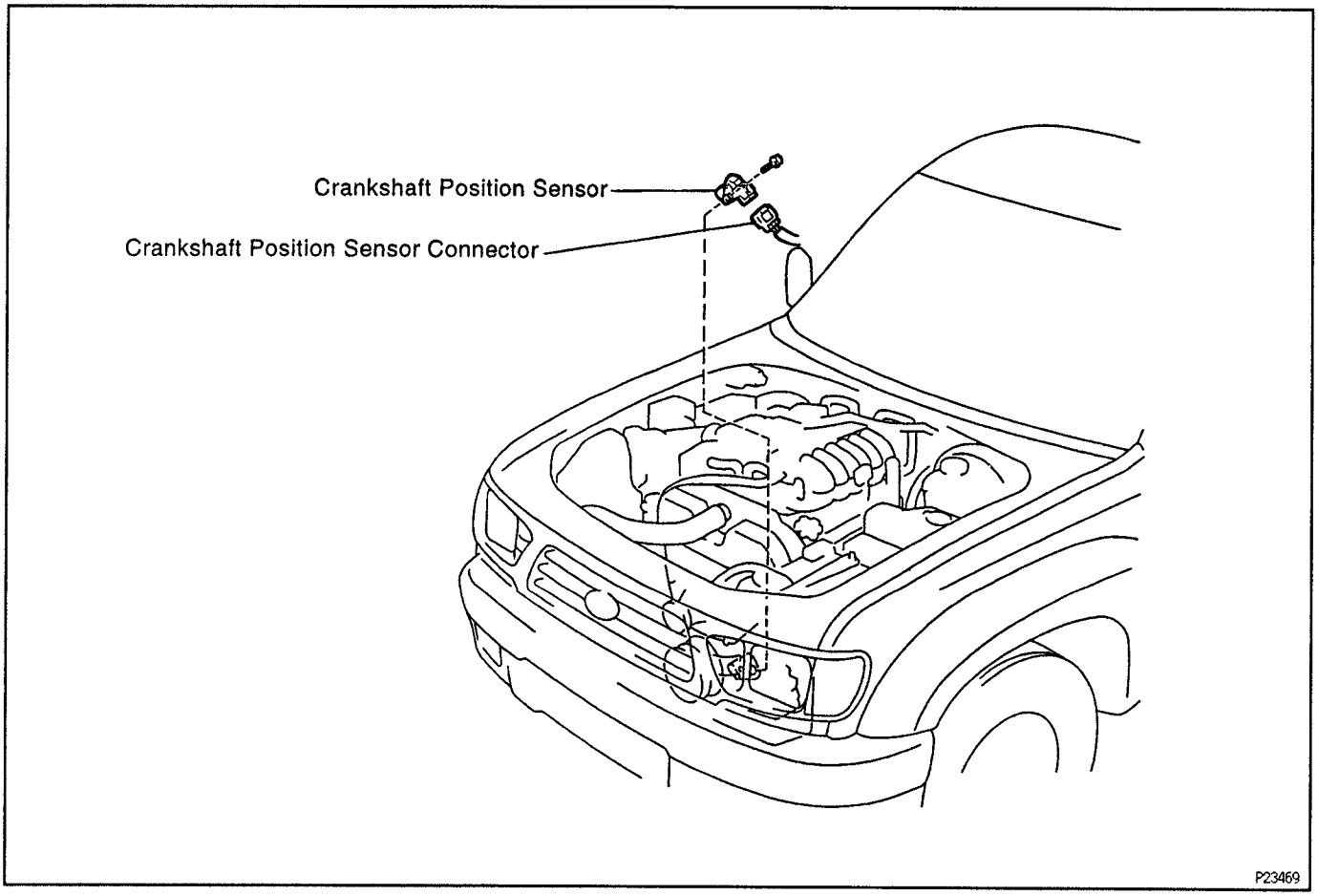

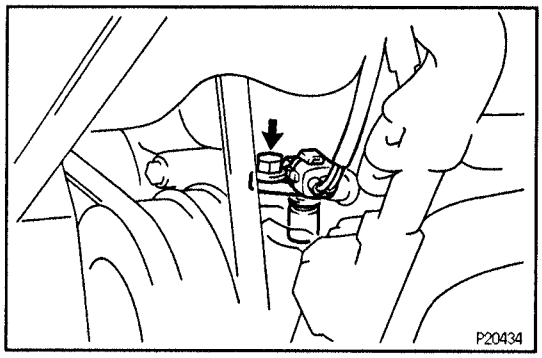

IG0GN-02

CRANKSHAFT POSITION SENSOR REMOVAL

REMOVE CRANKSHAFT POSITION SENSOR

(a) Disconnect the crankshaft position sensor connector.
(b) Remove the bolt crankshaft position sensor.
Torque: 7.8 N·m (80 kgf·cm, 69 in.·lbf)

IG0GP-02

CRANKSHAFT POSITION SENSOR INSPECTION

NOTICE: "Cold" and "Hot" in these sentences express the temperature of the sensors themselves. "Cold" is from – 10°C (14°F) to 50°C (122°F) and "Hot is from 50°C (122° F) to 100°C (212°F).

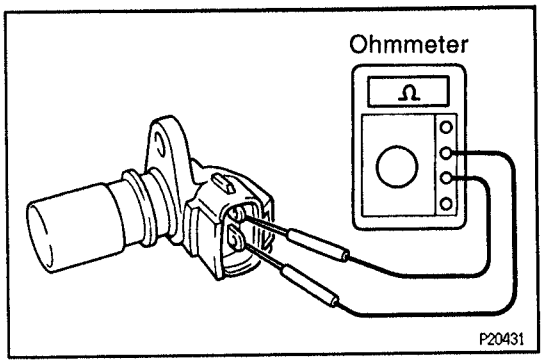

INSPECT CRANKSHAFT POSITION SENSOR RESISTANCE

Using an ohmmeter, measure the resistance between terminals.

Resistance:

Cold: 1,630 – 2,740 Ω

Hot: 2,065 – 3,225 Ω

If the resistance is not as specified, replace the crankshaft position sensor.

IGOJE–01

CRANKSHAFT POSITION SENSOR INSTALLATION

Installation is in the reverse order of removal.

IG

SERVICE SPECIFICATIONS

IGO32–0K

SERVICE DATA

High–tension cord	Resistance		Maximum	25 kΩ per cord
Spark plug	Recommended spark plug		ND	K16TR11
			NGK	BKR5EKB–11
	Correct electrode gap			1.1 mm (0.043 in.)
Ignition coil	Resistance	Primary	at cold	0.67 – 1.05 Ω
			at hot	0.85 – 1.23 Ω
		Secondary	at cold	9.3 –16.0 kΩ
			at hot	11.7 – 18.8 kΩ
Camshaft position sensor	Resistance		at cold	835 – 1,400 Ω
			at hot	1,060 – 1,645 Ω
Crankshaft position sensor	Resistance		at cold	1,630 – 2,740 Ω
			at hot	2,065 – 3,225 Ω

IGO2F–0H

TORQUE SPECIFICATIONS

Part tightened	N·m	kgf·cm	ft·lbf
Spark plug x Cylinder head	18	180	13
Ignition coil x Cylinder head	7.8	80	69 in.·lbf
Camshaft position sensor x Cylinder head	7.8	80	69 in.·lbf
Crankshaft position sensor x Oil pump	7.8	80	69 in.·lbf

IG

STARTING SYSTEM

(2RZ–FE, 3RZ–FE)
PREPARATION ..... ST– 2
ON–VEHICLE INSPECTION ..... ST– 2
STARTER ..... ST– 3
STARTER RELAY ..... ST– 14
SERVICE SPECIFICATIONS ..... ST– 15
(5VZ–FE)
PREPARATION ..... ST– 16
ON–VEHICLE INSPECTION ..... ST– 16
STARTER ..... ST– 17
STARTER RELAY ..... ST– 27
SERVICE SPECIFICATIONS ..... ST– 28

(2RZ–FE, 3RZ–FE)

PREPARATION

SST (SPECIAL SERVICE TOOLS)

ST00S–0T

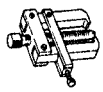	09286–46011	Injection Pump Spline Shaft Puller	Armature bearing
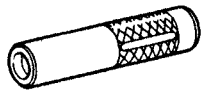	09201–41020	Valve Stem Oil Seal Replacer	Armature rear bearing
	09285–76010	Injection Pump Camshaft Bearing Cone Replacer	Armature rear bearing
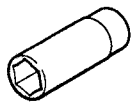	09810–38140	Starter Magnet Switch Nut Wrench 14	Terminal nut

ST

RECOMMENDED TOOLS

ST00T–0J

	09082–00050	TOYOTA Electrical Tester Set.

EQUIPMENT

ST00U–0E

Dial indicator	Commutator
Magnetic finger	
Pull scale	Brush spring
Sandpaper	Commutator
Torque wrench	
V–block	
Vernier calipers	Commutator, Brush

ON–VEHICLE INSPECTION

ST05K–0M

NOTICE: Before changing the starter, check the following items again:

- **Connector connection**
- **Accessory installation, e.g.: theft deterrent system**

STARTER

ST08Z–01

COMPONENTS FOR REMOVAL AND INSTALLATION

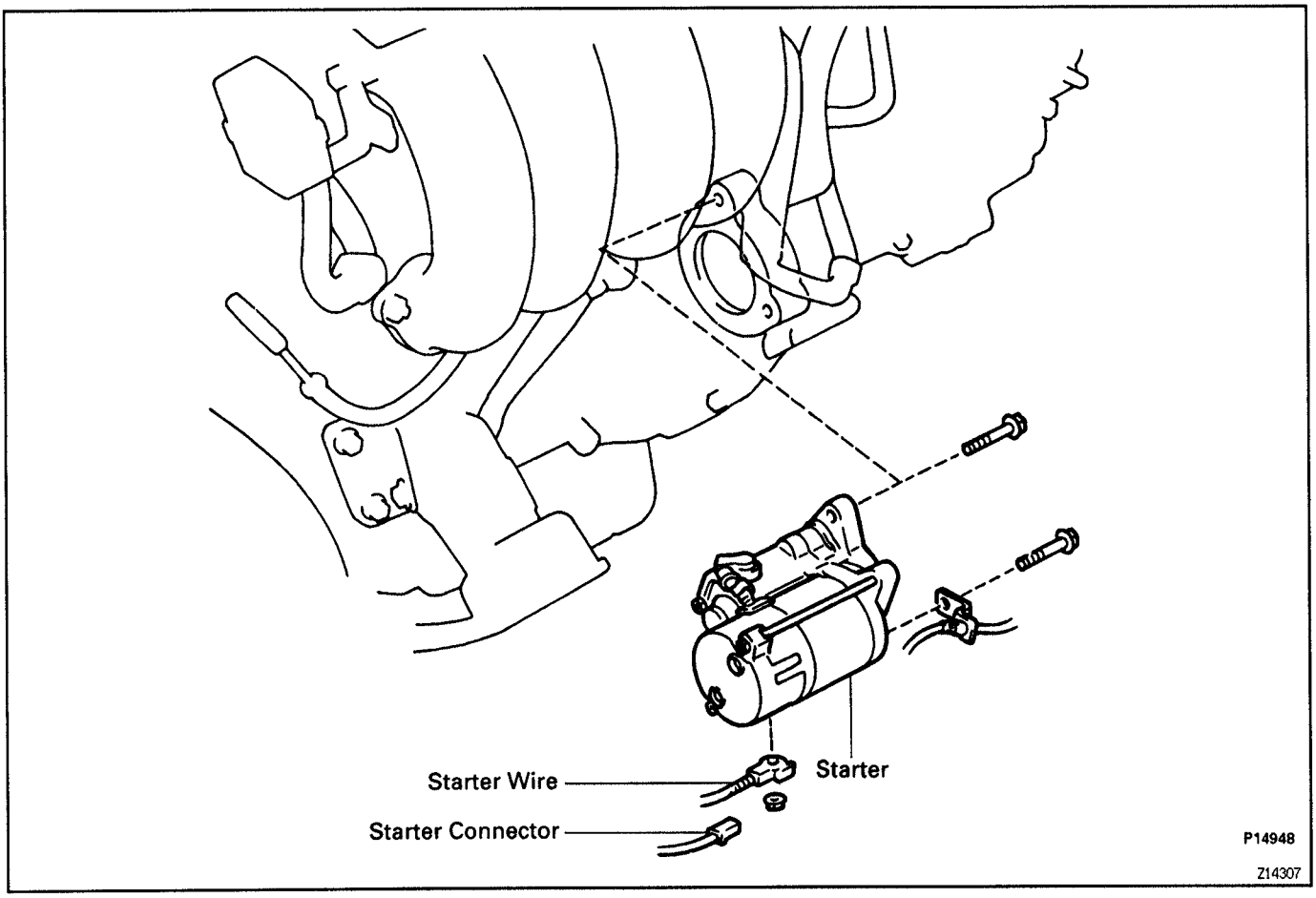

ST

ST066–05

STARTER REMOVAL

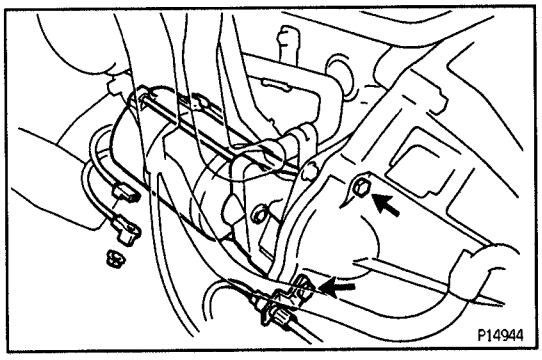

REMOVE STARTER

(a) Disconnect the starter connector.

(b) Remove the nut and disconnect the starter wire.
Torque: 8.8 N·m (90 kgf·cm, 78 in.·lbf)

(c) Remove the 2 bolts and starter.
Torque: 39 N·m (400 kgf·cm, 29 ft·lbf)

COMPONENTS FOR DISASSEMBLY AND ASSEMBLY

ST0DA–01

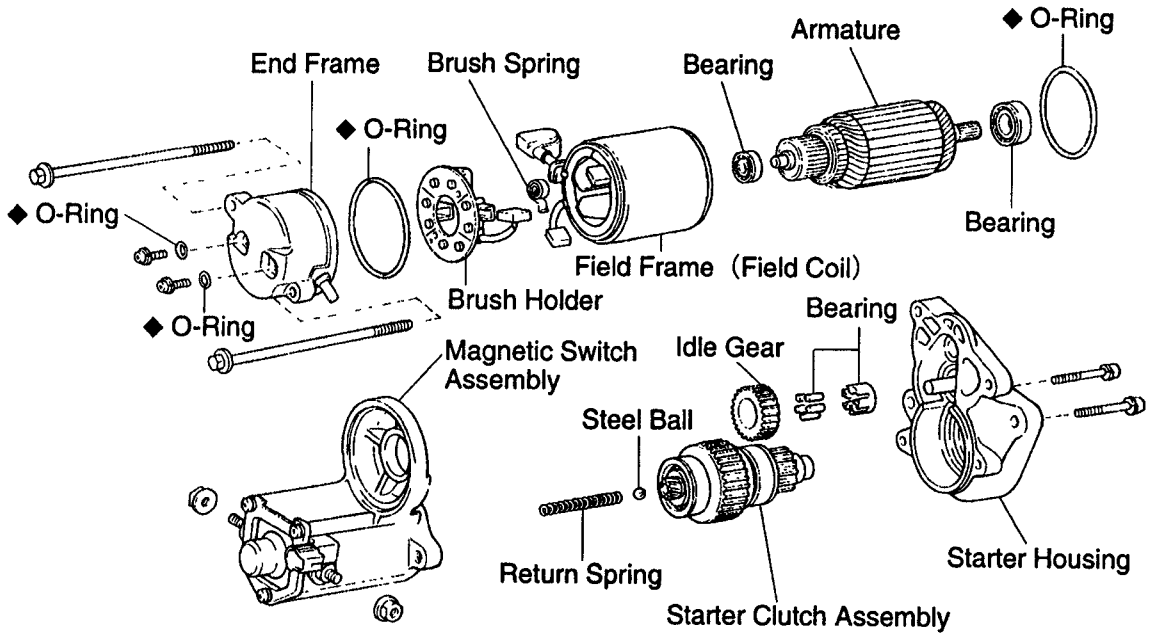

Magnetic Switch Assembly

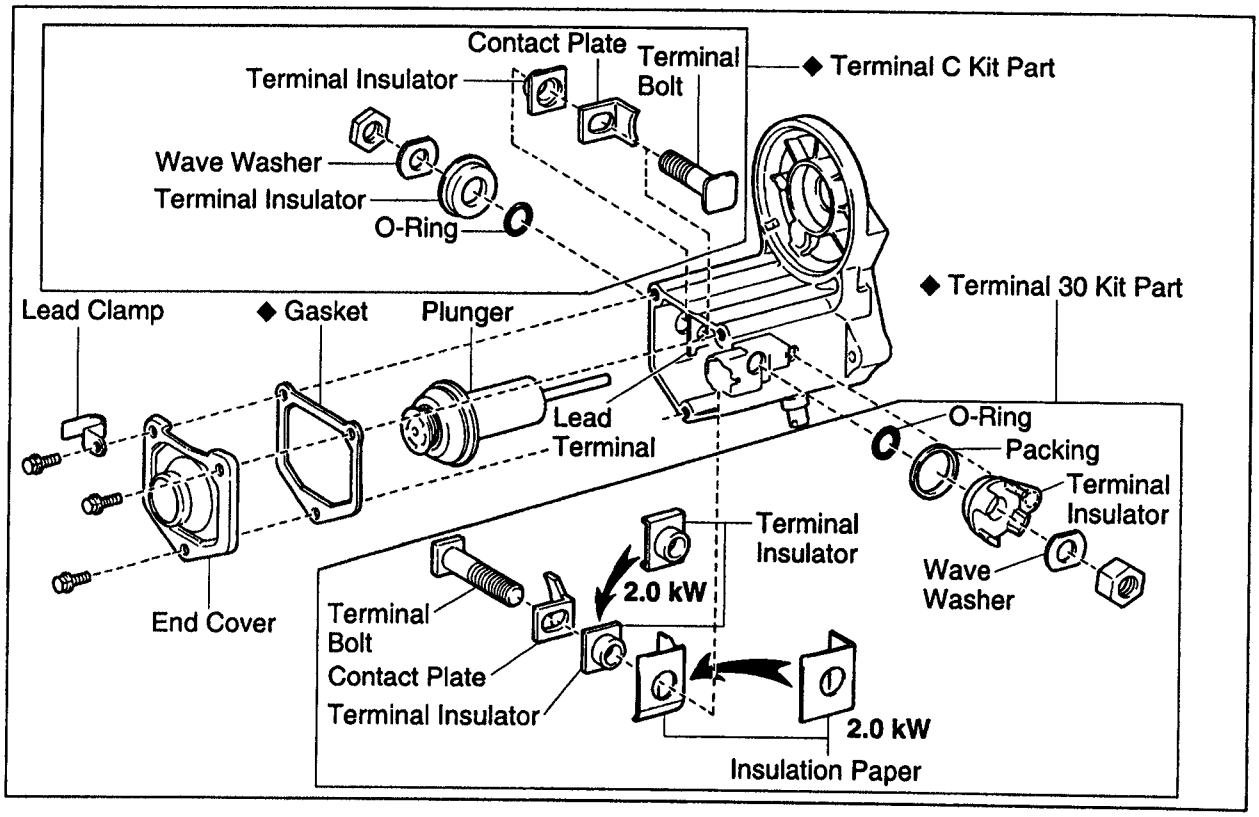

P23129
P25132

◆ Non-reusable part

Z16636

ST007–04

STARTER DISASSEMBLY

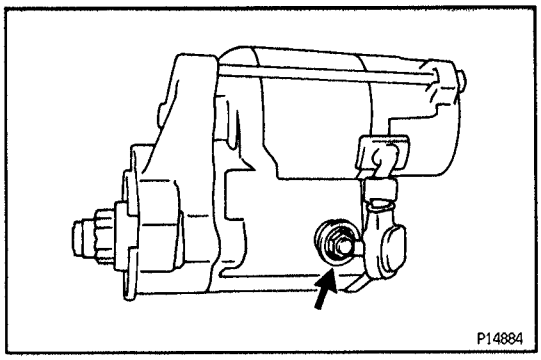

1. REMOVE FIELD FRAME AND ARMATURE

(a) Remove the nut and disconnect the lead wire from the magnetic switch terminal.
Torque: 5.9 N·m (60 kgf·cm, 52 in.·lbf)

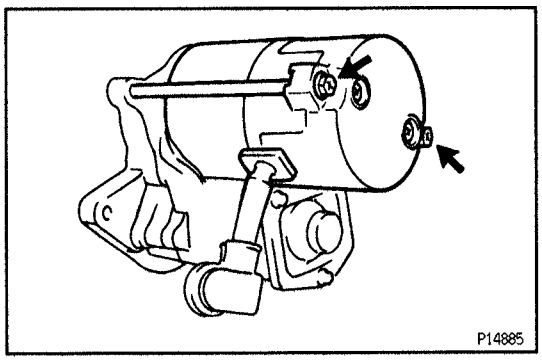

(b) Remove the 2 through bolts.
Torque:
1.4 kW type:
5.9 N·m (60 kgf·cm, 52 in.·lbf)
2.0 kW type:
9.3 N·m (93 kgf·cm, 82 in.·lbf)

(c) Pull out the field frame with the armature from the magnetic switch assembly.

(d) Remove the O–ring.
ASSEMBLY HINT:
- Use a new O–ring.
- Align the protrusion of the field frame with the cutout of the magnetic switch.

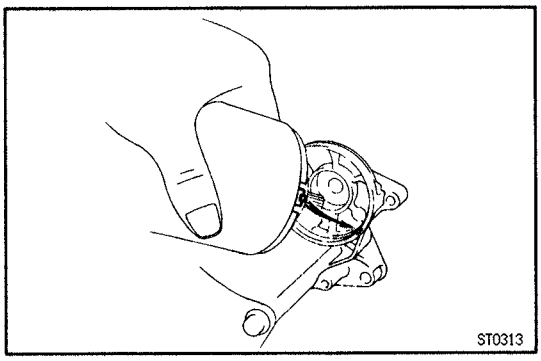

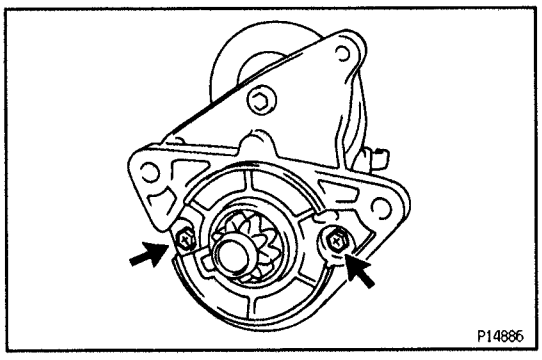

2. REMOVE STARTER HOUSING, CLUTCH ASSEMBLY AND GEAR

(a) Remove the 2 screws.
Torque:
1.4 kW type:
5.9 N·m (60 kgf·cm, 52 in.·lbf)
2.0 kW type:
9.3 N·m (93 kgf·cm, 82 in.·lbf)

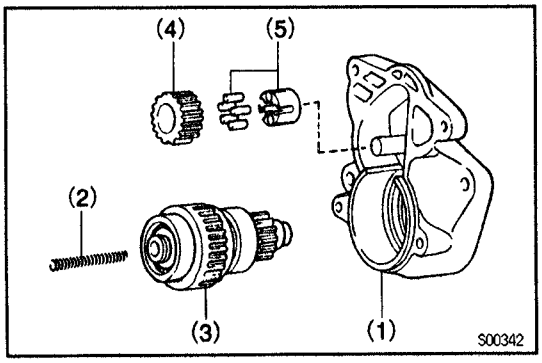

(b) Remove these parts from the magnetic switch assembly:
(1) Starter housing
(2) Return spring
(3) Clutch assembly
(4) Idler gear
(5) Bearing

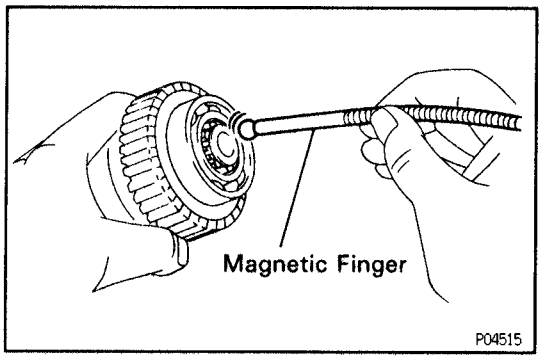

3. REMOVE STEEL BALL

Using a magnetic finger, remove the steel ball from the clutch shaft hole.

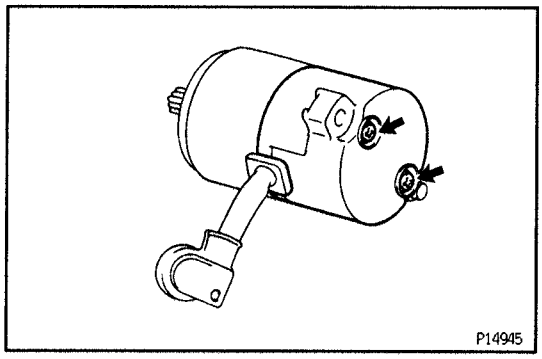

4. REMOVE BRUSH HOLDER

(a) Remove the 2 screws and end cover from the field frame.

Torque:

1.4 kW type:

1.5 N·m (15 kgf·cm, 13 in.·lbf)

2.0 kW type:

3.8 N·m (38 kgf·cm, 34 in.·lbf)

(b) Remove the O–ring from the field frame.

ASSEMBLY HINT: Use a new O–ring.

(c) Using a screwdriver, hold the spring back and disconnect the brush from the brush holder. Disconnect the 4 brushes and remove the brush holder.

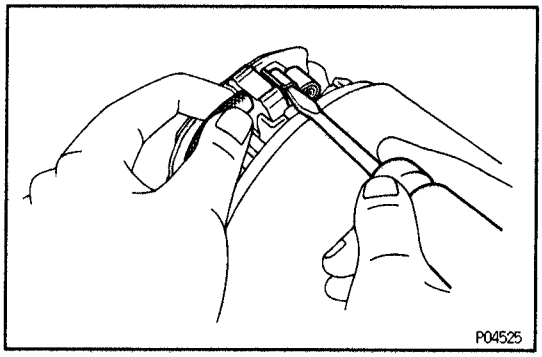

5. REMOVE ARMATURE FROM FIELD FRAME

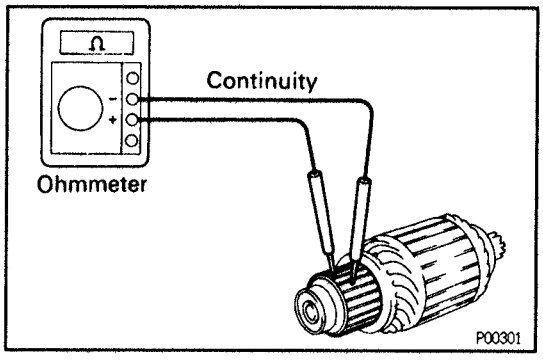

STARTER INSPECTION AND REPAIR

ST0DW–01

Armature Coil

1. INSPECT COMMUTATOR FOR OPEN CIRCUIT

Using an ohmmeter, check that there is continuity between the segments of the commutator.

If there is no continuity between any segment, replace the armature.

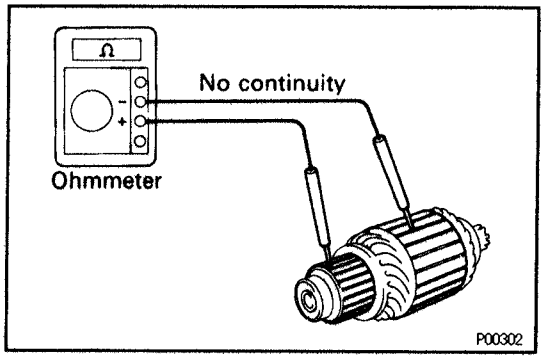

2. INSPECT COMMUTATOR FOR GROUND

Using an ohmmeter, check that there is no continuity between the commutator and armature coil core.

If there is continuity, replace the armature.

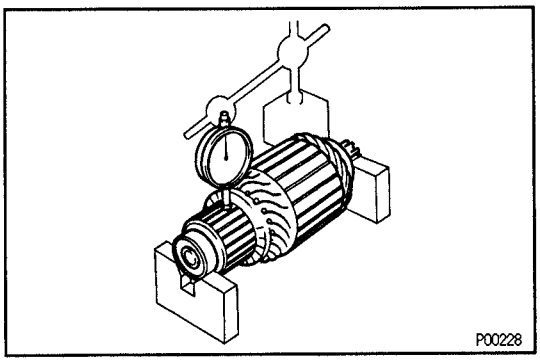

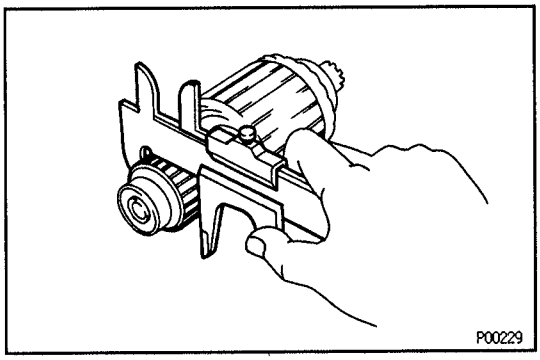

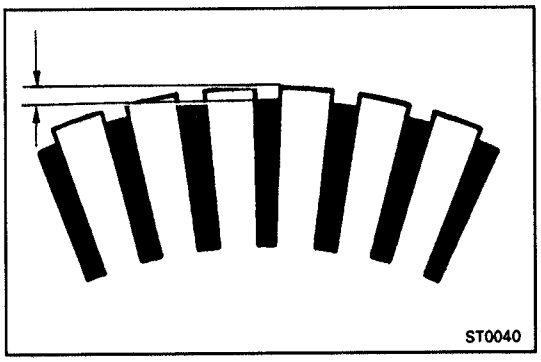

Commutator

1. **INSPECT COMMUTATOR FOR DIRTY AND BURNT SURFACES**

   If the surface is dirty or burnt, correct it with sandpaper (No. 400) or on a lathe.

2. **INSPECT COMMUTATOR CIRCLE RUNOUT**

(a) Place the commutator on V–blocks.

(b) Using a dial indicator, measure the circle runout.

Maximum circle runout:

0.05 mm (0.0020 in.)

If the circle runout is greater than the maximum, correct it on a lathe.

3. **INSPECT COMMUTATOR DIAMETER**

Using vernier calipers, measure the commutator diameter.

Standard diameter:

1.4 kW type: 30 mm (1.18 in.)

2.0 kW type: 35 mm (1.38 in.)

Minimum diameter:

1.4 kW type: 29 mm (1.14 in.)

2.0 kW type: 34 mm (1.34 in.)

If the diameter is less than the minimum, replace the armature.

4. **INSPECT UNDERCUT DEPTH**

Check that the undercut depth is clean and free of foreign materials. Smooth out the edge.

Standard undercut depth:

1.4 kW type: 0.6 mm (0.024 in.)

2.0 kW type: 0.7 mm (0.028 in.)

Minimum undercut depth:

0.2 mm (0.008 in.)

If the undercut depth is less than the minimum, correct it with a hacksaw blade.

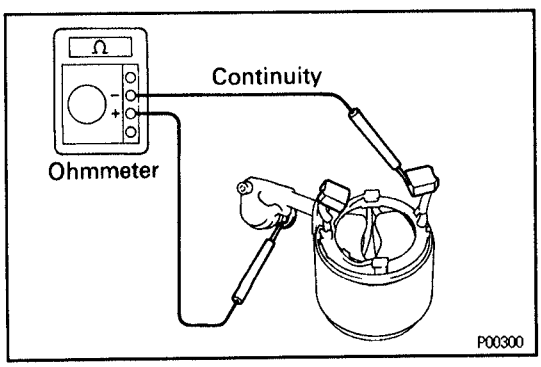

Field Frame (Field Coil)

1. **INSPECT FIELD COIL FOR OPEN CIRCUIT**

Using an ohmmeter, check that there is continuity between the lead wire and field coil brush lead.

If there is no continuity, replace the field frame.

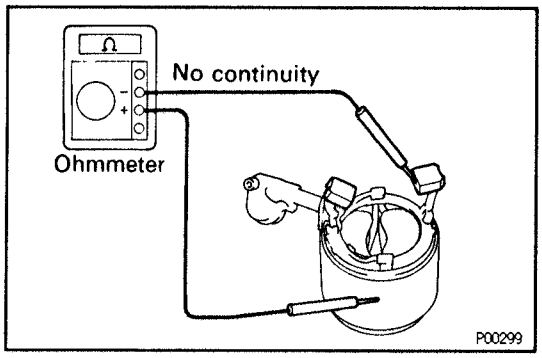

2. **INSPECT FIELD COIL FOR GROUND**

Using an ohmmeter, check that there is no continuity between the field coil end and field frame.

If there is continuity, repair or replace the field frame.

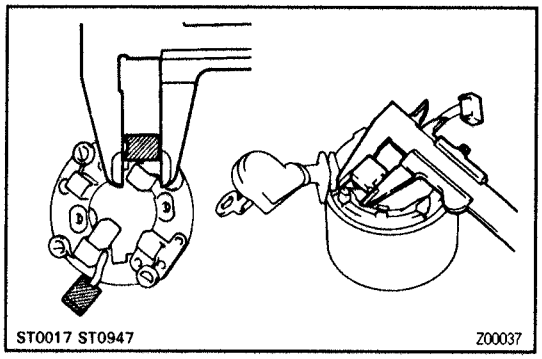

Brushes

INSPECT BRUSH LENGTH

Using vernier calipers, measure the brush length.

Standard length:

1.4 kW type: 15.5 mm (0.610 in.)

2.0 kW type: 15.0 mm (0.591 in.)

Minimum length:

1.4 kW type: 10.0 mm (0.394 in.)

2.0 kW type: 9.0 mm (0.355 in.)

If the length is less than the minimum, replace the brush holder and field frame.

Brush Springs

INSPECT BRUSH SPRING LOAD

Take the pull scale reading the instant the brush spring separates from the brush.

Spring installed load:

1.4 kW type:

17.6 – 23.5 N (1.79 – 2.41 kgf, 3.9 – 5.3 lbf)

2.0 kW type:

21.5 – 27.5 N (2.19 – 2.81 kgf, 4.9 – 6.2 lbf)

Minimum spring installed load:

1.4 kW type: 11.8 N (1.2 kgf, 2.6 lbf)

2.0 kW type: 12.7 N (1.3 kgf, 2.7 lbf)

If the installed load is not within specification, replace the brush springs.

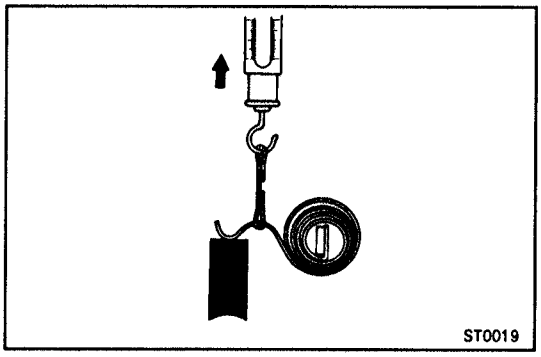

Brush Holder

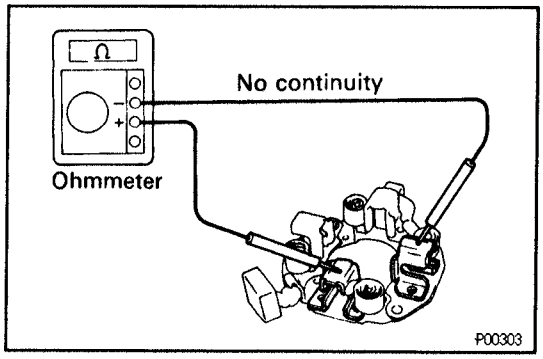

INSPECT BRUSH HOLDER INSULATION

Using an ohmmeter, check that there is no continuity between the positive (+) and negative (–) brush holders.

If there is continuity, repair or replace the brush holder.

Clutch and Gears

1. **INSPECT GEAR TEETH**
Check the gear teeth on the pinion gear, idle gear and clutch assembly for wear or damage.
If damaged, replace the gear or clutch assembly.
If damaged, also check the fly wheel ring gear for wear or damage.

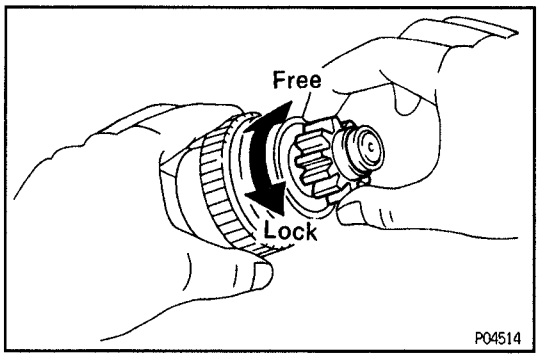

2. **INSPECT CLUTCH PINION GEAR**
Hold the starter clutch and rotate the pinion gear clockwise, and check that it turns freely. Try to rotate the pinion gear counterclockwise and check that it locks.
If necessary, replace the clutch assembly.

Bearings

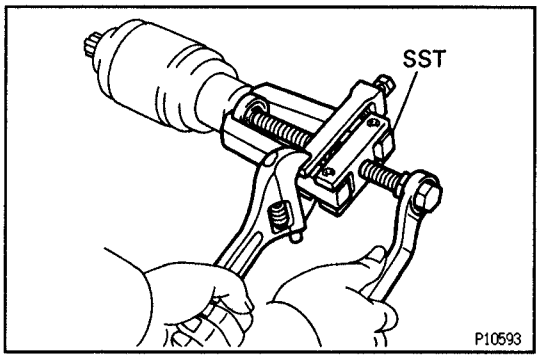

1. **INSPECT FRONT BEARING**
Turn the bearing by hand while applying inward force.
If resistance is felt or the bearing sticks, replace the bearing.
2. **IF NECESSARY, REPLACE FRONT BEARING**
(a) Using SST, remove the bearing.
SST 09286–46011

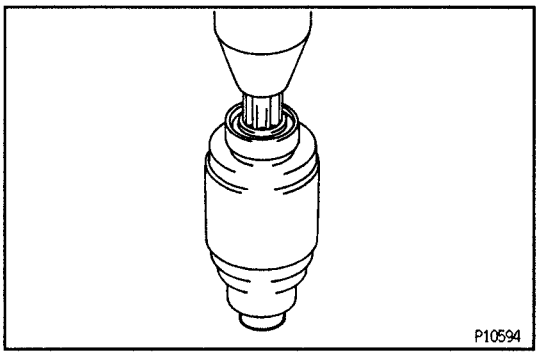

(b) Using a press, press in a new front bearing.

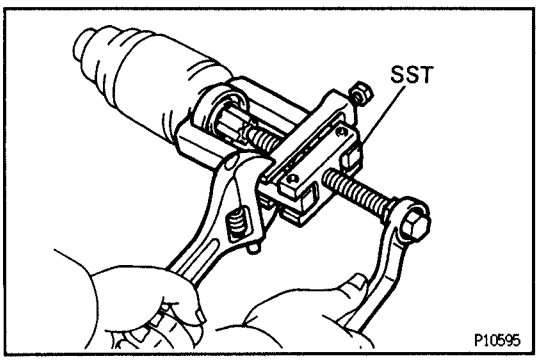

3. **INSPECT REAR BEARING**
Turn the bearing by hand while applying inward force.
If resistance is felt or the bearing sticks, replace the bearing.
4. **IF NECESSARY, REPLACE REAR BEARING**
(a) Using SST, remove the bearing.
SST 09286–46011

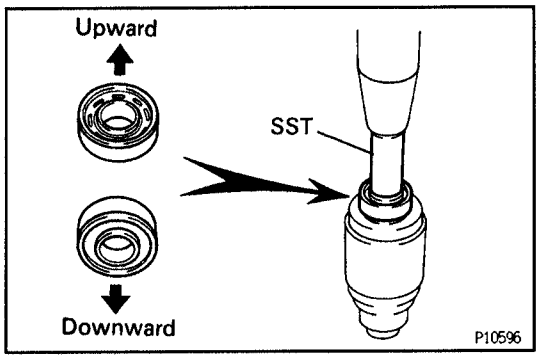

(b) Using a press, press in a new rear bearing.
NOTICE: Be careful of the bearing installation direction.
SST 09201–41020

Magnetic Switch

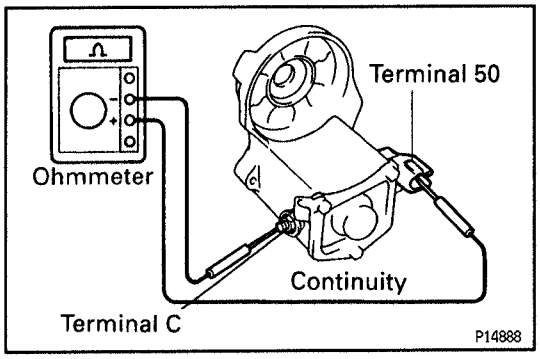

1. DO PULL–IN COIL OPEN CIRCUIT TEST
Using an ohmmeter, check that there is continuity between terminals 50 and C.
If there is no continuity, check and replace the magnetic switch.

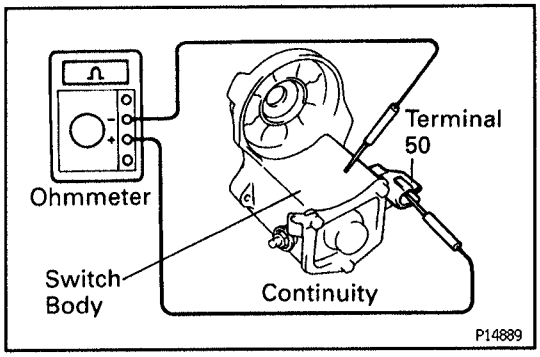

2. DO HOLD–IN COIL OPEN CIRCUIT TEST
Using an ohmmeter, check that there is continuity between terminal 50 and the switch body.
If there is no continuity, replace the magnetic switch.

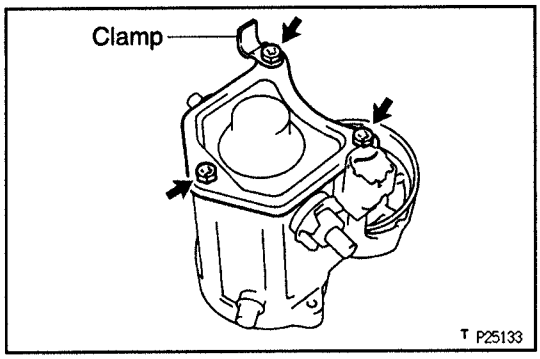

MAGNETIC SWITCH TERMINAL KIT PARTS REPLACEMENT

ST0D8–02

1. REMOVE MAGNETIC SWITCH END COVER
Remove the 3 bolts, lead clamp, end cover, gasket and plunger.

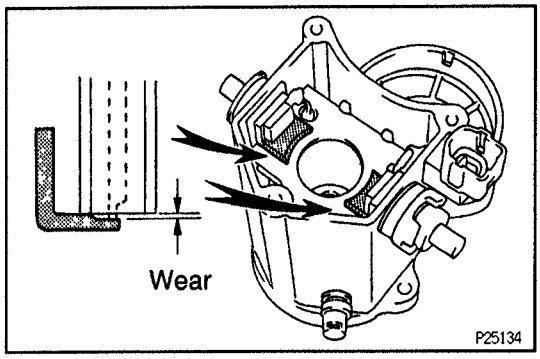

2. INSPECT CONTACT PLATE FOR WEAR
Using vernier calipers, measure the contact plate for depth of wear.
Maximum wear:
0.9 mm (0.035 in.)
If the depth of wear is greater than the maximum, replace the contact plate.

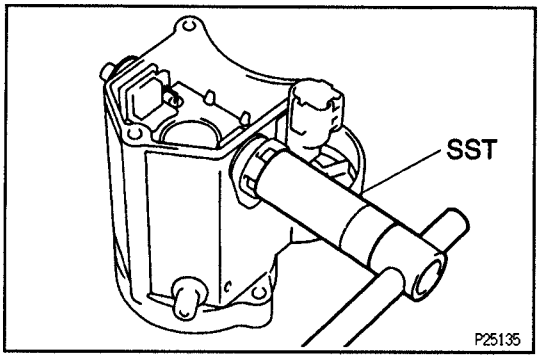

3. REMOVE TERMINAL KIT PARTS

(a) Using SST, loosen the terminal nuts.
SST 09810–38140

(b) Terminal C:
Remove the terminal nut, wave washer, terminal insulator (outside), O–ring, terminal bolt, contact plate and terminal insulator (inside).

(c) Terminal 30:
Remove the terminal nut, wave washer, terminal insulator (outside), packing, O–ring, terminal bolt, contact plate, terminal insulator (inside) and insulation paper.

4. REINSTALL TERMINAL KIT PARTS

(a) Install these new parts:
Terminal 30:
(1) Insulation paper
(2) Terminal insulator (inside)

NOTICE: Be careful to install the terminal insulator in the correct direction.

(3) Contact plate
(4) Terminal bolt
(5) O–ring
(6) Packing and terminal insulator (outside)
Install the packing to the terminal insulator, and install them.

HINT: Match the protrusion of the insulator with the indentation of the housing.

(7) Wave washer
(8) Terminal nut

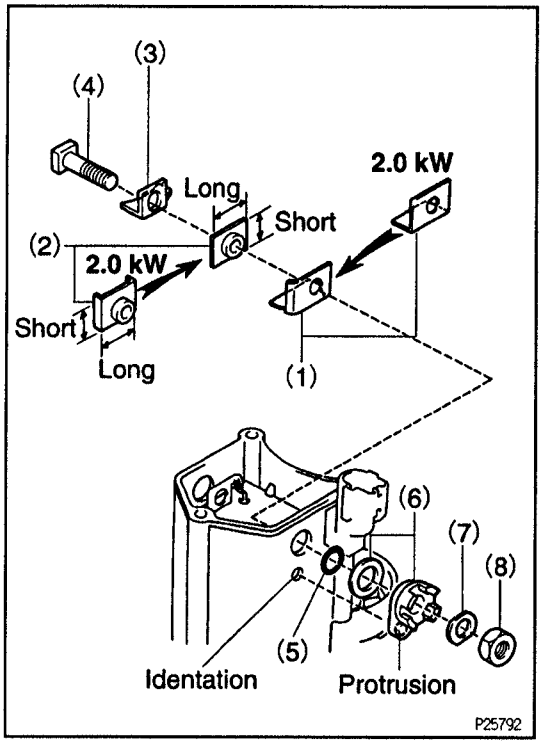

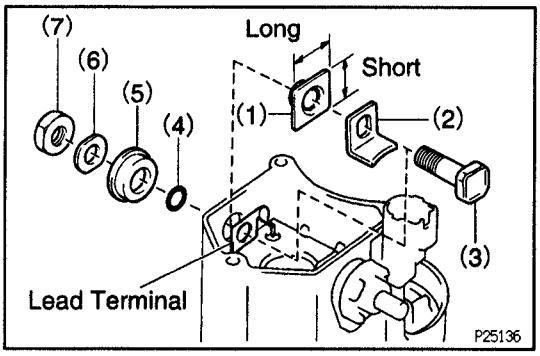

Terminal C:
(1) Terminal insulator (inside)

NOTICE: Be careful to install the terminal insulator in the correct direction.

(2) Contact plate
(3) Terminal bolt
(4) O–ring
(5) Terminal insulator (outside)
(6) Wave washer
(7) Terminal nut

(b) Temporarily tighten the terminal nuts.

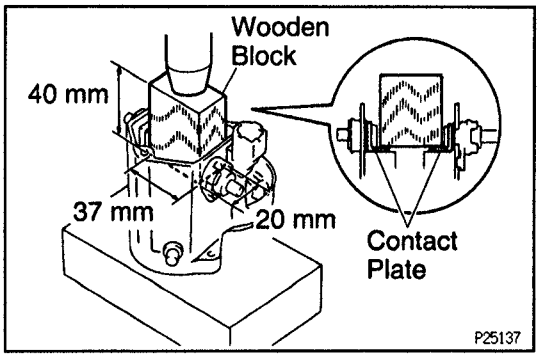

5. TIGHTEN TERMINAL NUT

(a) Put a wooden block on the contact plate and press it down with a hand press.

Dimensions of wooden block:
20 x 37 x 40 mm (0.79 x 1.46 x 1.57 in.)

Press force:
981 N (100 kgf, 221 lbf)

NOTICE:

- **Check the diameter of the hand press ram. Then calculate the gauge pressure of the press when 981 N (100 kgf, 221 lbf) of force is applied.**

Gauge pressure:

$$(kgf/cm^2) = \frac{100\ kgf}{\left(\frac{\text{Ram diameter (cm)}}{2}\right)^2 \times 3.14\ (\pi)}$$

$$(psi) = \frac{221\ lbf}{\left(\frac{\text{Ram diameter (in.)}}{2}\right)^2 \times 3.14\ (\pi)}$$

(kPa) = (kgf/cm²) x 98.1

(kPa) = (psi) x 6.9

VN6796

- **If the contact plate is not pressed down with the specified pressure, the contact plate may tilt due to coil deformation or the tightening of the nut.**

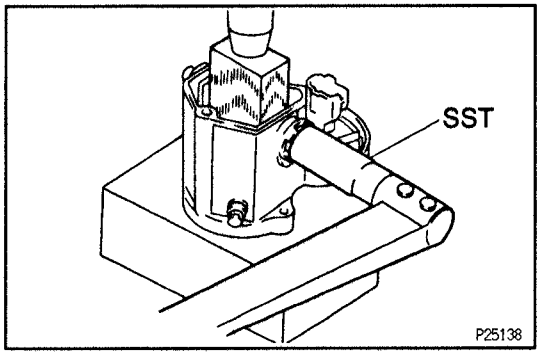

(b) Using SST, tighten the nuts to the specified torque.
SST 09810–38140
Torque: 17 N·m (170 kgf·cm, 12 ft·lbf)
NOTICE: If the nut is over tightened, it may cause cracks on the inside of the insulator.

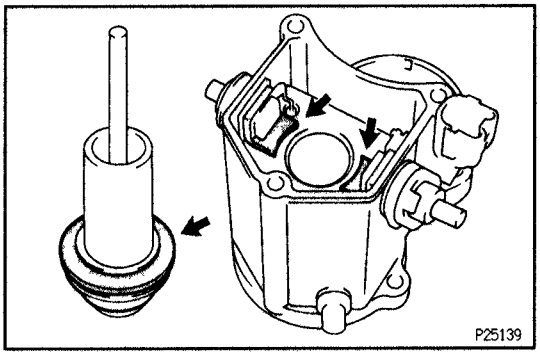

6. CLEAN CONTACT SURFACES OF CONTACT PLATE AND PLUNGER

Clean the contact surfaces of the remaining contact plate and plunger with a dry shop rag.

7. REINSTALL MAGNETIC SWITCH END COVER

Install the plunger, new gasket, end cover and lead clamp with the 3 bolts.

Torque:

1.4 kW type:
2.5 N·m (26 kgf·cm, 23 in.·lbf)

2.0 kW type:
3.6 N·m (37 kgf·cm, 32 in.·lbf)

ST0AA–01

STARTER ASSEMBLY

Assembly is in the reverse order of disassembly.

HINT: Use high–temperature grease to lubricate the bearings and gears when assembling the starter.

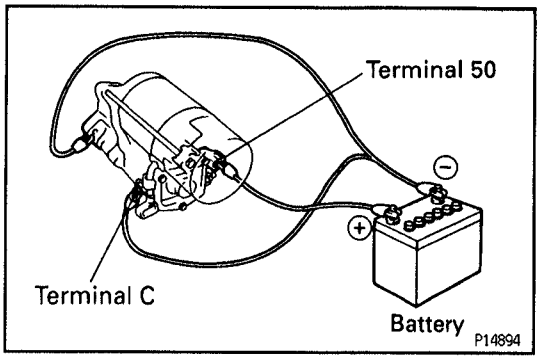

STARTER PERFORMANCE TEST

ST010–14

NOTICE: These tests must be done within 3 to 5 seconds to avoid burning out the coil.

1. DO PULL–IN TEST

(a) Disconnect the field coil lead wire from terminal C.

(b) Connect the battery to the magnetic switch as shown. Check that the clutch pinion gear moves outward.

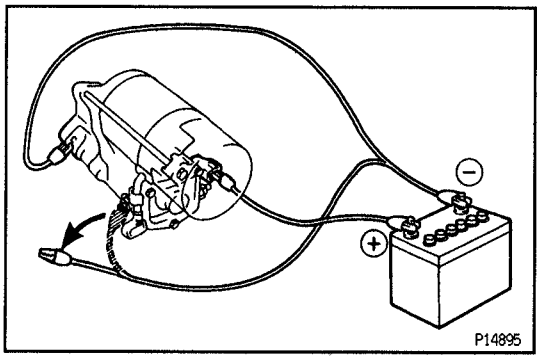

2. DO HOLD–IN TEST

With battery connected as above with the clutch pinion gear out, disconnect the negative (–) lead from terminal C. Check that the pinion gear remains out.

ST

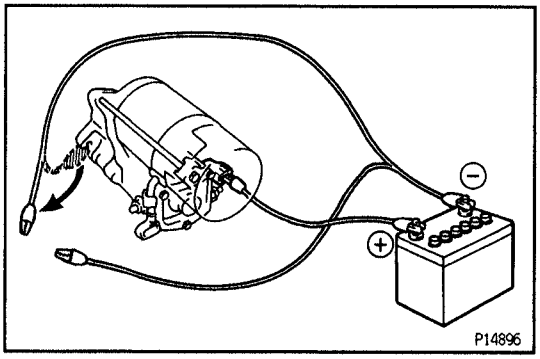

3. INSPECT CLUTCH PINION GEAR RETURN

Disconnect the negative (–) lead from the switch body.

Check that the clutch pinion gear returns inward.

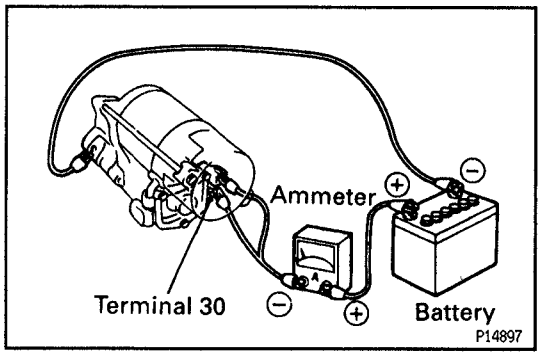

4. DO NO–LOAD PERFORMANCE TEST

(a) Connect the battery and ammeter to the starter as shown.

(b) Check that the starter rotates smoothly and steadily with the pinion gear moving out. Check that the ammeter shows the specified current.

Specified current:

1.4 kW type

At 11.5 V: 90 A or less

2.0 kW type

At 11.5 V: 100 A or less

STARTER INSTALLATION

ST0AB–01

Installation is in the reverse order of removal.

STARTER RELAY
STARTER RELAY INSPECTION

ST000–05

1. **REMOVE STARTER RELAY**
   LOCATION: The relay is located in the junction block on the driver's side.

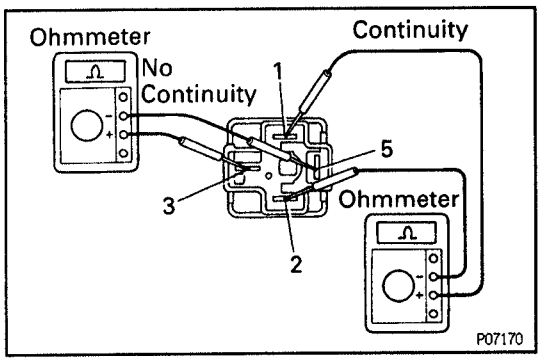

2. **INSPECT STARTER RELAY**

A. Inspect relay continuity

(a) Using an ohmmeter, check that there is continuity between terminals 1 and 2.
If there is no continuity, replace the relay.

(b) Check that there is no continuity between terminals 3 and 5.
If there is continuity, replace the relay.

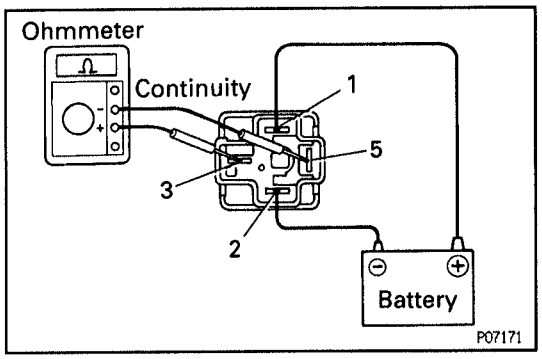

B. Inspect relay operation

(a) Apply battery voltage across terminals 1 and 2.

(b) Using an ohmmeter, check that there is continuity between terminals 3 and 5.
If operation is not as specified, replace the relay.

3. **REINSTALL STARTER RELAY**

SERVICE SPECIFICATIONS

SERVICE DATA

ST015–16

Starter (1.4 kW type)	Rated voltage and output power		12 V 1.4 kW
	No–load characteristics	Current	90 A or less at 11.5 V
		rpm	3,000 rpm or more
	Brush length	STD	15.5 mm (0.610 in.)
		Minimum	10.0 mm (0.394 in.)
	Spring installed load	STD	17.6 – 23.5 N (1.79 – 2.41 kgf, 3.9 – 5.3 lbf)
		Minimum	11.8 N (1.2 kgf, 2.6 lbf)
	Commutator		
	Diameter	STD	30 mm (1.18 in.)
		Minimum	29 mm (1.14 in.)
	Undercut depth	STD	0.6 mm (0.024 in.)
		Minimum	0.2 mm (0.008 in.)
	Circle runout	Maximum	0.05 mm (0.0020 in.)
	Magnetic switch		
	Contact plate for wear	Maximum	0.9 mm (0.035 in.)
Starter (2.0 kW type)	Rated voltage and output power		12 V 2.0 kW
	No–load characteristics	Current	100 A or less at 11.5 V
		rpm	2,500 rpm or more
	Brush length	STD	15.0 mm (0.591 in.)
		Minimum	9.0 mm (0.355 in.)
	Spring installed load	STD	21.5 – 27.5 N (2.19 – 2.81 kgf, 4.9 – 6.2 lbf)
		Minimum	12.7 N (1.3 kgf, 2.7 lbf)
	Commutator		
	Diameter	STD	35 mm (1.38 in.)
		Minimum	34 mm (1.34 in.)
	Undercut depth	STD	0.7 mm (0.028 in.)
		Minimum	0.2 mm (0.008 in.)
	Circle runout	Maximum	0.05 mm (0.0020 in.)
	Magnetic switch		
	Contact plate for wear	Maximum	0.9 mm (0.035 in.)

TORQUE SPECIFICATIONS

ST016–16

Part tightened		N·m	kgf·cm	ft·lbf
Starter mounting bolt		39	400	29
Starter wire mounting nut		8.8	90	78 in.·lbf
Field frame x Armature	1.4 kW type	5.9	60	52 in.·lbf
	2.0 kW type	9.3	93	82 in.·lbf
Starter housing x Clutch assembly	1.4 kW type	5.9	60	52 in.·lbf
	2.0 kW type	9.3	93	82 in.·lbf
End cover x Field frame	1.4 kW type	1.5	15	13 in.·lbf
	2.0 kW type	3.8	38	34 in.·lbf
Lead wire x Terminal C		5.9	60	52 in.·lbf
Terminal nut x Terminal 30 of starter, Terminal C of starter		17	170	12
Magnetic switch end cover x Magnetic switch	1.4 kW type	2.5	26	23 in.·lbf
	2.0 kW type	3.6	37	32 in.·lbf

(5VZ–FE)

PREPARATION

ST03P–07

SST (SPECIAL SERVICE TOOLS)

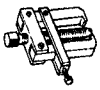	09286–46011	Injection Pump Spline Shaft Puller	Armature bearing
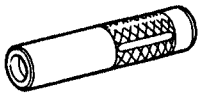	09201–41020	Valve Stem Oil Seal Replacer	Armature front bearing
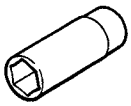	09810–38140	Starter Magnet Switch Nut Wrench 14	Terminal kit

ST03Q–05

RECOMMENDED TOOLS

	09082–00050 TOYOTA Electrical Tester Set.	

ST03R–05

EQUIPMENT

Dial indicator	Commutator
Magnetic finger	Steel ball
Press	Magnetic switch terminal kit
Pull scale	Brush spring
Sandpaper	Commutator
Torque wrench	
V–block	Commutator
Vernier calipers	Commutator, Brush

ON–VEHICLE INSPECTION

ST05K–ON

NOTICE: Before changing the starter, check these items again:

- **Connector connection**
- **Accessory installation, e.g.: theft deterrent system**

STARTER

ST00A–03

COMPONENTS FOR REMOVAL AND INSTALLATION

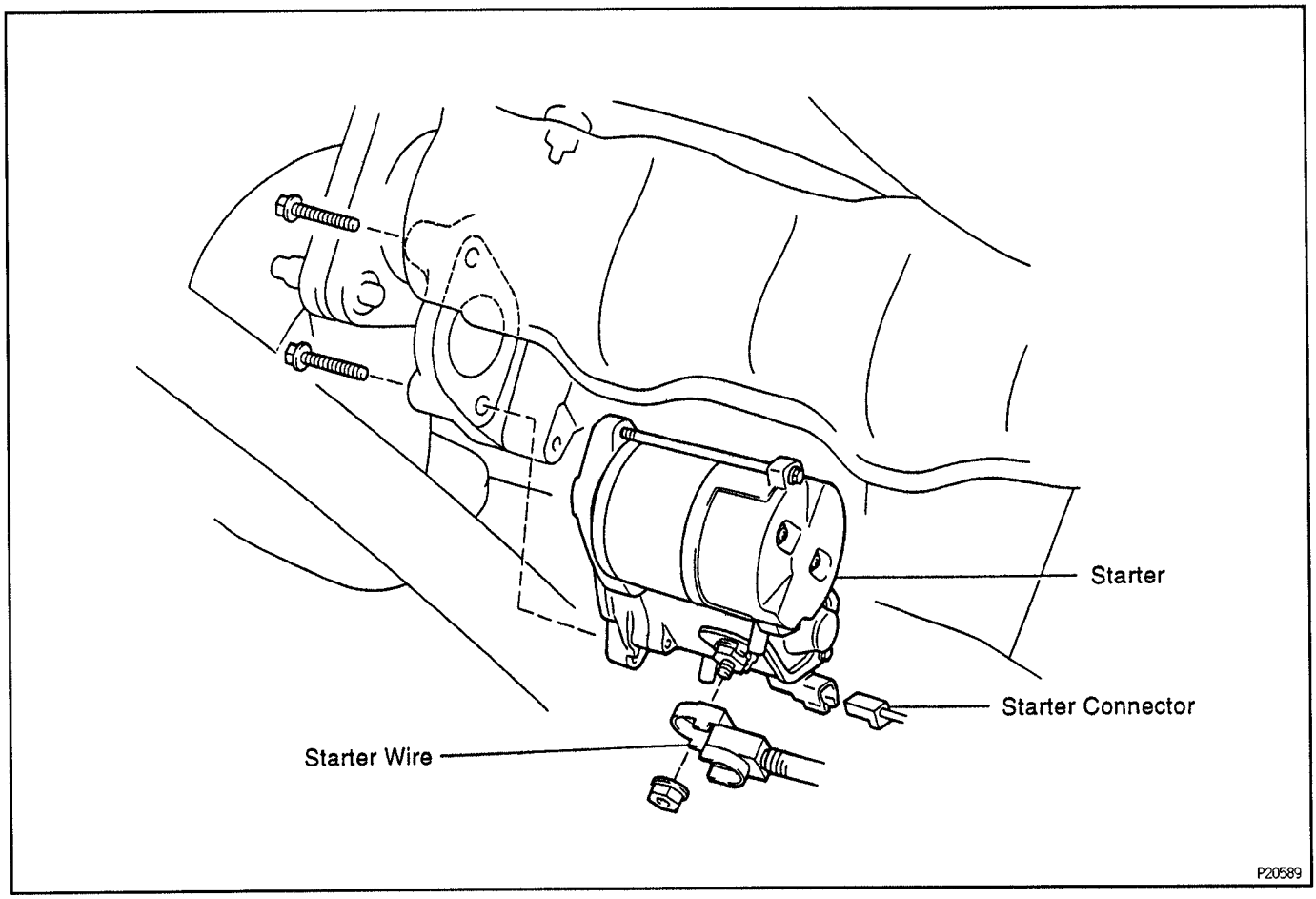

ST00B–03

STARTER REMOVAL

REMOVE STARTER

(a) Disconnect the starter connector.

(b) Remove the nut and disconnect the starter wire.
Torque: 8.8 N·m (90 kgf·cm, 70 in.·lbf)

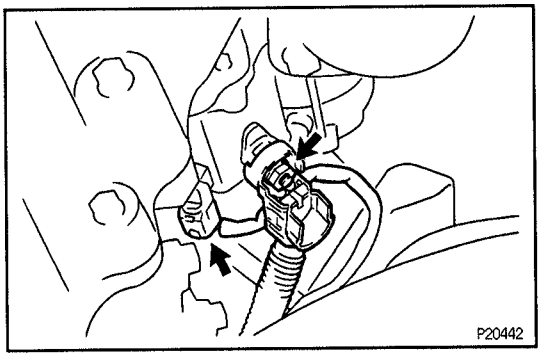

(c) Remove the 2 bolts and starter.
Torque: 39 N·m (400 kgf·cm, 29 ft·lbf)

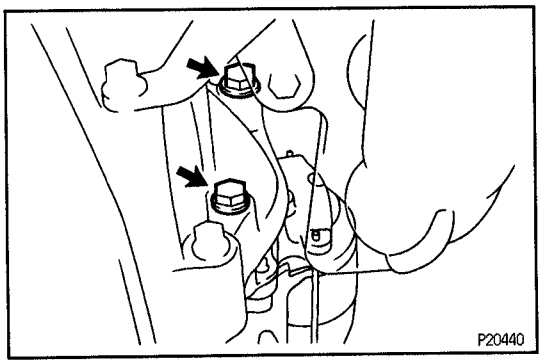

COMPONENTS FOR DISASSEMBLY AND ASSEMBLY

ST03T–06

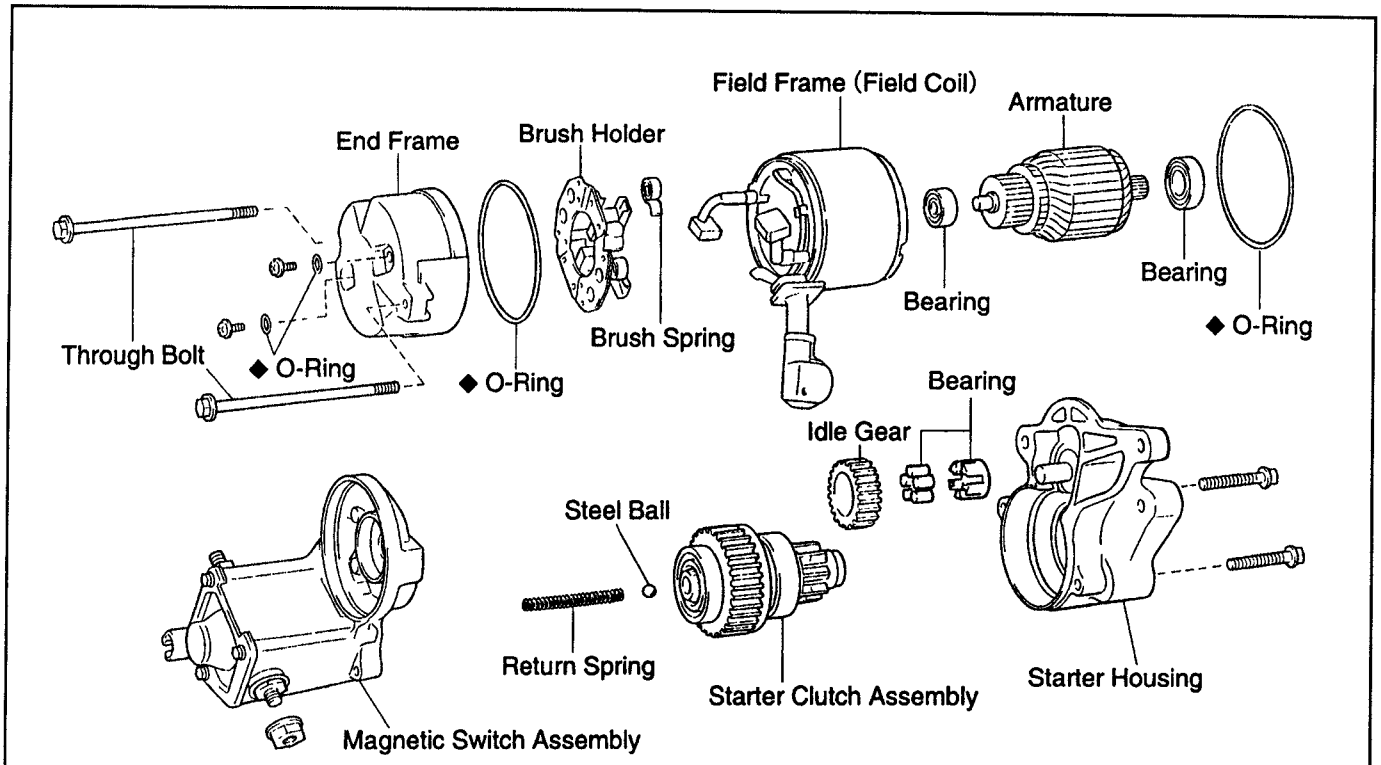

Magnetic Switch Assembly

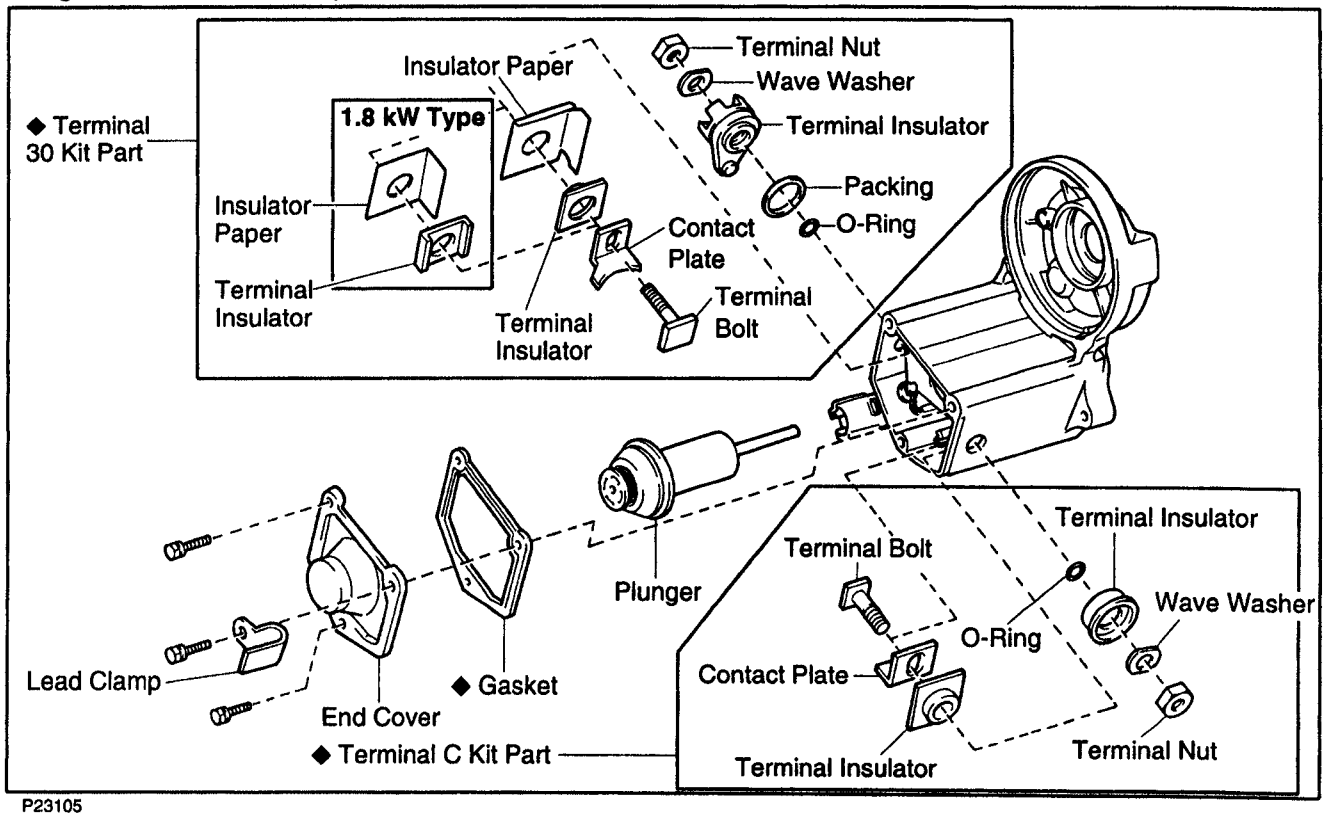

P23105
P24363

◆ Non-reusable parts

Z16517

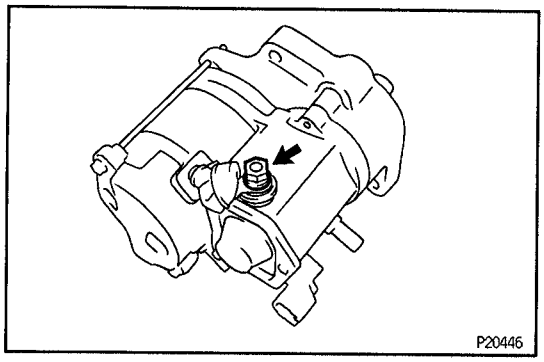

STARTER DISASSEMBLY

ST09C–08

1. REMOVE FIELD FRAME WITH ARMATURE FROM MAGNETIC SWITCH ASSEMBLY

(a) Remove the nut and disconnect the lead wire from the magnetic switch terminal.
Torque: 5.9 N·m (60 kgf·cm, 52 in.·lbf)

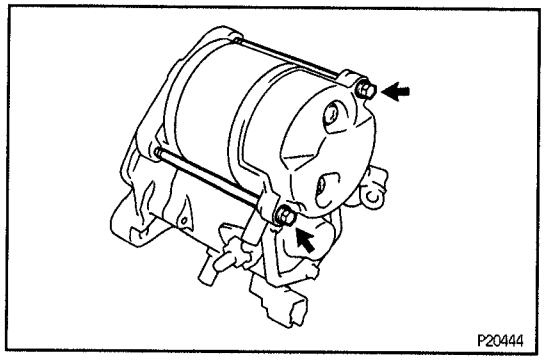

(b) Remove the 2 through bolts. Pull out the field frame with the armature from the magnetic switch assembly.
Torque:
1.4 kW type: 5.9 N·m (60 kgf·cm, 52 in.·lbf)
1.8 kW type: 9.3 N·m (95 kgf·cm, 82 in.·lbf)

(c) Remove the O–ring.
INSTALLATION HINT: Use a new O–ring.

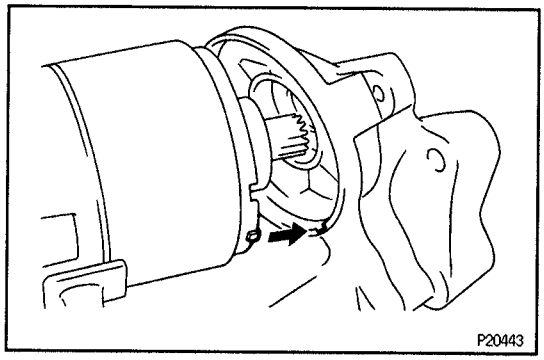

INSTALLATION HINT: Align the protrusion of the field frame with cutout of the magnetic switch.

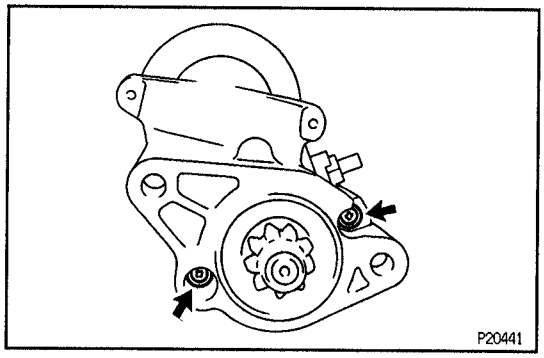

2. REMOVE STARTER HOUSING FROM MAGNETIC SWITCH ASSEMBLY

(a) Remove the 2 screws.
Torque:
1.4 kW type: 5.9 N·m (60 kgf·cm, 52 in.·lbf)
1.8 kW type: 9.3 N·m (95 kgf·cm, 82 in.·lbf)

(b) Remove the starter housing with the pinion gear, idler gear, bearing and clutch assembly.

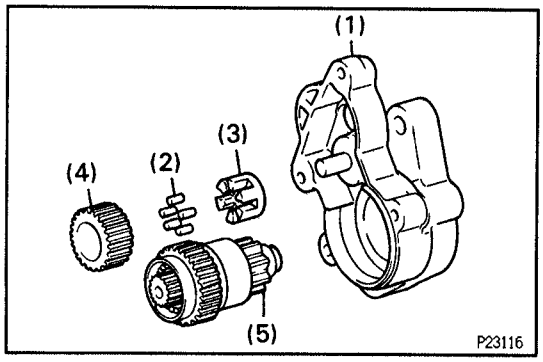

3. REMOVE CLUTCH ASSEMBLY AND GEARS FROM STARTER HOUSING

Remove these parts from the magnetic switch assembly:
(1) Starter housing
(2) Roller
(3) Retainer
(4) Idler Gear
(5) Clutch assembly

ST

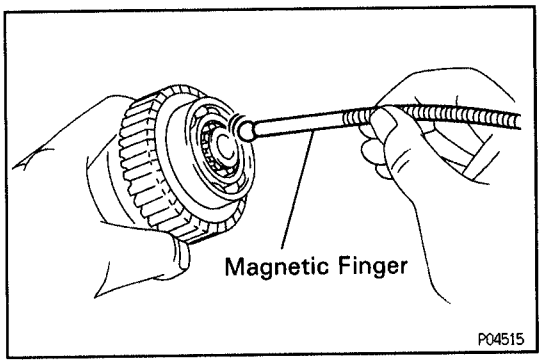

4. REMOVE STEEL BALL AND SPRING

Using a magnetic finger, remove the spring and steel ball from the clutch shaft hole.

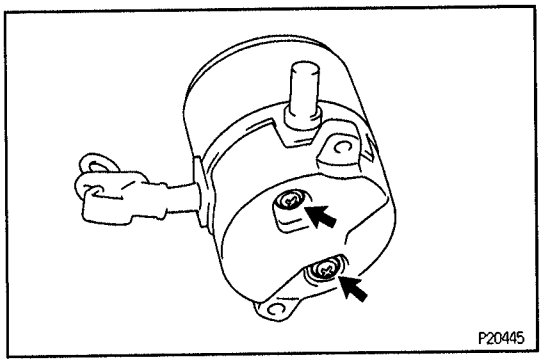

5. REMOVE BRUSHES AND BRUSH HOLDER

(a) Remove the 2 screws and pull the end cover with O–ring of the field frame.

Torque:

1.4 kW type: 1.5 N·m (15 kgf·cm, 13 in.·lbf)

1.8 kW type: 3.8 N·m (38 kgf·cm, 34 in.·lbf)

(b) Remove the O–ring from the field frame.

ASSEMBLY HINT: Use a new O–ring.

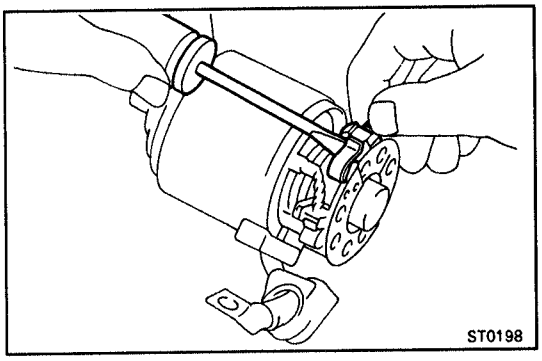

(c) Using a screwdriver, hold the spring back and disconnect the brush from the brush holder. Disconnect the 4 brushes and remove the brush holder.

6. REMOVE ARMATURE FROM FIELD FRAME

ST0D0–01

STARTER INSPECTION

Armature Coil

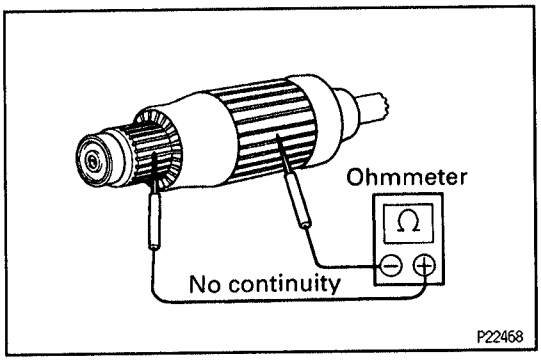

1. INSPECT THAT COMMUTATOR IS NOT GROUNDED

Using an ohmmeter, check that there is no continuity between the commutator and armature coil core.

If there is continuity, replace the armature.

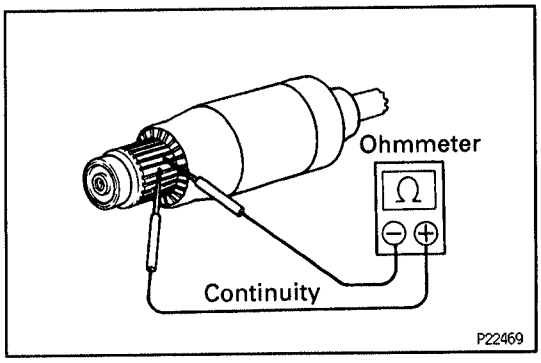

2. INSPECT COMMUTATOR FOR OPEN CIRCUIT

Using an ohmmeter, check that there is continuity between the segments of the commutator.

If there is no continuity between any segment, replace the armature.

Commutator

1. INSPECT COMMUTATOR FOR DIRTY AND BURNT SURFACES

If the surface is dirty or burnt, clean it with sandpaper (No.400) or on a lathe.

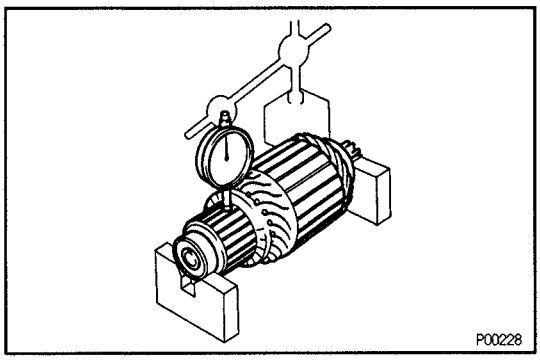

2. INSPECT COMMUTATOR CIRCLE RUNOUT

(a) Place the commutator on V–blocks.

(b) Using a dial indicator, measure the circle runout.

Maximum circle runout:

0.05 mm (0.0020 in.)

If the circle runout is greater than the maximum, correct it on a lathe.

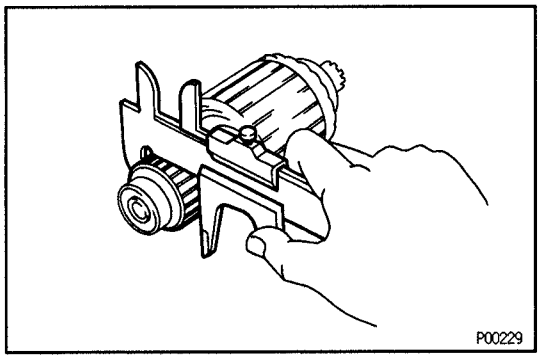

3. INSPECT COMMUTATOR DIAMETER

Using vernier calipers, measure the commutator diameter.

Standard diameter:

1.4 kW type: 30.0 mm (1.181 in.)

1.8 kW type: 35.0 mm (1.380 in.)

Minimum diameter:

1.4 kW type: 29.0 mm (1.142 in.)

1.8 kW type: 34.0 mm (1.340 in.)

If the diameter is less than the minimum, replace the armature.

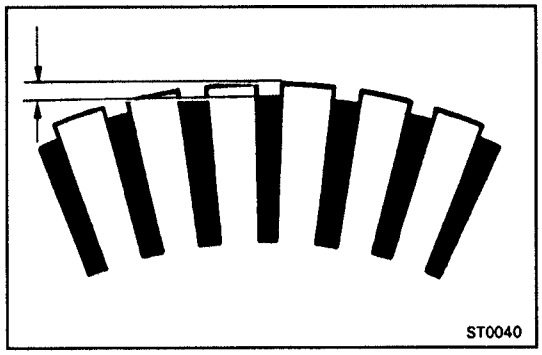

4. INSPECT UNDERCUT DEPTH OF SEGMENT

Check that the undercut depth is clean and free of foreign material. Smooth out the edge.

Standard undercut depth:

1.4 kW type: 0.6 mm (0.024 in.)

1.8 kW type: 0.7 mm (0.028 in.)

Minimum undercut depth:

0.2 mm (0.008 in.)

If the undercut depth is less than the minimum, correct it with a hacksaw blade.

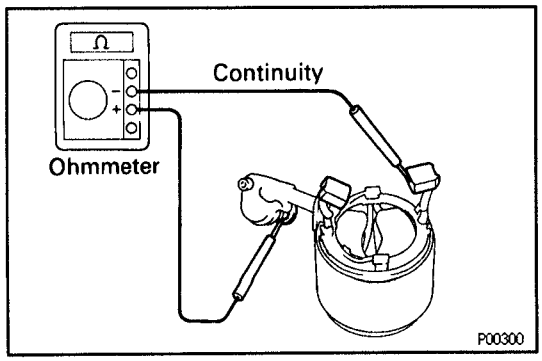

Field Frame (Field Coil)

1. INSPECT FIELD COIL FOR OPEN CIRCUIT

Using an ohmmeter, check that there is continuity between the lead wire and field coil brush lead.

If there is no continuity, replace the field frame.

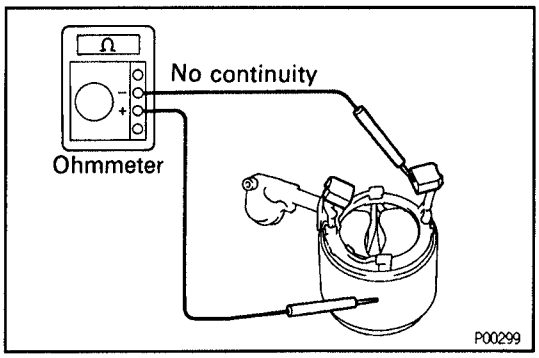

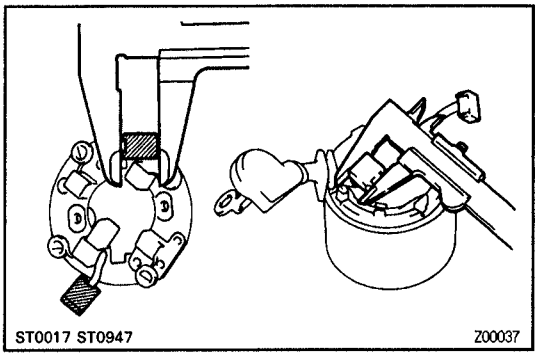

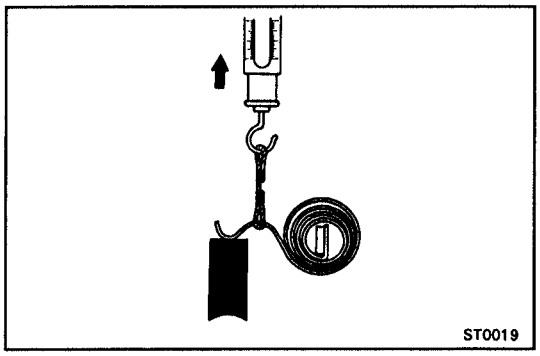

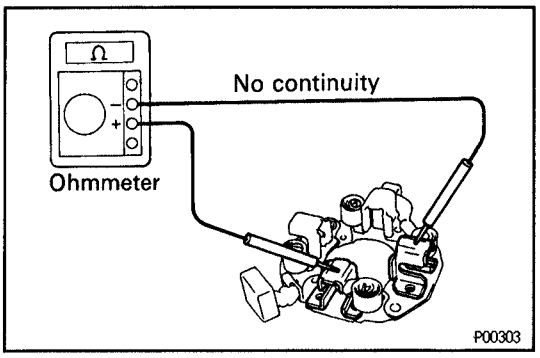

2. INSPECT THAT FIELD COIL IS NOT GROUNDED

Using an ohmmeter, check that there is no continuity between the field coil end and field frame.

If there is continuity, repair or replace the field frame.

Brushes

INSPECT BRUSH LENGTH

Using vernier calipers, measure the brush length.

Standard length:

1.4 kW type: 15.5 mm (0.610 in.)

1.8 kW type: 15.0 mm (0.591 in.)

Minimum length:

1.4 kW type: 10.0 mm (0.394 in.)

1.8 kW type: 9.0 mm (0.354 in.)

If the length is less than the minimum, replace the brush holder and field frame.

Brush Springs

INSPECT BRUSH SPRING LOAD

Take the pull scale reading the instant the brush spring separates from the brush.

Spring installed load:

1.4 kW type:

17.6 – 23.5 N (1.79 – 2.41 kgf, 3.9 – 5.3 lbf)

1.8 kW type:

21.5 – 27.5 N (2.19 – 2.81 kgf, 4.9 – 6.2 lbf)

Minimum spring installed load:

1.4 kW type: 11.8 N (1.2 kgf, 2.6 lbf)

1.8 kW type: 12.7 N (1.3 kgf, 2.7 lbf)

If the installed load is less than the minimum, replace the brush springs.

Brush Holder

INSPECT INSULATION OF BRUSH HOLDER

Using an ohmmeter, check that there is no continuity between the positive (+) and negative (–) brush holders.

If there is continuity, repair or replace the brush holder.

Clutch and Gears

1. INSPECT GEAR TEETH

Check the gear teeth on the pinion gear, idler gear and clutch assembly for wear or damage.

If damaged, replace the gear or clutch assembly.

If damaged, also check the flywheel ring gear for wear or damage.

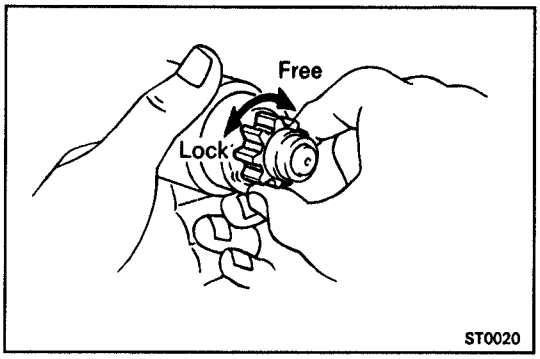

2. INSPECT CLUTCH

Rotate the clutch pinion gear clockwise and check that it turns freely. Try to rotate the clutch pinion counterclockwise and check that it locks.

If necessary, replace the clutch assembly.

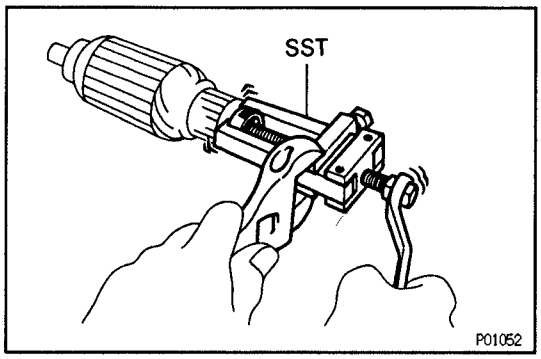

Bearings

1. INSPECT BEARINGS

Turn each bearing by hand while applying inward force.

If the resistance is felt or if the bearing sticks, replace the bearing.

2. IF NECESSARY, REPLACE BEARINGS

(a) Using SST, remove the bearing.
SST 09286–46011

(b) Using SST and a press, press in a new bearing.
SST 09201–41020

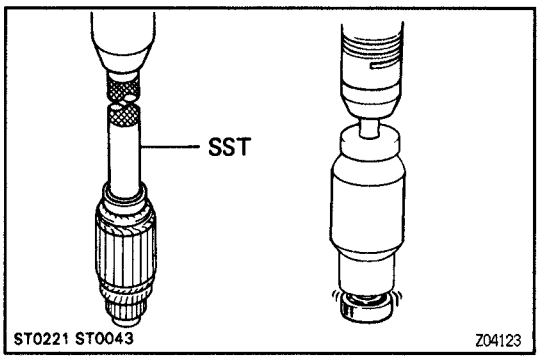

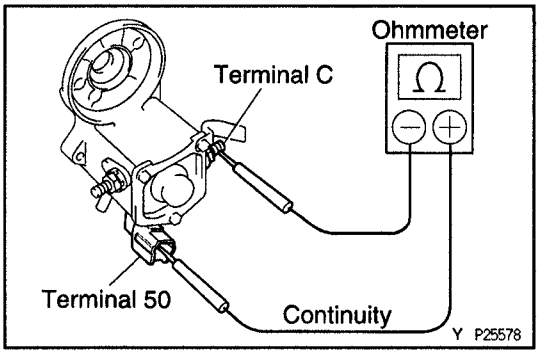

Magnetic Switch:

1. DO PULL–IN COIL OPEN CIRCUIT TEST

Using an ohmmeter, check that there is continuity between terminals 50 and C.

If there is no continuity, check and replace the magnetic switch assembly.

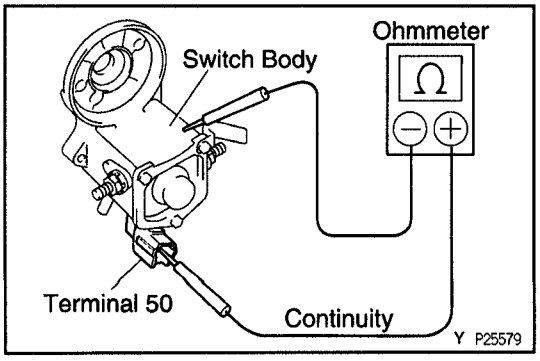

2. DO HOLD–IN COIL CIRCUIT TEST

Using an ohmmeter, check that there is continuity between terminal 50 and the switch body.

If there is no continuity, check and replace the magnetic switch assembly.

ST

ST001-01

MAGNETIC SWITCH TERMINAL KIT PARTS REPLACEMENT

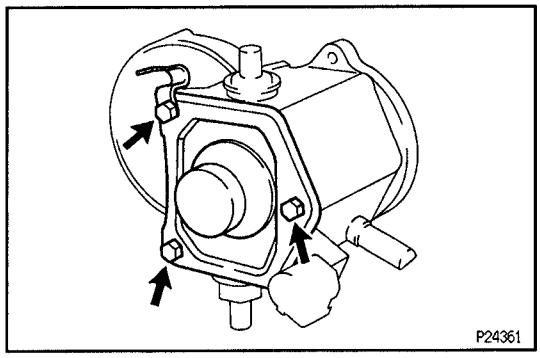

1. REMOVE MAGNETIC SWITCH END COVER

Remove the 3 bolts, end cover, gasket and plunger from the magnetic switch assembly.

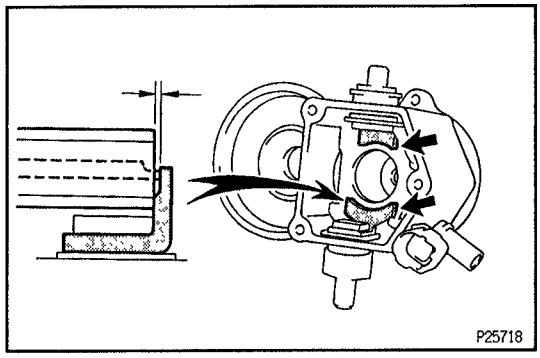

2. INSPECT CONTACT PLATE FOR WEAR

Using vernier calipers, measure the contact plate for depth of wear.

Maximum wear:

0.9 mm (0.035 in.)

If the depth of wear is greater than the maximum, replace the contact plate.

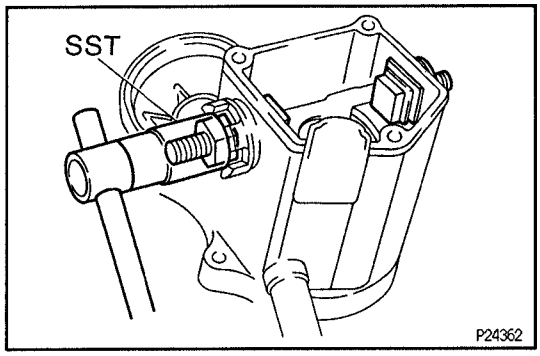

3. REMOVE TERMINAL KIT PARTS

(a) Using SST, remove the nut and washer.
SST 09810–38140

(b) Terminal C:
Remove the nut, terminal insulator outer, O–ring, terminal bolt, contact plate and terminal insulator inner.

(c) Terminal 30:
Remove the nut, terminal insulator outer, packing, O–ring, the contact plate, terminal bolt, terminal insulator inner, insulation paper.

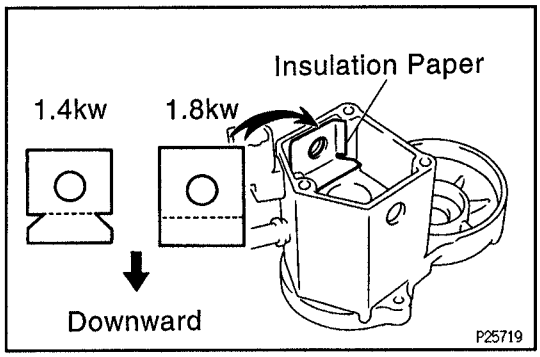

4. REINSTALL TERMINAL KIT PARTS

Terminal 30:

(a) Insert the insulation paper between the coil and housing.
HINT: Install the insulation paper facing the correct direction as shown in the illustration.

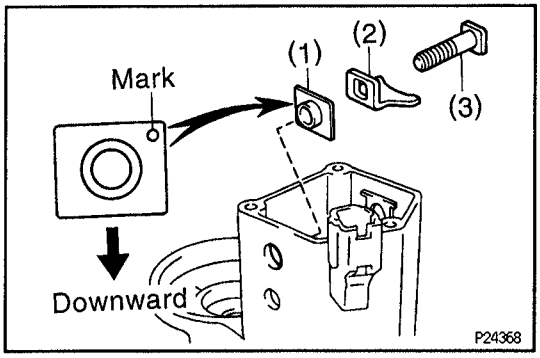

(b) Install these parts to the magnetic switch assembly:
(1) Terminal insulator inner
(2) Contact plate
(3) Terminal bolt
HINT: Install the terminal insulator inner in the direction as shown in the illustration.

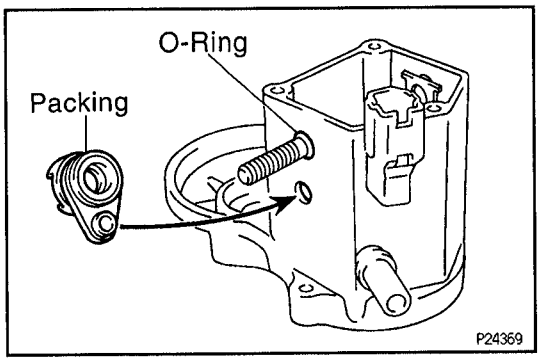

(c) Install the O–ring on the terminal bolt.
(d) Place the packing to the terminal insulator outer, and install it to the terminal.
HINT: Match the protrusion of the insulator with the indentation of the housing.
(e) Install the washer and nut, temporarily tighten the nut.

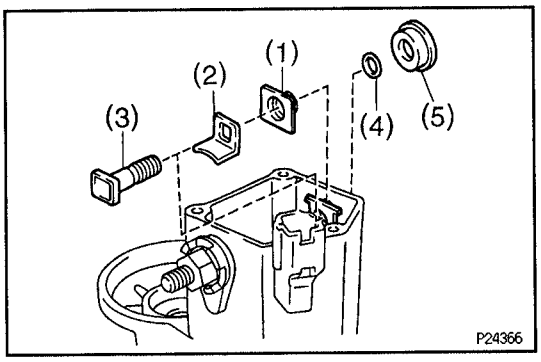

Terminal C:

(a) Install these parts to the magnetic switch assembly:
(1) Terminal insulator inner
(2) Contact plate
(3) Terminal bolt
(4) O–ring
(5) Terminal insulator outer
HINT: Install the terminal insulator inner in the same direction as terminal 30.
(b) Install the washer and nut, temporarily tighten the nut.

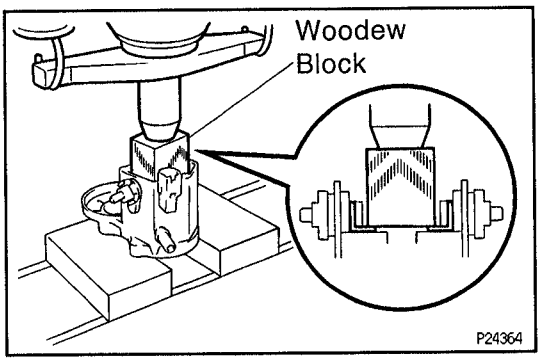

5. TIGHTEN TERMINAL NUT

(a) Put a wood block on the contact plate and press it down with a hand press.

Dimensions of wood block:

20 x 37 x 40 mm (0.79 x 1.46 x 1.57 in.)

Press force:

981 N (100 kgf, 221 lbf)

NOTICE:

- **Check the diameter of the hand press ram. Then calculate the gauge pressure of the press when 981 N (100 kgf, 221 lbf) of force is applied.**

$$(\text{kgf/cm}^2) = \frac{100\ \text{kgf}}{\left(\frac{\text{Ram diameter (cm)}}{2}\right)^2 \times 3.14\ (\pi)}$$

$$(\text{psi}) = \frac{221\ \text{lbf}}{\left(\frac{\text{Ram diameter (in.)}}{2}\right)^2 \times 3.14\ (\pi)}$$

(kPa) = (kgf/cm²) x 98.1

(kPa) = (psi) x 6.9

V06796

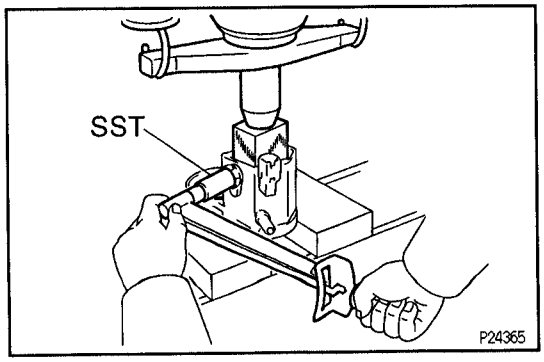

- **If the contact plate is not pressed down with the specified pressure, the contact plate may tilt due to coil deformation or the tightening of the nut.**

(b) Using SST, tighten the nut to the specified torque.
SST 09810–38170
Torque: 17 N·m (170 kgf·cm, 12 ft·lbf)
NOTICE: If the nut is over tightened, it may cause cracks on the inside of the insulator.

ST

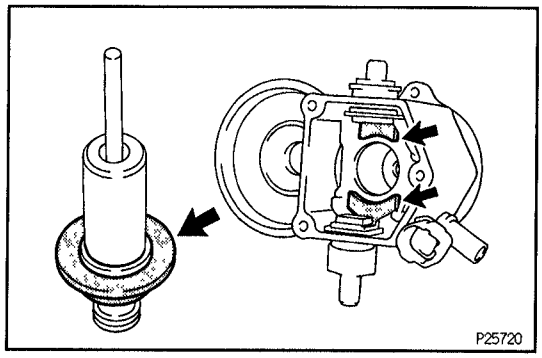

6. **CLEAN CONTACT SURFACES OF CONTACT PLATE AND PLUNGER**
Clean the contact surfaces of the remaining contact plate and plunger with a dry shop rag.

7. **REINSTALL MAGNETIC SWITCH END COVER**
Install the plunger, gasket and magnetic switch end cover with the 3 bolts.
Torque:
1.4 kW type: 2.5 N·m (26 kgf·cm, 22 in.·lbf)
1.8 kW type: 3.6 N·m (37 kgf·cm, 32 in.·lbf)

STARTER ASSEMBLY

ST0AD–01

Assembly is in the reverse order of disassembly.

ST

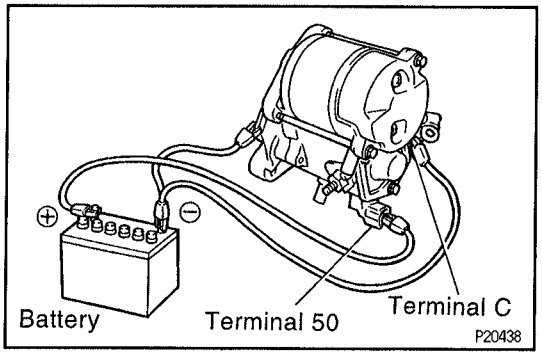

STARTER PERFORMANCE TEST

ST03X–0C

NOTICE: These tests must be done within 3 to 5 seconds to avoid burning out the coil.

1. **DO PULL–IN TEST**
(a) Disconnect the field coil lead wire from terminal C.
(b) Connect the battery to the magnetic switch as shown. Check that the clutch pinion gear moves outward.

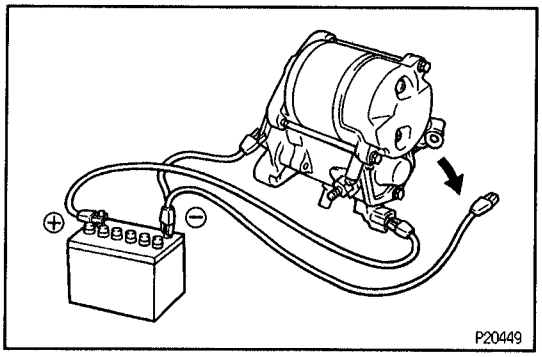

2. **DO HOLD–IN TEST**
With battery connected as above with the clutch pinion gear out, disconnect the negative (–) lead from terminal C. Check that the pinion gear remains out.

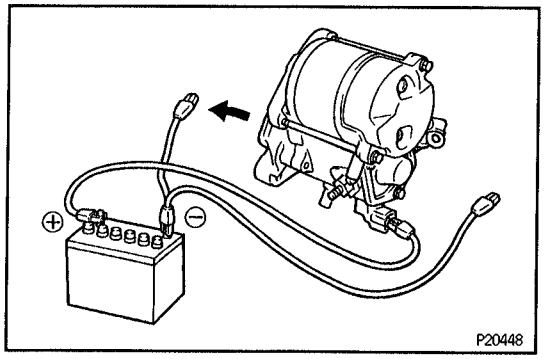

3. **INSPECT CLUTCH PINION GEAR RETURN**
Disconnect the negative (–) lead from the switch body.
Check that the clutch pinion gear returns inward.

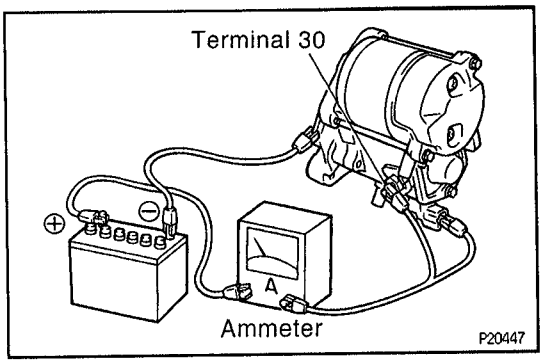

4. DO NO–LOAD PERFORMANCE TEST

(a) Connect the battery and ammeter to the starter as shown.

(b) Check that the starter rotates smoothly and steadily with the pinion gear moving out. Check that the ammeter reads the specified current.

Specified current:

1.4 kW type

At 11.5 V: 90 A or less

1.8 kW type

At 11.5 V: 100 A or less

ST

ST0AE–01

STARTER INSTALLATION

Installation is in the reverse order of removal.

STARTER RELAY

ST09E–04

STARTER RELAY INSPECTION

LOCATION: The relay is located in the Relay Block No.2 in the engine compartment.

1. REMOVE STARTER RELAY

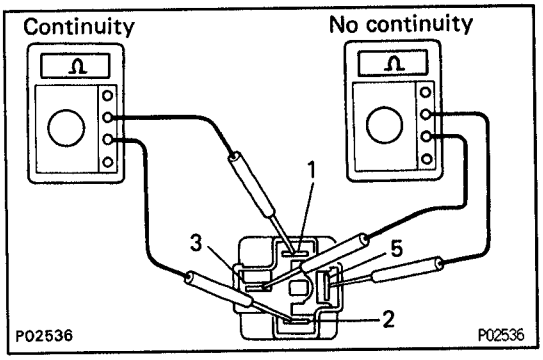

2. INSPECT STARTER RELAY

A. Inspect relay continuity

(a) Using an ohmmeter, check that there is continuity between terminals 1 and 2.

If there no continuity, replace the relay.

(b) Check that there is no continuity between terminals 3 and 5.

If there continuity, replace the relay.

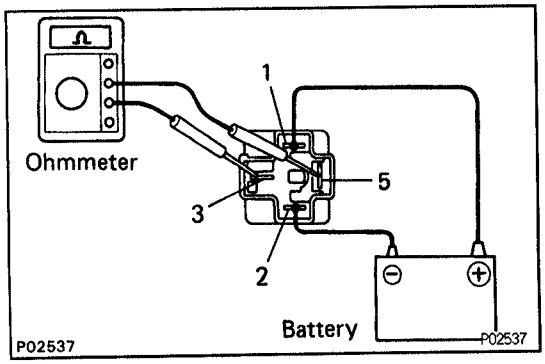

B. Inspect relay operation

(a) Apply battery voltage across terminals 1 and 2.

(b) Check that there is continuity between terminals 3 and 5.

If operation is not as described, replace the relay.

3. REINSTALL STARTER RELAY

SERVICE SPECIFICATIONS

SERVICE DATA

ST09F–06

Starter (1.4 kW type)	Rated voltage and output power		12 V 1.4 kW
	No–load characteristics	Current	90 A or less at 11.5 V
		rpm	3,000 rpm or more
	Brush length	STD	15.5 mm (0.610 in.)
		Minimum	10.0 mm (0.394 in.)
	Spring installed load	STD	17.6 – 23.5 N (1.79 – 2.41 kgf, 3.9 – 5.3 lbf)
		Minimum	11.8 N (1.2 kgf, 2.6 lbf)
	Commutator		
	Diameter	STD	30.0 mm (1.181 in.)
		Minimum	29.0 mm (1.142 in.)
	Undercut depth	STD	0.6 mm (0.024 in.)
		Minimum	0.2 mm (0.008 in.)
	Circle runout	Maximum	0.05 mm (0.0020 in.)
	Magnetic switch		
	Contact plate for wear	Maximum	0.9 mm (0.035 in.)
Starter (1.8 kW type)	Rated voltage and output power		12 V 1.8 kW
	No–load characteristics	Current	100 A or less at 11.5 V
		rpm	2,500 rpm or more
	Brush length	STD	15.0 mm (0.591 in.)
		Minimum	9.0 mm (0.354 in.)
	Spring installed load	STD	21.5 – 27.5 N (2.19 – 2.81 kgf, 4.9 – 6.2 lbf)
		Minimum	12.7 N (1.3 kgf, 2.7 lbf)
	Commutator		
	Diameter	STD	35.0 mm (1.380 in.)
		Minimum	34.0 mm (1.340 in.)
	Undercut depth	STD	0.7 mm (0.028 in.)
		Minimum	0.2 mm (0.008 in.)
	Circle runout	Maximum	0.05 mm (0.0020 in.)
	Magnetic switch		
	Contact plate for wear	Maximum	0.9 mm (0.035 in.)

TORQUE SPECIFICATIONS

ST043–09

Part tightened		N·m	kgf·cm	ft·lbf
Starter wire x Starer		8.8	90	78 in.·lbf
Starter x Transaxle		39	400	29
Lead wire x Terminal C of starter		5.9	60	52 in.·lbf
End cover, Magnetic switch x Starter housing	1.4 kW type	5.9	60	52 in.·lbf
	1.8 kW type	9.3	95	82 in.·lbf
End cover x Field frame	1.4 kW type	1.5	15	13 in.·lbf
	1.8 kW type	3.8	38	34 in.·lbf
Terminal nut x Terminal C of starter, Terminal 30 of starter		17	170	12
Magnetic switch end cover x Magnetic switch	1.4 kW type	2.5	26	23 in.·lbf
	1.8 kW type	3.6	37	32 in.·lbf

CHARGING SYSTEM

(2RZ–FE, 3RZ–FE)
PRECAUTION ..... CH– 2
PREPARATION ..... CH– 2
ON–VEHICLE INSPECTION ..... CH– 3
GENERATOR ..... CH– 6
SERVICE SPECIFICATIONS ..... CH– 15
(5VZ–FE)
PRECAUTION ..... CH– 16
PREPARATION ..... CH– 16
ON–VEHICLE INSPECTION ..... CH– 17
GENERATOR ..... CH– 20
SERVICE SPECIFICATIONS ..... CH– 28

(2RZ–FE, 3RZ–FE)

PRECAUTION

CH00J–08

1. Check that the battery cables are connected to the correct terminals.
2. Disconnect the battery cables when the battery is given a quick charge.
3. Do not perform tests with a high voltage insulation resistance tester.
4. Never disconnect the battery while the engine is running.

PREPARATION

CH00Q–0N

SST (SPECIAL SERVICE TOOLS)

	09285–76010	Injection Pump Camshaft Bearing Cone Replacer	Rotor rear bearing cover
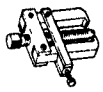	09286–46011	Injection Pump Spline Shaft Puller	Rectifier end frame
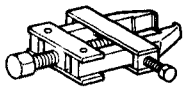	09820–00021	Alternator Rear Bearing Puller	
	09820–00030	Alternator Rear Bearing Replacer	Rotor rear bearing
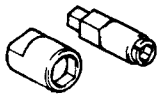	09820–63010	Alternator Pulley Set Nut Wrench Set	
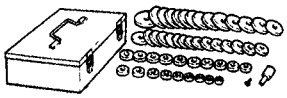	09950–60010	Replacer Set	Rotor front bearing
	(09951–00260)	Replacer 26	
	(09951–00500)	Replacer 50	
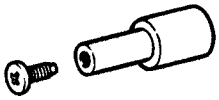	(09952–06010)	Adapter	

RECOMMENDED TOOLS

CH00S–0M

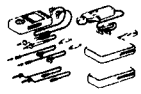	09082–00050 TOYOTA Electrical Tester Set.	

EQUIPMENT

CH00U–0P

Ammeter(A)	
Battery specific gravity gauge	
Belt tension gauge	
Torque wrench	
Vernier calipers	Rotor (Slip ring), Brush

CH

ON–VEHICLE INSPECT ION

CH0AH–01

1. Except Delco Battery:
CHECK BATTERY ELECTROLYTE LEVEL AND VOLTAGE

(a) Check the electrolyte quantity of each cell.
If under the lower level, replace the battery (or add distilled water if possible) and check the charging system.

(b) Measure the battery voltage between the terminals negative (–) and positive (+) of the battery.
Standard voltage:
At 20°C (68°F): 12.7 – 12.9 V
HINT:
- Before measuring the voltage, turn the ignition switch OFF and turn off the electrical systems (headlight, blower motor, rear defogger etc.).
- If the vehicle has been running, wait 5 minutes or more after the vehicle stops before measuring the battery voltage.

If the voltage is less than the specification, charge the battery.

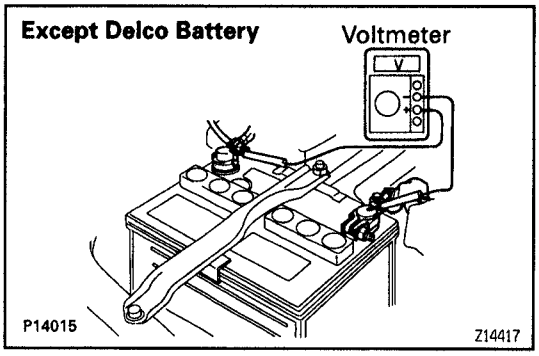

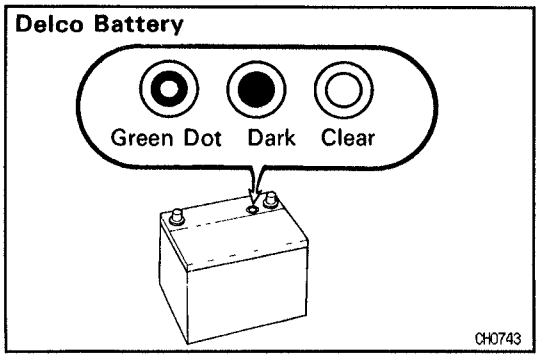

2. Delco Battery:
CHECK HYDROMETER
Green Dot visible: The battery is adequately charged.
Dark (Green Dot not visible): The battery must be charged.
Clear or Light Yellow: Replace the battery.

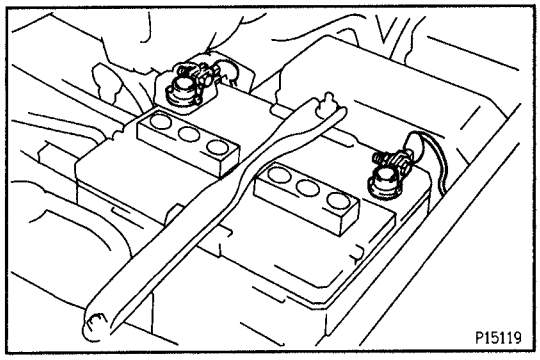

HINT: There is no need to add water during the entire service life of the battery.

3. CHECK BATTERY TERMINALS, FUSIBLE LINK AND FUSES

(a) Check that the battery terminals are not loose or corroded.

(b) Check the fusible link, H–fuses and fuses for continuity.

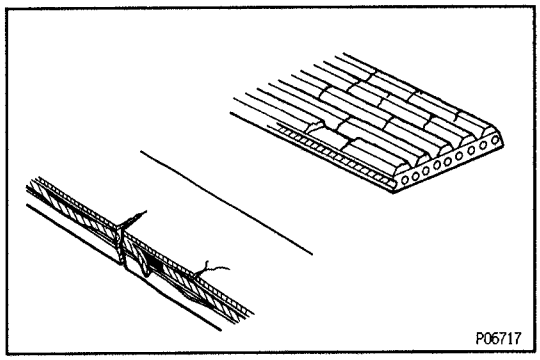

4. INSPECT DRIVE BELT

(a) Visually check the belt for excessive wear, frayed cords etc.

If any defect has been found, replace the drive belt.

HINT: Cracks on the rib side of a belt are considered acceptable. If the belt has chunks missing from the ribs, it should be replaced.

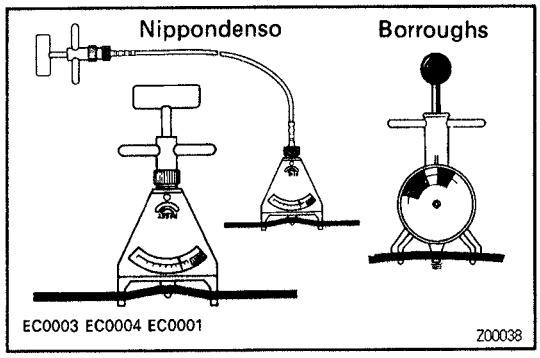

(b) Using a belt tension gauge, measure the belt tension.

Belt tension gauge:

Nippondenso BTG–20 (95506–00020)

Borroughs No. BT–33–73F

Drive belt tension:

New belt 165 ± 10 lbf

Used belt 115 ± 20 lbf

If the belt tension is not as specified, adjust it.

HINT:

- "New belt" refers to a belt which has been used less than 5 minutes on a running engine.
- "Used belt" refers to a belt which has been used on a running engine for 5 minutes or more.
- After installing a belt, check that it fits properly in the ribbed grooves.
- Check with your hand to confirm that the belt has not slipped out of the groove on the bottom of the pulley.
- After installing a new belt, run the engine for about 5 minutes and recheck the belt tension.

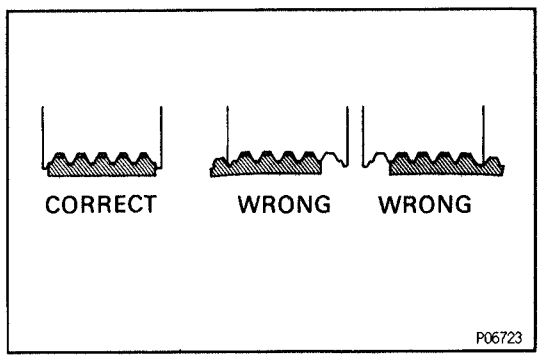

5. VISUALLY CHECK GENERATOR WIRING AND LISTEN FOR ABNORMAL NOISES

(a) Check that the wiring is in good condition.

(b) Check that there is no abnormal noise from the generator while the engine is running.

6. INSPECT DISCHARGE WARNING LIGHT CIRCUIT

(a) Turn the ignition switch "ON". Check that the discharge warning light comes on.

(b) Start the engine. Check that the light goes off.

If the light does not operate as specified, troubleshoot the discharge warning light circuit.

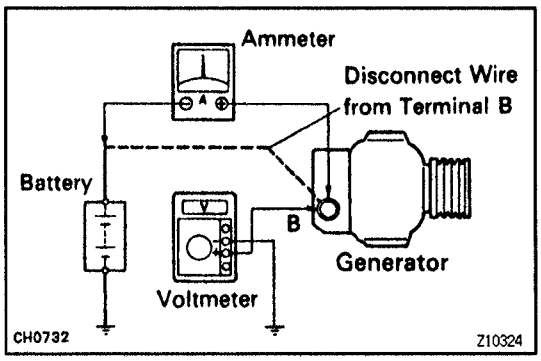

7. INSPECT CHARGING CIRCUIT WITHOUT LOAD

HINT: If a battery/generator tester is available, connect the tester to the charging circuit as per the manufacturer's instructions.

(a) If a tester is not available, connect a voltmeter and ammeter to the charging circuit as follows:

- Disconnect the wire from terminal B of the generator and connect it to the negative (–) lead of the ammeter.
- Connect the positive (+) lead of the ammeter to terminal B of the generator.
- Connect the positive (+) lead of the voltmeter to terminal B of the generator.
- Ground the negative (–) lead of the voltmeter.

(b) Check the charging circuit as follows:

With the engine running from idle to 2,000 rpm, check the reading on the ammeter and voltmeter.

Standard amperage:

10 A or less

Standard voltage:

At 25°C (77°F): 14.0 – 15.0 V

At 115°C (239°F): 13.5 – 14.3 V

If the voltmeter reading is more than the standard voltage, replace the voltage regulator.

If the voltmeter reading is less than the standard voltage, check the voltage regulator and generator as follows:

- With terminal F grounded, start the engine and check the voltmeter reading of terminal B.
- If the voltmeter reading is more than the standard voltage, replace the voltage regulator.
- If the voltmeter reading is less than the standard voltage, check the generator.

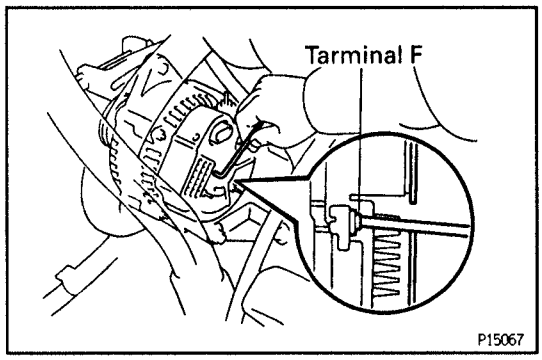

8. INSPECT CHARGING CIRCUIT WITH LOAD

(a) With the engine running at 2,000 rpm, turn on the high beam headlights and place the heater blower switch at "HI".

(b) Check the reading on the ammeter.

Standard amperage:

30 A or more

If the ammeter reading is less than the standard amperage, repair the generator.

HINT: If the battery is fully charged, the indication will sometimes be less than the standard amperage.

GENERATOR

CH03G–08

COMPONENTS FOR REMOVAL AND INSTALLATION

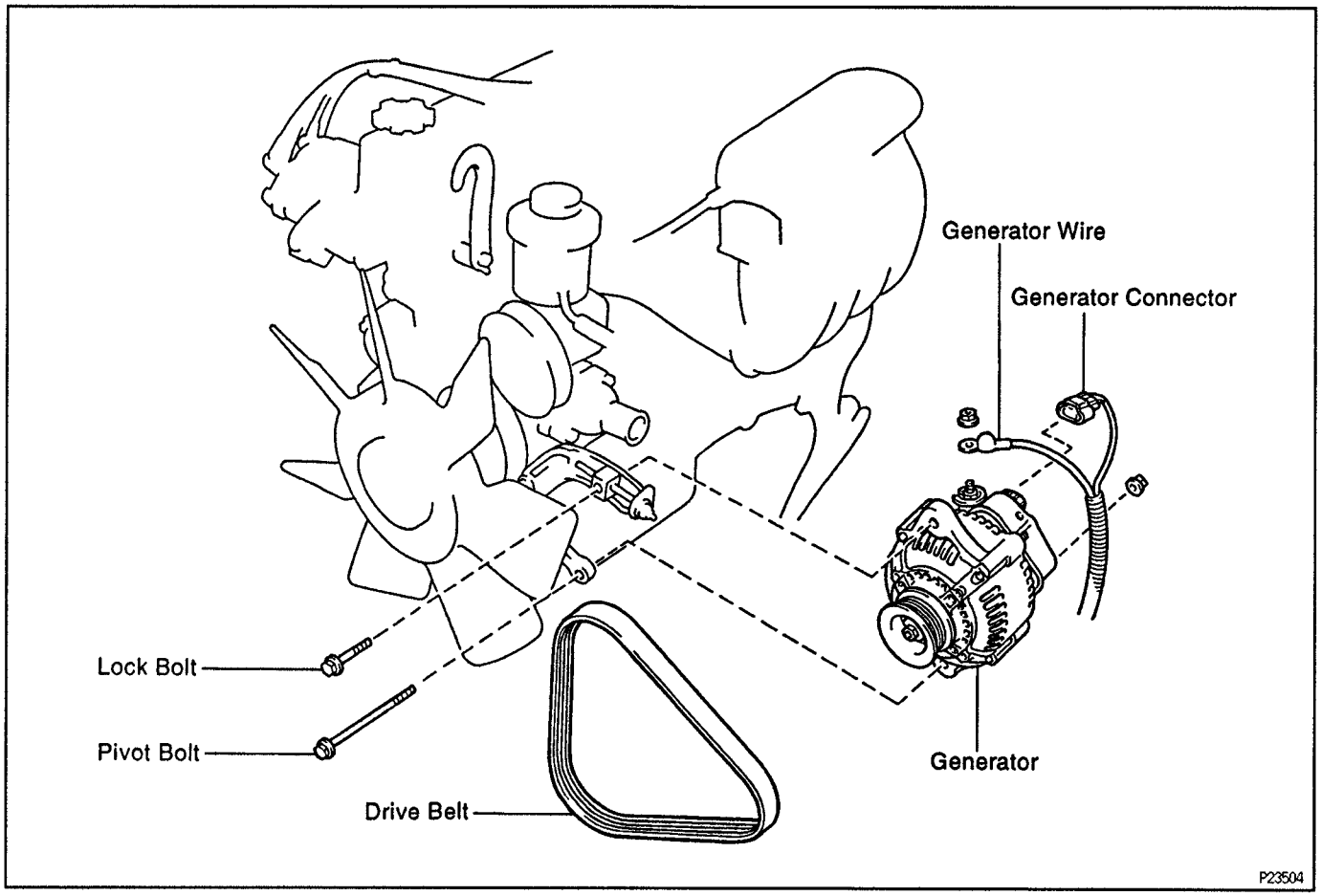

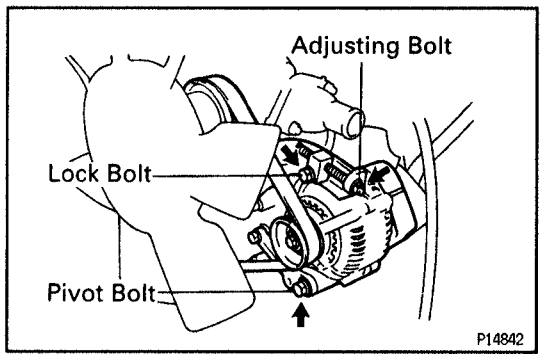

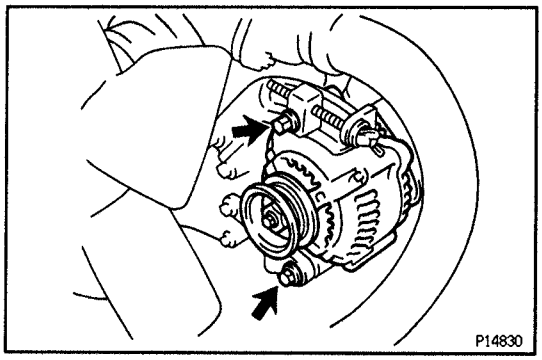

CH06J–02

GENERATOR REMOVAL

1. REMOVE DRIVE BELT

(a) Loosen the lock bolt, pivot bolt, nut and adjusting bolt.

(b) Remove the drive belt.

2. REMOVE GENERATOR

(a) Disconnect the generator connector.

(b) Remove the nut, and disconnect the generator wire.
Torque: 9.8 N·m (100 kgf·cm, 7.2 ft·lbf)

(c) Disconnect the wire harness with the clip.

(d) Remove the lock bolt, pivot bolt, nut and generator.
Torque:
Pivot bolt: 59 N·m (600kgf·cm, 43 ft·lbf)
Lock bolt: 29 N·m (300kgf·cm, 21 ft·lbf)

CH011–0W

COMPONENTS FOR DISASSEMBLY AND ASSEMBLY

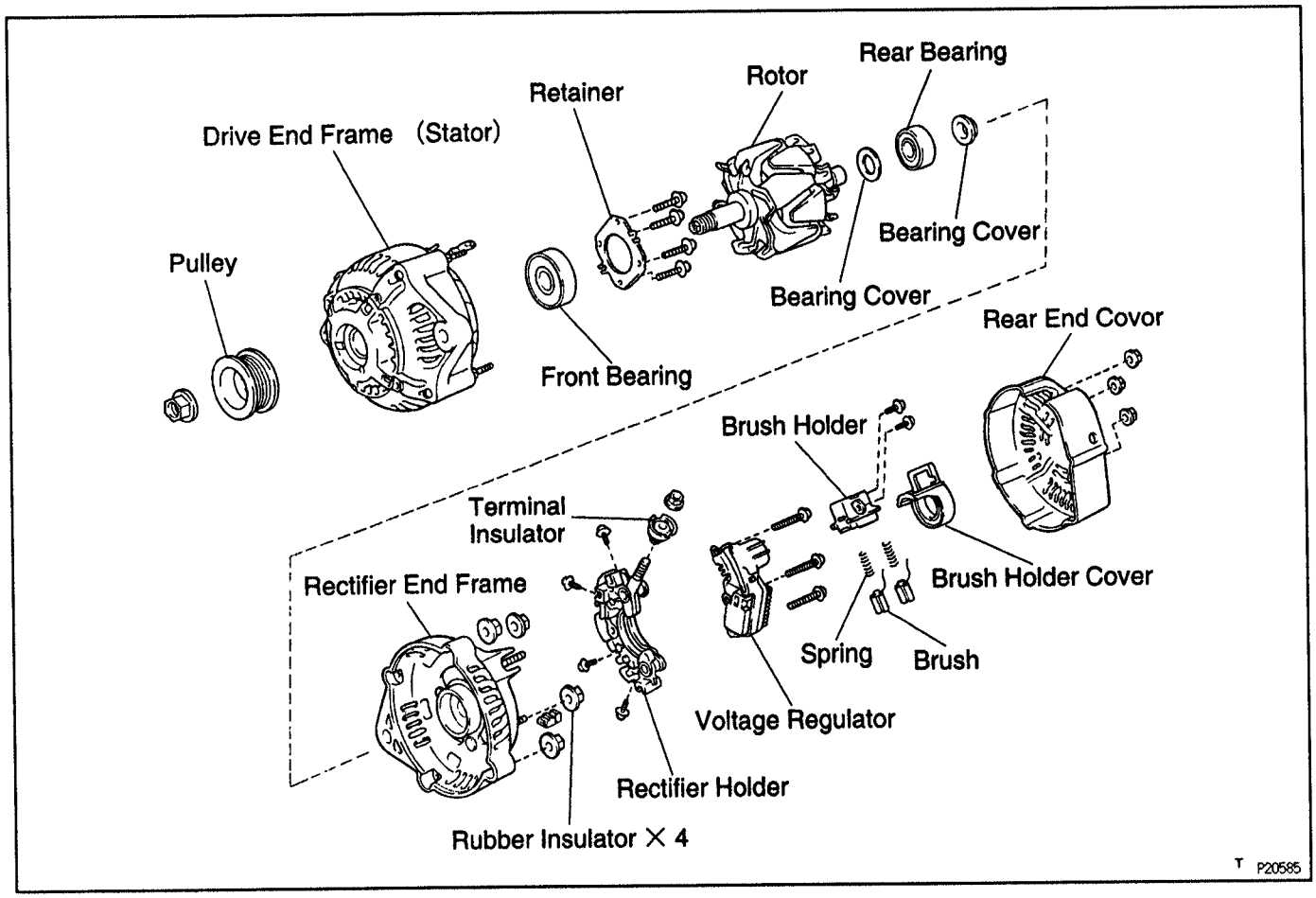

CH0AJ–01

GENERATOR DISASSEMBLY

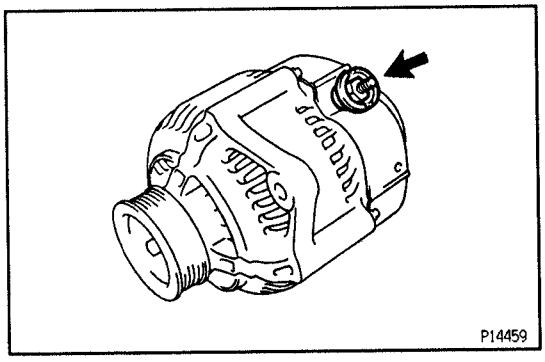

1. REMOVE REAR END COVER

(a) Remove the nut and terminal insulator.

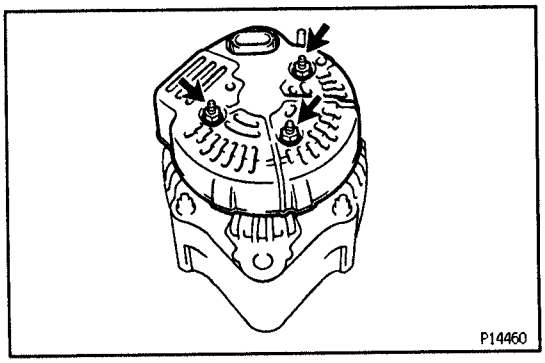

(b) Remove the 3 nuts, and end cover.

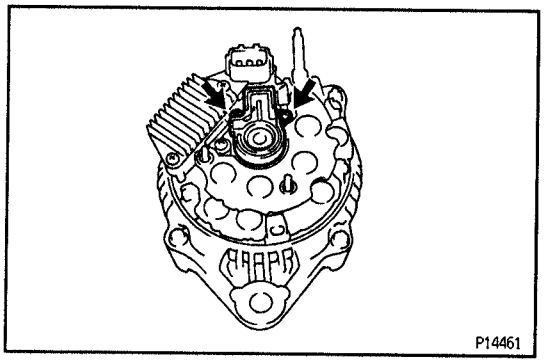

2. REMOVE BRUSH HOLDER

(a) Remove the 2 screws and brush holder.

(b) Remove the brush holder cover from the brush holder.

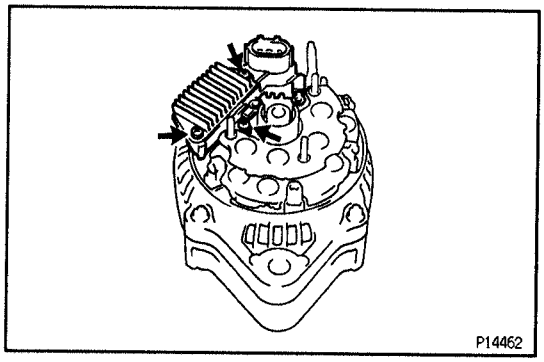

3. REMOVE VOLTAGE REGULATOR

Remove the 3 screws and voltage regulator.

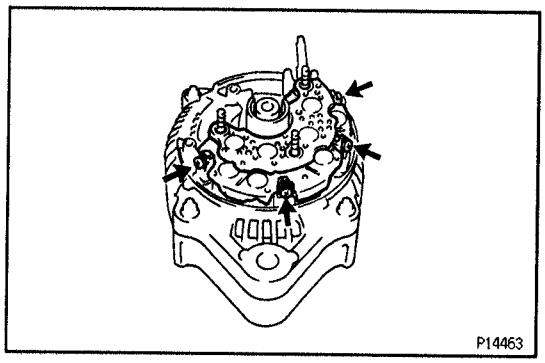

4. REMOVE RECTIFIER HOLDER

(a) Remove the 4 screws and rectifier holder.

(b) Remove the 4 rubber insulators.

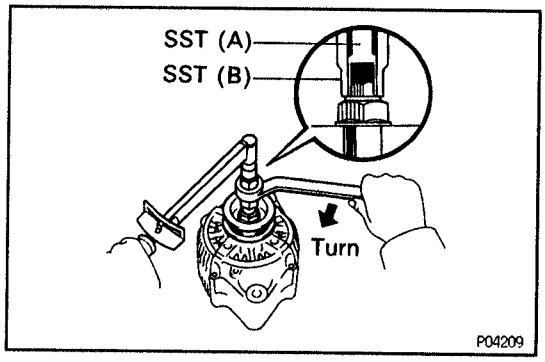

5. REMOVE PULLEY

(a) Hold SST (A) with a torque wrench, and tighten SST (B) clockwise to the specified torque.

SST 09820–63010

Torque: 39 N·m (400 kgf·cm, 29 ft·lbf)

(b) Check that SST (A) is secured to the rotor shaft.

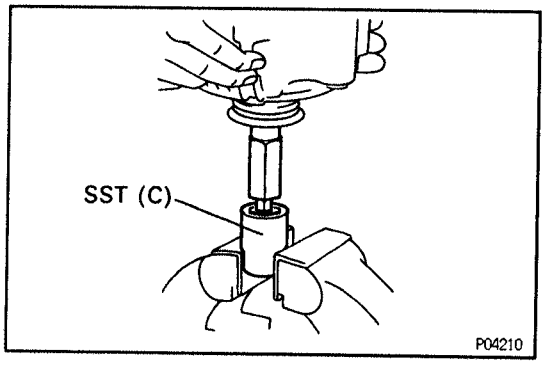

(c) Mount SST (C) in a vise.

(d) Install the generator to SST (C).

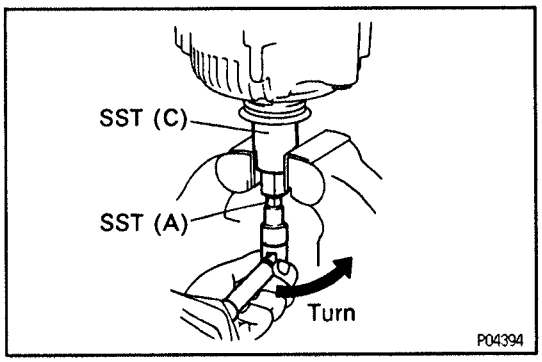

(e) To loosen the pulley nut, turn SST (A) in the direction shown in the illustration.
NOTICE: To prevent damage to the rotor shaft, do not loosen the pulley nut more than one–half of a turn.

(f) Remove the generator from SST (C).

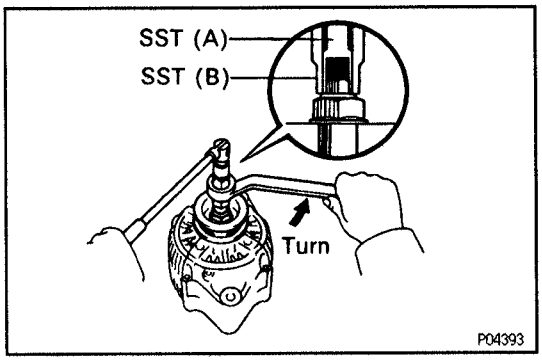

(g) Turn SST (B) and remove SST (A and B).

(h) Remove the pulley nut and pulley.

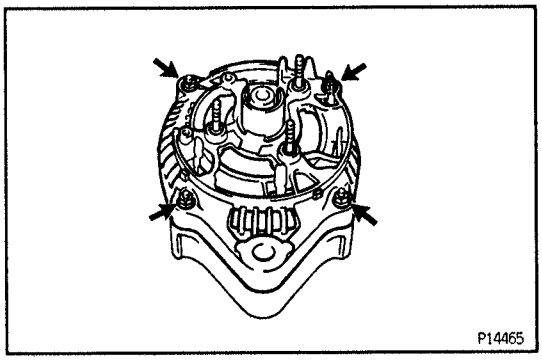

6. REMOVE RECTIFIER END FRAME

(a) Remove the 4 nuts.

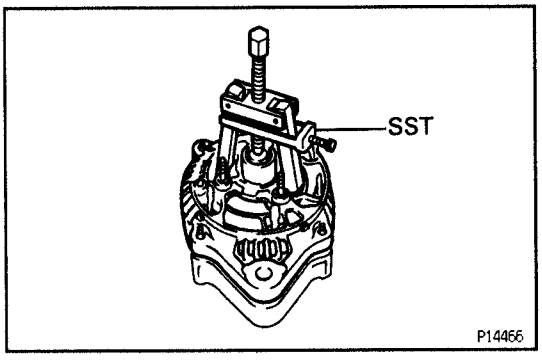

(b) Using SST, remove the rectifier end frame.
SST 09286–46011

7. REMOVE ROTOR FROM DRIVE END FRAME

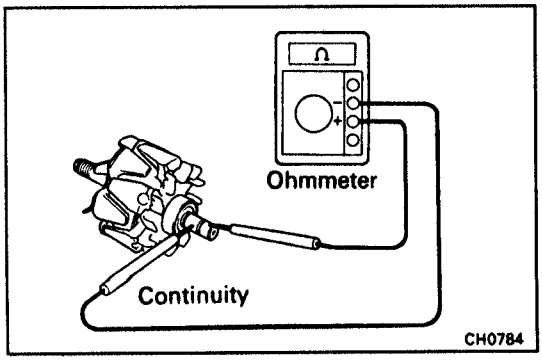

GENERATOR INSPECTION AND REPAIR CH0AK–01

Rotor

1. INSPECT ROTOR FOR OPEN CIRCUIT

Using an ohmmeter, check that there is continuity between the slip rings.

Standard resistance (Cold):

2.8 – 3.0 Ω

If there is no continuity, replace the rotor.

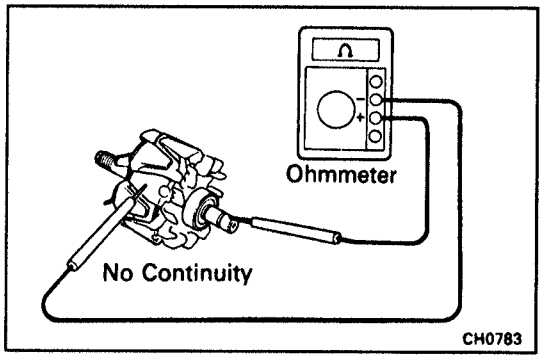

2. INSPECT ROTOR FOR GROUND

Using an ohmmeter, check that there is no continuity between the slip ring and rotor.

If there is continuity, replace the rotor.

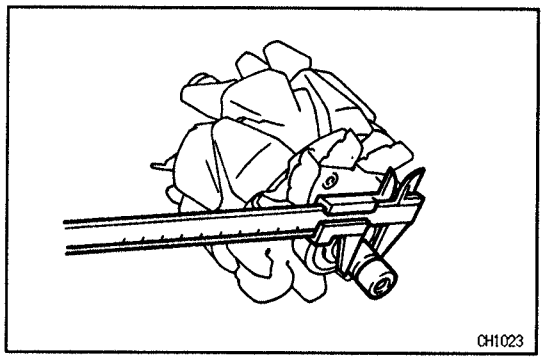

3. INSPECT SLIP RINGS

(a) Check that the slip rings are not rough or scored.

If rough or scored, replace the rotor.

(b) Using a vernier caliper, measure the slip ring diameter.

Standard diameter:

14.2 – 14.4 mm (0.559 – 0.567 in.)

Minimum diameter:

12.8 mm (0.504 in.)

If the diameter is less than the minimum, replace the rotor.

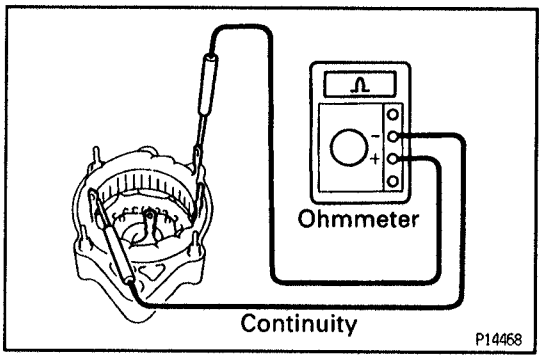

Stator (Drive End Frame)

1. INSPECT STATOR FOR OPEN CIRCUIT

Using an ohmmeter, check that there is continuity between the coil leads.

If there is no continuity, replace the drive end frame assembly.

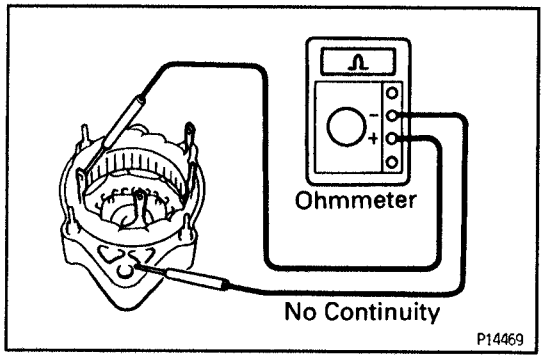

2. INSPECT STATOR FOR GROUND

Using an ohmmeter, check that there is no continuity between the coil lead and drive end frame.

If there is continuity, replace the drive end frame assembly.

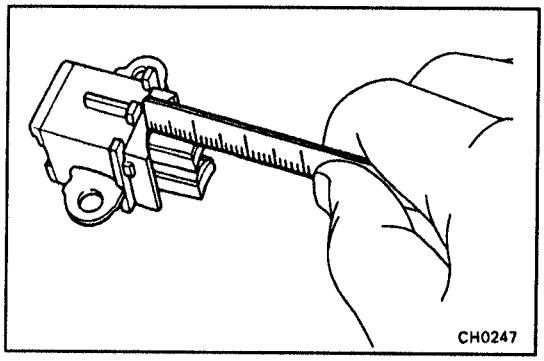

Brushes

1. INSPECT EXPOSED BRUSH LENGTH

Using a scale, measure the exposed brush length.

Standard exposed length:

10.5 mm (0.413 in.)

Minimum exposed length:

1.5 mm (0.059 in.)

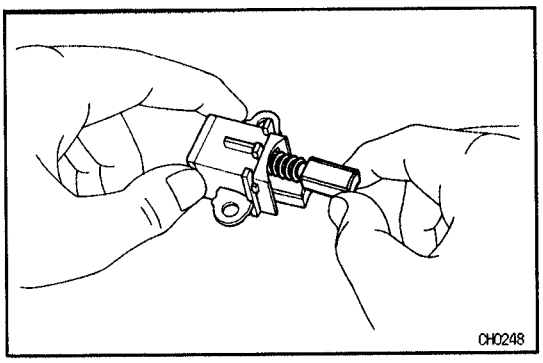

If the exposed length is less than the minimum, replace the brushes.

2. IF NECESSARY, REPLACE BRUSHES

(a) Unsolder and remove the brush and spring.

(b) Run the wire of a new brush through the spring and the hole in the brush holder, and insert the spring and brush into the brush holder.

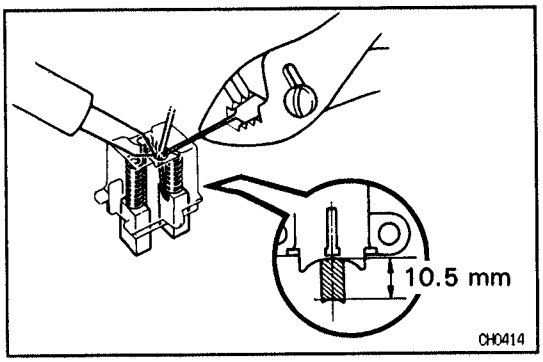

(c) Solder the brush wire to the brush holder at specified exposed length.

Exposed length:

10.5 mm (0.413 in.)

(d) Check that the brush moves smoothly in the brush holder.

(e) Cut off the excess wire.

(f) Apply insulation paint to the soldered area.

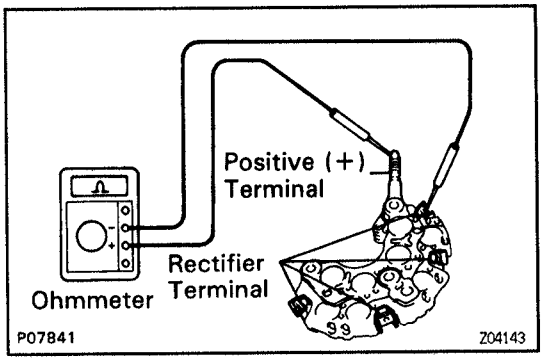

Rectifiers (Rectifier Holder)

1. INSPECT POSITIVE RECTIFIER

(a) Using an ohmmeter, connect one tester probe to the positive (+) terminal and the other to each rectifier terminal.

(b) Reverse the polarity of the tester probes and repeat step (a).

(c) Check that one shows continuity and the other shows no continuity.

If continuity is not as specified, replace the rectifier holder.

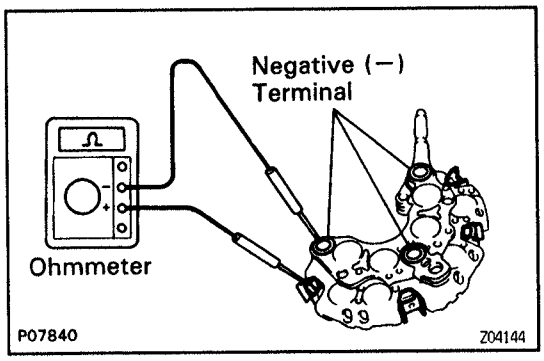

2. INSPECT NEGATIVE RECTIFIER

(a) Using an ohmmeter, connect one tester probe to each negative (–) terminal and the other to each rectifier terminal.

(b) Reverse the polarity of the tester probes and repeat step (a).

(c) Check that one shows continuity and the other shows no continuity.

If continuity is not as specified, replace the rectifier holder.

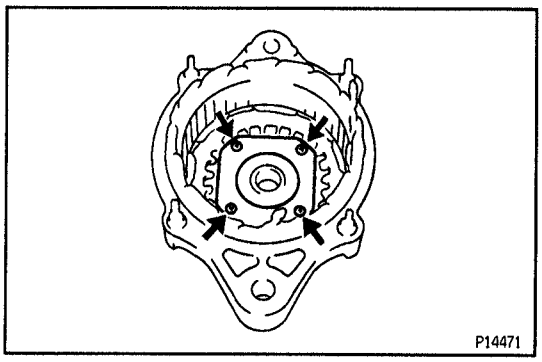

Bearings

1. **INSPECT FRONT BEARING**
   Check that the bearing is not rough or worn.
2. **IF NECESSARY, REPLACE FRONT BEARING**

(a) Remove the 4 screws, bearing retainer and bearing.

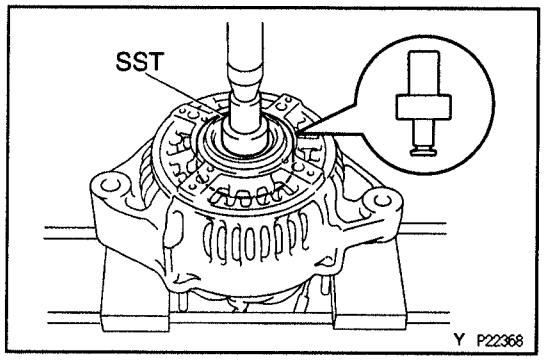

(b) Using SST and press, press out the bearing.
SST 09950–60010 (09951–00260, 09952–06010)

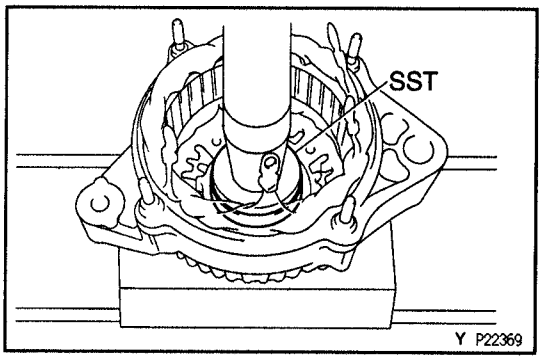

(c) Using SST and a press, press in a new bearing.
SST 09950–60010 (09951–00500)

(d) Install the bearing retainer with the 4 screws.

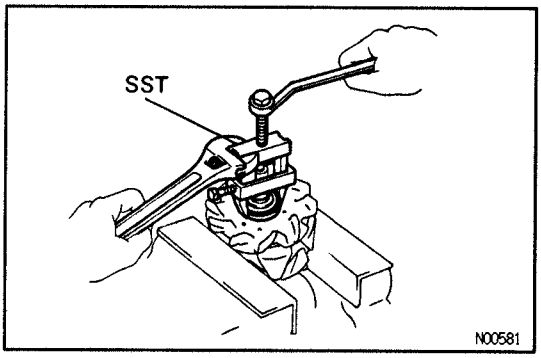

3. **INSPECT REAR BEARING**
   Check that the bearing is not rough or worn.
4. **IF NECESSARY, REPLACE REAR BEARING**

(a) Using SST, remove the bearing covers and bearing.
SST 09820–00021
NOTICE: Be careful not to damage the fan.

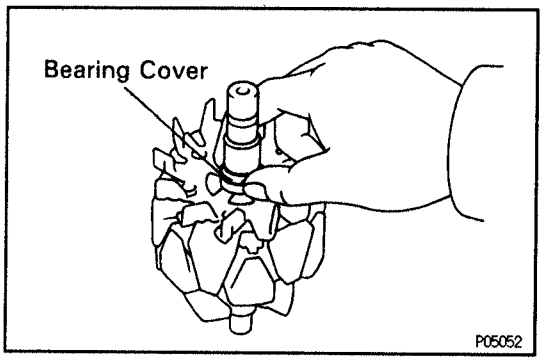

(b) Place the bearing cover on the rotor.

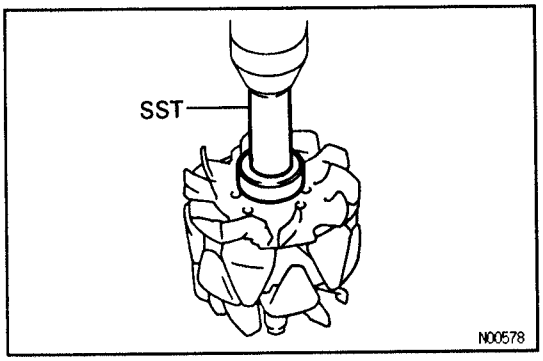

(c) Using SST and a press, press in a new bearing.
SST 09820–00030

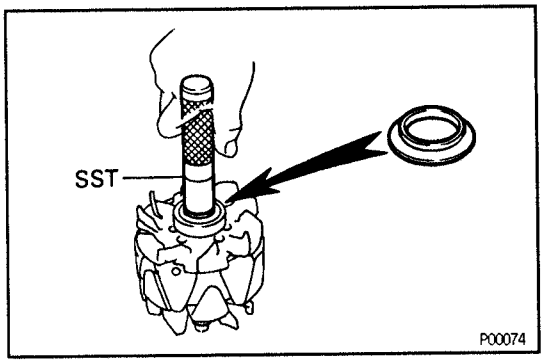

(d) Using SST, push in the bearing cover.
SST 09285–76010

CH

CH0AL–01

GENERATOR ASSEMBLY

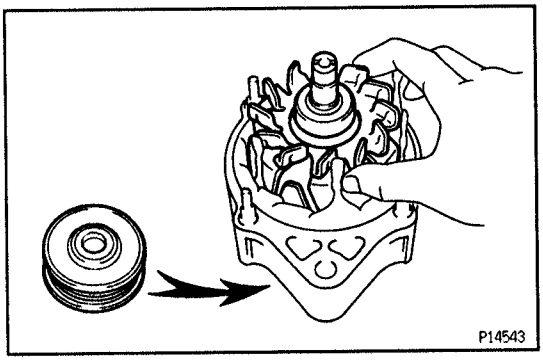

1. **PLACE DRIVE END FRAME ON PULLEY**
2. **INSTALL ROTOR TO DRIVE END FRAME**

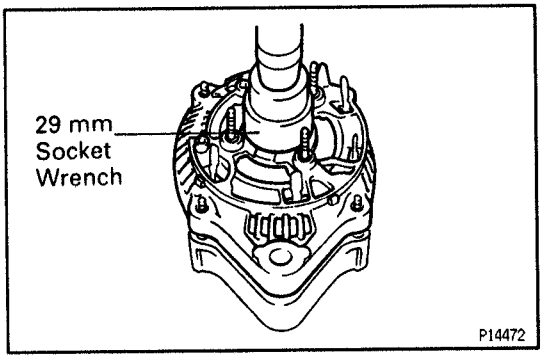

3. **INSTALL RECTIFIER END FRAME**

(a) Using a 29 mm socket wrench and press, slowly press in the rectifier end frame.

(b) Install the 4 nuts.
Torque: 4.5 N·m (46 kgf·cm, 40 in.·lbf)

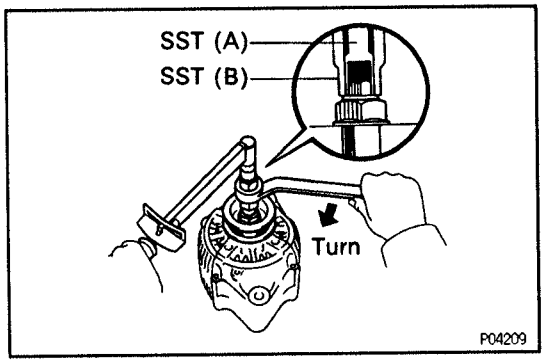

4. **INSTALL PULLEY**

(a) Install the pulley to the rotor shaft by tightening the pulley nut by hand.

(b) Hold SST (A) with a torque wrench, and tighten SST (B) clockwise to the specified torque.
SST 09820–63010
Torque: 39 N·m (400 kgf·cm, 29 ft·lbf)

(c) Check that SST (A) is secured to the pulley shaft.

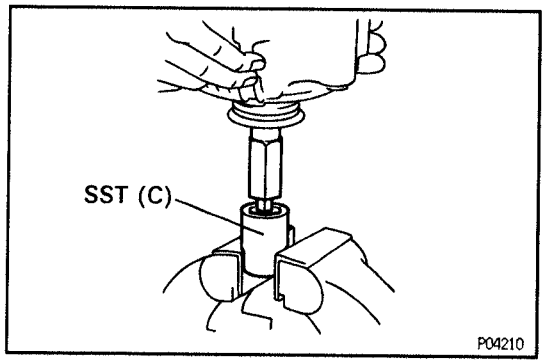

(d) Mount SST (C) in a vise.
(e) Install the generator to SST (C).

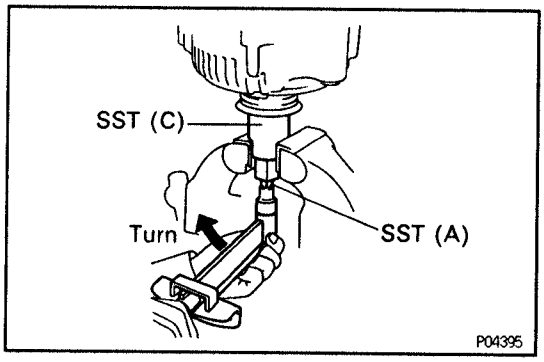

(f) To torque the pulley nut, turn SST (A) in the direction shown in the illustration.
Torque: 110 N·m (1,125 kgf·cm, 81 ft·lbf)
(g) Remove the generator from SST (C).

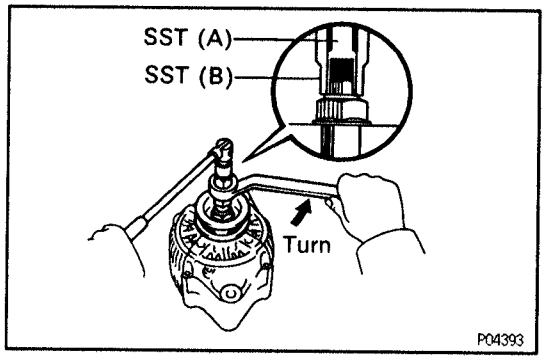

(h) Turn SST (B), and remove SST (A and B).

5. INSTALL RECTIFIER HOLDER

(a) Install the 4 rubber insulators on the lead wires.
(b) Install the rectifier holder with the 4 screws.
Torque: 1.96 N·m (20 kgf·cm, 17.4 in.·lbf)

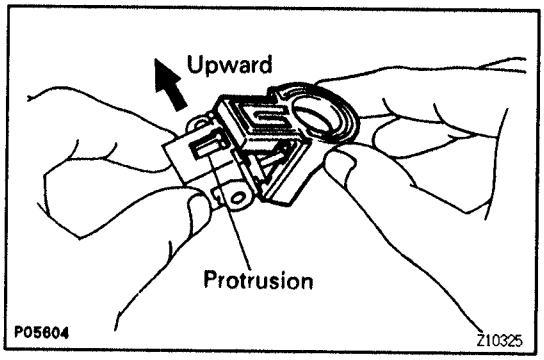

6. INSTALL VOLTAGE REGULATOR AND BRUSH HOLDER

(a) Install the brush holder cover to the brush holder.
NOTICE: Be careful of the holder installation direction.

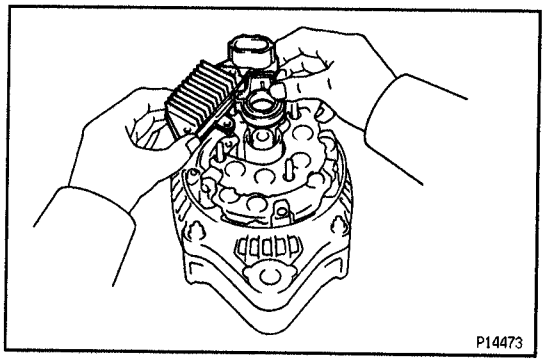

(b) Place the voltage regulator together with the brush holder horizontally on the rectifier end frame.

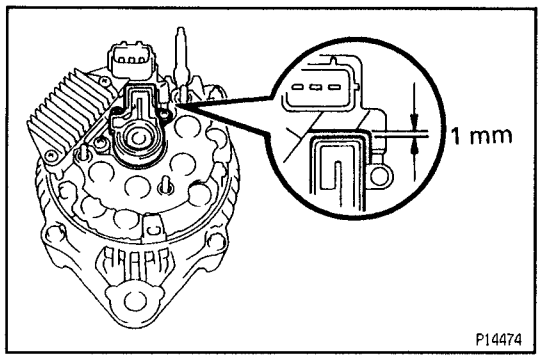

(c) Install the 5 screws until there is a clearance of approx. 1 mm (0.04 in.) between the brush holder and connector.

(d) Fit the brush holder cover.

7. INSTALL REAR END COVER

(a) Install the end cover with the 3 nuts.
Torque: 4.5 N·m (46 kgf·cm, 40 in.·lbf)

(b) Install the terminal insulator with the nut.
Torque: 4.1 N·m (42 kgf·cm, 36 in.·lbf)

8. CHECK THAT ROTOR ROTATES SMOOTHLY

CH0AM–01

GENERATOR INSTALLATION

Installation is in the reverse order of removal.

SERVICE SPECIFICATIONS

CH

SERVICE DATA

CH03M–0A

Battery	Standard voltage	at 20°C (68°F)	12.7 – 12.9 V
Drive belt	Tension		
	New belt		165 ± 10 lbf
	Used belt		115 ± 20 lbf
Generator	Rated output		12 V – 60 A
	Rotor coil resistance		2.8 – 3.0 Ω
	Slip ring diameter	STD	14.2 mm – 14.4 mm (0.559 – 0.567 in.)
	Slip ring diameter	Minimum	12.8 mm (0.504 in.)
	Brush exposed length	STD	10.5 mm (0.413 in.)
	Brush exposed length	Minimum	1.5 mm (0.059 in.)
Voltage regulator	Regulating voltage	at 25°C (77°F)	14.0 – 15.0 V
	Regulating voltage	at 115°C (239°F)	13.5 – 14.3 V

TORQUE SPECIFICATIONS

CH03N–08

Part tightened	N·m	kgf·cm	ft·lbf
Drive end frame x Rectifier end frame	4.5	46	40 in.·lbf
Generator pulley nut	110	1,125	81
Rectifier holder set screw	1.96	20	17.4 in.·lbf
Rear end cover x Rectifier end frame	4.5	46	40 in.·lbf
Terminal insulator mounting nut	4.1	42	36 in.·lbf
Pivot bolt (For generator)	59	600	43
Lock bolt (For generator)	29	300	21
Generator wire mounting nut	9.8	100	7.2

(5VZ–FE)

PRECAUTION

CH031–04

1. Check that the battery cables are connected to the correct terminals.
2. Disconnect the battery cables when the battery is given a quick charge.
3. Do not perform tests with a high voltage insulation resistance tester.
4. Never disconnect the battery while the engine is running.

PREPARATION

SST (SPECIAL SERVICE TOOLS)

CH034–03

	09285–76010	Injection Pump Camshaft Bearing Cone Replacer	Rotor rear bearing cover
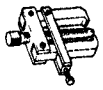	09286–46011	Injection Pump Spline Shaft Puller	Rectifier end frame
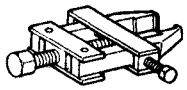	09820–00021	Alternator Rear Bearing Puller	
	09820–00030	Alternator Rear Bearing Replacer	
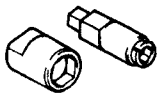	09820–63010	Alternator Pulley Set Nut Wrench Set	
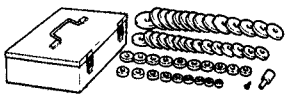	09950–60010	Replacer Set	Rotor front bearing
	(09951–00260)	Replacer 26	
	(09951–00500)	Replacer 50	
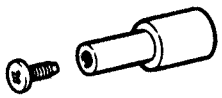	(09952–06010)	Adapter	

RECOMMENDED TOOLS

CH035–04

	09082–00050 TOYOTA Electrical Tester Set.	

EQUIPMENT

CH036–03

Battery specific gravity gauge	Battery
Belt tension gauge	
Torque wrench	
Vernier calipers	Rotor (Slip ring)

CH

ON–VEHICLE INSPECTION

CH0AN–01

1. **Except Delco Battery:**
   CHECK BATTERY ELECTROLYTE LEVEL AND VOLTAGE

(a) Check the electrolyte quantity of each cell.
If under the lower level, replace the battery (or add distilled water if possible) and check the charging system.

(b) Measure the battery voltage between the terminals negative (–) and positive (+) of the battery.
Standard voltage:
At 20°C (68°F): 12.7 – 12.9 V
HINT:
- Before measuring the voltage, turn the ignition switch OFF and turn off the electrical systems (headlight, blower motor, rear defogger etc.).
- If the vehicle has been running, wait 20 minutes or more after the vehicle stops before measuring the battery voltage to remove the surface charge.

If the voltage is less than the specification, charge the battery.

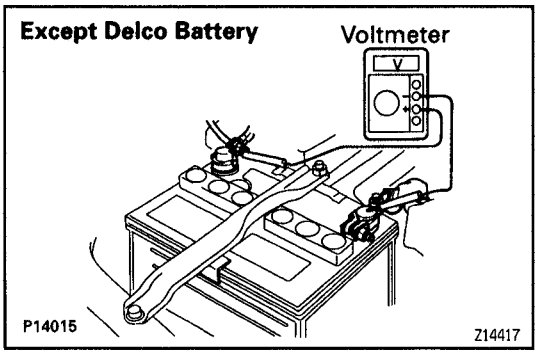

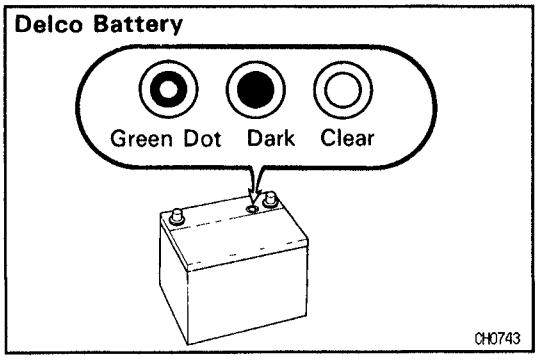

2. **Delco Battery:**
   CHECK HYDROMETER
   Green Dot visible: Battery is adequately charged.
   Dark (Green Dot not visible): Battery must be charged.
   Clear or Light Yellow: Replace battery.
   HINT: There is no need to add water during the entire service life of the battery.

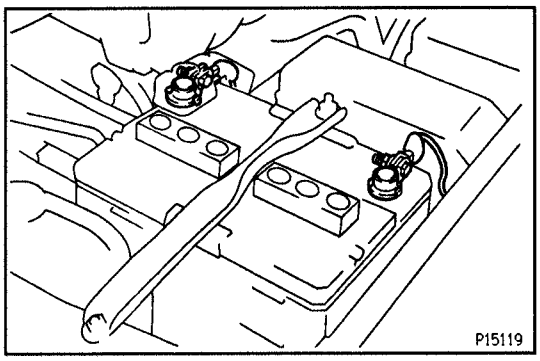

3. CHECK BATTERY TERMINALS, FUSIBLE LINK AND FUSES

(a) Check that the battery terminals are not loose or corroded.

(b) Check the fusible link and fuses for continuity.

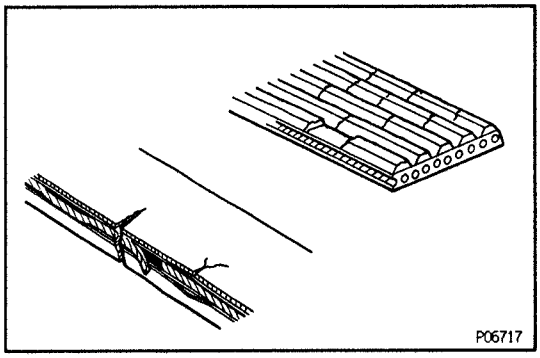

4. INSPECT DRIVE BELT

(a) Visually check the belt for excessive wear, frayed cords etc.

HINT: Cracks on the ribbed side of the belt are considered acceptable.

If the belt has chunks missing from the ribs, it should be replaced.

(b) Using a belt tension gauge, check the drive belt tension.

Belt tension gauge:

Nippondenso BTG 20 (95506–00020) or
Borroughs No. BT–33–73F

Drive belt tension:

New belt

160 ± 20 lbf

Used belt.

100 ± 20 lbf

If necessary, adjust the drive belt tension.

HINT:

- "New belt" refers to a belt which has been used less than 5 minutes on a running engine.
- "Used belt" refers to a belt which has been used on a running engine for 5 minutes or more.
- After installing the drive belt, check that it fits properly in the ribbed grooves. Check with your hand to confirm that the belt has not slipped out of the groove on the bottom of the crank pulley.
- After installing a new belt, run the engine for approx. 5 minutes and then recheck the tension.

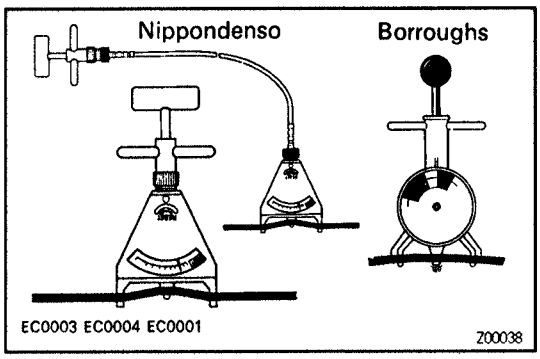

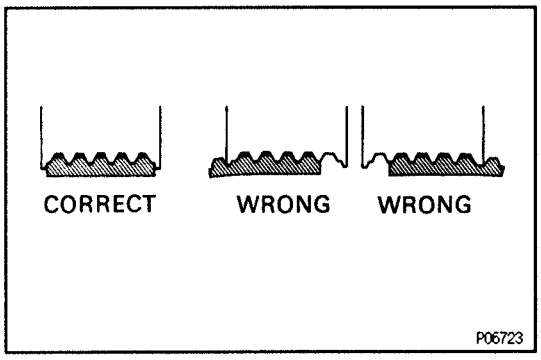

5. INSPECT FUSES FOR CONTINUITY

- ENGINE 10A
- CHARGE 7.5A
- IGN 7.5A

6. VISUALLY CHECK GENERATOR WIRING AND LISTEN FOR ABNORMAL NOISES

(a) Check that the wiring is in good condition.

(b) Check that there is no abnormal noise from the generator while the engine is running.

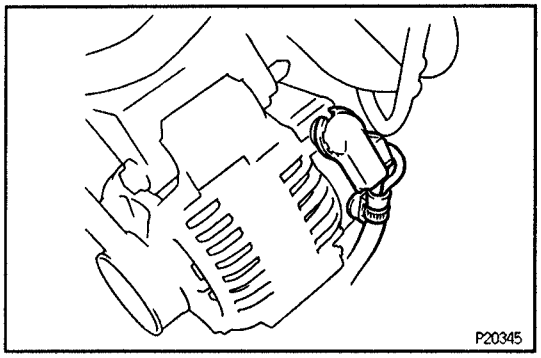

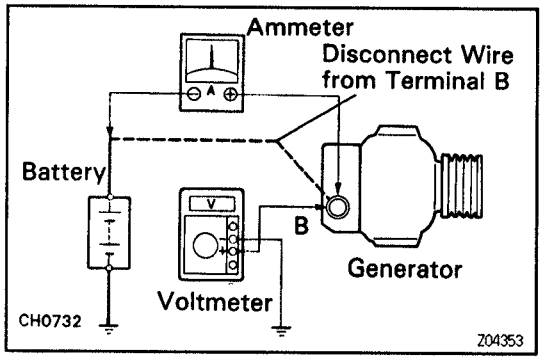

7. CHECK CHARGING CIRCUIT WITHOUT LOAD

HINT: If a battery/generator tester is available, connect the tester to the charging circuit according to the manufactuer's instructions.

(a) If a tester is not available, connect a voltmeter and ammeter to the charging circuit as follows:

- Disconnect the wire from terminal B of the generator and connect the wire to the negative (–) terminal of the ammeter.
- Connect the test lead from the positive (+) terminal of the ammeter to terminal B of the generator.
- Connect the positive (+) lead of the voltmeter to terminal B of the generator.
- Ground the negative (–) lead of the voltmeter.

(b) Check the charging circuit as follows:

With the engine running from idling to 2,000 rpm, check the reading on the ammeter and voltmeter.

Standard amperage:

10 A or less

Standard voltage:

At 25 °C (77 °F): 14.0 – 15.0 V

At 115 °C (239 °F): 13.5 – 14.3 V

If the voltage reading is greater than the standard voltage, replace the voltage regulator.

If the voltage reading is less than the standard voltage, check the voltage regulator and generator as follows:

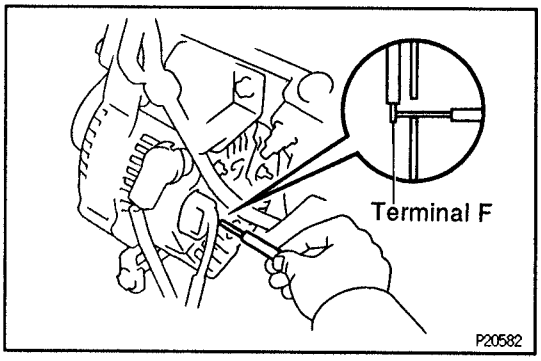

- With terminal F grounded, start the engine and check the voltage reading of terminal B.
- If the voltage reading is higher than the standard voltage, replace the voltage regulator.
- If the voltage reading is less than the standard voltage, repair the generator.

8. INSPECT CHARGING CIRCUIT WITH LOAD

(a) With the engine running at 2,000 rpm, turn on the high beam headlights and place the heater fan control switch to HI.

(b) Check the reading on the ammeter.

Standard amperage:

30 A or more

If the ammeter reading is less than 30 A, repair the generator.

HINT: If the battery is fully charged, the indication will sometimes be less than 30 A.

GENERATOR

CH011–0X

COMPONENTS FOR REMOVAL AND INSTALLATION

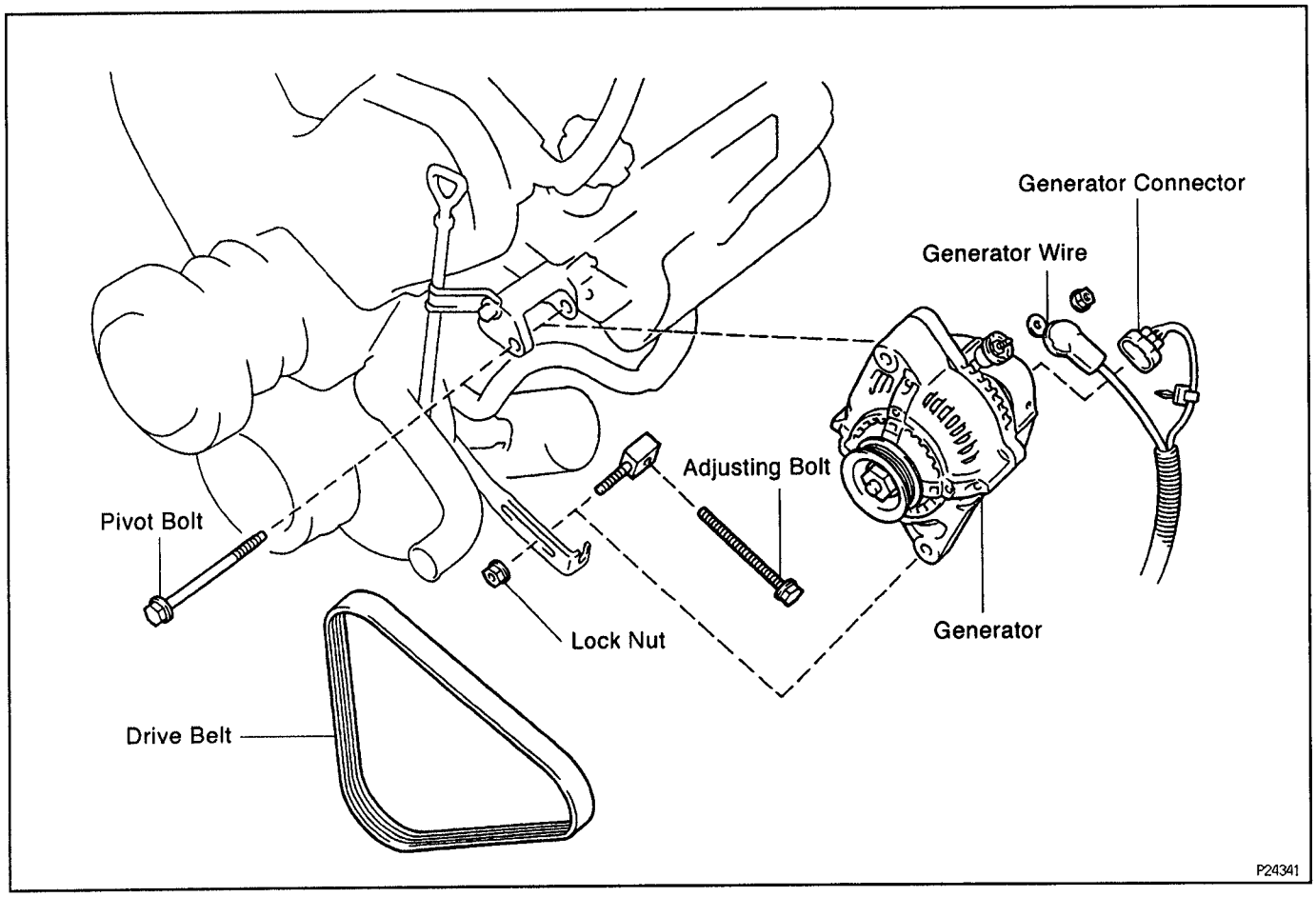

CH09E–02

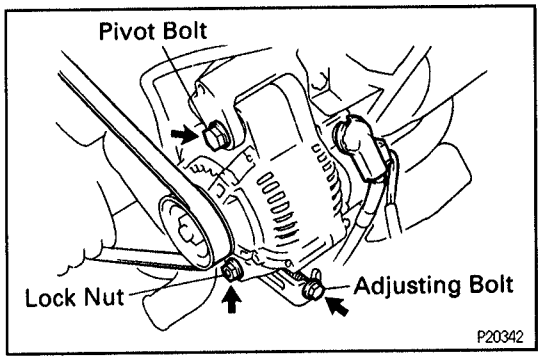

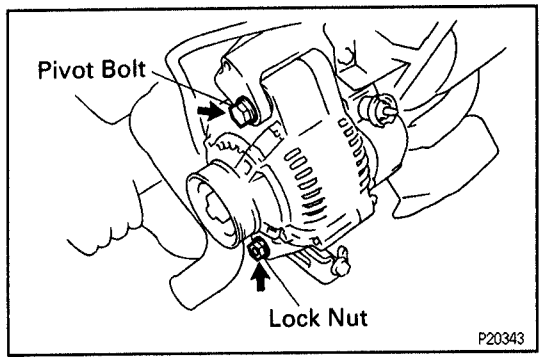

GENERATOR REMOVAL

1. DISCONNECT WIRING FROM GENERATOR

(a) Disconnect the connector from the generator.

(b) Remove the nut and disconnect the wire from the generator.

2. REMOVE GENERATOR DRIVE BELT

Loosen the adjust lock nut, adjusting bolt and pivot bolt, and remove the drive belt.

3. REMOVE GENERATOR

(a) Remove the pivot bolt and adjusting lock nut.

(b) Remove the generator.

Torque:

Pivot bolt: 51 N·m (520kgf·cm, 38 ft·lbf)

Lock Nut: 18.5 N·m (189kgf·cm, 25 ft·lbf)

COMPONENTS FOR DISASSEMBLY AND ASSEMBLY

CH039–06

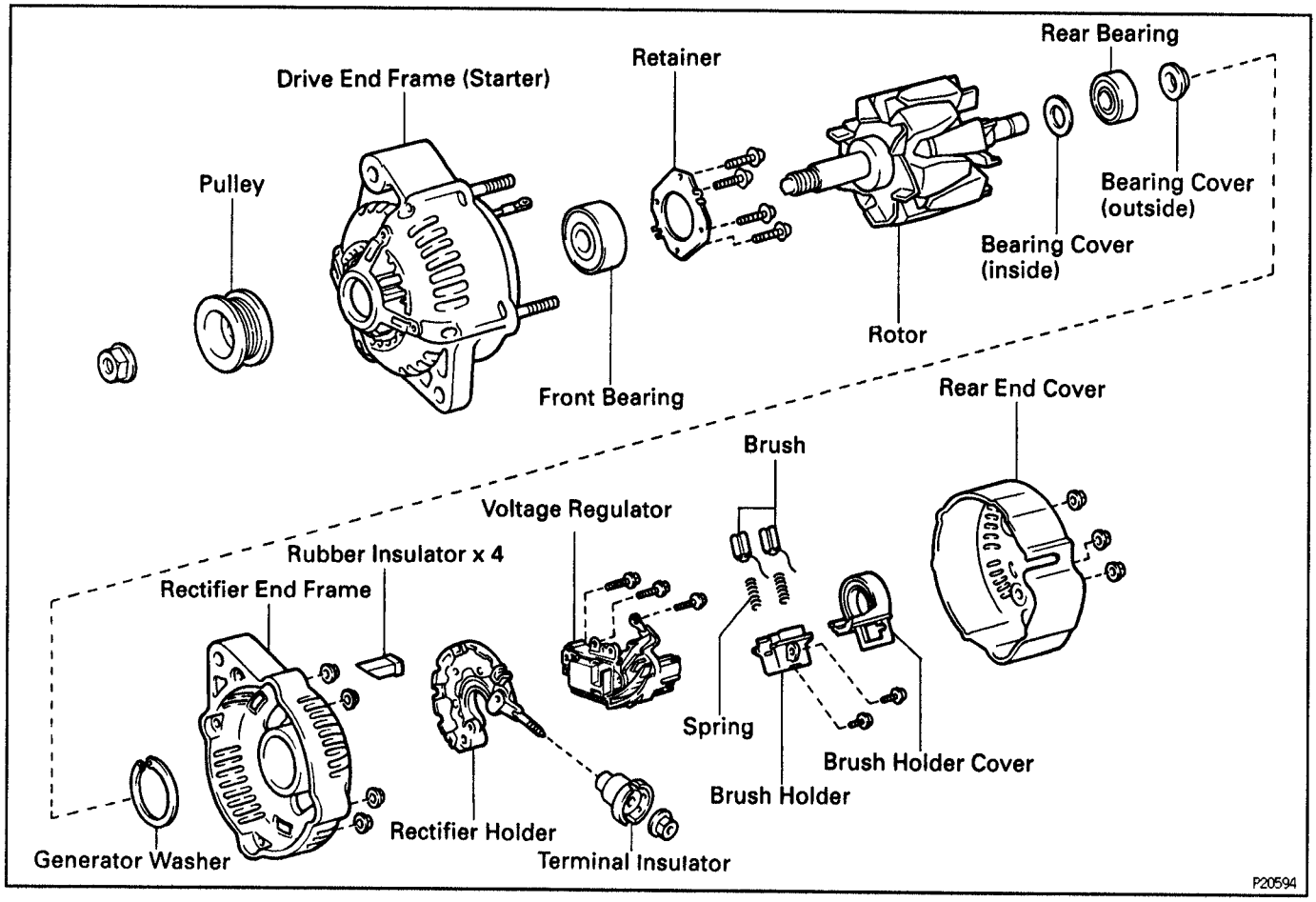

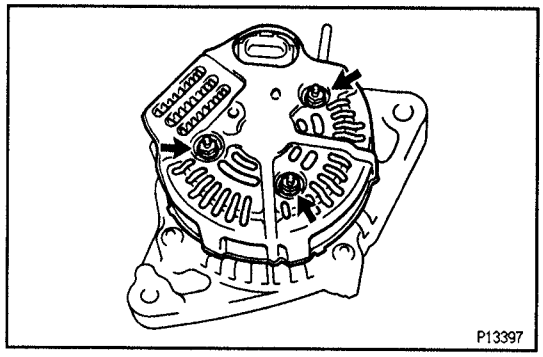

GENERATOR DISASSEMBLY

CH0AP–01

1. REMOVE REAR END COVER

(a) Remove the nut and terminal insulator.
(b) Remove the 3 nuts and end cover.

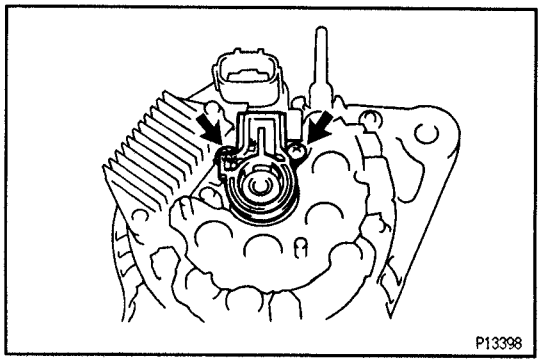

2. REMOVE BRUSH HOLDER

(a) Remove the 2 screws, brush holder and cover.

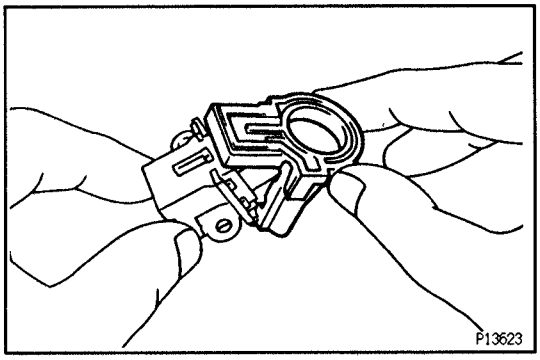

(b) Remove the brush holder cover from the brush holder.

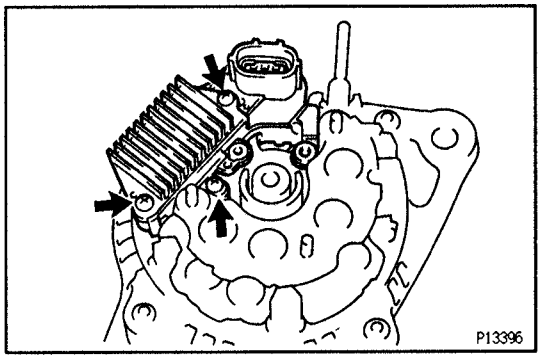

3. REMOVE VOLTAGE REGULATOR

Remove the 3 screws and voltage regulator.

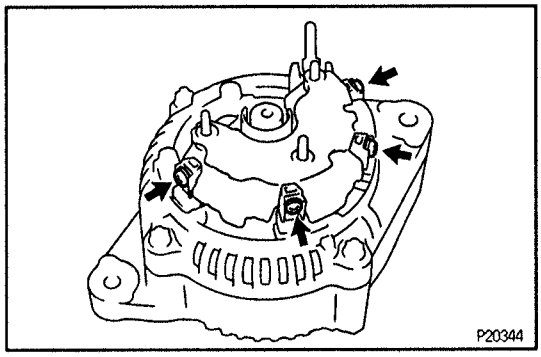

4. REMOVE RECTIFIER HOLDER

(a) Remove the 4 screws and rectifier holder.

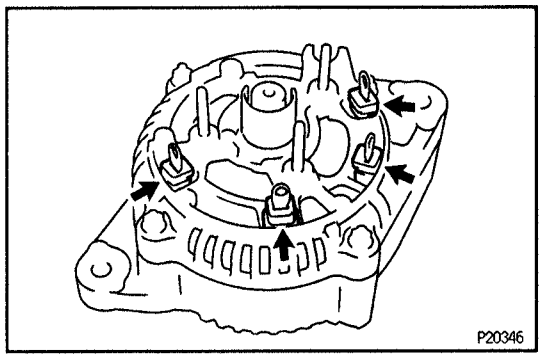

(b) Remove the 4 rubber insulators.

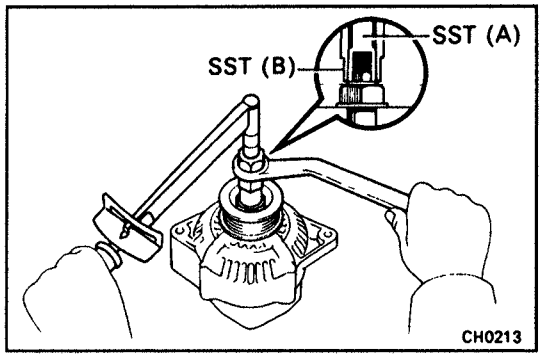

5. REMOVE PULLEY

(a) Hold SST (A) with a torque wrench, and tighten SST (B) clockwise to the specified torque.
SST 09820–63010
Torque: 39 N·m (400 kgf·cm, 29 ft·lbf)

(b) Check that SST (A) is secured to the rotor shaft.

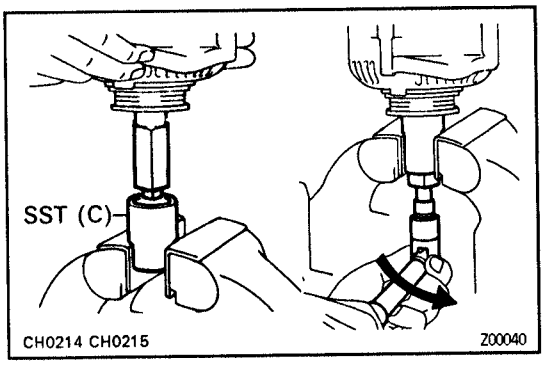

(c) As shown in the illustration, mount SST (C) in a vise, and install the generator with SST (A) and (B) to SST (C).

(d) To loosen the pulley nut, turn SST (A) in the direction shown in the illustration.

NOTICE: To prevent damage to the rotor shaft, do not loosen the pulley nut more than one–half of a turn.

(e) Remove the generator with SST (A) and (B) from SST (C).

(f) Turn SST (B) and remove SST (A) and (B).

(g) Remove the pulley nut and pulley.

6. REMOVE RECTIFIER END FRAME

(a) Remove the 4 nuts.

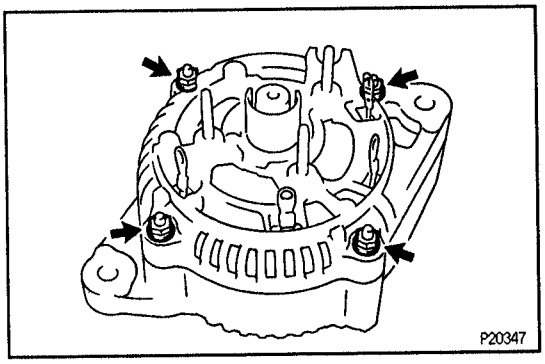

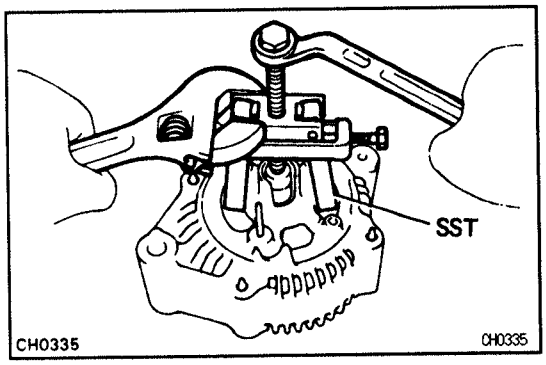

(b) Using SST, remove the rectifier end frame.
SST 09286–46011

(c) Using snap ring pliers, remove the generator washer from the rectifier end frame.

7. REMOVE ROTOR FROM DRIVE END FRAME

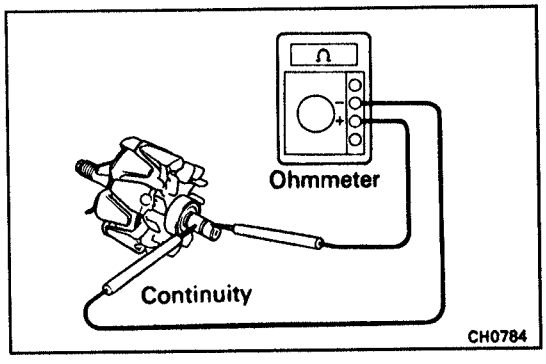

GENERATOR INSPECTION AND REPAIR CH0AQ–01

Rotor

1. INSPECT ROTOR FOR OPEN CIRCUIT

Using an ohmmeter, check that there is continuity between the slip rings.

Standard resistance:

At 20°C (68°F): 2.8 – 3.0 Ω

If there is no continuity, replace the rotor.

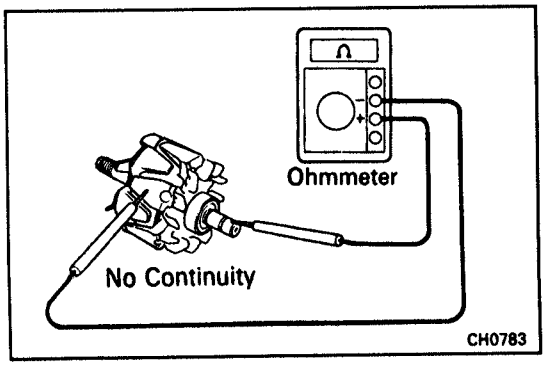

2. INSPECT ROTOR FOR GROUND

Using an ohmmeter, check that there is no continuity between the slip ring and rotor.

If there is continuity, replace the rotor.

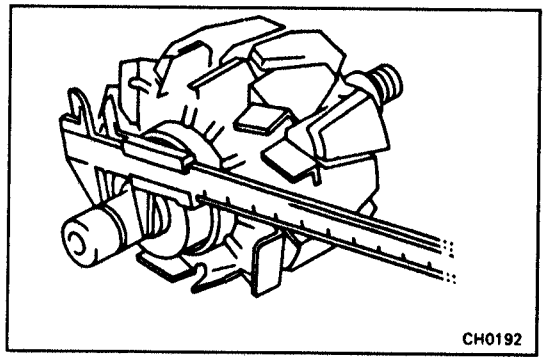

3. INSPECT SLIP RINGS

(a) Check that the slip rings are not rough or scored.
If rough or scored, replace the rotor.

(b) Using vernier calipers, measure the slip ring diameters.

Standard diameter:

14.2 – 14.4 mm (0.559 – 0.567 in.)

Minimum diameter:

12.8 mm (0.504 in.)

If the diameter is less than the minimum, replace the rotor.

Stator (Drive End Frame)

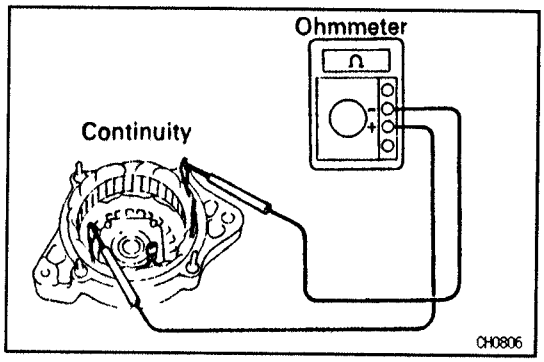

1. INSPECT STATOR FOR OPEN CIRCUIT

Using an ohmmeter, check that there is continuity between the coil leads.
If there is no continuity, replace the drive end frame assembly.

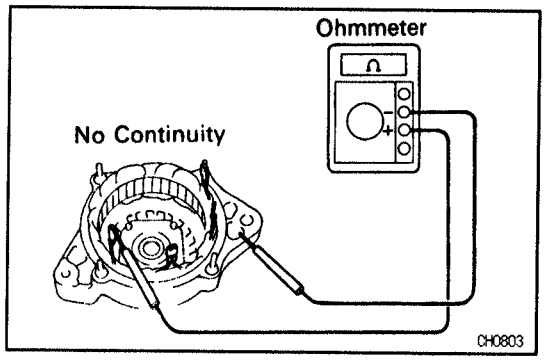

2. INSPECT STATOR FOR GROUND

Using an ohmmeter, check that there is no continuity between the coil leads and drive end frame.
If there is continuity, replace the drive end frame assembly.

Brushes

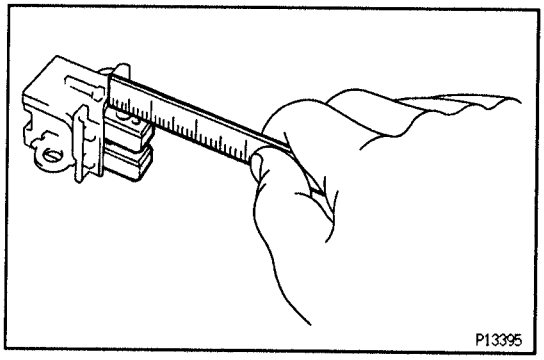

1. INSPECT EXPOSED BRUSH LENGTH

Using a scale, measure the exposed brush length.

Standard exposed length:

10.5 mm (0.413 in.)

Minimum exposed length:

1.5 mm (0.059 in.)

If the exposed length is less than the minimum, replace the brushes.

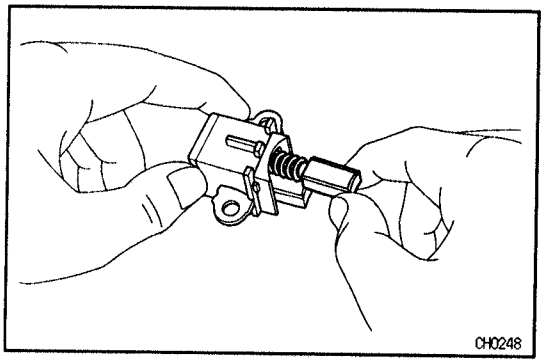

2. IF NECESSARY, REPLACE BRUSHES

(a) Unsolder and remove the brush and spring.

(b) Run the wire of the brush through the hole in the brush holder, and insert the spring and brush into the brush holder.

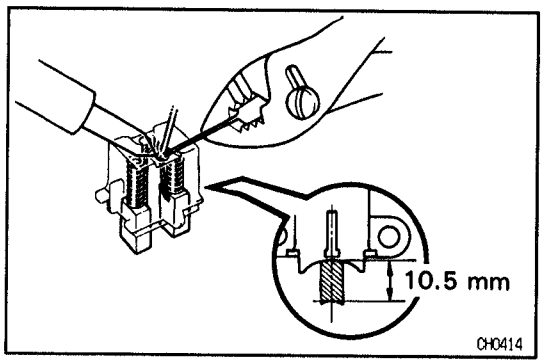

(c) Solder the brush wire to the brush holder at the exposed length.
Exposed length:
10.5 mm (0.413 in.)
(d) Check that the brush moves smoothly in the brush holder.
(e) Cut off the excess wire.
(f) Apply insulation paint to the soldered point.

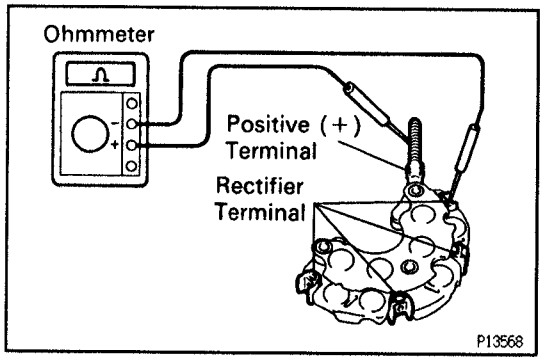

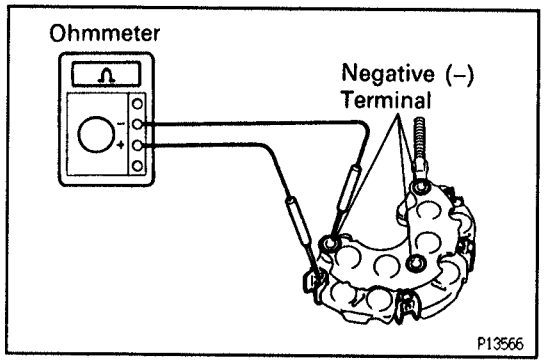

Rectifiers (Rectifier Holder)

1. INSPECT POSITIVE RECTIFIER
(a) Using an ohmmeter, connect one tester probe to the positive (+) terminal and the other to each rectifier terminal.
(b) Reverse the polarity of the tester probes and repeat step (a).
(c) Check that one shows continuity and the other shows no continuity.
If continuity is not as specified, replace the rectifier holder.

2. INSPECT NEGATIVE RECTIFIER
(a) Using an ohmmeter, connect one tester probe to each negative (–) terminal and the other to each rectifier terminal.
(b) Reverse the polarity of the tester probes and repeat step (a).
(c) Check that one shows continuity and the other shows no continuity.
If continuity is not as specified, replace the rectifier holder.

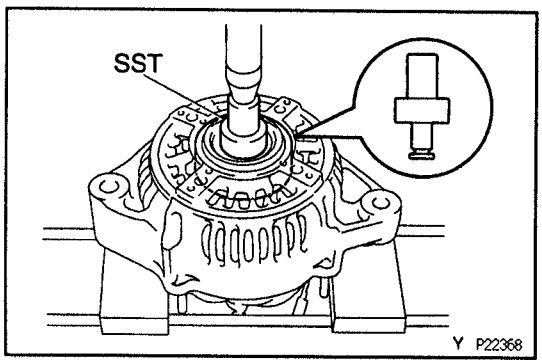

Bearings

1. INSPECT FRONT BEARING
Check that the bearing is not rough or worn.

2. IF NECESSARY, REPLACE FRONT BEARING
(a) Remove the 4 screws and bearing retainer.
(b) Using a press and socket wrench, press out the front bearing.
SST 09950–60010 (09951–00260, 09952–06010)

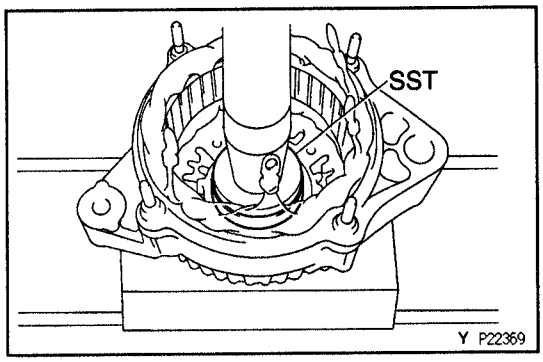

(c) Using SST and a press, press the front bearing into the drive end frame.
SST 09950–60010 (09951–00500)
(d) Install the bearing retainer with the 4 screws.

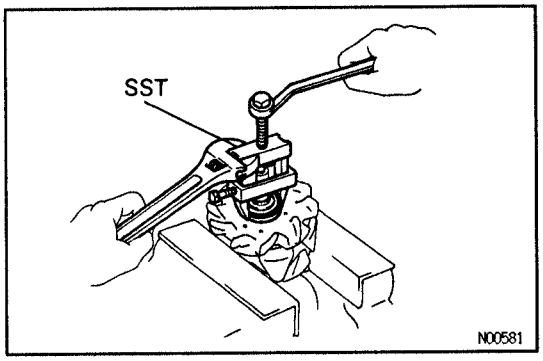

3. INSPECT REAR BEARING
Check that the bearing is not rough or worn.
4. IF NECESSARY, REPLACE REAR BEARING
(a) Using SST, remove the bearing cover and bearing.
SST 09820–00021
(b) Remove the bearing cover (inside).

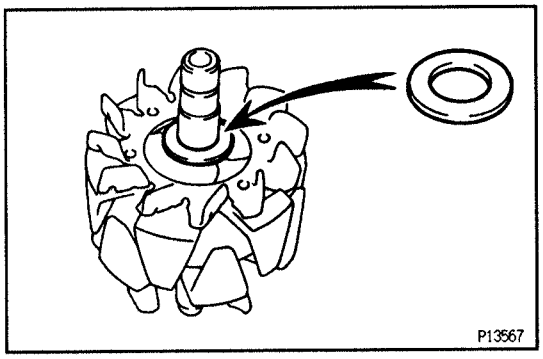

(c) Place the bearing cover (inside) on the rotor.

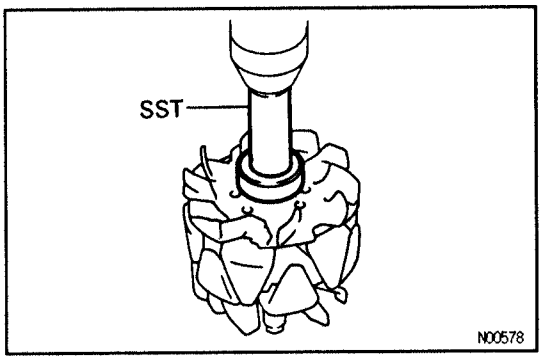

(d) Using SST and a press, press in a new bearing and the bearing cover.
SST 09820–00030

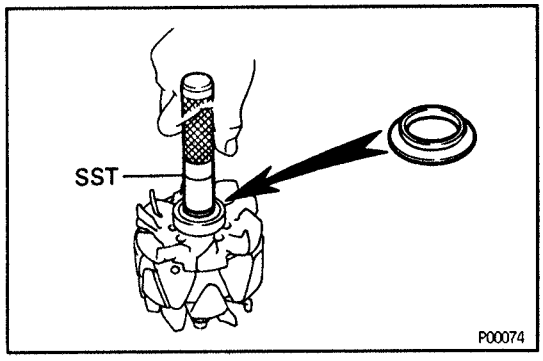

(e) Using SST, push in the bearing cover (outside).
SST 09285–76010

CHOAR–01

GENERATOR ASSEMBLY

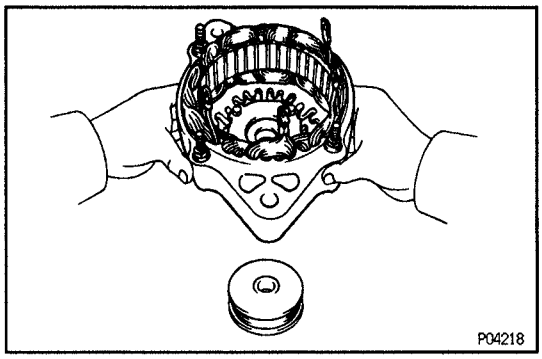

1. PLACE RECTIFIER END FRAME ON PULLEY
2. INSTALL ROTOR TO DRIVE END FRAME

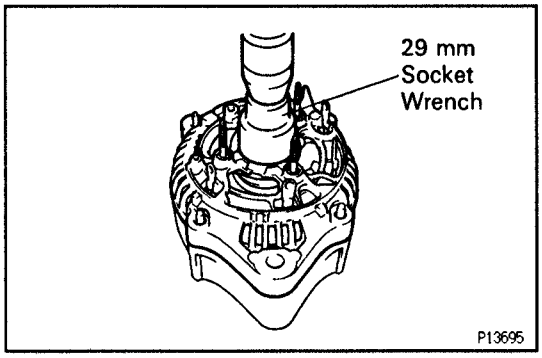

3. INSTALL RECTIFIER END FRAME

(a) Install the generator washer to the rectifier end frame.
NOTICE: Be careful of the generator washer installation direction.

(b) Using a 29 mm socket wrench and press, slowly press in the rectifier end frame.

(c) Install the 4 nuts.
Torque: 4.5 N·m (45 kgf·cm, 39 in.·lbf)

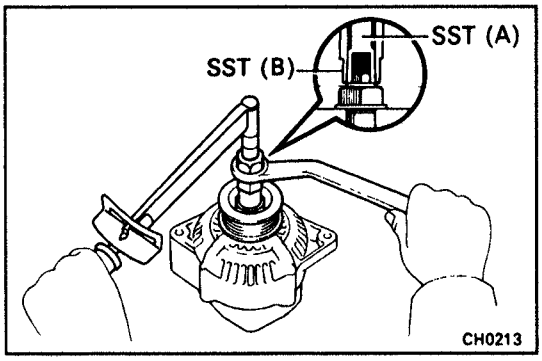

4. INSTALL PULLEY

(a) Install the pulley to the rotor shaft by tightening the pulley nut by hand.

(b) Hold SST (A) with a torque wrench, and tighten SST (B) clockwise to the specified torque.
SST 09820–63010
Torque: 39 N·m (400 kgf·cm, 29 ft·lbf)

(c) Check that SST (A) is secured to the pulley shaft.

(d) As shown in the illustration, mount SST (C) in a vise, and install the generator with SST (A) and (B) to SST (C).

(e) To torque the pulley nut, turn SST (A) in the direction shown in the illustration.
Torque: 110 N·m (1,125 kgf·cm, 81 ft·lbf)

(f) Remove the generator with SST (A) and (B) from SST (C).

(g) Turn SST (B) and remove SST (A) and (B).

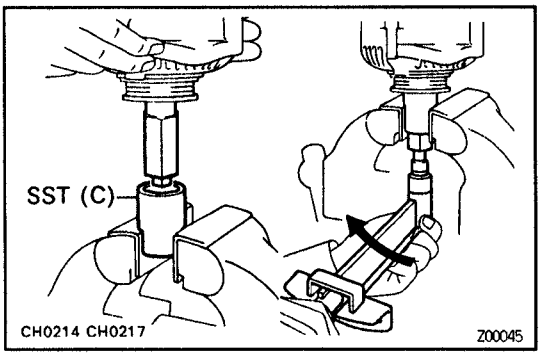

5. INSTALL RECTIFIER HOLDER

(a) Install the 4 rubber insulators on the lead wires.

(b) Install the rectifier with the 4 screws.
Torque: 2.0 N·m (20 kgf·cm, 18 in.·lbf)

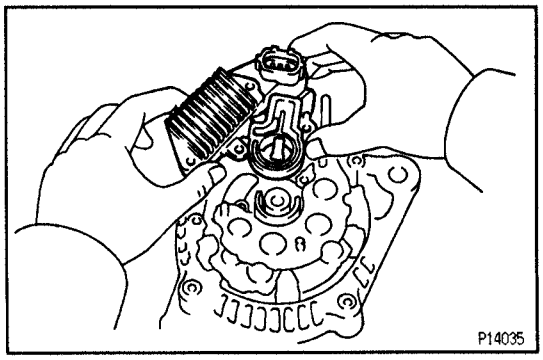

6. INSTALL BRUSH HOLDER AND VOLTAGE REGULATOR

(a) Place the brush holder cover to the brush holder.

(b) Install the voltage regulator and brush holder to the rear end frame horizontally as shown in the illustration.
HINT: Check that the brush holder's cover doesn't slip to one side during installation.

CH

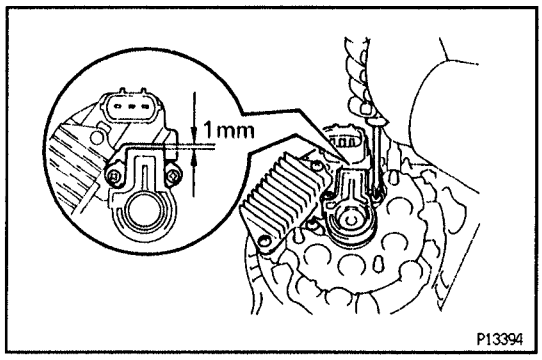

(c) Tighten the 5 screws until there is a clearance of at least 1 mm (0.04 in.) between the brush holder cover and connector.

7. INSTALL REAR END COVER

(a) Install the end cover with the 3 nuts.
Torque: 4.5 N·m (45 kgf·cm, 39 in.·lbf)

(b) Install the terminal insulator with the nut.
Torque: 4.1 N·m (42 kgf·cm, 36 in.·lbf)

8. MAKE SURE ROTOR ROTATES SMOOTHLY

GENERATOR INSTALLATION

CH0AB–01

Installation is in the reverse order of removal.

CH

SERVICE SPECIFICATIONS

SERVICE DATA

CH03E–07

Battery	Voltage	at 20°C (68°F)	12.7 – 12.9 V
Drive belt	Tension	New belt	160 ± 20
		Used belt	100 ± 20
Generator	Rated output ampere		12 V – 60 A
	Rotor coil resistance	at 20°C (68°F)	10.5 mm (0.413 in.)
	Slip ring diameter	STD	1.5 mm (0.059 in.)
		Minimum	2.8 – 3.0 Ω
	Brush exposed length	STD	14.2 – 14.4 mm (0.559 – 0.567 in.)
		Minimum	12.8 mm (0.504 in.)
Generator regulator	Regulating voltage	at 25°C (77°F)	14.0 – 15.0 V
		at 115°C (239°F)	13.5 – 14.3 V

TORQUE SPECIFICATIONS

CH03F–05

Part tightened	N·m	kgf·cm	ft·lbf
Generator x Generator bracket	51	520	38
Generator x Adjusting lever	18.5	189	25
Rectifier end frame x Drive end frame	4.5	45	39 in.·lbf
Generator pulley x Rotor	110	1,125	81
Drive end frame x Voltage regulator	2.0	20	17 in.·lbf
Generator rear end cover x Rectifier end frame	4.5	45	39 in.·lbf
Terminal insulator x Rectifier Holder	4.1	42	36 in.·lbf

CLUTCH

PREPARATION ..... CL– 2
TROUBLESHOOTING ..... CL– 3
CLUTCH PEDAL ..... CL– 4
CLUTCH MASTER CYLINDER ..... CL– 7
CLUTCH RELEASE CYLINDER ..... CL– 9
CLUTCH UNIT ..... CL– 10
SERVICE SPECIFICATIONS ..... CL– 14

PREPARATION

CL003-0R

SST(SPECIAL SERVICE TOOLS)

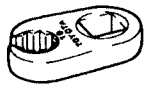	09023–00100	Union Nut Wrench 10 mm	Clutch line
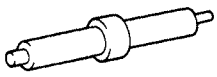	09301–00110	Clutch Guide Tool	
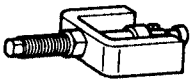	09303–35011	Input Shaft Front Bearing Puller	
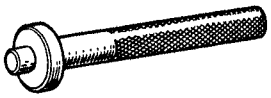	09304–30012	Input Shaft Front Bearing Replacer	
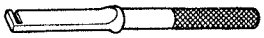	09333–00013	Clutch Diaphragm Spring Aligner	

CL

CL005-0B

RECOMMENDED TOOLS

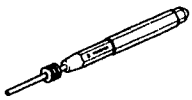	09031–00030	Pin Punch .	Reservoir tank
	09082–00050	TOYOTA Electrical Tester Set.	
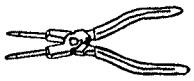	09905–00013	Snap Ring Pliers .	

CL004-0B

EQUIPMENT

Calipers	
Torque wrench	
Dial indicator with magnetic base	

TROUBLESHOOTING

CL005-09
Use the table below to help you find the cause of the problem. The numbers indicate the priority of the likely cause of the problem. Check each part in order. If necessary, replace these parts.

See Page / Parts Name / Trouble	Clutch pedal (Freeplay out of adjustment)	Clutch line (Air in line)	Master cylinder cup (Damaged)	Release cylinder cup (Damaged)	Engine mounting (Loosen)	Release bearing (Worn, dirty or damaged)	Input shaft bearing (Worn or damaged)	Clutch disc (Out of true)	Clutch disc (Runout is excessive)	Clutch disc (Lining broken)	Clutch disc (Dirty or burred)	Clutch disc (Oily)	Clutch disc (Worn out)	Clutch disc torsion rubber (Damaged)	Clutch disc (Glazed)	Clutch disc (Lack of spline grease)	Diaphragm spring (Damaged)	Diaphragm spring (Out of tip alignment)	Pressure plate (Distortion)	Flywheel (Distortion)
See Page	CL-4	–	CL-7	CL-9	–	CL-10	MT-21 MT-19	CL-10	CL-10	CL-10	CL-10	CL-10	CL-10	CL-10	CL-10	CL-13	CL-10	CL-12	CL-10	–
Clutch grabs/chatters					1				2			2	2	2	2			2		
Clutch pedal spongy		1	2	2																
Clutch noisy						1	2							3						
Clutch slips	1											2	2				3		4	5
Clutch does not disengage	1	2	3	4			5	6	6	6	6	6				6	7	7	8	

V05513

CL

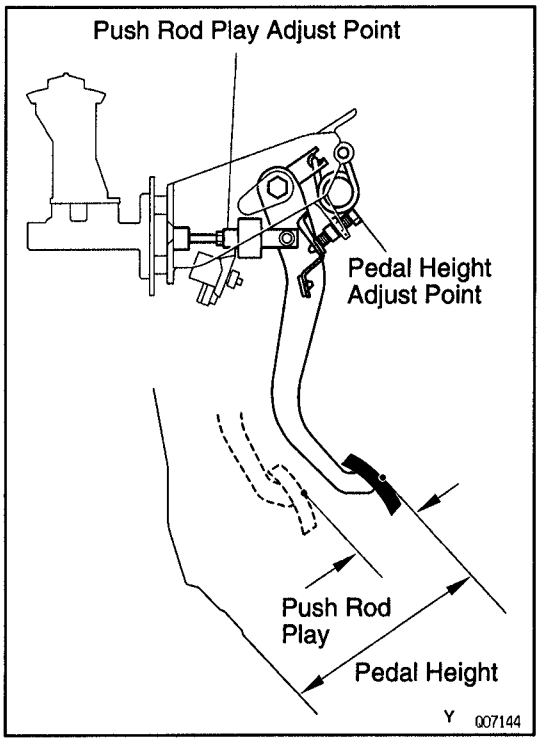

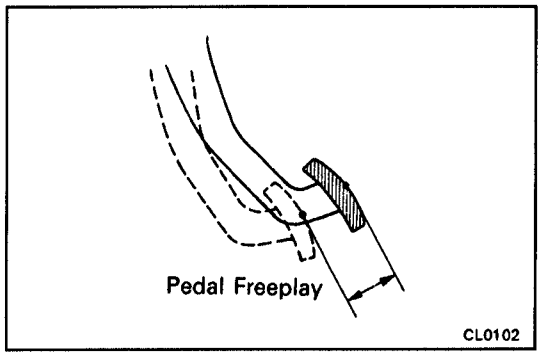

CLUTCH PEDAL

CL02Y-07

CLUTCH PEDAL CHECK AND ADJUSTMENT

1. CHECK THAT PEDAL HEIGHT IS CORRECT

Pedal height from floor panel:

170.0 – 180.0 mm (6.693 – 7.087 in.)

Pedal height from asphalt sheet:

167.0 – 177.0 mm (6.575 – 6.968 in.)

2. IF NECESSARY, ADJUST PEDAL HEIGHT

Loosen the lock nut and turn the stopper bolt until the height is correct. Tighten the lock nut.

3. CHECK THAT PEDAL FREEPLAY AND PUSH ROD PLAY ARE CORRECT

Push in on the pedal until the beginning of clutch resistance is felt.

Pedal freeplay:

5.0–15.0 mm (0.197–0.591 in.)

Gently push on the pedal until the resistance begins to increase a little.

Push rod play at pedal top:

1.0–5.0 mm (0.039–0.197 in.)

4. IF NECESSARY, ADJUST PEDAL FREEPLAY AND PUSH ROD PLAY

(a) Loosen the lock nut and turn the push rod until the freeplay and push rod play are correct.

(b) Tighten the lock nut.

(c) After adjusting the pedal freeplay, check the pedal height.

(d) Connect the air duct and install the lower finish panel.

5. CHECK CLUTCH RELEASE POINT

(a) Pull the parking brake lever and install wheel stopper.

(b) Start the engine and idle the engine.

(c) Without depressing the clutch pedal, slowly shift the shift lever into reverse position until the gears contact.

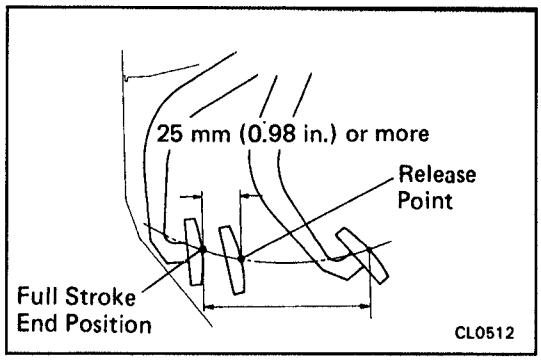

(d) Gradually depress the clutch pedal and measure the stroke distance from the point the gear noise stops (release point) up to the full stroke end position.

Standard distance:

25 mm (0.98 in.) or more

(From pedal stroke end position to release point)

If the distance not as specified, perform the following operation.

- Check pedal height.
- Check push rod play and pedal freeplay.
- Bleed the clutch line.
- Check the clutch cover and disc.

6. CHECK CLUTCH START SYSTEM

(a) Check that the engine does not start when the clutch pedal is released.

(b) Check that the engine starts when the clutch pedal is fully depressed.

If necessary, replace the clutch start switch.

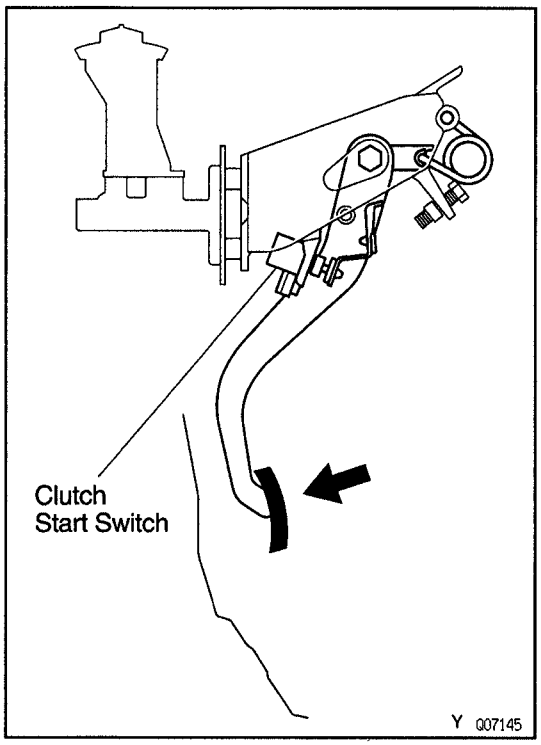

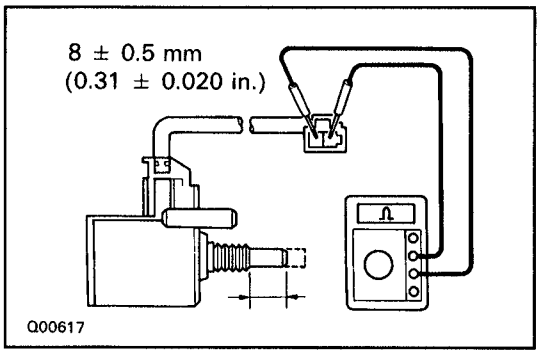

7. CHECK CONTINUITY OF CLUTCH START SWITCH

Check the continuity between terminals when the switch is ON and OFF.

Switch position	Condition
ON (pushed)	Continuity
OFF (free)	No Continuity

If continuity is not as specified, replace the switch.

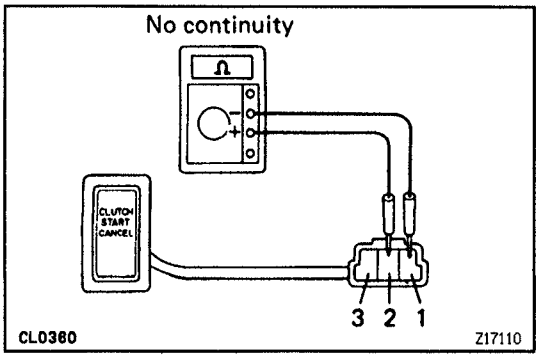

8. CHECK CONTINUITY OF CLUTCH START CANCEL SWITCH

(a) Check that there is no continuity when connecting the positive (+) lead from the ohmmeter to terminal 2 and the negative (−) lead to terminal 1.

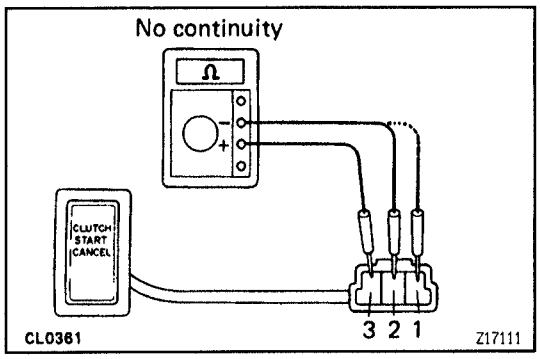

(b) Check that there is no continuity when connecting the positive (+) lead from the ohmmeter to terminal 3 and the negative (−) lead to terminal 1.

(c) Check the there is no continuity between terminals 2 and 3.

If continuity is not as specified, replace the clutch start cancel switch.

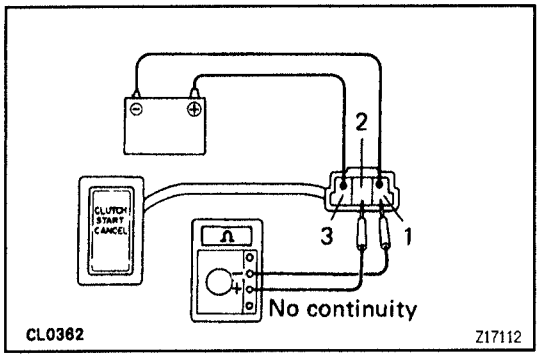

9. CHECK OPERATION OF CLUTCH START CANCEL SWITCH

(a) Connect positive (+) lead from the battery to terminal 3 and connect negative (−) lead to terminal 1.

(b) Check that there is no continuity when connecting the positive (+) lead from the ohmmeter to terminal 2 and the negative (−) lead to terminal 1.

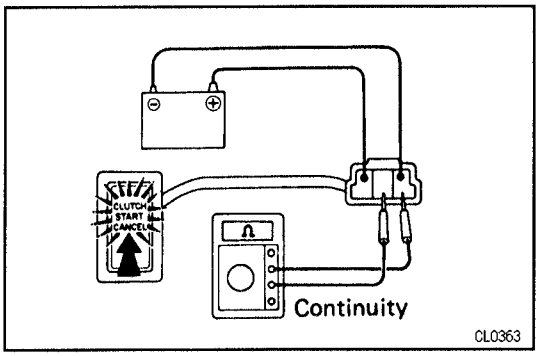

(c) When pushing the switch and check that the indicator light comes on and there is continuity between terminal 1 and 2.

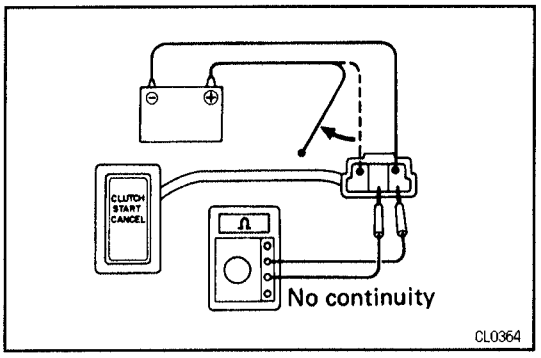

(d) Check that there is no continuity between terminals 1 and 2 when disconnect the battery lead.

If continuity is not as specified, replace the clutch start cancel switch.

CLUTCH MASTER CYLINDER

CL006-ON

COMPONENTS

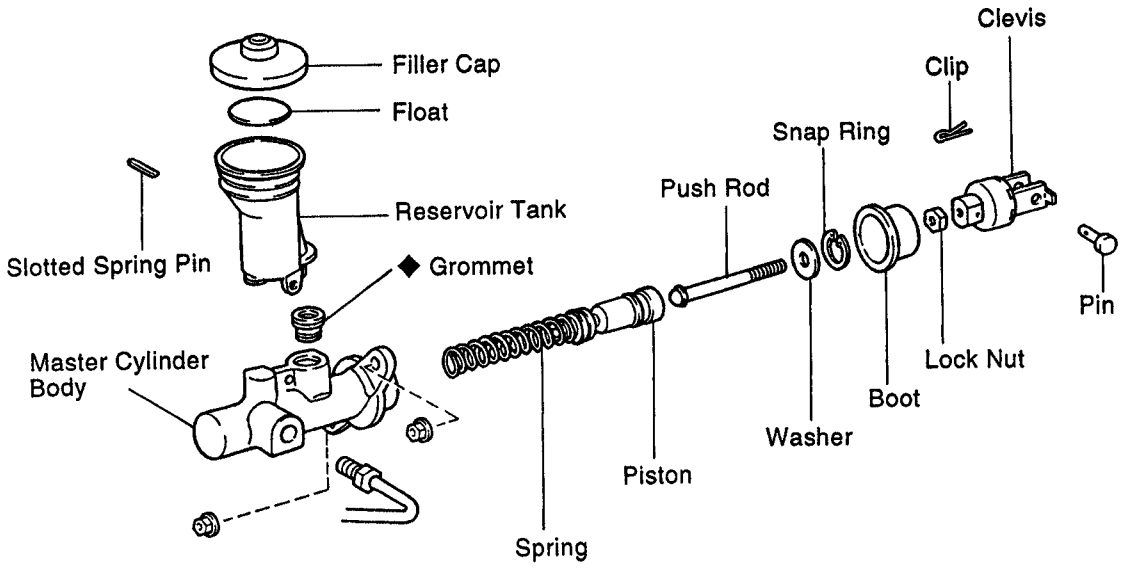

◆ Non-reusable part

Q06643

CL006-OP

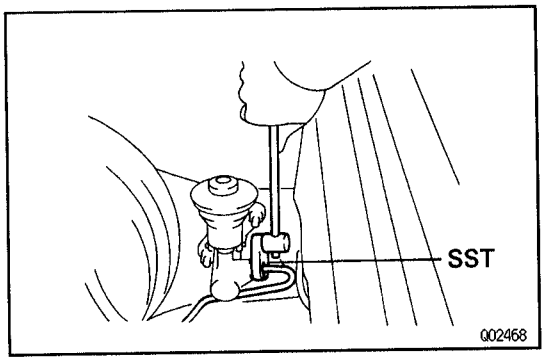

MASTER CYLINDER REMOVAL

1. **DRAW OUT FLUID WITH SYRINGE**
2. **DISCONNECT CLUTCH LINE**
   Using SST, disconnect the line. Use a container to catch the fluid.
   SST 09023–00100
   Torque: 15 N·m (155 kgf·cm, 11 ft·lbf)
3. **REMOVE CLIP AND CLEVIS PIN**
4. **REMOVE MOUNTING NUTS AND PULL OUT MASTER CYLINDER**
   Torque: 13 N·m (130 kgf·cm, 9 ft·lbf)

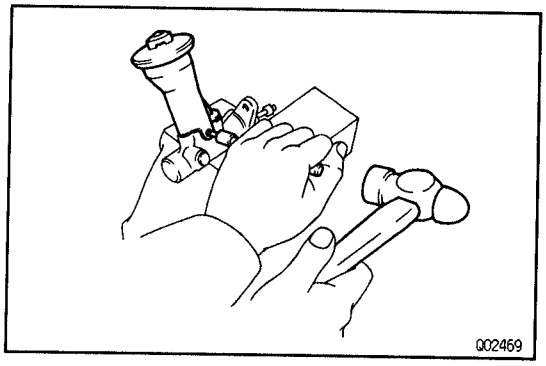

MASTER CYLINDER DISASSEMBLY

CL00A-0H

1. **REMOVE RESERVOIR TANK**
(a) Using a pin punch and hammer, drive out the slotted spring pin.
(b) Remove the reservoir tank and grommet.

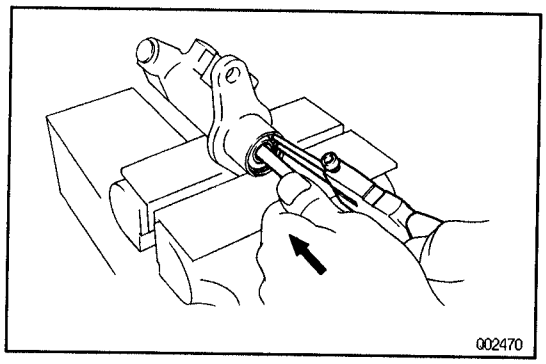

2. **REMOVE PUSH ROD**
Pull back the boot, and using snap ring pliers, remove the snap ring.
3. **REMOVE PISTON**

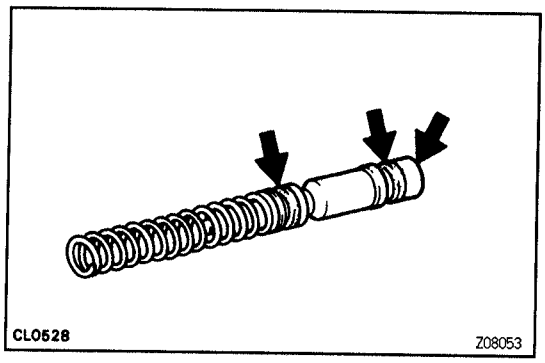

MASTER CYLINDER ASSEMBLY

CL00C-0H

1. **COAT PARTS WITH LITHIUM SOAP BASE GLYCOL GREASE, AS SHOWN**
2. **INSERT PISTON INTO CYLINDER**
3. **INSTALL PUSH ROD ASSEMBLY WITH SNAP RING**

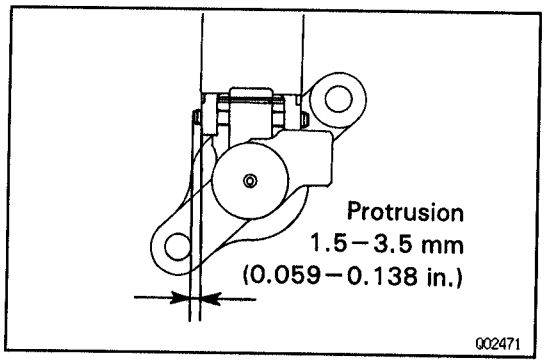

4. **INSTALL RESERVOIR TANK**
(a) Install the reservoir tank and a new grommet.
(b) Using a pin punch and hammer, drive in the slotted spring pin.

MASTER CYLINDER INSTALLATION

CL0CN-01

Installation is in the reverse order of removal.
HINT: After installation, bleed system and adjust clutch pedal.

CLUTCH RELEASE CYLINDER

CL00E–0V

COMPONENTS

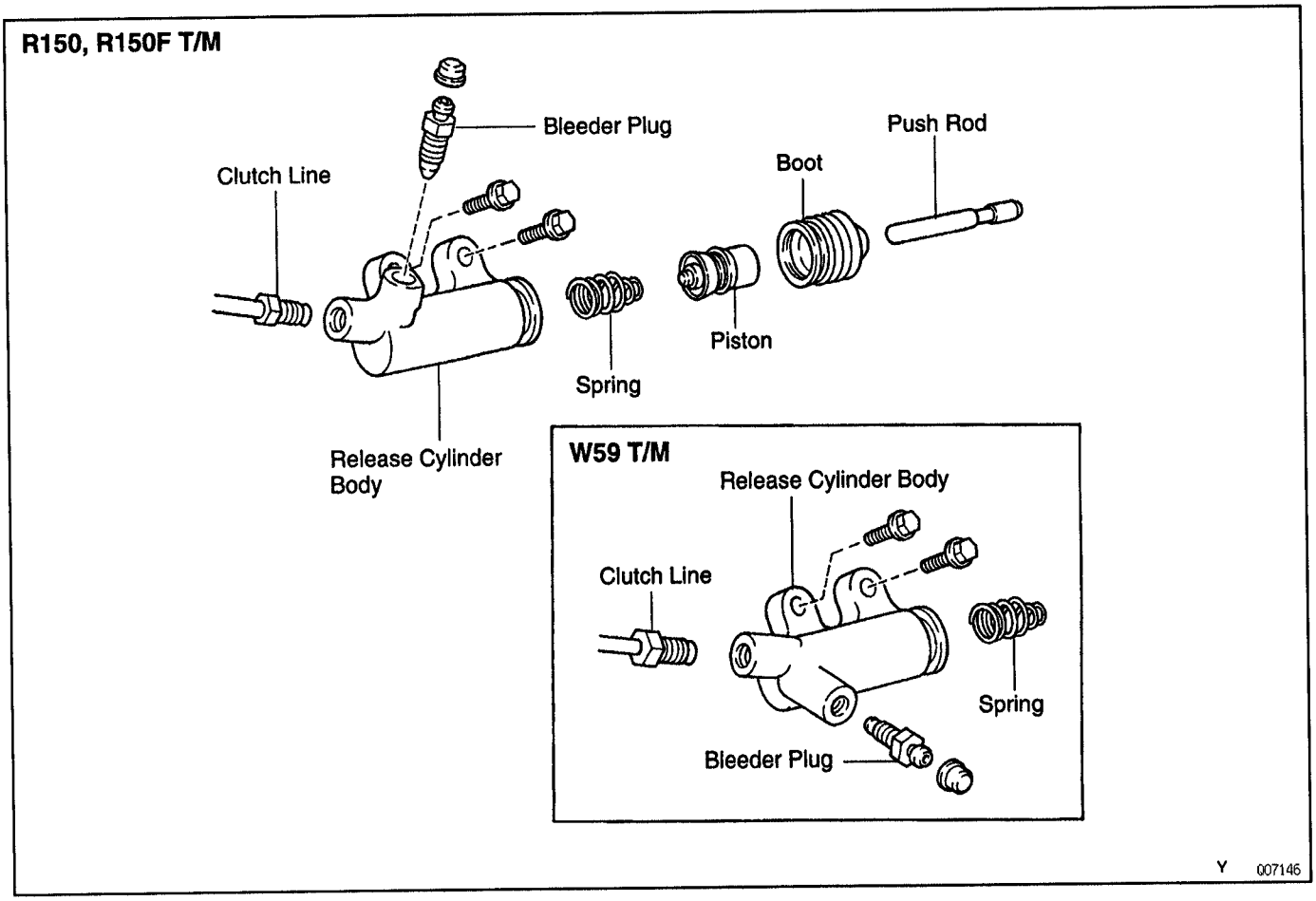

CL02W–07

RELEASE CYLINDER REMOVAL

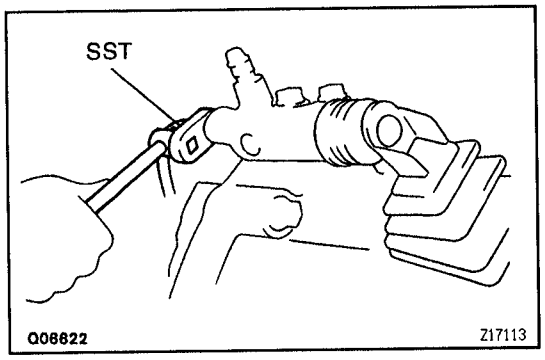

1. **DISCONNECT CLUTCH LINE**
   Using SST, disconnect the line. Use a container to catch the fluid.
   SST 09023–00100
   Torque: 15 N·m (155 kgf·cm, 11 ft·lbf)

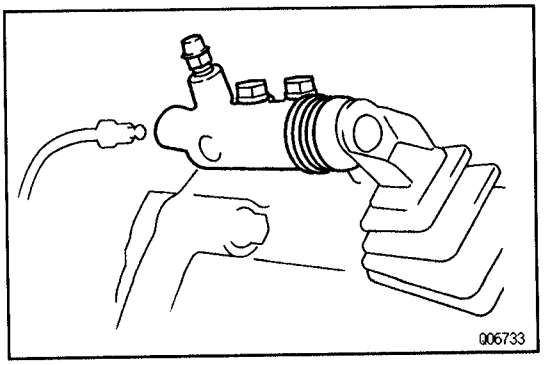

2. **REMOVE 2 BOLTS AND PULL OUT RELEASE CYLINDER**
   Torque: 13 N·m (130 kgf·cm, 9 ft·lbf)

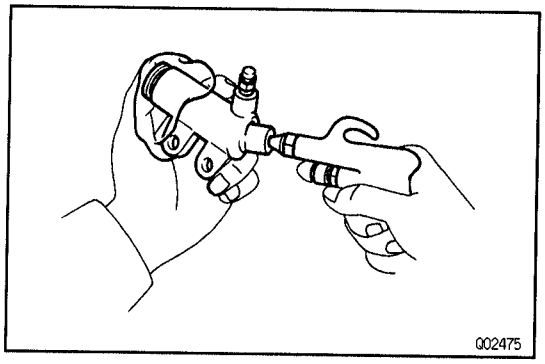

RELEASE CYLINDER DISASSEMBLY

CL00Q–0E

1. PULL OUT BOOT WITH PUSH ROD
2. REMOVE PISTON
   Using compressed air, remove the piston with the spring from the cylinder.

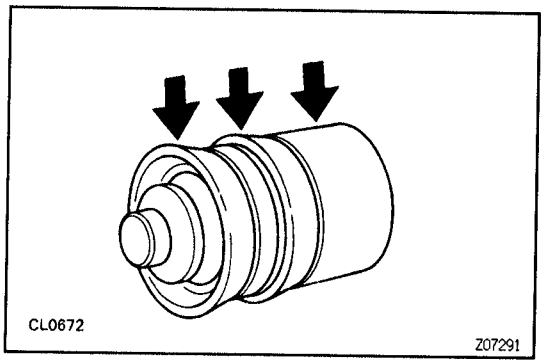

RELEASE CYLINDER ASSEMBLY

CL00H–0D

1. COAT PISTON WITH LITHIUM SOAP BASE GLYCOL GREASE, AS SHOWN
2. INSTALL PISTON WITH SPRING INTO CYLINDER
3. INSTALL BOOT WITH PUSH ROD TO CYLINDER

CL

RELEASE CYLINDER INSTALLATION

CL0CP–01

Installation is in the reverse order of removal.
HINT: After installation, bleed clutch system.

CLUTCH UNIT

COMPONENTS

CL00K–0R

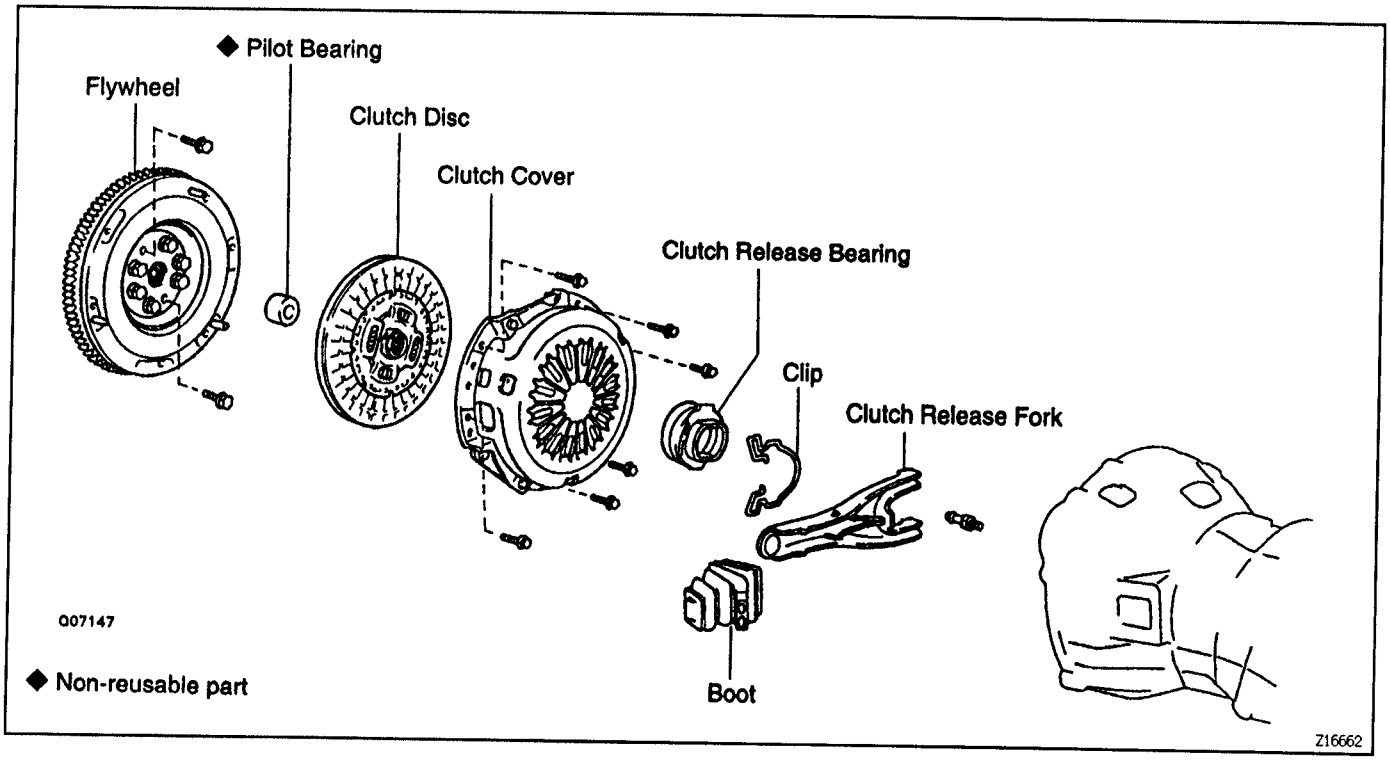

CL0AB-03

CLUTCH UNIT REMOVAL

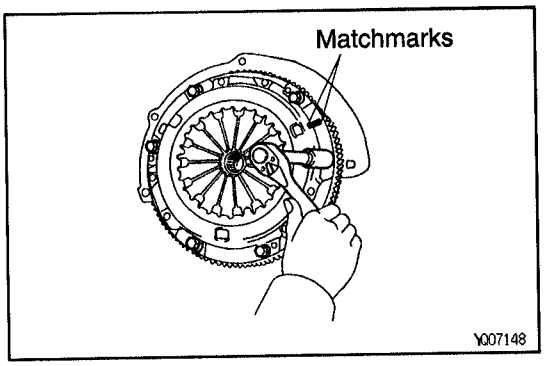

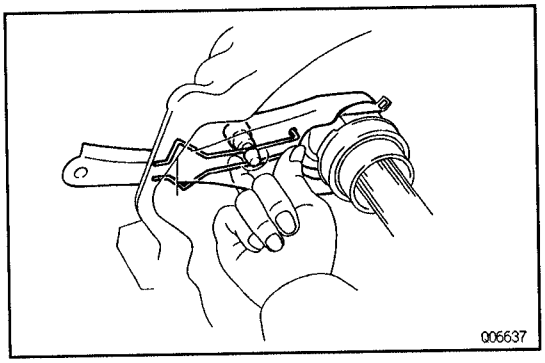

1. **REMOVE TRANSMISSION FROM ENGINE**
   W59 (2WD): See page MT–6
   W59 (4WD): See page MT–8
   R150: See page MT–6
   R150F: See page MT–8
2. **REMOVE CLUTCH COVER AND DISC**

(a) Place matchmarks on the flywheel and clutch cover.

(b) Loosen each set bolt one turn at a time until spring tension is released.

(c) Remove the set bolts, and pull off the clutch cover with the clutch disc.

NOTICE: Do not drop the clutch disc.

3. **REMOVE BOOT, RELEASE BEARING AND FORK FROM TRANSMISSION**

Remove the boot and release bearing together with the fork and then separate them.

CL

CL02X-06

CLUTCH PARTS INSPECTION

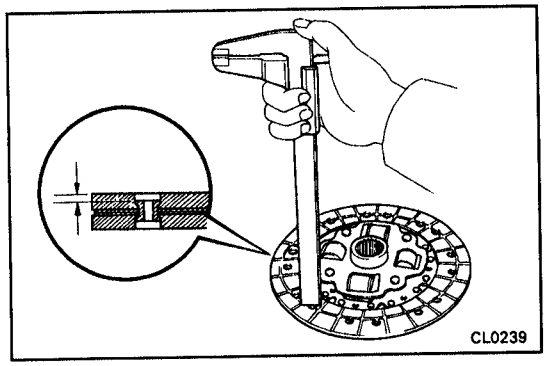

1. **INSPECT CLUTCH DISC FOR WEAR OR DAMAGE**

Using calipers, measure the rivet head depth.

Minimum rivet depth: 0.3 mm (0.012 in.)

If necessary, replace the clutch disc.

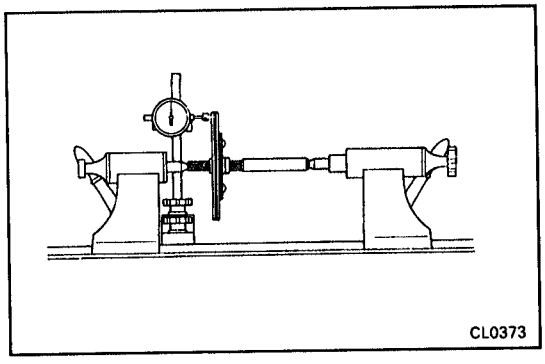

2. **INSPECT CLUTCH DISC RUNOUT**

Using a dial indicator, check the disc runout.

Maximum runout: 0.8 mm (0.031 in.)

If necessary, replace the clutch disc.

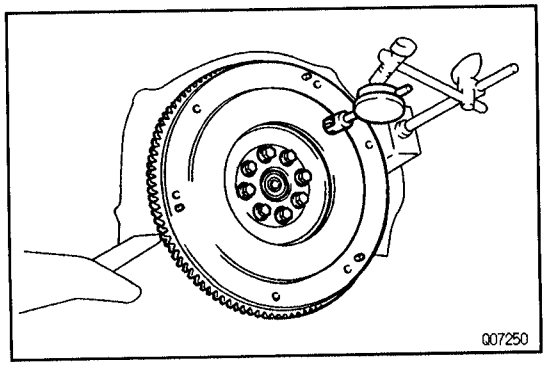

3. **INSPECT FLYWHEEL RUNOUT**

Using a dial indicator, check the flywheel runout.

Maximum runout: 0.1 mm (0.004 in.)

If necessary, replace the flywheel.

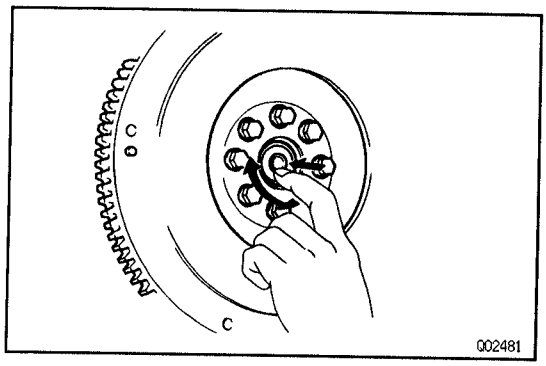

4. INSPECT PILOT BEARING

Turn the bearing by hand while applying force in the rotation direction.

If the bearing sticks or has much resistance, replace the pilot bearing.

HINT: The bearing is permanently lubricated and requires no clearing or lubrication.

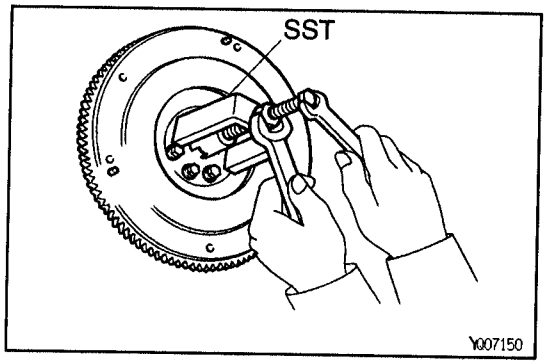

5. IF NECESSARY, REPLACE PILOT BEARING

(a) Remove the 2 bolts at diametrically opposite points.

(b) Using SST, remove the pilot bearing.
SST 09303–35011

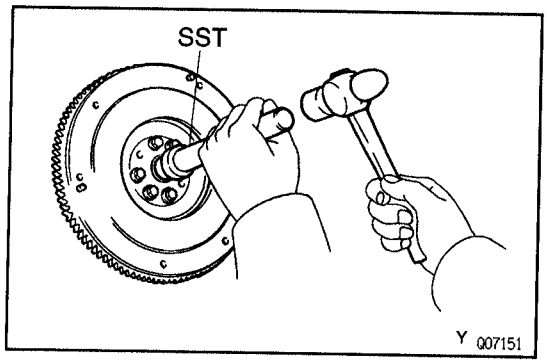

(c) Using SST and hammer, install the pilot bearing.
SST 09304–30012
HINT: After assembling the pilot bearing to the hub, install sure that it rotates smoothly.

(d) Install 2 new bolts.
Torque:
2RZ–FE Engine: 88 N·m (900 kgf·cm, 65 ft·lbf)
3RZ–FE Engine: 26.5 N·m (270 kgf·cm, 19 ft·lbf)
5VZ–FE Engine: 85 N·m (850 kgf·cm, 63 ft·lbf)

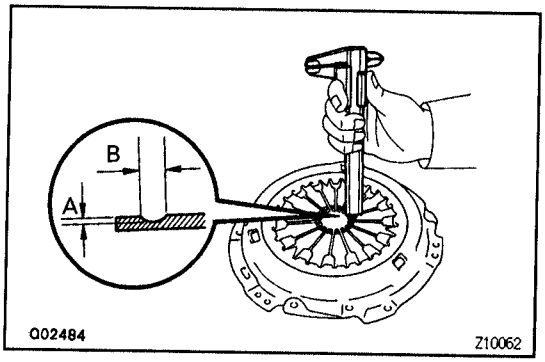

6. INSPECT DIAPHRAGM SPRING FOR WEAR

Using calipers, measure the diaphragm spring for depth and width of wear.
Maximum depth: A: 0.6 mm (0.024 in.)
Maximum width: B: 5.0 mm (0.197 in.)
If necessary, replace the clutch cover.

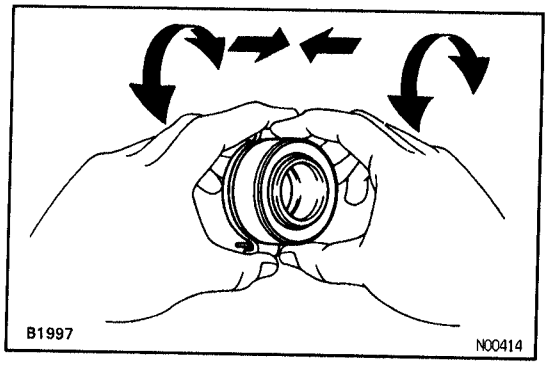

7. INSPECT RELEASE BEARING

Turn the bearing by hand while applying force in the axial direction.

HINT: The bearing is permanently lubricated and requires no cleaning or lubrication.

If necessary, replace the release bearing.

CL0D4-01

CLUTCH UNIT INSTALLATION

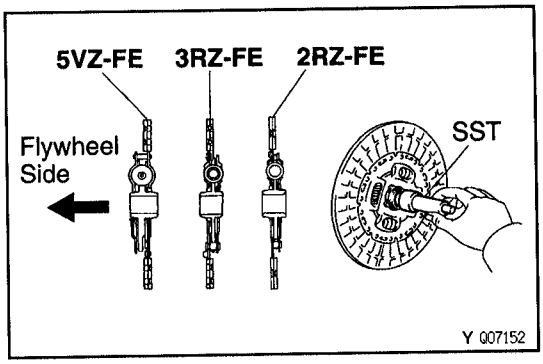

1. INSTALL CLUTCH DISC AND CLUTCH COVER ON FLYWHEEL

(a) Insert the SST in the clutch disc, and then set them.
SST 09301–00110

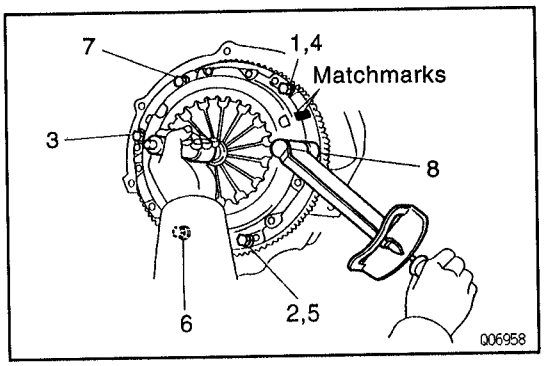

(b) Align the matchmarks on the clutch cover and flywheel.

(c) Torque the 6 bolts on the clutch cover in the order shown.
Torque: 19 N·m (195 kgf·cm, 14 ft·lbf)
HINT: Temporarily tighten the No.1 and No.2 bolts.

CL

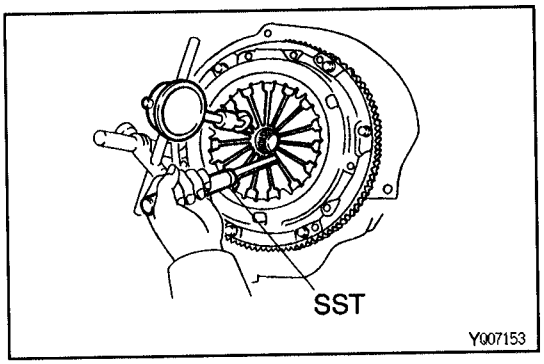

2. CHECK DIAPHRAGM SPRING TIP ALIGNMENT

Using a dial indicator with roller instrument, check the diaphragm spring tip alignment.
Maximum non–alignment: 0.5 mm (0.020 in.)
If alignment is not as specified, using SST, adjust the diaphragm spring tip alignment.
SST 09333–00013

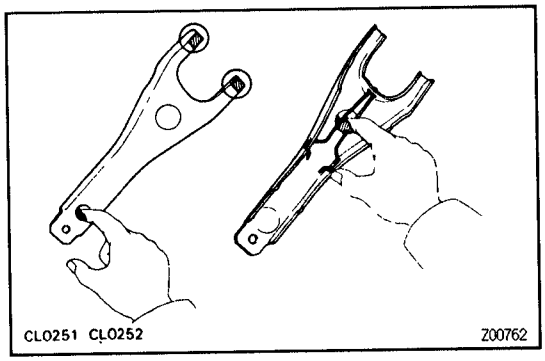

3. APPLY MOLYBDENUM DISULPHIDE LITHIUM BASE GREASE (NLGI NO.2)

(a) Apply release hub grease to the these parts.
- Release fork and hub contact point
- Release fork and push rod contact point
- Release fork pivot point

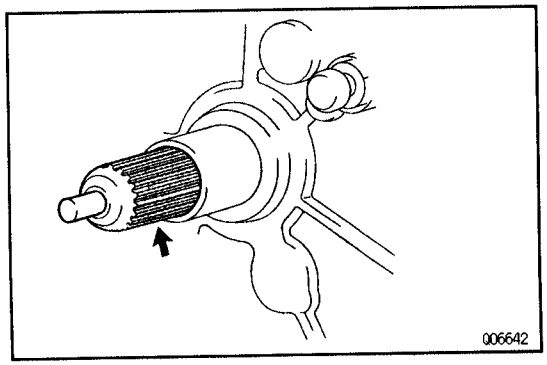

(b) Apply clutch spline grease.
- Clutch disc spline

HINT: Recommended grease part number 08887–01706 (100 g).

4. INSTALL BOOT, RELEASE BEARING AND FORK TO TRANSMISSION

Install the boot and bearing to the release fork, and then install them to the transmission.transmission.

5. **INSTALL TRANSMISSION TO ENGINE**
W59 (2WD): See page MT–6
W59 (4WD): See page MT–8
R150: See page MT–6
R150F: See page MT–8

SERVICE SPECIFICATIONS

SERVICE DATA

CL00P–0U

Pedal height from floor panel		175.0–185.0 mm (6.889–7.283 in.)
Pedal height from asphalt sheet		172.0–182.0 mm (6.772–7.165 in.)
Pedal freeplay		5.0–15.0 mm (0.197–0.591 in.)
Push rod play at pedal top		1.0–5.0 mm (0.039–0.197 in.)
Clutch release point from pedal full stroke end position		25 mm (0.98 in.) or more
Clutch start switch	ON–OFF Stroke	8±0.5 mm (0.31±0.020 in.)
Slotted spring pin protrusion		1.5–3.5 mm (0.059–0.138 in.)
Disc rivet head depth	Min.	0.3 mm (0.012 in.)
Disc runout	Max.	0.8 mm (0.031 in.)
Flywheel runout	Max.	0.1 mm (0.004 in.)
Diaphragm spring finger wear	Max. depth	0.6 mm (0.024 in.)
Diaphragm spring finger wear	Max. width	5.0 mm (0.197 in.)
Diaphragm spring tip non–alignment	Max.	0.5 mm (0.020 in.)

TORQUE SPECIFICATIONS

CL00Q–0X

Part tightened		N·m	kgf·cm	ft·lbf
Clutch line union		15	155	11
Master cylinder installation nut		13	130	9
Bleeder plug		11	110	8
Release cylinder installation bolt		13	130	9
Clutch cover x Flywheel		19	195	14
Release fork support	2RZ–FE, 3RZ–FE	39	400	29
	5VZ–FE	47	480	35
Flywheel set bolt	2RZ–FE	88	900	65
	3RZ–FE	26.5	270	19
	5VZ–FE	85	850	63

W59 MANUAL TRANSMISSION

PRECAUTION ..... MT– 2
PREPARATION ..... MT– 2
TROUBLESHOOTING ..... MT– 5
ASSEMBLY REMOVAL AND INSTALLATION ..... MT– 6
(2RZ–FE, 2WD) ..... MT– 6
ASSEMBLY REMOVAL AND INSTALLATION ..... MT– 8
(3RZ–FE, 4WD) ..... MT– 8
COMPONENT PARTS REMOVAL ..... MT– 11
INPUT SHAFT ..... MT– 21
OUTPUT SHAFT ..... MT– 23
COUNTER GEAR AND REVERSE IDLER GEAR ..... MT– 30
FRONT BEARING RETAINER ..... MT– 35
EXTENSION HOUSING AND TRANSFER ADAPTOR ..... MT– 36
SERVICE SPECIFICATIONS ..... MT– 38

PRECAUTION

MX022–0U

When working with FIPG material, you must observe the following.

- **Using a razor blade and gasket scraper, remove all the old FIPG material from the gasket surfaces.**
- **Thoroughly clean all components to remove all the loose material.**
- **Clean both sealing surfaces with a non–residue solvent.**
- **Apply the FIPG in an approx. 1 mm (0.04 in.) wide bead along the sealing surface.**
- **Parts must be assembled within 10 minutes of application. Otherwise, the FIPG material must be removed and reapplied.**

PREPARATION

SST (SPECIAL SERVICE TOOLS)

MT004–0D

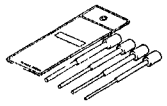	09201–10000	Valve Guide Bushing Remover & Replacer Set	Speedometer driven gear oil seal
	(09201–01080)	Valve Guide Bushing Remover & Replacer 8	
	09308–00010	Oil Seal Puller	Output shaft rear bearing outer race
	09308–10010	Oil Seal Puller	Extension housing oil seal
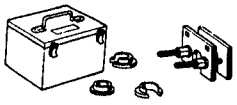	09312–20011	Transmission Gear Remover & Replacer	5th gear Output shaft rear bearing Reverse gear
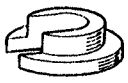	(09313–00010)	Reverse Gear Remover	
	(09313–00030)	Rear Bearing Replacer	
	(09313–00040)	Plate "A"	
	(09313–00050)	Plate "B"	
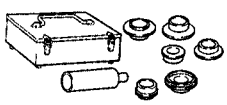	09316–60011	Transmission & Transfer Bearing Replacer	No.3 clutch hub Counter gear center bearing outer race

MT

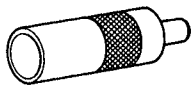	(09316–00011) Replacer Pipe	
	(09316–00071) Replacer "F"	
	09506–35010 Differential Drive Pinion Rear Bearing Replacer	Input shaft bearing Output shaft center bearing
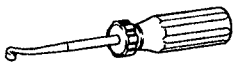	09921–00010 Spring Tension Tool	Speedometer driven gear oil seal
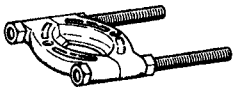	09950–00020 Bearing Remover	
	09950–40010 Puller B Set	Counter 5th gear No.3 clutch hub Reverse gear Counter gear side race
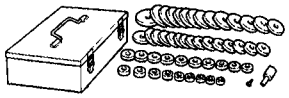	09950–60010 Replacer Set	
	(09951–00440) Replacer 44	Front bearing retainer oil seal
	(09951–00510) Replacer 51	Counter gear center bearing outer race
	(09951–00560) Replacer 56	Output shaft rear bearing outer race Extension housing oil seal Transfer adaptor oil seal
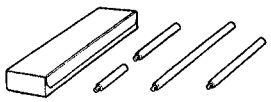	09950–70010 Handle Set	
	(09951–07150) Handle 150	

MT005–0A

RECOMMENDED TOOLS

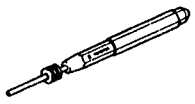	09031–00030 Pin Punch .	

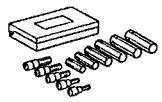	09040–00010 Hexagon Wrench Set .	
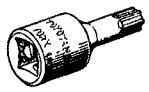	09042–00020 Torx Socket T40 .	
	09905–00012 Snap Ring No.1 Expander .	

EQUIPMENT

MT006–05

Dial indicator	
Calipers	
Micrometer	
Torque wrench	
Feeler gauge	
Magnetic finger	

MT

LUBRICANT

MT007–0C

Item		Capacity	Classification
Manual transmission oil	2WD:	2.6 liters (2.7 US qts, 2.3 Imp. qts)	API GL–4 or GL–5
	4WD:	2.5 liters (2.6 US qts, 2.2 Imp. qts)	SAE 75W–90

SSM (SPECIAL SERVICE MATERIALS)

MT008–09

08826–00090	Seal Packing 1281, THREE BOND 1281 or equivalent (FIPG)	Transmission case x Intermediate plate Front bearing retainer x Transmission case
08833–00080	Adhesive 1344, THREE BOND 1344, LOCTITE 242 or equivalent	Straight screw plug Front bearing retainer bolt Control shift lever retainer set bolt

TROUBLESHOOTING

MT009-08

Use the table below to help you find the cause of the problem. The numbers indicate the priority of the likely cause of the problem. Check each part in order. If necessary, replace these parts.

Trouble \ Parts Name	Oil (Level low)	Oil (Wrong)	Oil (Level too high)	Gasket (Damaged)	Oil seal (Worn or damaged)	O-Ring (Worn or damaged)	Locking ball spring (Damaged)	Shift fork (Worn)	Gear (Worn or damaged)	Bearing (Worn or damaged)	Synchronizer ring (Worn or damaged)	Shifting key spring (Damaged)				
See page	–	MT-4	–	MT-11	MT-11	MT-11	MT-11	MT-11	MT-11	MT-11	MT-21, 23 30	MT-23, 30				
Noise	1	2							3	3						
Oil leakage			1	2	2	3										
Hard to shift or will not shift											1	2				
Jumps out of gear							1	2	3	3						

MT

V00794

ASSEMBLY REMOVAL AND INSTALLATION (2RZ–FE, 2WD)

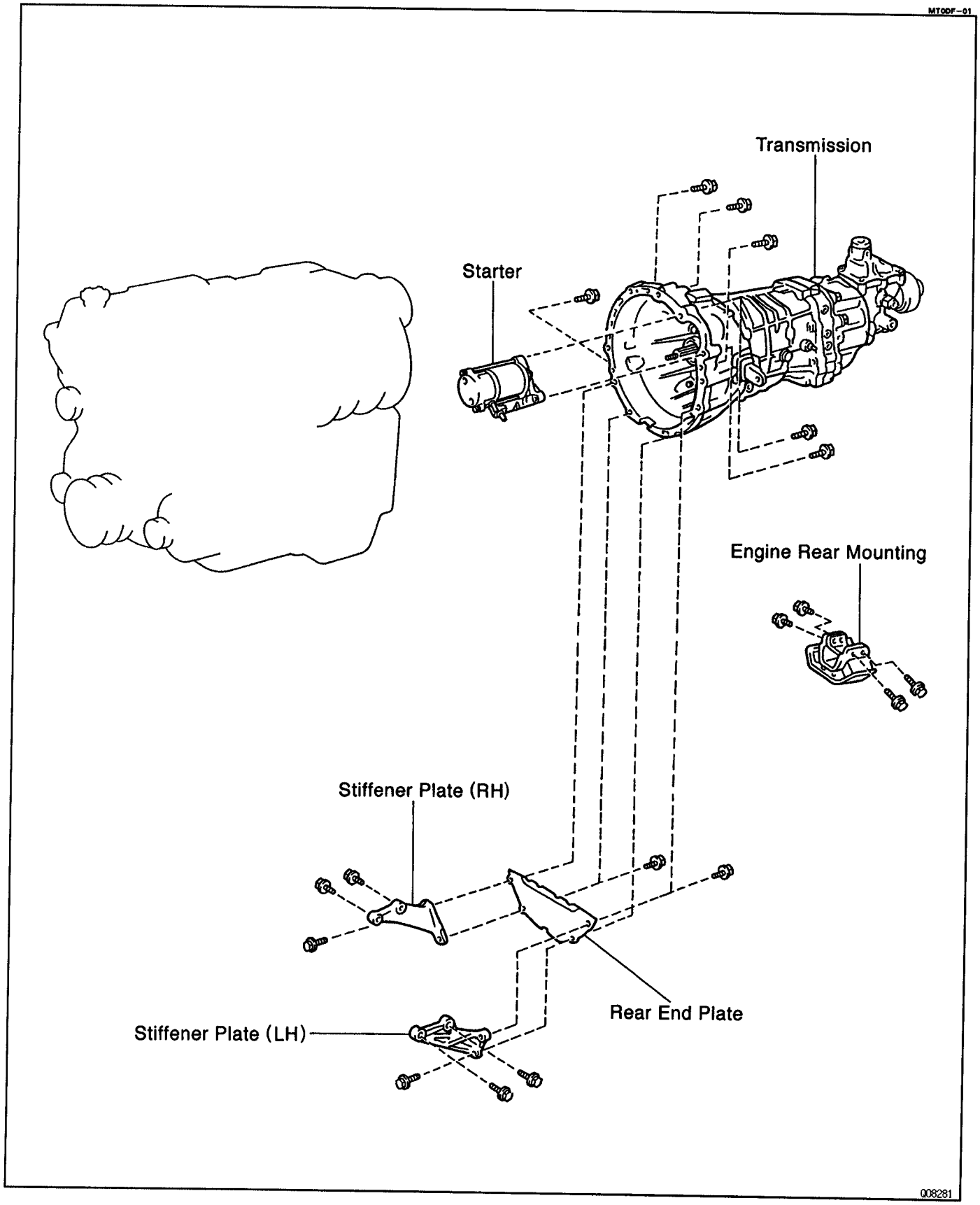

MT0BS–02

TRANSMISSION REMOVAL

1. **REMOVE TRANSMISSION WITH ENGINE**
   (See page EG–61)
2. **REMOVE REAR END PLATE**
   Remove the 8 bolts, 2 stiffener plates and plate.
   Torque: 37 N·m (380 kgf·cm, 27 ft·lbf)
3. **REMOVE STARTER**
   Remove the 2 bolts and starter.
   Torque: 39 N·m (400 kgf·cm, 29 ft·lbf)

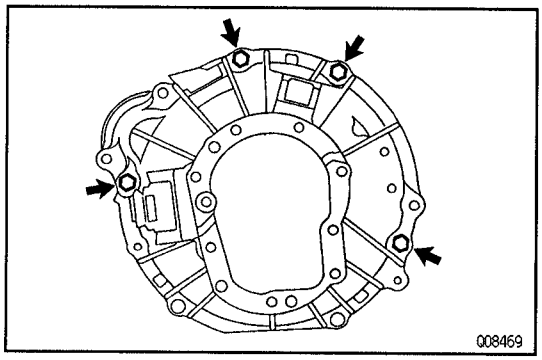
Q08469

4. **REMOVE TRANSMISSION FROM ENGINE**

(a) Remove the 4 transmission mounting bolts from the engine.
Torque: 72 N·m (730 kgf·cm, 53 ft·lbf)

(b) Pull out the transmission toward the rear.

5. **REMOVE ENGINE REAR MOUNTING**
   Remove the 4 bolts and engine rear mounting.
   Torque: 65 N·m (660 kgf·cm, 48 ft·lbf)

MT

MT0DG–01

TRANSMISSION INSTALLATION

Installation is in the reverse order of removal.
HINT: After installation, road test the vehicle.

ASSEMBLY REMOVAL AND INSTALLATION (3RZ–FE, 4WD)

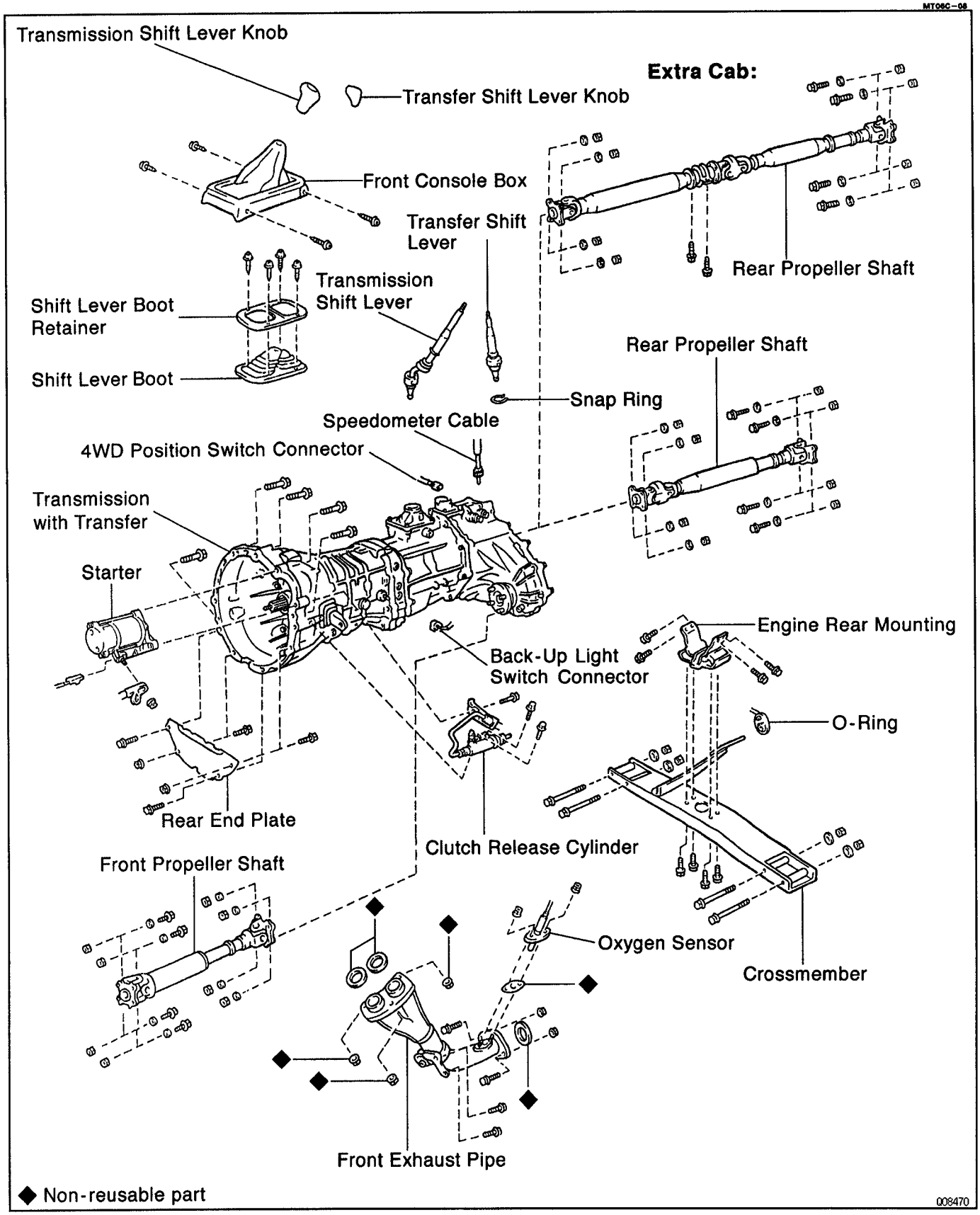

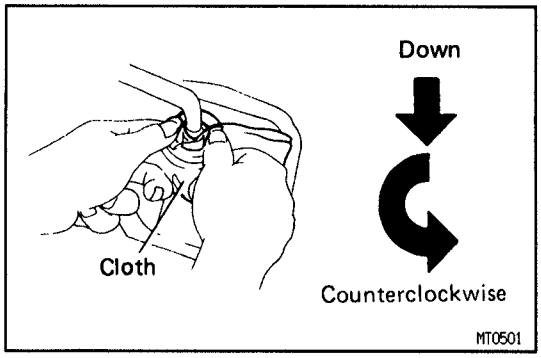

MT08T–02

TRANSMISSION REMOVAL

1. REMOVE TRANSMISSION SHIFT LEVER

(a) Remove the 4 screws and front console box.

(b) Remove the 4 screws and shift lever boot and retainer.

(c) Cover the shift lever cap with a cloth.

(d) Pressing down on the shift lever cap and rotate it counterclockwise to remove.

(e) Pull out the shift lever.

INSTALLATION HINT: Apply MP grease to the tip of shift lever.

MT

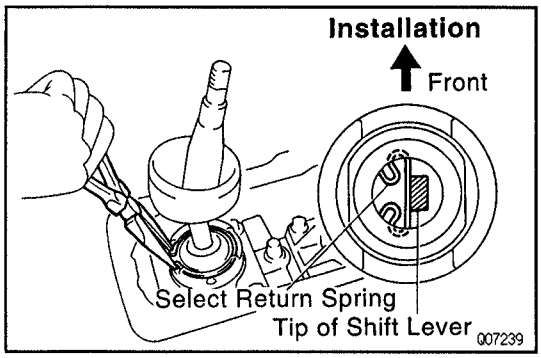

2. REMOVE TRANSFER SHIFT LEVER

Using pliers, remove the snap ring and pull out the shift lever.

INSTALLATION HINT: Apply MP grease to the tip of shift lever.

3. RAISE VEHICLE AND DRAIN TRANSMISSION OIL

Oil grade: API GL–4 or GL–5
Viscosity: SAE 75W–90
Capacity: 2.5 liters (2.6 US qts, 2.2 Imp. qts)

4. DISCONNECT FRONT PROPELLER SHAFT

(See page PR–6)

5. DISCONNECT REAR PROPELLER SHAFT

(See page PR–6)

6. DISCONNECT SPEEDOMETER CABLE

7. DISCONNECT BACK–UP LIGHT SWITCH AND 4WD POSITION SWITCH CONNECTOR

8. REMOVE CLUTCH RELEASE CYLINDER

Remove the 2 bolts and release cylinder.

Torque: 12 N·m (120 kgf·cm, 9 ft·lbf)

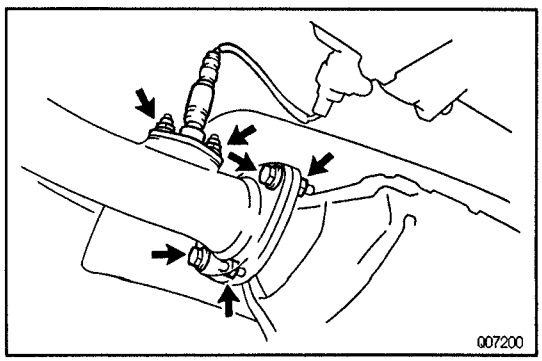

9. REMOVE STARTER'S SET BOLT

(a) Disconnect the connector and wire from the starter.

(b) Remove the bolt of starter lower side with the clutch line bracket.

Torque: 39 N·m (400 kgf·cm, 29 ft·lbf)

10. REMOVE FRONT EXHAUST PIPE

(a) Remove the 2 nuts, gasket and oxygen sensor.

(b) Remove the 2 bolts, nuts and gasket.

Torque: 48 N·m (490 kgf·cm, 35 ft·lbf)

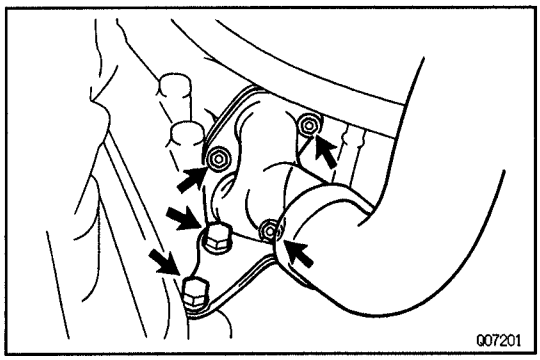

(c) Remove the front exhaust pipe bracket 2 set bolts.
Torque: 71 N·m (720 kgf·cm, 52 ft·lbf)

(d) Remove the 3 nuts, front exhaust pipe and 2 gaskets.
Torque: 62 N·m (630 kgf·cm, 46 ft·lbf)

11. REMOVE REAR END PLATE

Remove the 4 bolts, 2 nuts and rear end plate.
Torque: 37 N·m (380 kgf·cm, 27 ft·lbf)

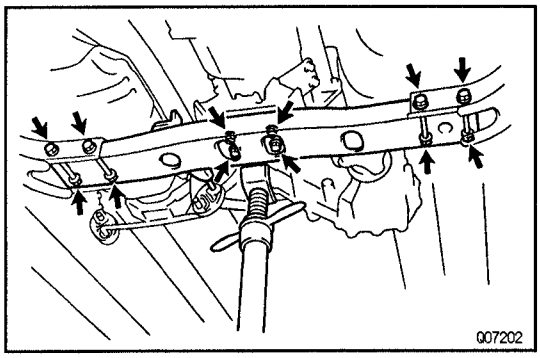

12. REMOVE CROSSMEMBER

(a) Support the transmission rear side.

(b) Remove the 4 bolts from the engine rear mounting.
Torque: 19 N·m (190 kgf·cm, 14 ft·lbf)

(c) Disconnect the O–ring and remove the 4 bolts, nuts and crossmember.
Torque: 65 N·m (660 kgf·cm, 48 ft·lbf)

13. REMOVE ENGINE REAR MOUNTING

Remove the 4 bolts and engine rear mounting.
Torque: 65 N·m (660 kgf·cm, 48 ft·lbf)

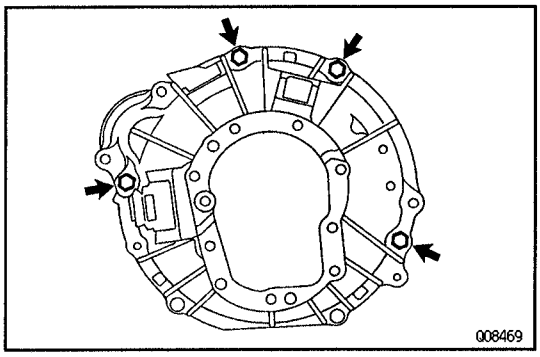

14. JACK UP TRANSMISSION SLIGHTLY

Using a transmission jack, support the transmission.

15. REMOVE STARTER

Remove the bolt of starter upper side and starter.
Torque: 39 N·m (400 kgf·cm, 29 ft·lbf)

16. REMOVE TRANSMISSION

(a) Remove the 4 transmission mounting bolts from the engine.
Torque: 72 N·m (730 kgf·cm, 53 ft·lbf)

(b) Pull out the transmission down and toward the rear.

17. REMOVE TRANSFER FROM TRANSMISSION

(a) Remove the transfer adaptor rear mounting bolts.
Torque: 24 N·m (240 kgf·cm, 17 ft·lbf)

(b) Pull the transfer straight up and remove it from the transmission.
HINT: Take care not to damage the adaptor rear oil seal with the transfer input gear spline.
INSTALLATION HINT:
(See page TR–6)

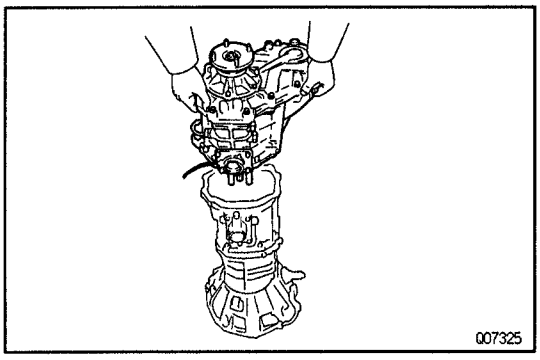

TRANSMISSION INSTALLATION

MT0DH–01

Installation is in the reverse order of removal.
HINT: After installation, road test the vehicle.

COMPONENT PARTS REMOVAL

MT00D–0G

COMPONENTS

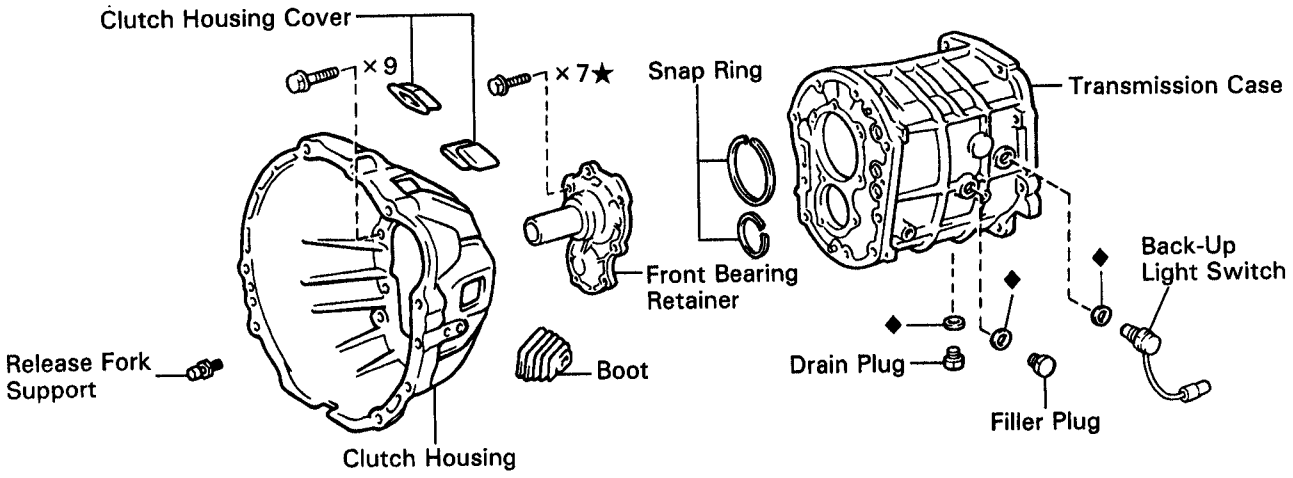

Q04904

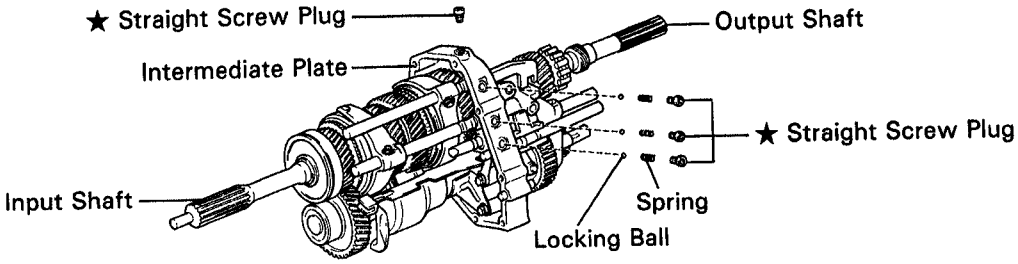

Q04012

2WD:

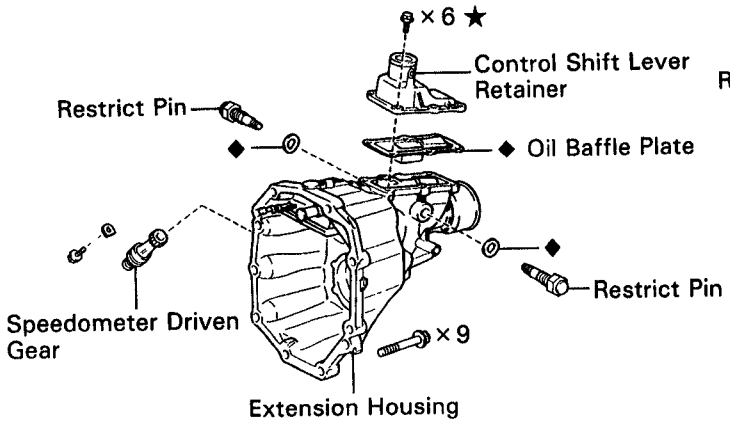

Q07392

4WD:

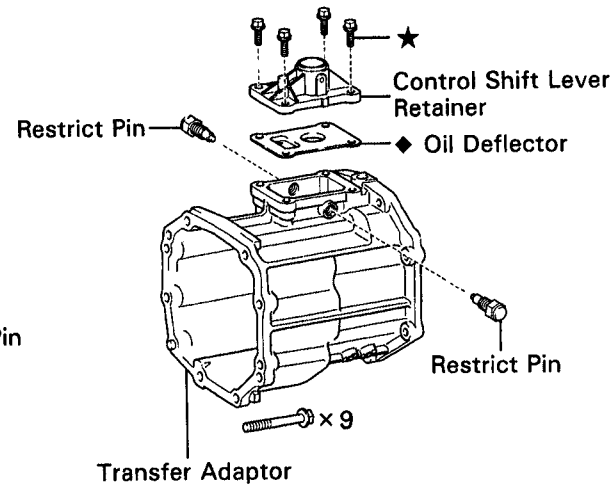

Q07257

◆ Non-reusable part
★ Precoated part

Z15446

MT

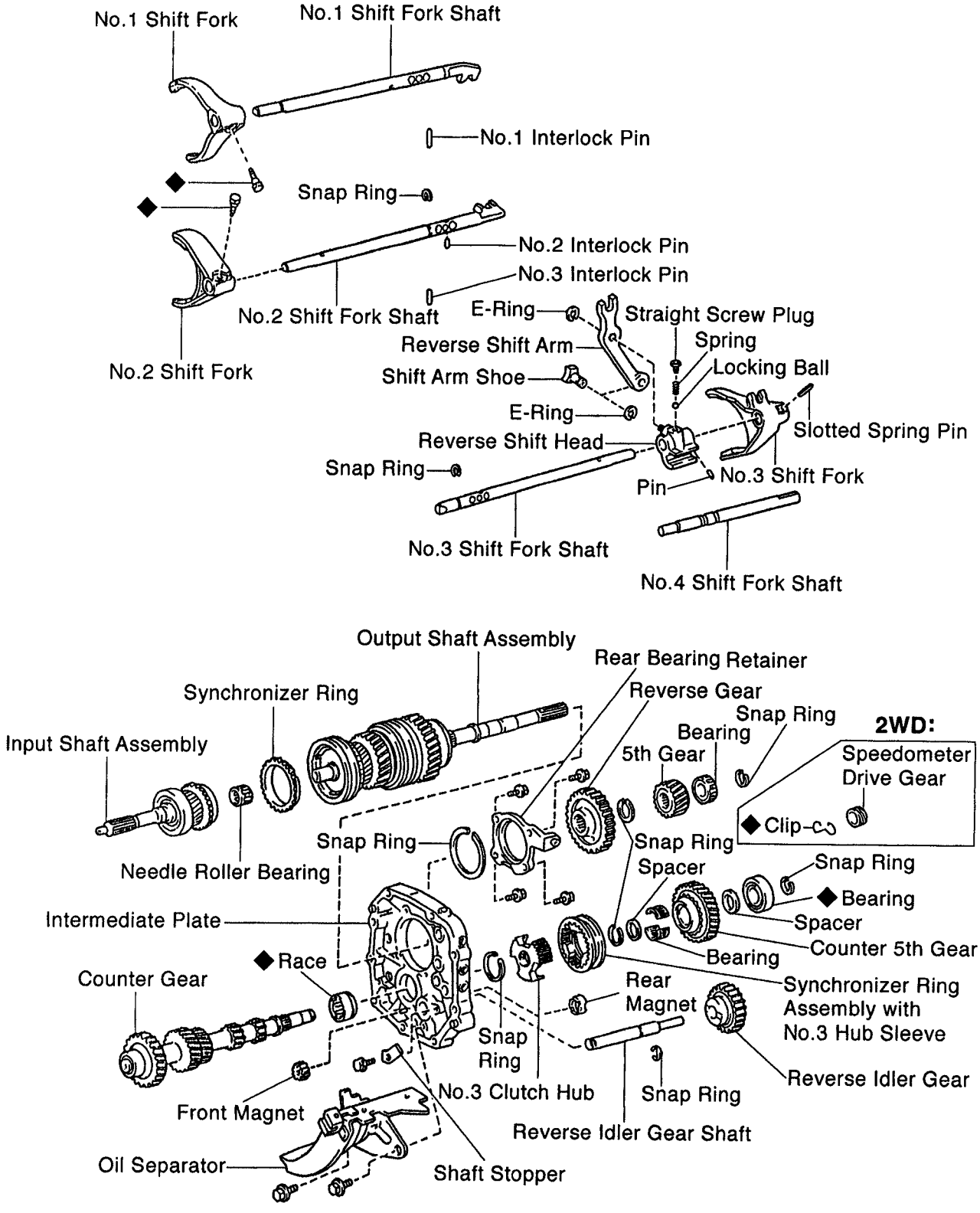

◆ Non-reusable part

008472

MT0DJ–01

BASIC SUBASSEMBLY SEPARATION

1. **REMOVE BACK–UP LIGHT SWITCH**
   Torque: 40 N·m (410 kgf·cm, 30 ft·lbf)
2. **2WD:**
   REMOVE SPEEDOMETER DRIVEN GEAR
   Remove the lock plate set bolt and driven gear.
   Torque: 13 N·m (130 kgf·cm, 9 ft·lbf)
3. **REMOVE CLUTCH HOUSING**
   Remove the 9 bolts and clutch housing.
   Torque: 37 N·m (380 kgf·cm, 27 ft·lbf)
4. **REMOVE CONTROL SHIFT LEVER RETAINER**
   (a) Remove the 6 (2WD) or 4 (4WD) bolts.
   Sealant: Part No. 08833 – 00080, THREE BOND 1344, LOCTITE 242 or equivalent
   Torque: 18 N·m (185 kgf·cm, 13 ft·lbf)
   (b) Remove the retainer and oil baffle plate (2WD) or oil deflector (4WD).
5. **2WD:**
   REMOVE 2 RESTRICT PINS AND GASKETS
   INSTALLATION HINT: Install the black pin on the reverse gear/5th gear side.
   Torque: 40 N·m (410 kgf·cm, 30 ft·lbf)
6. **4WD:**
   REMOVE 2 RESTRICT PINS
   INSTALLATION HINT: Install the black pin on the reverse gear/5th gear side.
   Torque: 27 N·m (280 kgf·cm, 20 ft·lbf)
7. **2WD:**
   REMOVE EXTENSION HOUSING
   (a) Remove the shift lever housing set bolt.
   Torque: 39 N·m (400 kgf·cm, 29 ft·lbf)
   (b) Remove the 9 bolts from the extension housing.
   Torque: 37 N·m (380 kgf·cm, 27 ft·lbf)
   (c) Using a plastic hammer, carefully tap the housing.
   (d) Disengage the shift and select lever from the shift head.
   (e) Pull out the extension housing.
   FIPG: Part No.08826–00090, THREE BOND 1281 or equivalent

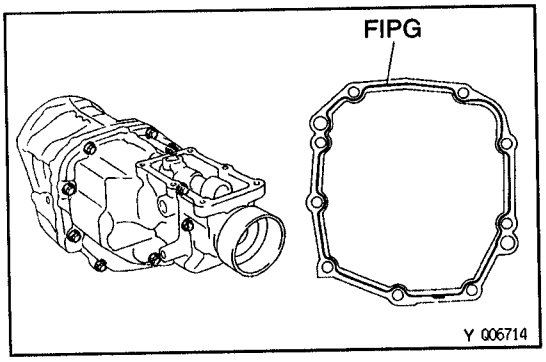

8. **4WD:**
   REMOVE TRANSFER ADAPTOR
   (a) Remove the shift lever housing set bolt.
   Torque: 39 N·m (400 kgf·cm, 29 ft·lbf)
   (b) Remove the 9 bolts from the transfer adaptor.
   Torque: 37 N·m (380 kgf·cm, 27 ft·lbf)
   (c) Using a plastic hammer, carefully tap the adaptor.
   (d) Disengage the shift and select lever from the shift head.

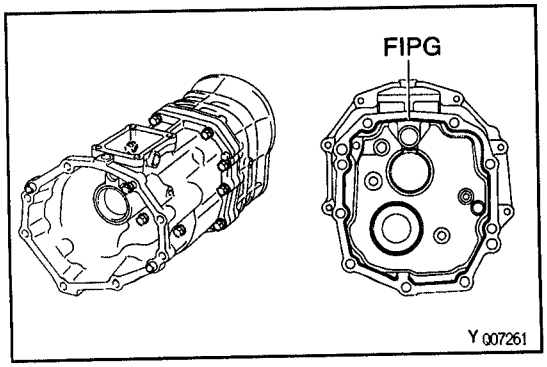

MT

(e) Pull out the transfer adaptor.
FIPG: Part No.08826–00090, THREE BOND 1281 or equivalent

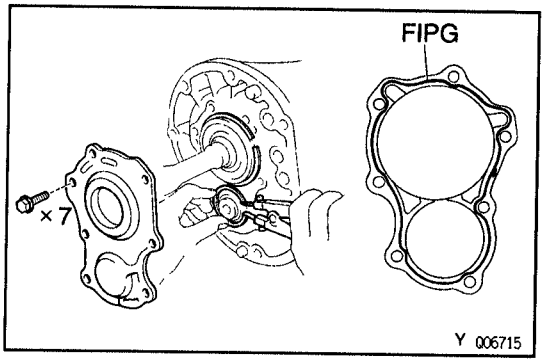

MT

9. REMOVE FRONT BEARING RETAINER AND BEARING SNAP RING

(a) Remove the 7 bolts.
Sealant: Part No.08833–00080, THREE BOND 1344, LOCTITE 242 or equivalent
Torque: 25 N·m (250 kgf·cm, 18 ft·lbf)

(b) Remove the front bearing retainer.
FIPG: Part No.08826–00090, THREE BOND 1281 or equivalent

(c) Using a snap ring expander, remove the 2 snap rings.

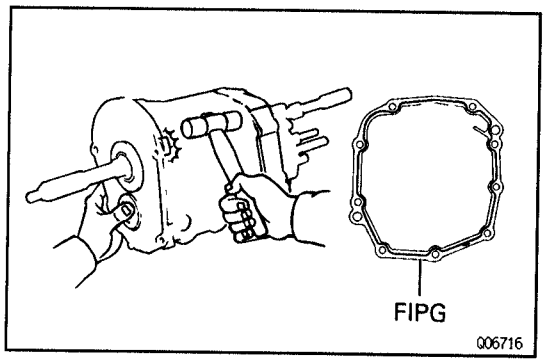

10. SEPARATE INTERMEDIATE PLATE FROM TRANSMISSION CASE

(a) Using a plastic hammer, carefully tap the transmission case.

(b) Pull the transmission case from the intermediate plate.
INSTALLATION HINT: Align each bearing outer race and each shift fork shaft end with the case holes.
FIPG: Part No.08826–00090, THREE BOND 1281 or equivalent

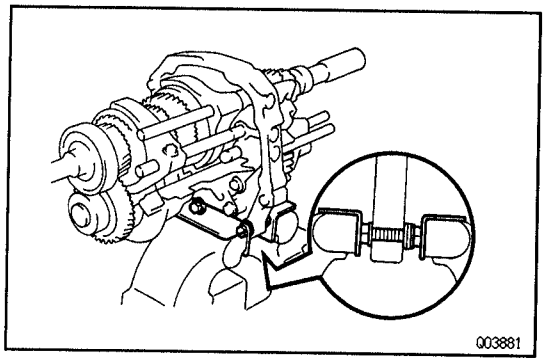

11. MOUNT INTERMEDIATE PLATE IN VISE

(a) Use the 2 long clutch housing bolts, plate washers and suitable nuts, as shown.
REMOVAL NOTICE: Increase or decrease plate washers so that the bolt tip does not protrude from the nut.

(b) Mount the intermediate plate in a vise.

12. REMOVE OIL SEPARATOR

Remove the 2 bolts and oil separator.
Torque: 18 N·m (185 kgf·cm, 13 ft·lbf)

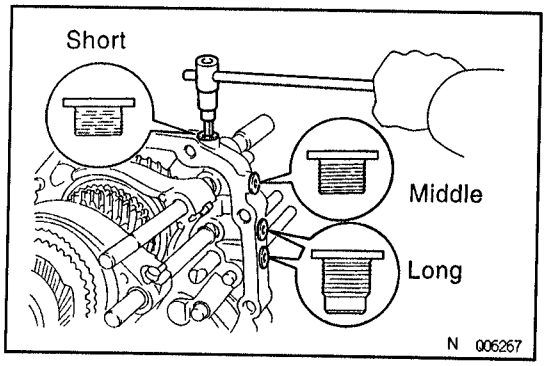

13. REMOVE FRONT MAGNET

14. REMOVE LOCKING BALL AND SPRING

(a) Using a hexagon wrench, remove the 4 straight screw plugs.
Sealant: Part No.08833–00080, THREE BOND 1344, LOCTITE 242 or equivalent
Torque: 25 N·m (250 kgf·cm, 18 ft·lbf)

(b) Using a magnetic finger, remove the 3 springs and balls.

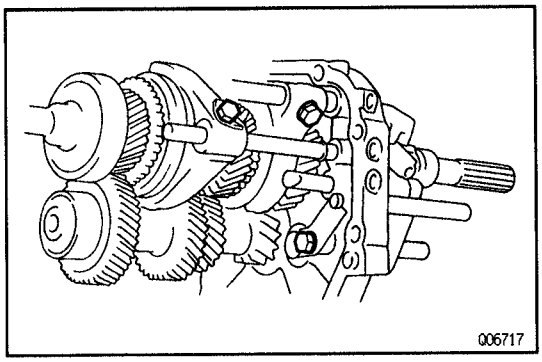

15. REMOVE SHIFT FORK, SHIFT FORK SHAFT AND REVERSE IDLER GEAR

(a) Remove the No.1 shift fork set bolt.
Torque: 20 N·m (200 kgf·cm, 14 ft·lbf)

(b) Remove the No.2 shift fork set bolt.
Torque: 20 N·m (200 kgf·cm, 14 ft·lbf)

(c) Remove the bolt and reverse idler gear shaft stopper.
Torque: 25 N·m (250 kgf·cm, 18 ft·lbf)

(d) Remove the reverse idler gear and shaft with the snap ring.

(e) Remove the No.1 shift fork and shaft.

(f) Using a magnetic finger, remove the No.1 and No.2 interlock pins.
INSTALLATION HINT: Apply MP grease to the No.1 and No.2 interlock pins.

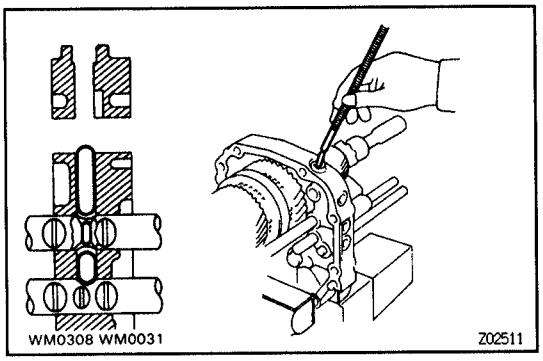

(g) Using 2 screwdrivers and a hammer, tap out the No. 2 shift fork shaft snap ring.

(h) Remove the No. 2 shift fork and shaft.

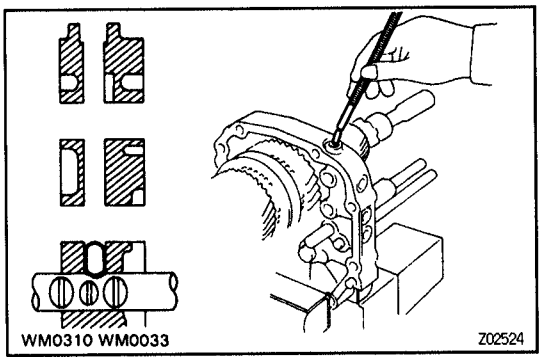

(i) Using a magnetic finger, remove the No. 3 interlock pin.
INSTALLATION HINT: Apply MP grease to the No.3 interlock pin.

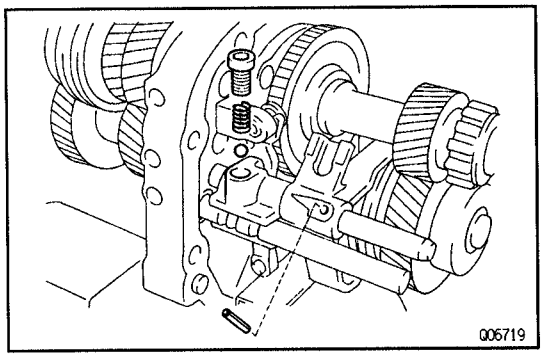

(j) Using a pin punch and hammer, drive out the No. 3 shift fork pin.

(k) Using a hexagon wrench, remove the plug.
Torque: 25 N·m (250 kgf·cm, 18 ft·lbf)

(l) Using a magnetic finger, remove the spring and ball.

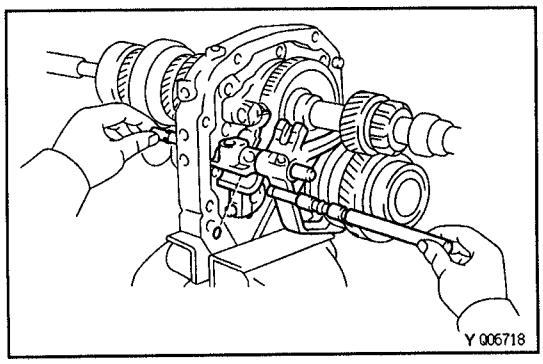

(m) Pull out the No.4 shift fork shaft.

(n) Remove the interlock pin.
INSTALLATION HINT: Apply MP grease to the pin.

(o) Remove the No.3 shift fork, fork shaft and reverse shift arm with the snap ring.
INSTALLATION HINT: Align the No.3 shift fork with the No.3 hub sleeve groove, put the reverse shift arm into the pivot of bearing retainer and align the reverse shift arm shoe with the reverse idler gear groove.

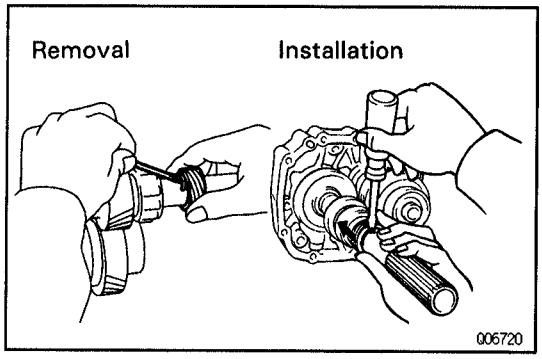

16. 2WD:
REMOVE SPEEDOMETER DRIVE GEAR
Using a screwdriver, pry out both ends of the clip and remove the drive gear.

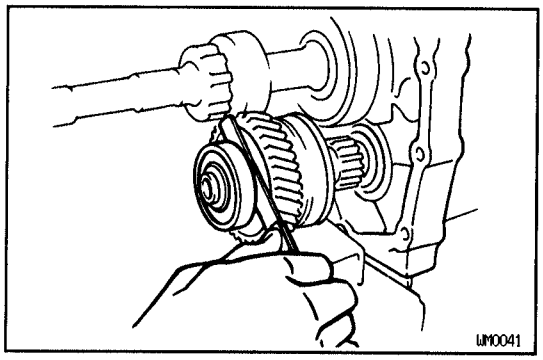

17. INSPECT COUNTER 5TH GEAR THRUST CLEARANCE
Using a feeler gauge, measure the counter 5th gear thrust clearance.
Standard clearance:
0.10–0.41 mm (0.0039–0.0161 in.)
Maximum clearance: 0.46 mm (0.0181 in.)

MT

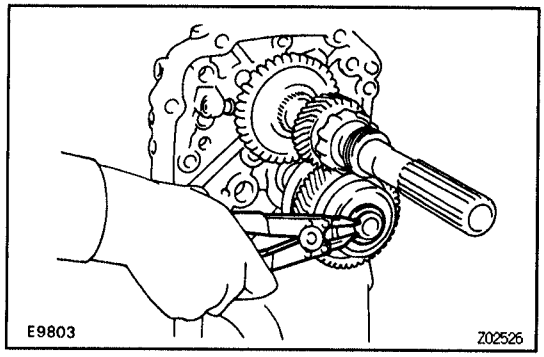

18. REMOVE COUNTER REAR BEARING, SPACER, COUNTER 5TH GEAR AND NEEDLE ROLLER BEARING
(a) Using a snap ring expander, remove the snap ring.
INSTALLATION HINT: Select a snap ring that will allow minimum axial play.

Mark	Thickness mm (in.)
1	1.90–1.95 (0.0748–0.0768)
2	1.96–2.01 (0.0772–0.0791)
3	2.02–2.07 (0.0795–0.0815)
4	2.08–2.13 (0.0819–0.0839)
5	2.14–2.19 (0.0843–0.0862)
6	2.20–2.25 (0.0866–0.0886)
7	2.26–2.31 (0.0890–0.0909)

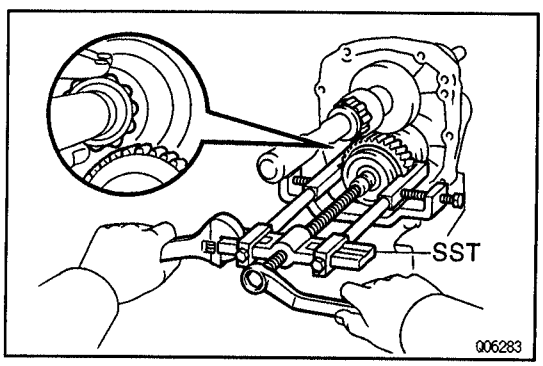

(b) Using SST, remove the rear bearing, spacer, 5th gear and bearing.
SST 09950–40010
REMOVAL NOTICE: Be careful not to catch the output shaft rear bearing roller on the counter 5th gear.
(c) Remove the spacer.

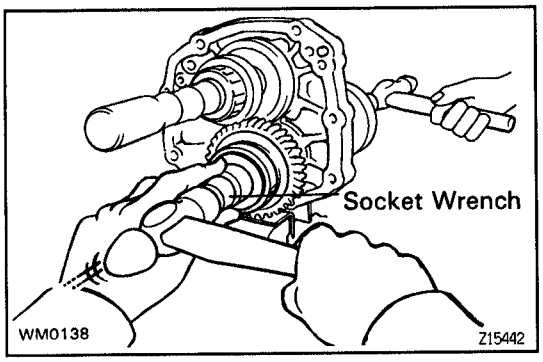

INSTALLATION HINT:

- Install the counter 5th gear with the 5th gear gaps aligned with the synchronizer cone ring pin.
- Using a socket wrench and hammer, drive in the bearing.
- When driving in the bearing, support the counter shaft in front with 3–5 lb hammer or equivalent.

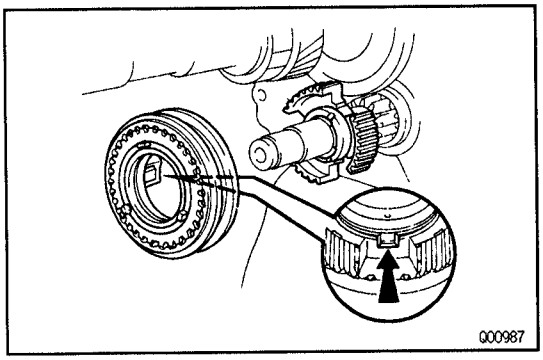

19. REMOVE SYNCHRONIZER RING ASSEMBLY WITH NO.3 HUB SLEEVE AND NO.3 CLUTCH HUB

(a) Remove the synchronizer ring assembly with the No.3 hub sleeve from the No.3 clutch hub.

MT

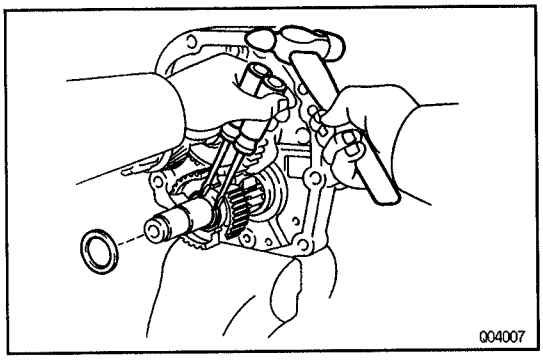

(b) Remove the spacer.

(c) Using 2 screwdrivers and a hammer, tap out the snap ring.

INSTALLATION HINT: Select a snap ring that will allow minimum axial play.

Mark	Thickness mm (in.)
2	2.06–2.11 (0.0811–0.0831)
3	2.12–2.17 (0.0835–0.0854)
4	2.18–2.23 (0.0858–0.0878)
5	2.24–2.29 (0.0882–0.0902)

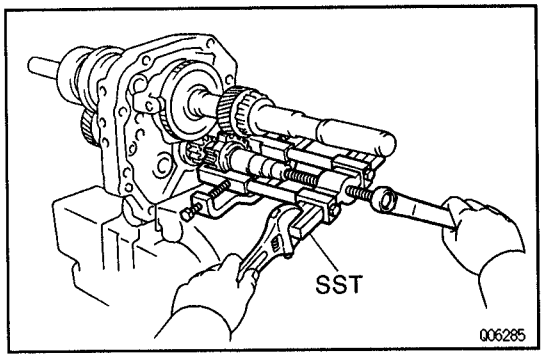

(d) Using SST, remove the No.3 clutch hub.
SST 09950–40010

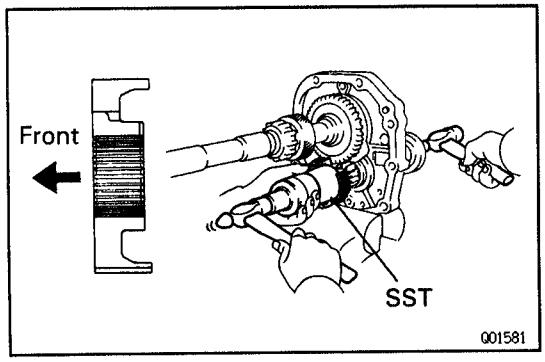

INSTALLATION HINT: Using SST and a hammer, drive in the No.3 clutch hub.
SST 09316–60011 (09316–00011, 09316–00071)

- When installing the No.3 clutch hub, support the counter shaft in front with a 3–5 lb hammer or equivalent.

20. REMOVE REAR MAGNET

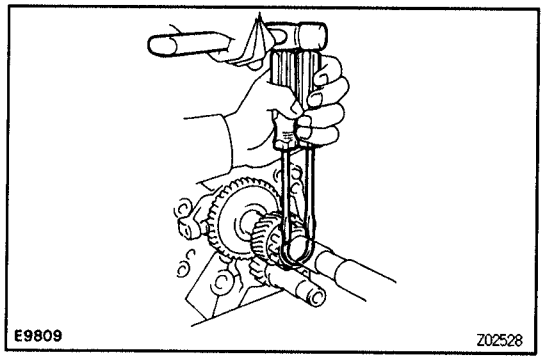

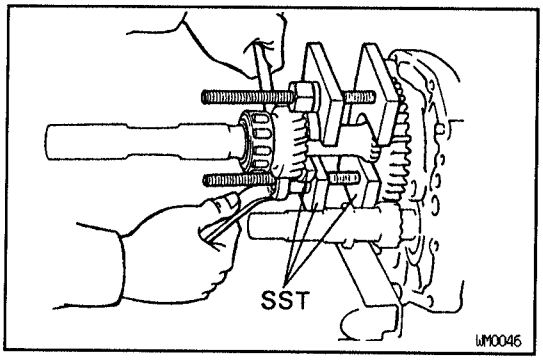

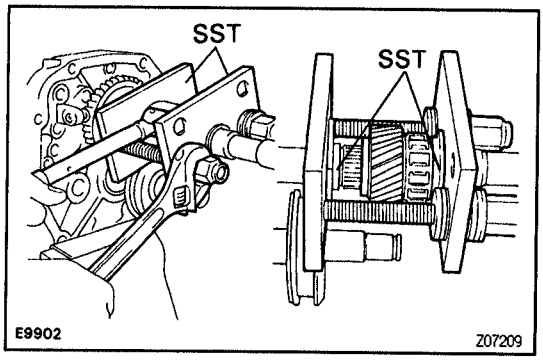

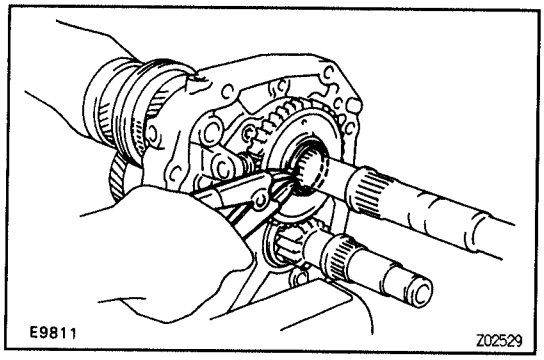

21. REMOVE OUTPUT SHAFT REAR BEARING AND 5TH GEAR

(a) Using 2 screwdrivers and a hammer, tap out the snap ring.
INSTALLATION HINT: Select a snap ring that will allow minimum axial play.

Mark	Thickness mm (in.)
8	2.31–2.36 (0.0909–0.0929)
9	2.37–2.42 (0.0933–0.0953)
10	2.43–2.48 (0.0957–0.0976)
11	2.49–2.54 (0.0980–0.1000)
12	2.55–2.60 (0.1004–0.1024)
13	2.61–2.66 (0.1028–0.1047)
14	2.68–2.73 (0.1055–0.1075)
15	2.74–2.79 (0.1079–0.1098)

(b) Using SST, remove the rear bearing and 5th gear.
SST 09312–20011 (09313–00030, 09313–00040, 09313–00050)

INSTALLATION HINT: Using SST, install the 5th gear and rear bearing.
SST 09312–20011 (09313–00010, 09313–00030, 09313–00040, 09313–00050)

22. REMOVE REVERSE GEAR

(a) Using a snap ring expander, remove the snap ring.
INSTALLATION HINT: Select a snap ring that will allow minimum axial play.

Mark	Thickness mm (in.)
5	2.25–2.30 (0.0886–0.0906)
11	2.30–2.35 (0.0906–0.0925)
12	2.35–2.40 (0.0925–0.0945)
13	2.40–2.45 (0.0945–0.0965)
14	2.45–2.50 (0.0965–0.0984)
15	2.50–2.55 (0.0984–0.1004)
16	2.55–2.60 (0.1004–0.1024)
17	2.61–2.66 (0.1028–0.1047)
18	2.67–2.72 (0.1051–0.1071)
19	2.73–2.78 (0.1075–0.1094)
20	2.79–2.84 (0.1098–0.1118)
21	2.85–2.90 (0.1122–0.1142)
22	2.91–2.96 (0.1146–0.1165)
23	2.97–3.02 (0.1169–0.1189)

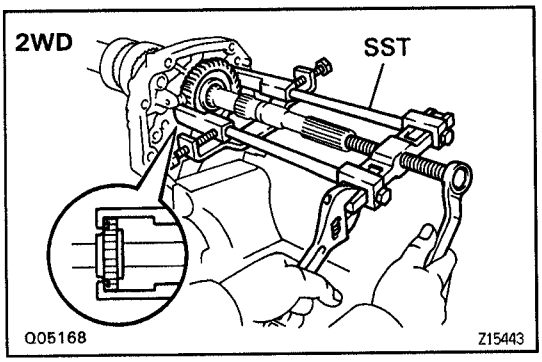

(b) Using SST, remove the reverse gear.
SST 09950–40010

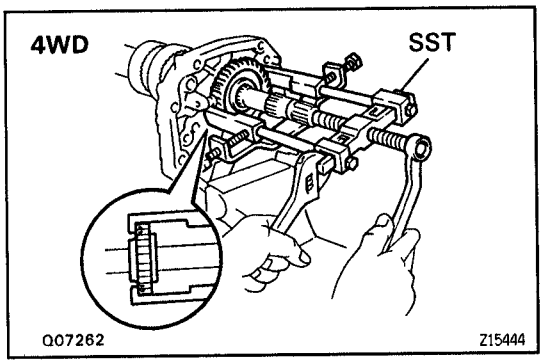

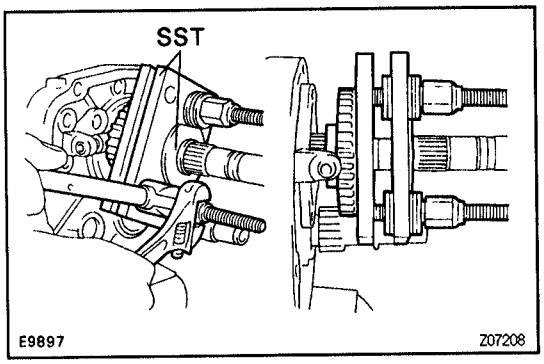

INSTALLATION HINT: Using SST, install the reverse gear.
SST 09312–20011 (09313–00030, 09313–00040, 09313–00050)

23. REMOVE REAR BEARING RETAINER

(a) Using a torx socket wrench, unscrew the 4 torx screws and remove the rear bearing retainer.
Torque: 18 N·m (185 kgf·cm, 13 ft·lbf)
(Torx socket wrench T40 09042–00020)

(b) Using a snap ring expander, remove the 2 snap rings.
INSTALLATION HINT: Be sure the snap ring is flush with the intermediate plate surface.

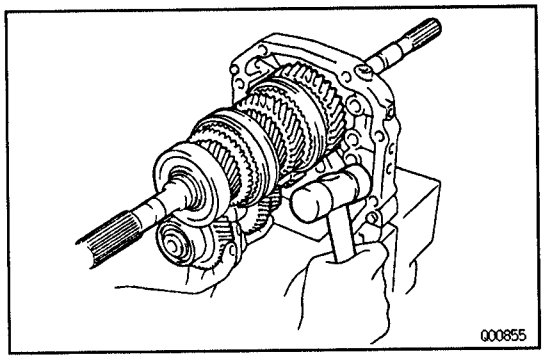

24. REMOVE OUTPUT SHAFT AND COUNTER GEAR FROM INTERMEDIATE PLATE

(a) Remove the output shaft, input shaft and counter gear as a unit from the intermediate plate by pulling on the counter gear and tapping on the intermediate plate with a plastic hammer.

(b) Remove the input shaft from the output shaft.
INSTALLATION HINT:

- Before installing the output shaft, use SST to remove the counter gear center bearing outer race.

SST 09950–60010 (09951–00510), 09950–70010 (09951–07150)

- Install the outer race after installing the counter gear.
- Install the output shaft into the intermediate plate by pulling on the output shaft and tapping on the intermediate plate.

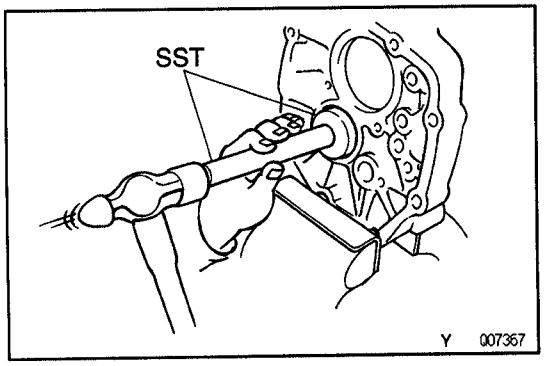

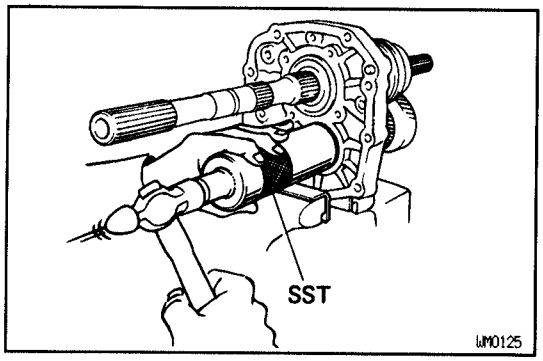

INSTALLATION HINT:

- Apply gear oil to the needle roller bearing.
- Install the needle roller bearing to the input shaft.
- Install the input shaft and counter gear together.
- Using SST and a hammer, install a new counter gear center bearing outer race.

SST 09316–60011 (09316–00011)

- Be careful not to damage the bearing rollers.

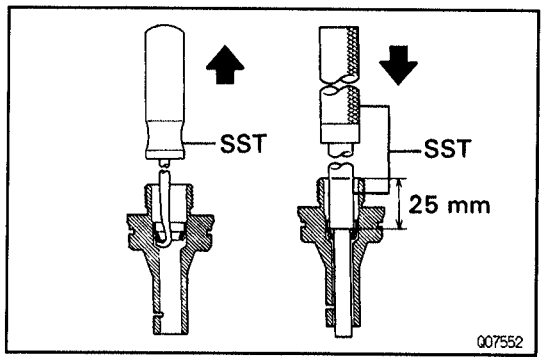

25. 2WD:
IF NECESSARY, REPLACE SPEEDOMETER DRIVEN GEAR OIL SEAL

(a) Using SST, remove the oil seal.
SST 09921–00010

(b) Coat the lip of oil seal with MP grease.

(c) Using SST, drive in a new oil seal.
SST 09201–10000 (09201–01080),
09950–70010 (09951–07150)
Drive in depth: 25 mm (0.98 in.)

BASIC SUBASSEMBLY REASSEMBLY

MT0DK–01

Assembly is in the reverse order of separation.
HINT: Coat all of the sliding and rotating surfaces with gear oil before assembly.

INPUT SHAFT
COMPONENTS

MT00F–06

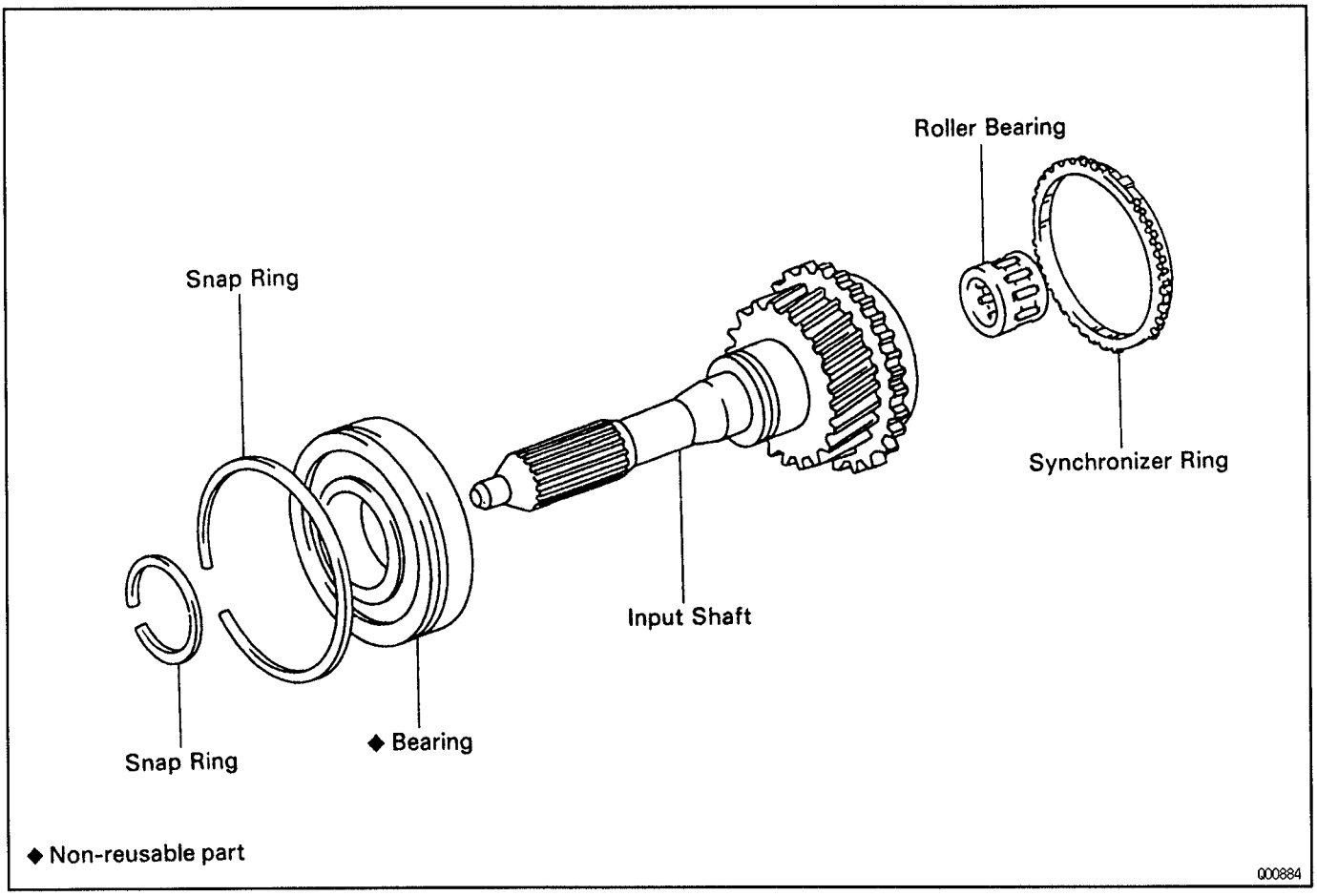

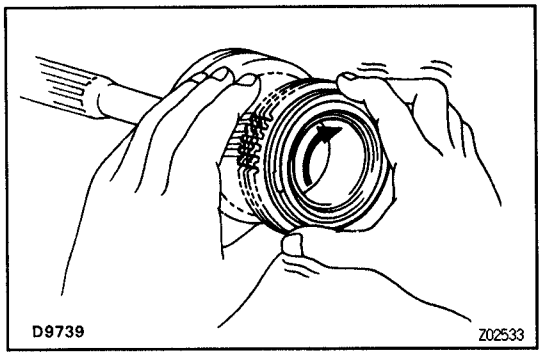

MT00G–0F

INPUT SHAFT INSPECTION

INSPECT SYNCHRONIZER RING

(a) Check for wear or damage.

(b) Check the braking effect of the synchronizer ring.
Turn the synchronizer ring in one direction while pushing it to the gear cone. Check that the ring locks.
If the braking effect is insufficient, apply a small amount of fine lapping compound between the synchronizer ring and gear cone. Lightly rub the synchronizer ring and gear cone together.
NOTICE: Ensure the fine lapping compound is completely washed off after rubbing.

(c) Check again the braking effect of the synchronizer ring.

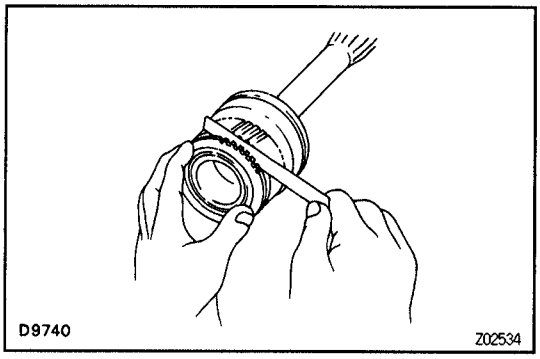

(d) Using a feeler gauge, measure the clearance between the synchronizer ring back and gear spline end.
Minimum clearance: 0.5 mm (0.020 in.)
If the clearance is less than the minimum, replace the synchronizer ring and gear cone by applying a small amount of fine lapping compound.
NOTICE: Ensure the fine lapping compound is completely washed off after rubbing.

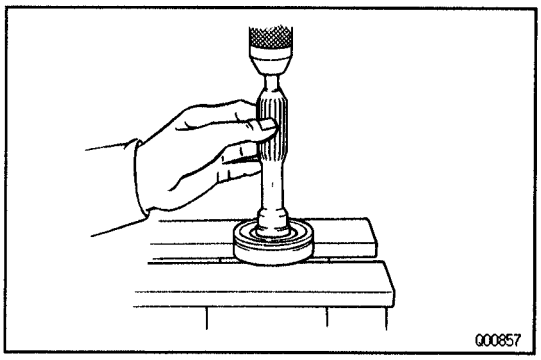

BEARING REPLACEMENT

MT0AZ-03

IF NECESSARY, REPLACE INPUT SHAFT BEARING

(a) Using a snap ring expander, remove the snap ring.
(b) Using a press, remove the bearing.

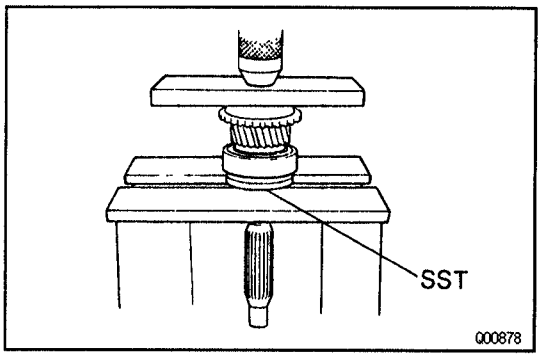

(c) Using SST and a press, install a new bearing.
SST 09506–35010

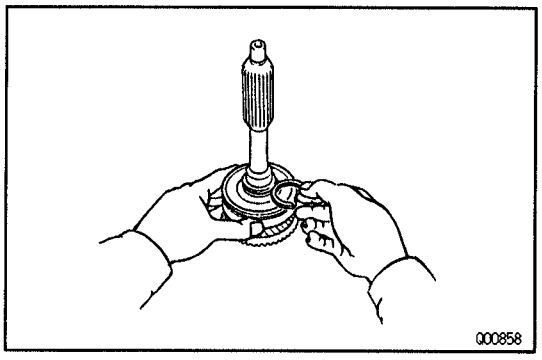

(d) Select a snap ring that will allow minimum axial play.

Mark	Thickness mm (in.)
1	2.05 – 2.10 (0.0807 – 0.0827)
2	2.10 – 2.15 (0.0827 – 0.0846)
3	2.15 – 2.20 (0.0846 – 0.0866)
4	2.20 – 2.25 (0.0866 – 0.0886)
5	2.25 – 2.30 (0.0886 – 0.0906)
11	2.30 – 2.35 (0.0906 – 0.0925)
12	2.35 – 2.40 (0.0925 – 0.0945)

(e) Using a snap ring expander, install the snap ring.

OUTPUT SHAFT
COMPONENTS

MT00J–08

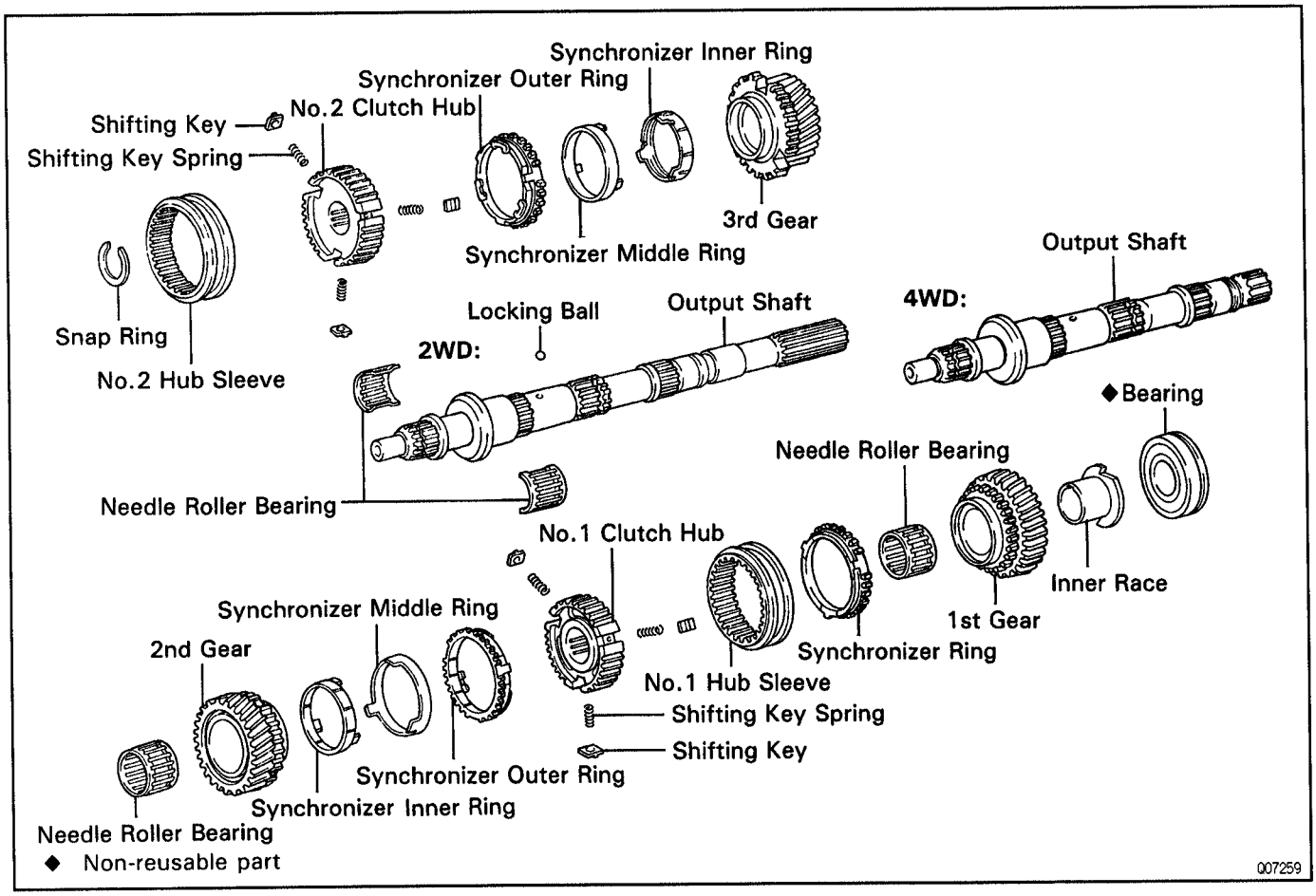

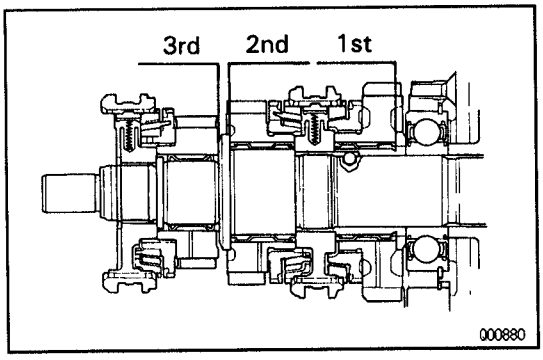

MT080–04

OUTPUT SHAFT DISASSEMBLY

1. INSPECT EACH GEAR THRUST CLEARANCE

Using a feeler gauge, measure the thrust clearance of each gear.

Standard clearance:

0.10–0.25 mm (0.0039–0.0098 in.)

Maximum clearance: 0.30 mm (0.0118 in.)

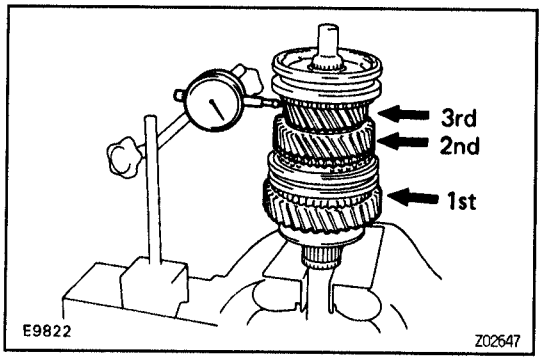

2. INSPECT EACH GEAR RADIAL CLEARANCE

Using a dial indicator, measure the radial clearance of each gear.

Standard clearance:

1st and 2nd gear:

0.009–0.060 mm (0.0004–0.0024 in.)

3rd gear:

0.015–0.066 mm (0.0006–0.0026 in.)

Maximum clearance:

1st and 2nd gear: 0.150 mm (0.0059 in.)

3rd gear: 0.200 mm (0.0079 in.)

If the clearance exceeds the maximum, replace the gear, shaft or needle roller bearing.

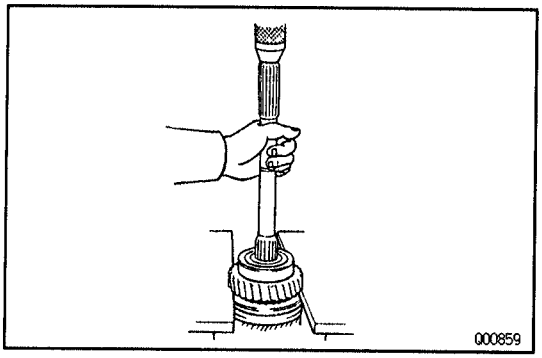

3. REMOVE OUTPUT SHAFT CENTER BEARING AND 1ST GEAR ASSEMBLY

(a) Shift the No.1 hub sleeve onto the 2nd gear.

(b) Using a press, remove the center bearing, 1st gear, needle roller bearing, inner race and synchronizer ring.

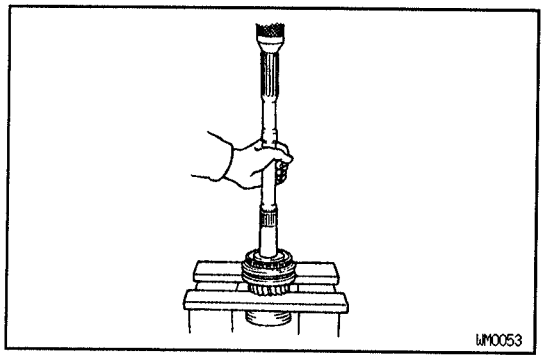

4. REMOVE LOCKING BALL ON OUTPUT SHAFT

Using a magnetic finger, remove the locking ball.

5. REMOVE NO. 1 HUB SLEEVE ASSEMBLY, 2 ND GEAR AND NEEDLE ROLLER BEARING

Using a press, remove the parts from the shaft as an assembly.

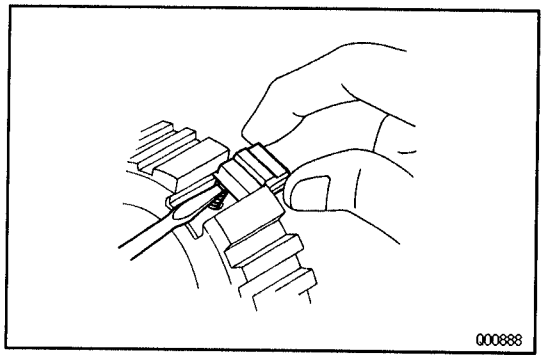

6. REMOVE NO.1 HUB SLEEVE, SHIFTING KEY AND SPRING FROM NO. 1 CLUTCH HUB

(a) Remove the No.1 hub sleeve from the No.1 clutch hub.

(b) Push the shifting key spring with a screwdriver, remove the 3 shifting keys and key springs.

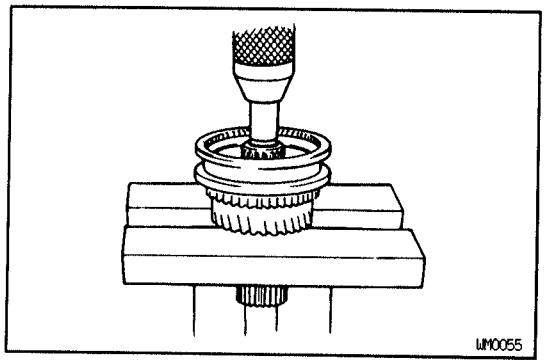

7. REMOVE NO.2 HUB SLEEVE ASSEMBLY AND 3RD GEAR

(a) Using a snap ring expander, remove the snap ring.

(b) Using a press, remove the No. 2 hub sleeve, synchronizer ring and 3rd gear.

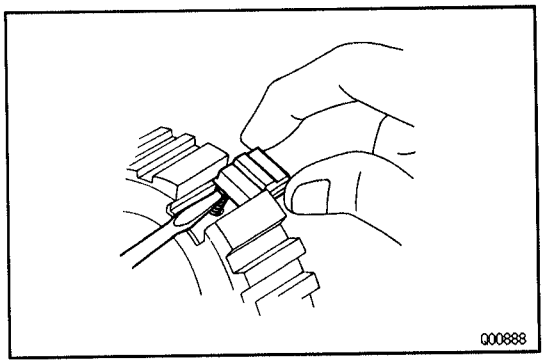

8. **REMOVE NO.2 HUB SLEEVE, SHIFTING KEY AND SPRING FROM NO.2 CLUTCH HUB**

(a) Remove the No.2 hub sleeve from the No.2 clutch hub.

(b) Push the shifting key spring with a screwdriver, remove the 3 shifting keys and key springs.

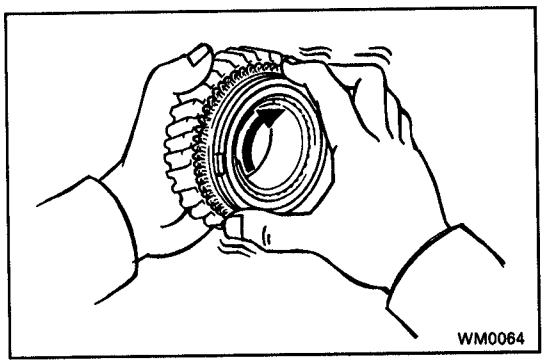

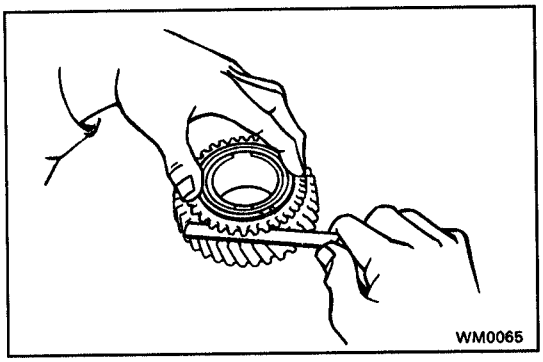

OUTPUT SHAFT COMPONENT PARTS INSPECTION

MTOOL–08

1. **INSPECT 1ST GEAR SYNCHRONIZER RING**

(a) Check for wear or damage.

(b) Check the braking effect of the synchronizer ring.
Turn the synchronizer ring in one direction while pushing it to the gear cone. Check that the ring locks.
If the braking effect is insufficient, apply a small amount of fine lapping compound between the synchronizer ring and gear cone. Lightly rub the synchronizer ring and gear cone together.
NOTICE: Ensure the fine lapping compound is completely washed off after rubbing.

(c) Check again the braking effect of the synchronizer ring.

(d) Using a feeler gauge, measure the clearance between the synchronizer ring back and gear spline end.
Minimum clearance: 0.5 mm (0.020 in.)
If the clearance is less than the minimum, replace the synchronizer ring and gear cone by applying a small amount of fine lapping compound.
NOTICE: Ensure the fine lapping compound is completely washed off after rubbing.

MT

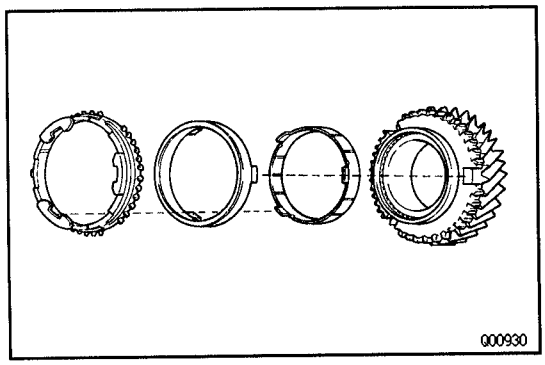

2. **INSPECT 2 ND AND 3 RD GEAR SYNCHRONIZER RINGS**

(a) Check for wear or damage.

(b) Install the synchronizer inner ring, middle ring and outer ring to each gear.

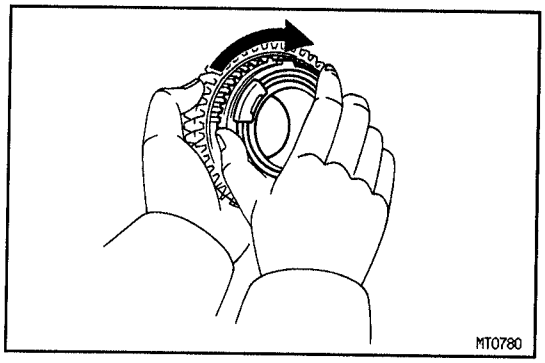

(c) Check the braking effect of the synchronizer ring. Turn the synchronizer ring in one direction while pushing it to the gear cone. Check that the ring locks.
If it does not lock, replace the synchronizer ring.

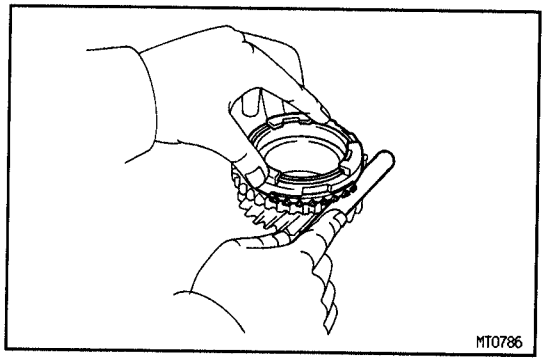

(d) Using a feeler gauge, measure the clearance between the synchronizer ring back and the gear spline end.
Minimum clearance: 0.7 mm (0.028 in.)
If the clearance is less than the minimum, replace the synchronizer ring.

MT

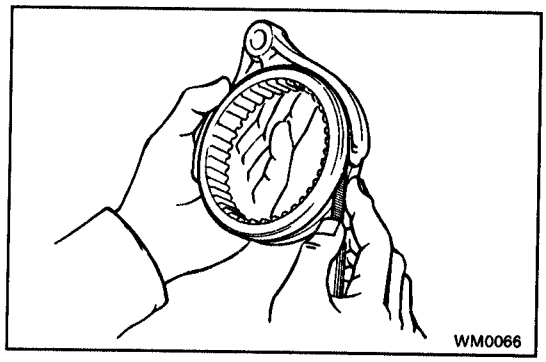

3. INSPECT SHIFT FORK AND HUB SLEEVES CLEARANCE

Using a feeler gauge, measure the clearance between the hub sleeves and shift forks.
Maximum clearance: 1.0 mm (0.039 in.)
If the clearance exceeds the maximum, replace the shift fork or hub sleeve.

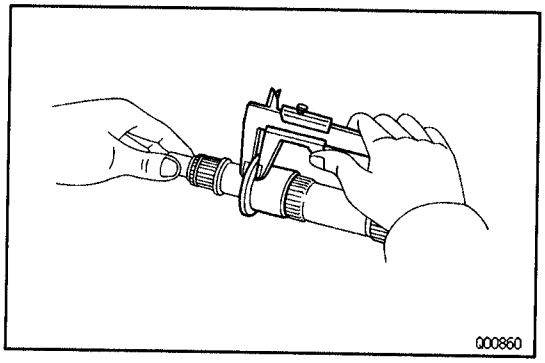

4. INSPECT OUTPUT SHAFT AND INNER RACE

(a) Using vernier calipers, measure the output shaft flange thickness.
Minimum thickness: 5.60 mm (0.2205 in.)
If the thickness is less than the minimum, replace the output shaft.

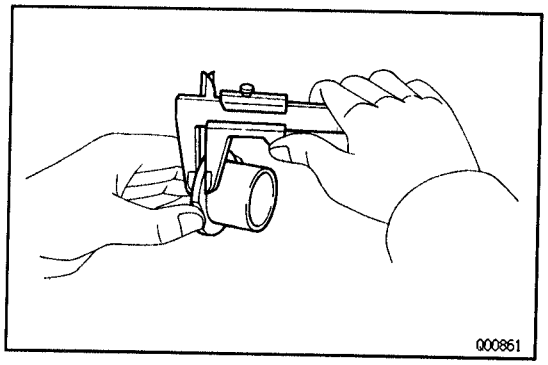

(b) Using vernier calipers, measure the inner race flange thickness.
Minimum thickness: 4.78 mm (0.1881 in.)
If the thickness is less than the minimum, replace the inner race.

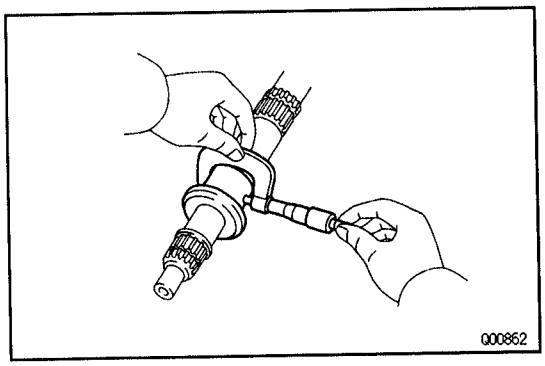

(c) Using a micrometer, measure the outer diameter of the output shaft journal.
Minimum diameter:
2nd gear: 42.975 mm (1.6919 in.)
3rd gear: 31.969 mm (1.2586 in.)
If the outer diameter is less than the minimum, replace the output shaft.

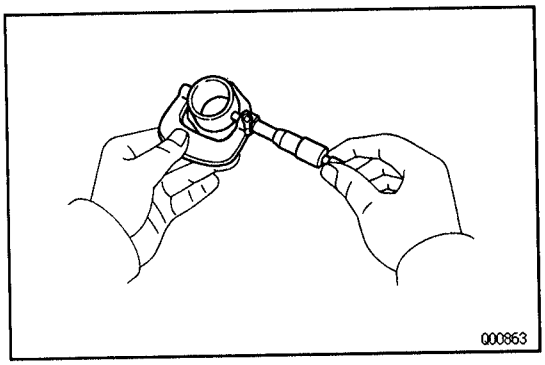

(d) Using a micrometer, measure the outer diameter of the inner race.
Minimum diameter: 42.975 mm (1.6919 in.)
If the outer diameter is less than the minimum, replace the inner race.

MT

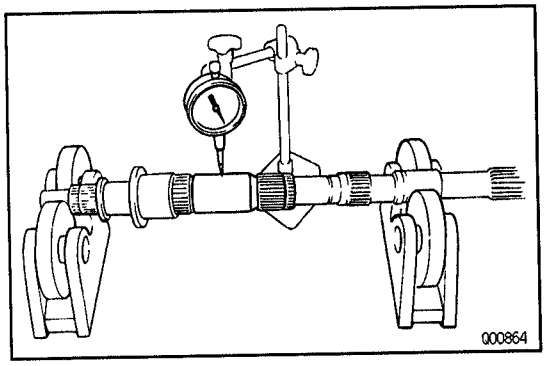

(e) Using a dial indicator, check the shaft runout.
Maximum runout: 0.06 mm (0.0024 in.)
If the runout exceeds the maximum, replace the output shaft.

MT081-04

OUTPUT SHAFT ASSEMBLY

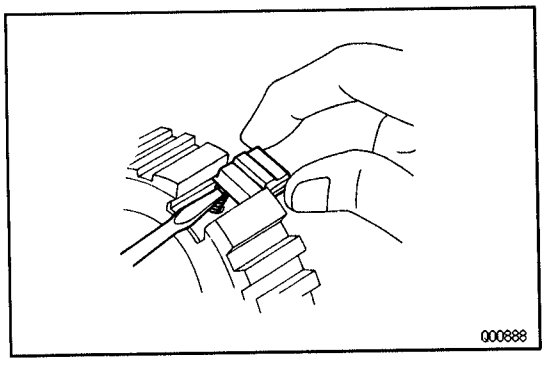

HINT: Coat all of the sliding and rotating surfaces with gear oil before assembly.

1. **INSTALL NO.1 AND NO.2 CLUTCH HUBS INTO HUB SLEEVE**

(a) Install the 3 shifting key springs to the clutch hub.
(b) While pushing the shifting key spring with a screwdriver, install the 3 shifting keys.

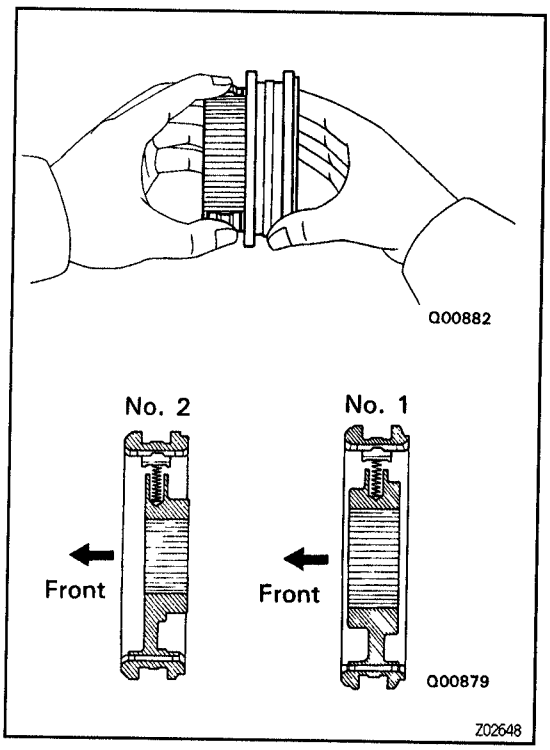

(c) While pushing the 3 shifting keys, install the clutch hub to the hub sleeve, as shown.

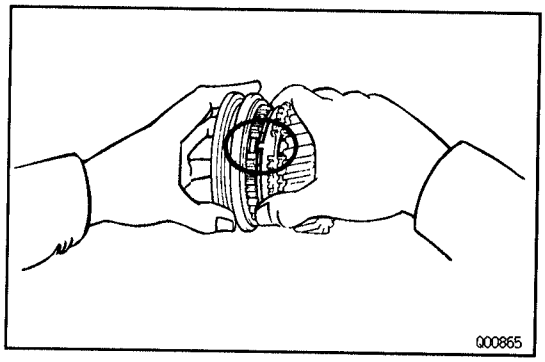

2. INSTALL 3RD GEAR AND NO.2 CLUTCH HUB ON OUTPUT SHAFT

(a) Apply gear oil to the shaft.

(b) Place the synchronizer ring on the gear and align the ring slots with the shifting keys.

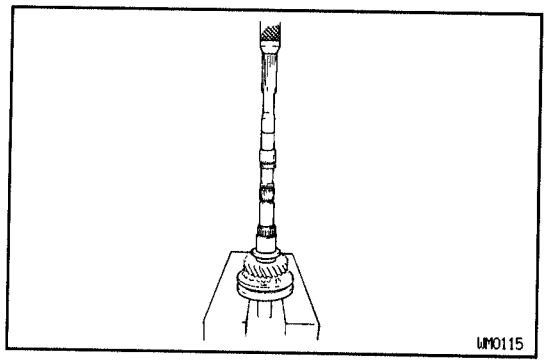

(c) Using a press, install the 3rd gear and No.2 clutch hub.

3. INSTALL SNAP RING

(a) Select a snap ring that will allow minimum axial play.

Mark	Thickness mm (in.)
C–1	1.75–1.80 (0.0689–0.0709)
D	1.80–1.85 (0.0709–0.0728)
11	1.86–1.91 (0.0732–0.0752)
12	1.92–1.97 (0.0756–0.0776)
13	1.98–2.03 (0.0780–0.0799)
14	2.04–2.09 (0.0803–0.0823)
15	2.10–2.15 (0.0827–0.0846)

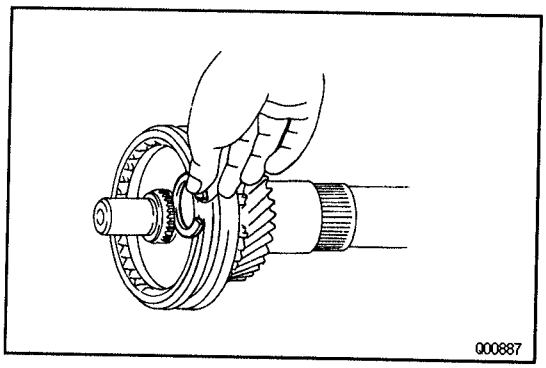

(b) Using a snap ring expander, install the snap ring.

4. INSPECT 3RD GEAR THRUST CLEARANCE
(See page MT–23)

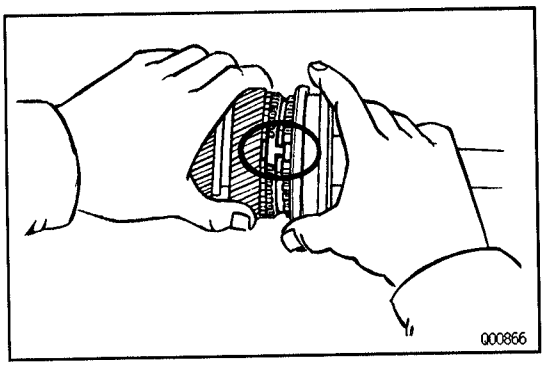

5. INSTALL 2ND GEAR AND NO.1 CLUTCH HUB

(a) Apply gear oil to the shaft and needle roller bearing.
(b) Place the synchronizer ring on the gear and align the ring slots with the shifting keys.
(c) Install the needle roller bearing in the 2nd gear.

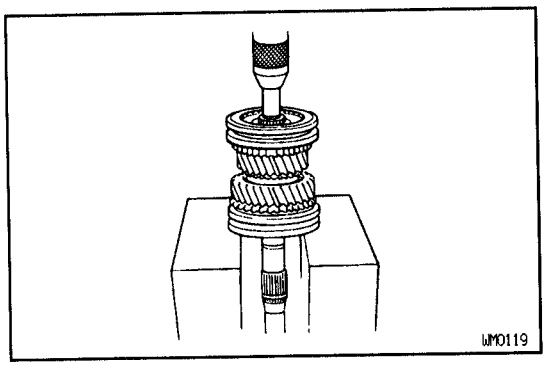

(d) Using a press, install the 2nd gear and No.1 clutch hub.

6. INSPECT 2ND GEAR THRUST CLEARANCE
(See page MT–23)

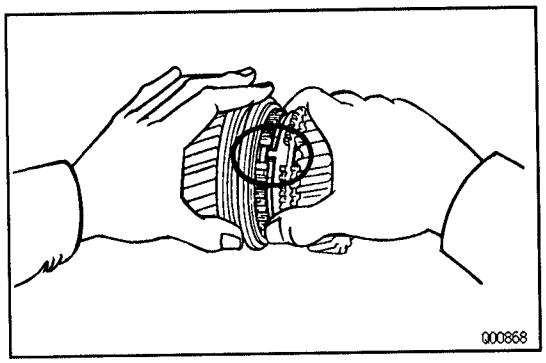

7. INSTALL LOCKING BALL AND 1ST GEAR ASSEMBLY

(a) Install the locking ball in the shaft.
(b) Apply gear oil to the bearing.
(c) Assemble the 1st gear, synchronizer ring, needle roller bearing and bearing inner race.
(d) Install the assembly on the output shaft with the synchronizer ring slots aligned with the shifting keys and turn the inner race to align it with the locking ball.

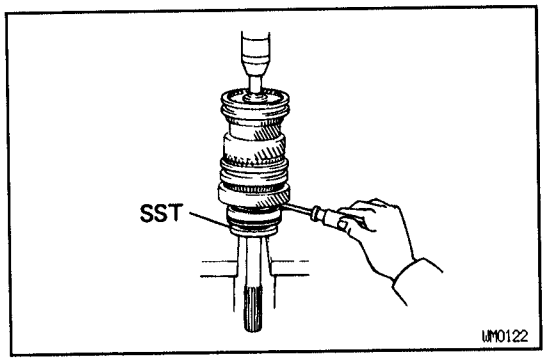

8. INSTALL OUTPUT SHAFT CENTER BEARING

Using SST and a press, install the bearing on the output shaft with the outer race snap ring groove toward the rear.
HINT: Hold the 1st gear inner race to prevent it from falling.
SST 09506–35010

9. INSPECT 1ST GEAR THRUST CLEARANCE
(See page MT–23)

COUNTER GEAR AND REVERSE IDLER GEAR

COMPONENTS

MT00N–0C

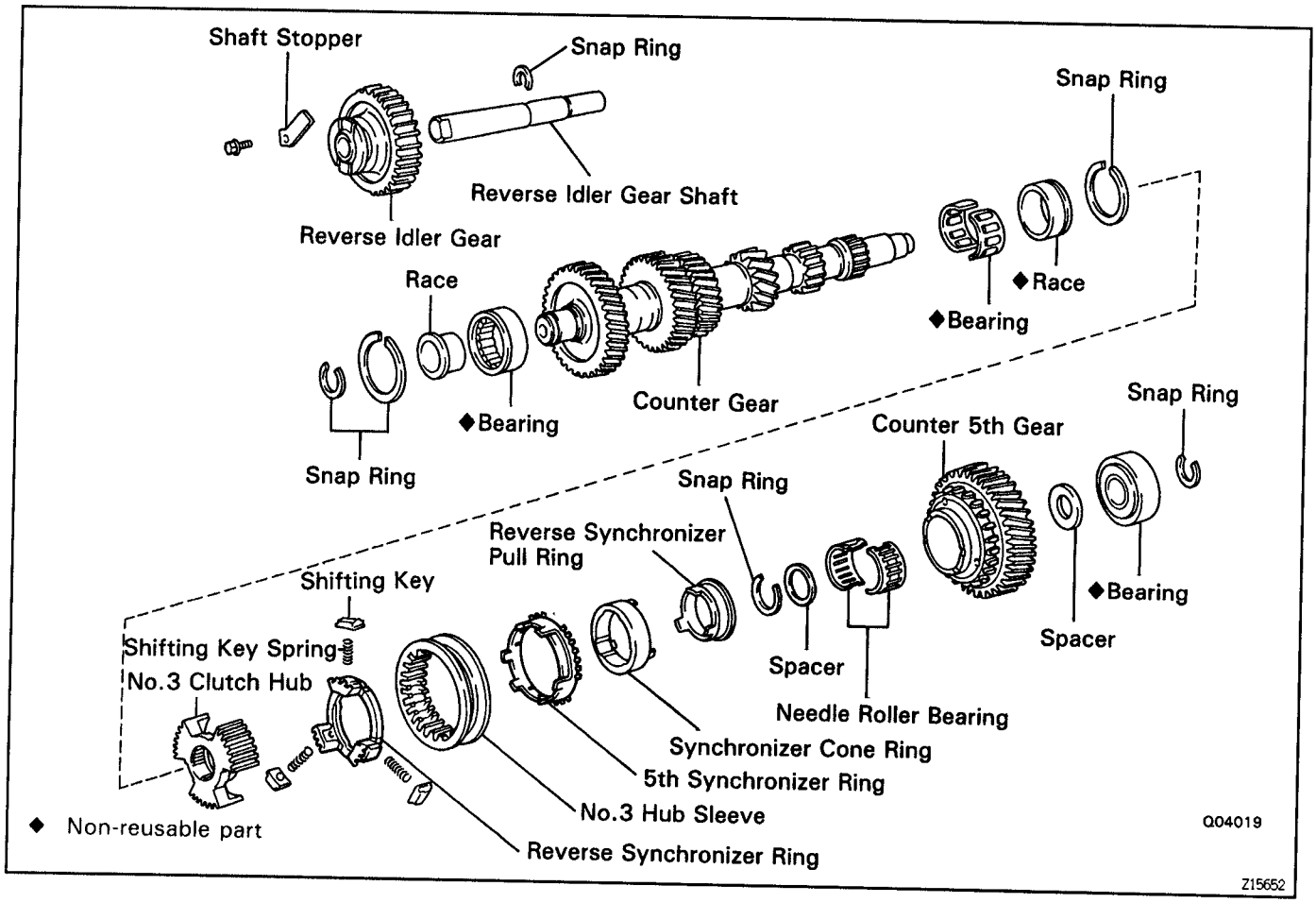

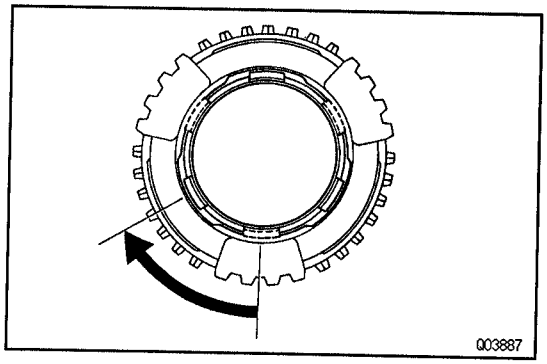

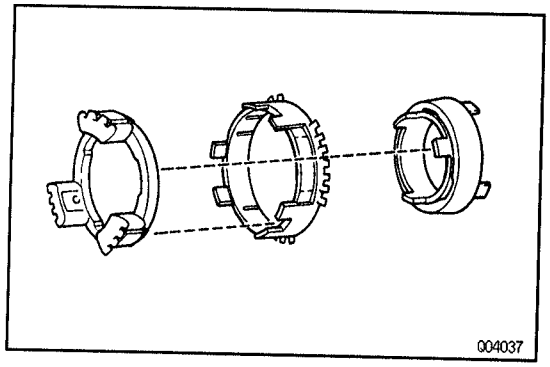

COUNTER GEAR COMPONENT PARTS DISASSEMBLY

MT082–04

REMOVE NO.3 HUB SLEEVE, SHIFTING KEY AND SPRING FROM SYNCHRONIZER RING

(a) Remove the synchronizer ring assembly from the No.3 hub sleeve.

(b) Turn the reverse synchronizer pull ring.

(c) Remove the reverse synchronizer ring and 5th synchronizer ring from the synchronizer pull ring and cone ring.

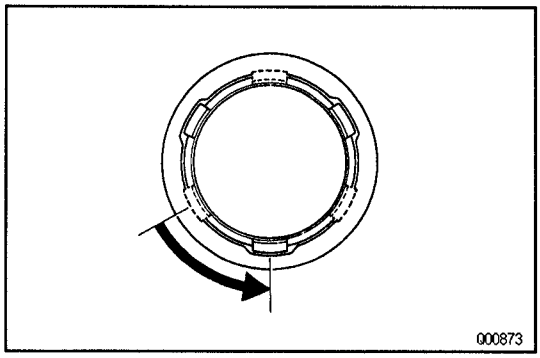

(d) Turn the reverse synchronizer pull ring and separate the pull ring and cone ring.

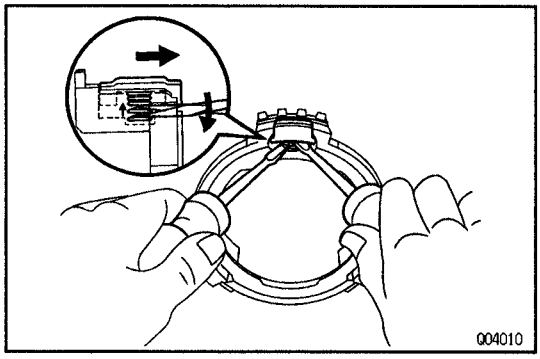

(e) Remove the 3 shifting keys and key springs by carefully levering up the shifting key spring with one screwdriver and levering the shifting key away from the reverse synchronizer ring with another screwdriver.

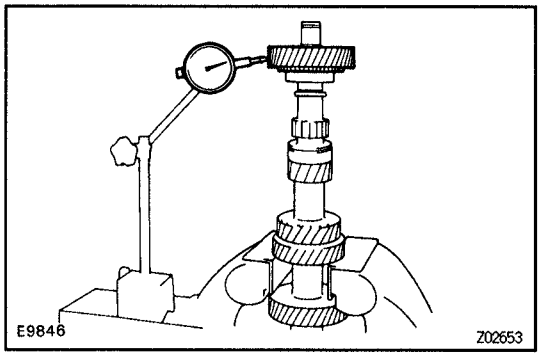

COUNTER GEAR AND REVERSE IDLER GEAR COMPONENT PARTS INSPECTION MT00Q-0E

1. INSPECT COUNTER 5TH GEAR RADIAL CLEARANCE

(a) Install the spacer, counter 5th gear and needle roller bearing to the counter gear.

(b) Using a dial indicator, measure the counter 5th gear radial clearance.

Standard clearance:

0.009–0.060 mm (0.0004–0.0024 in.)

Maximum clearance: 0.150 mm (0.0059 in.)

If the clearance exceeds the maximum, replace the counter gear or needle roller bearing or counter 5th gear.

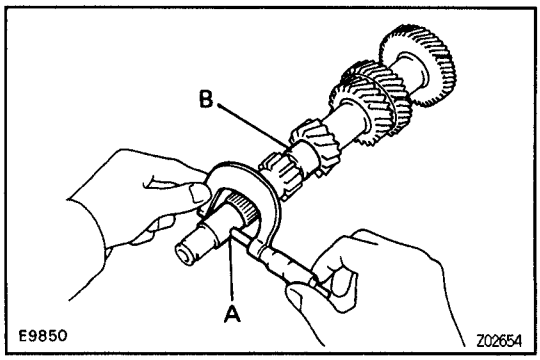

2. INSPECT COUNTER GEAR

Using a micrometer, measure the outer diameter of the counter shaft journal.

Minimum diameter:

Part A: 26.975 mm (1.0620 in.)

Part B: 29.950 mm (1.1791 in.)

If the outer race is less than the minimum, replace the counter gear.

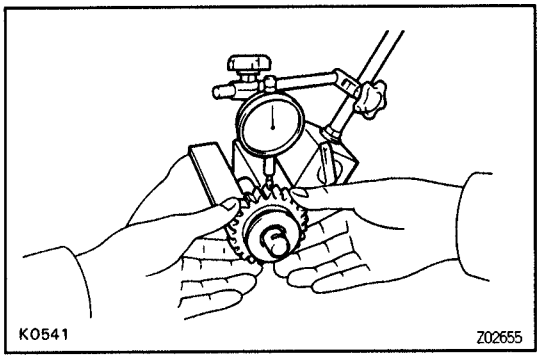

3. INSPECT REVERSE IDLER GEAR RADIAL CLEARANCE

Using a dial indicator, measure the reverse idler gear radial clearance.

Standard clearance:

0.041 – 0.074 mm (0.0016 – 0.0029 in.)

Maximum clearance: 0.194 mm (0.0076 in.)

If the clearance exceeds the maximum, replace the gear or shaft.

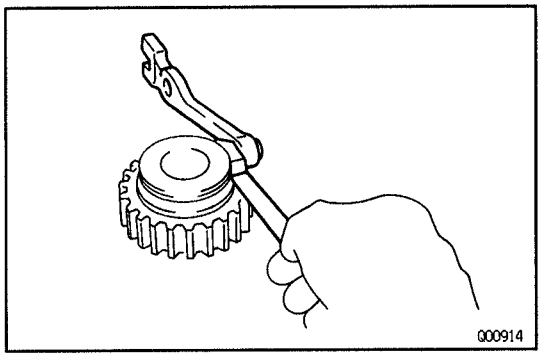

MT

4. INSPECT REVERSE IDLER GEAR AND SHIFT ARM SHOE CLEARANCE

Using a feeler gauge, measure the clearance between the reverse idler gear and shift arm shoe.

Standard clearance:

0.20 – 0.41 mm (0.0079 – 0.0161 in.)

Maximum clearance: 0.90 mm (0.0354 in.)

If the clearance exceeds the maximum, replace the shift arm shoe or reverse idler gear.

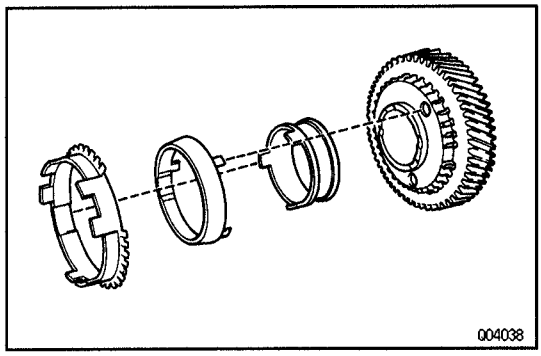

5. INSPECT 5TH GEAR SYNCHRONIZER RING

(a) Check for wear or damage.

(b) Install the synchronizer pull ring, cone ring and outer ring to the 5th gear.

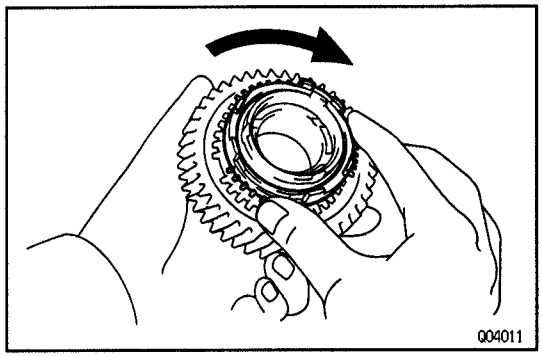

(c) Check the braking effect of the synchronizer ring. Turn the synchronizer ring in one direction while pushing it to the gear cone. Check that the ring locks. If it does not lock, replace the synchronizer ring.

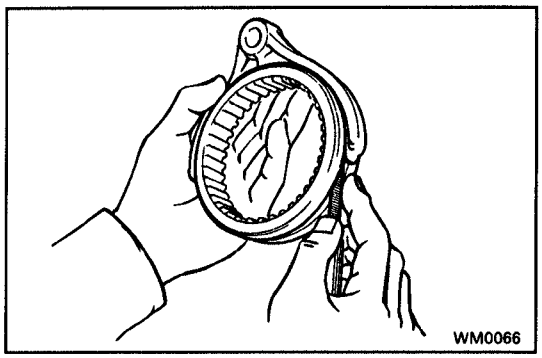

6. INSPECT SHIFT FORK AND HUB SLEEVE CLEARANCE

Using a feeler gauge, measure the clearance between the hub sleeves and shift forks.

Maximum clearance: 1.0 mm (0.039 in.)

If the clearance exceeds the maximum, replace the shift fork or hub sleeve.

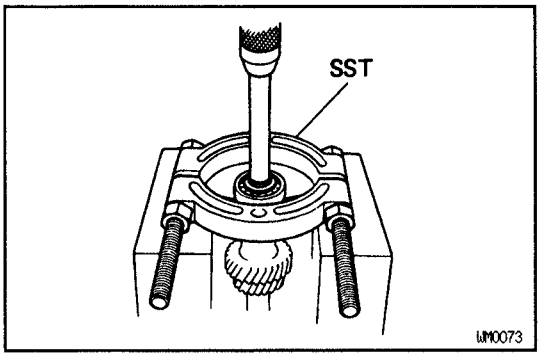

MT0BS-03

BEARING REPLACEMENT

1. IF NECESSARY, REPLACE COUNTER GEAR FRONT BEARING AND SIDE RACE

(a) Using a snap ring expander, remove the snap ring.

(b) Using SST and a press, press out the bearing.
SST 09950–00020

(c) Check the side race for wear or damage.

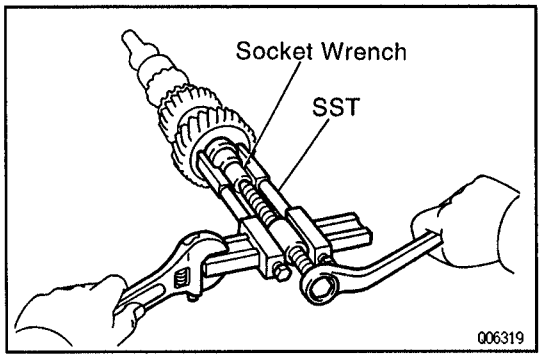

(d) If necessary, remove the side race.
- Using SST and a socket wrench, remove the side race.

SST 09950–40010

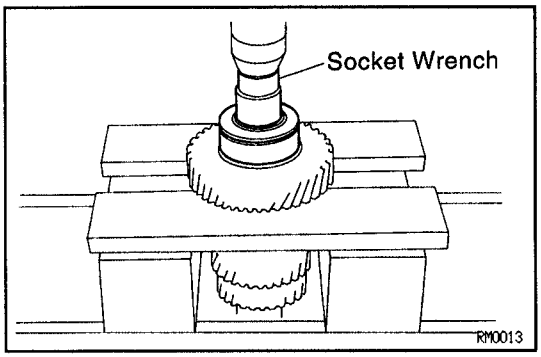

(e) Using a socket wrench and press, install a new bearing, side race and inner race.

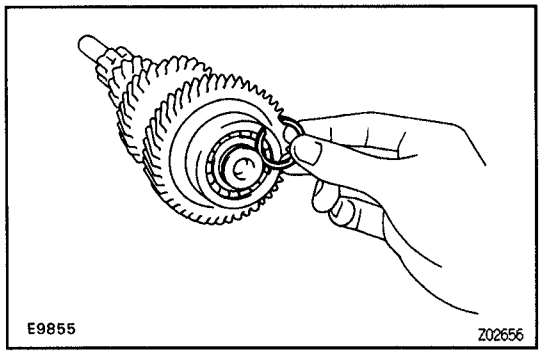

(f) Select a snap ring that will allow minimum axial play.

Mark	Thickness mm (in.)
A	2.05–2.10 (0.0807–0.0827)
B	2.10–2.15 (0.0827–0.0846)
C	2.15–2.20 (0.0846–0.0866)
D	2.20–2.25 (0.0866–0.0886)
E	2.25–2.30 (0.0886–0.0906)
F	2.30–2.35 (0.0906–0.0925)

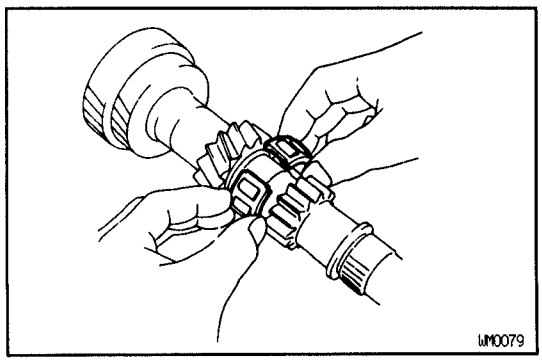

(g) Using a snap ring expander, install the snap ring.

2. IF NECESSARY, REPLACE COUNTER GEAR CENTER BEARING

(a) Remove the bearing from the counter gear.

(b) Install a new bearing on the counter gear.
HINT: Engage the roller cages.

MT

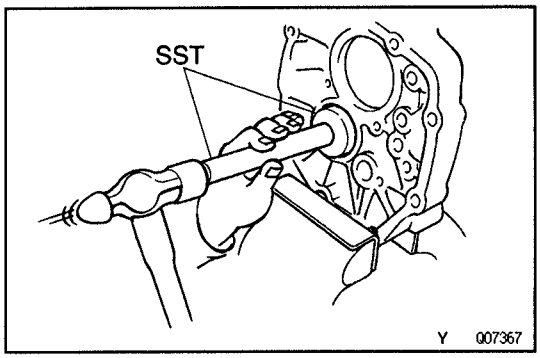

(c) Using SST, tap out the bearing outer race.
SST 09950–60010 (09951–00510),
09950–70010 (09951–07150)
HINT: The outer race will be installed later, as the transmission is assembled.

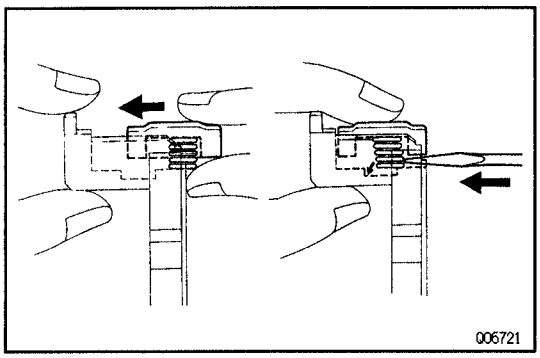

COUNTER GEAR ASSEMBLY

MT084–02

INSTALL SYNCHRONIZER RING ASSEMBLY TO NO.3 HUB SLEEVE

(a) Push the synchronizer key spring, install the shifting key and key spring to the reverse synchronizer ring.
(b) Using a screwdriver, push the 3 key springs into the synchronizer ring spring gaps.

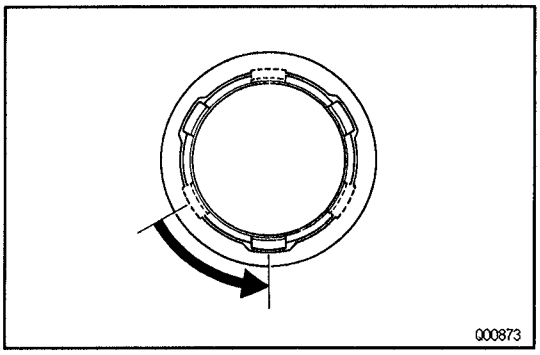

(c) Install the synchronizer cone ring to the reverse synchronizer pull ring and turn the pull ring.

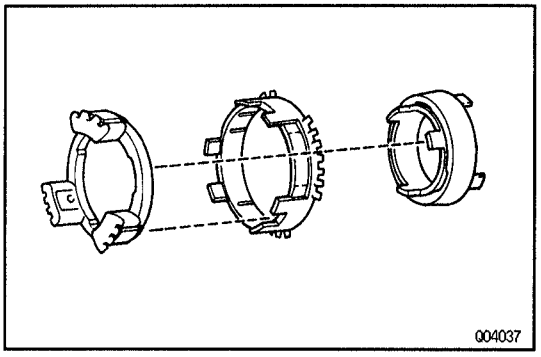

(d) Install the 5th synchronizer ring.
(e) Install the reverse synchronizer ring.

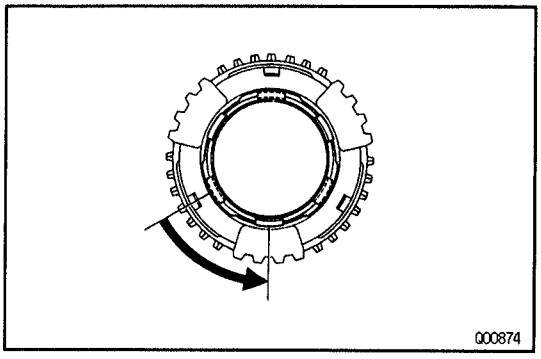

(f) Turn the reverse synchronizer pull ring.

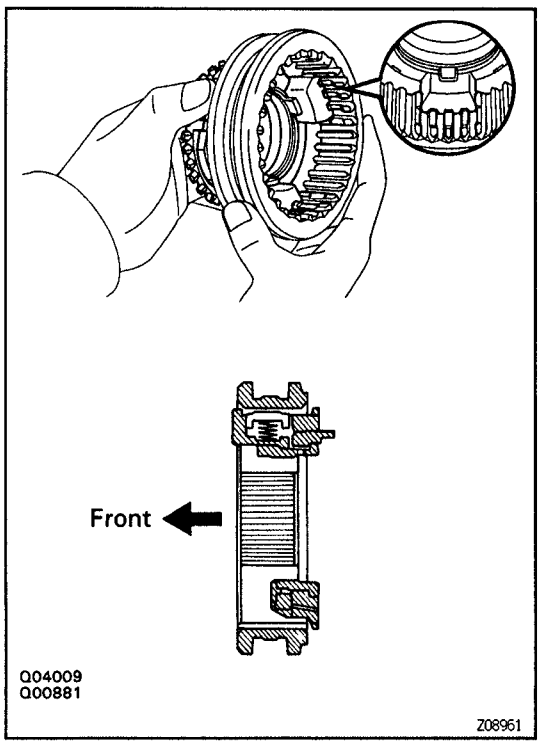

(g) While pushing 3 shifting keys, install the synchronizer ring assembly to the No.3 hub sleeve.

FRONT BEARING RETAINER

COMPONENTS

MT00T–08

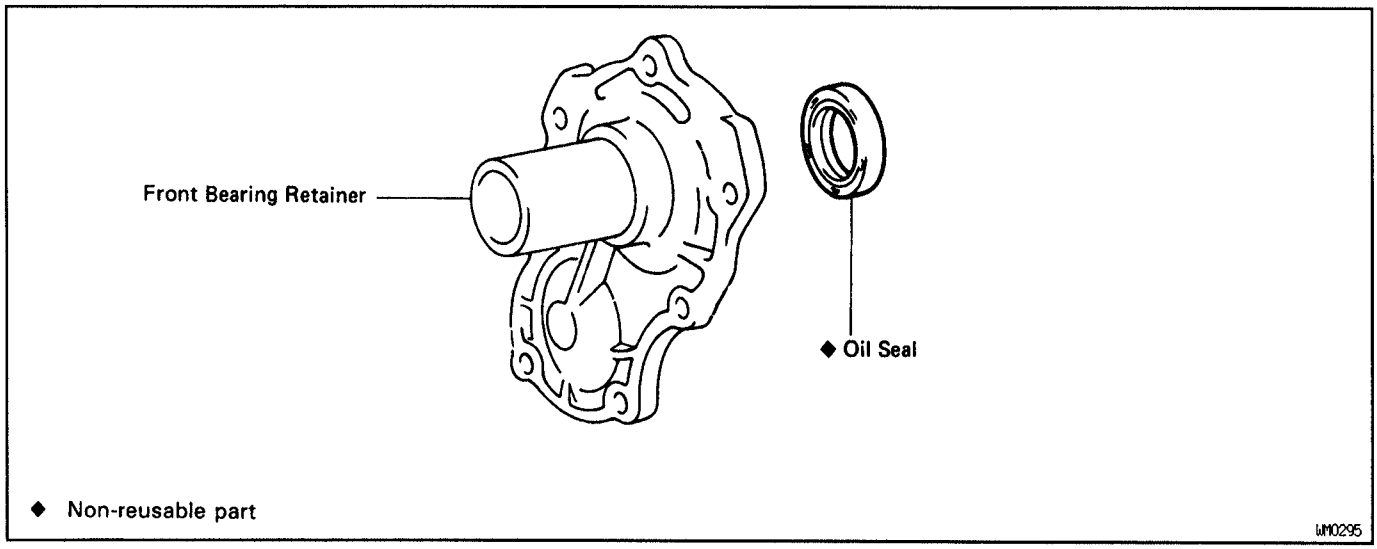

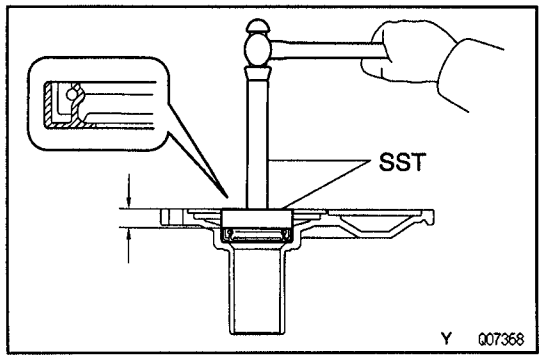

OIL SEAL REPLACEMENT

MT0CB–01

IF NECESSARY, REPLACE FRONT BEARING RETAINER OIL SEAL

(a) Using a screwdriver, pry out the oil seal.

(b) Using SST and a press, install a new oil seal.
SST 09950–60010 (09951–00440),
09950–70010 (09951–07150)
Drive in depth: 12.2 ± 0.5 mm (0.480 ± 0.020 in.)

EXTENSION HOUSING AND TRANSFER ADAPTOR

COMPONENTS

MT00V–0E

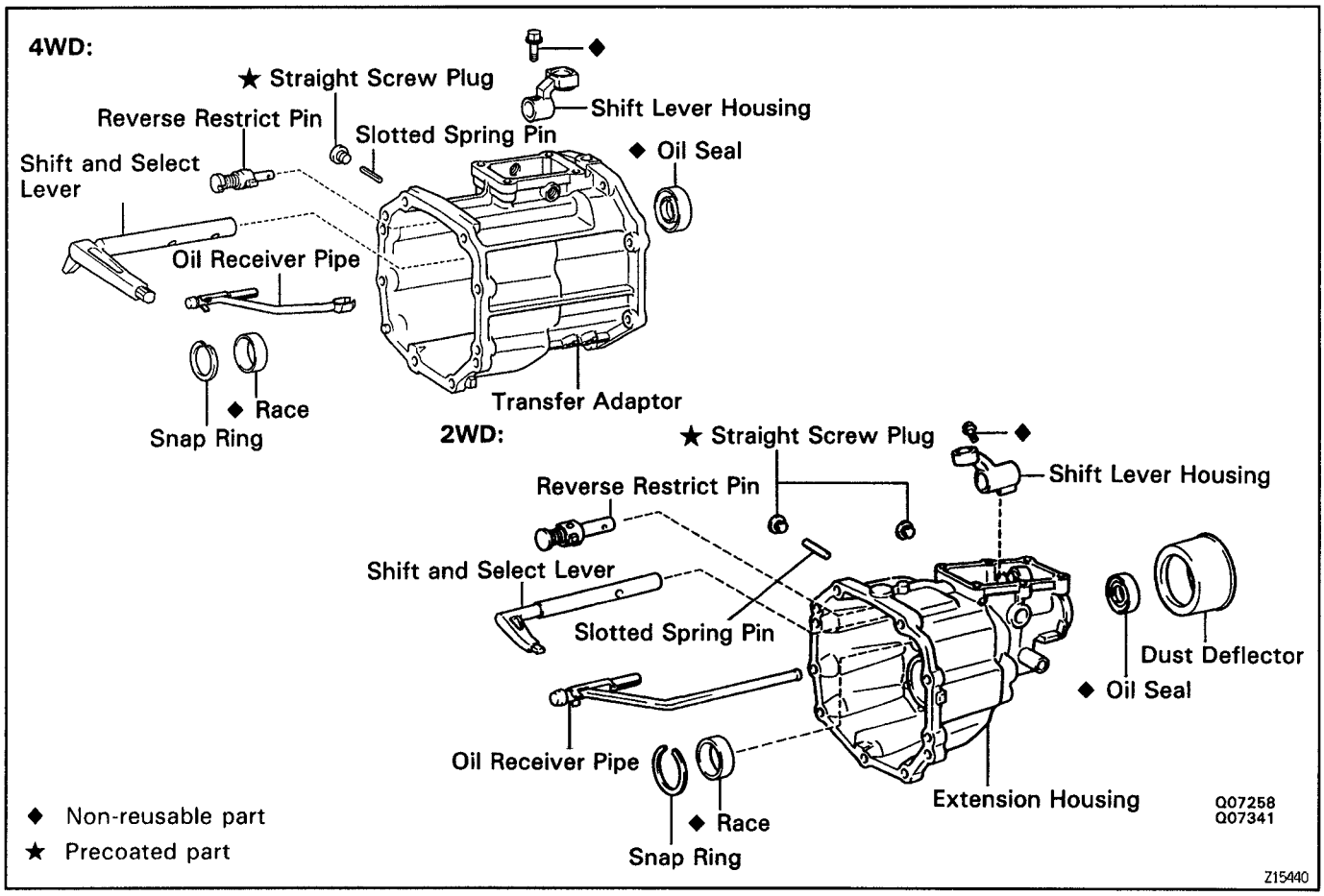

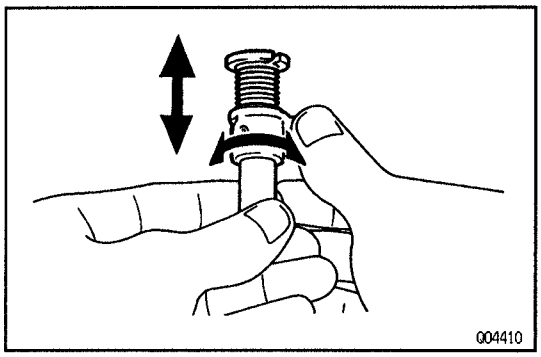

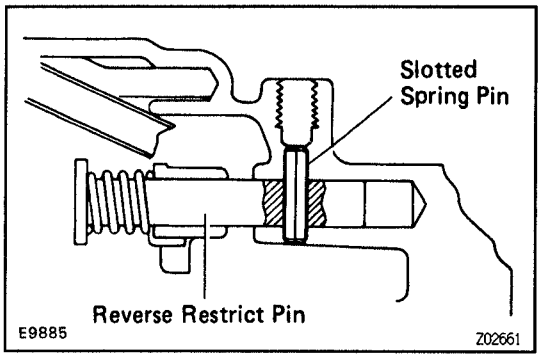

REVERSE RESTRICT PIN REPLACEMENT

MT0B5–03

1. REMOVE REVERSE RESTRICT PIN

(a) Using a hexagon wrench, remove the screw plug.

(b) Using a pin punch and hammer, drive out the slotted spring pin.

(c) Pull off the lever housing and slide out the shaft.

2. INSPECT REVERSE RESTRICT PIN

Turn and push the reverse restrict pin by hand. Check for smooth operation.

3. INSTALL REVERSE RESTRICT PIN

(a) Install the lever housing.

(b) Using a pin punch and hammer, drive in the slotted spring pin, as shown.

(c) Apply sealant to the plug.

Sealant: Part No. 08833 – 00080, THREE BOND 1344, LOCTITE 242 or equivalent

(d) Install and torque the screw plug.

Torque: 25 N·m (250 kgf·cm, 18 ft·lbf)

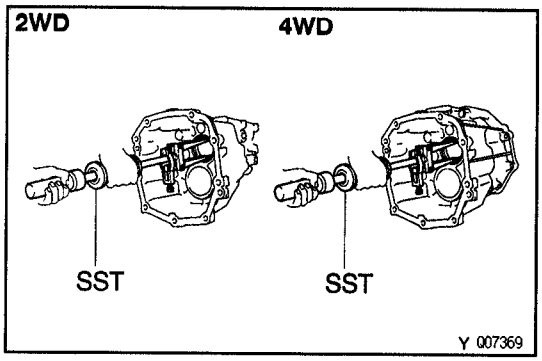

OUTER RACE REPLACEMENT

MT0DL–01

IF NECESSARY, REPLACE REAR BEARING OUTER RACE

(a) Using 2 screwdrivers, remove the snap ring.
(b) Using SST, remove the outer race.
SST 09308–00010

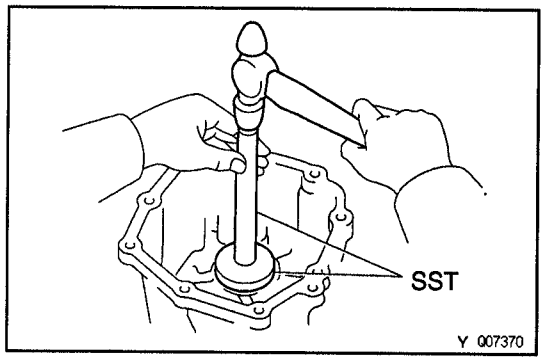

(c) Using SST, install a new outer race.
SST 09950–60010 (09951–00560),
09950–70010 (09951–07150)
(d) Using a screwdriver, install the snap ring.

MT

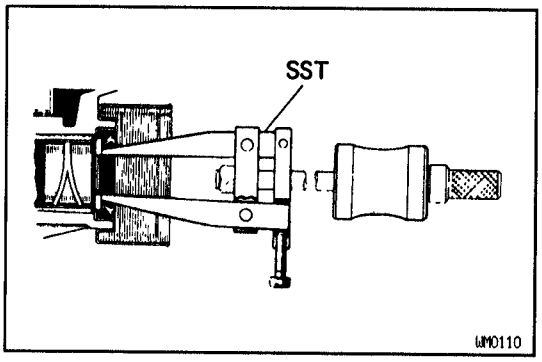

OIL SEAL REPLACEMENT

MT0DM–01

1. 2WD:
IF NECESSARY, REPLACE OIL SEAL

(a) Using SST, remove the oil seal.
SST 09308–00010 or
09308–10010 w/ output shaft installed

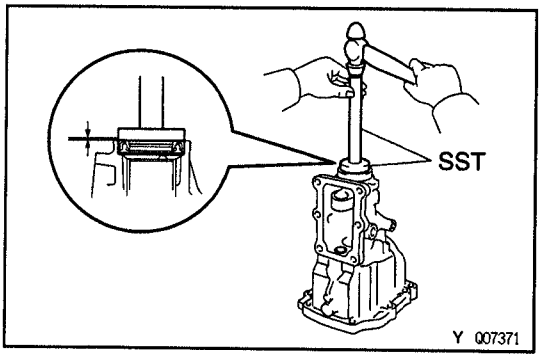

(b) Using SST and a hammer, drive in a new oil seal.
SST 09950–60010 (09951–00560),
09950–70010 (09951–07150)
Drive in depth: 0 ± 0.5 mm (0 ± 0.020 in.)

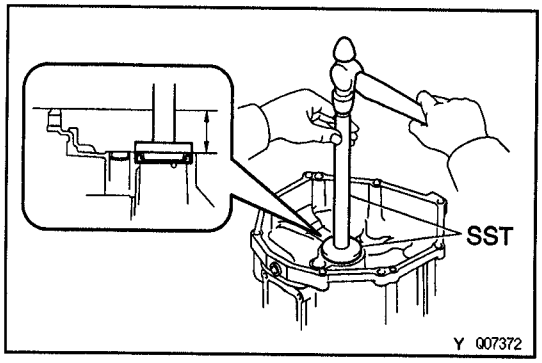

2. 4WD:
IF NECESSARY, REPLACE TRANSFER ADAPTOR OIL SEAL

(a) Using a screwdriver, pry out the oil seal.
(b) Using SST and a hammer, drive in a new oil seal.
SST 09950–60010 (09951–00560),
09950–70010 (09951–07150)
Drive in depth: 45.5 ± 0.5 mm (1.969 ± 0.020 in.)

SERVICE SPECIFICATIONS

SERVICE DATA

MT010-0G

Output shaft 2nd gear journal diameter	Min.	42.975 mm (1.6919 in.)
Output shaft 3rd gear journal diameter	Min.	31.969 mm (1.2586 in.)
Output shaft flange thickness	Min.	5.60 mm (0.2205 in.)
Output shaft runout	Max.	0.06 mm (0.0024 in.)
1st gear inner race flange thickness	Min.	4.78 mm (0.1881 in.)
1st gear inner race outer diameter	Min.	42.975 mm (1.6919 in.)
Counter gear bearing journal diameter	Min.	29.950 mm (1.1791 in.)
Counter 5th gear journal diameter	Min.	26.975 mm (1.0620 in.)
1st, 2nd and 3rd gear thrust clearance	STD	0.10 – 0.25 mm (0.0039 – 0.0098 in.)
	Max.	0.30 mm (0.0118 in.)
Counter 5th gear thrust clearance	STD	0.10 – 0.41 mm (0.0039 – 0.0161 in.)
	Max.	0.46 mm (0.0181 in.)
1st, 2nd and counter 5th gear radial clearance	STD	0.009 – 0.060 mm (0.0004 – 0.0024 in.)
	Max.	0.150 mm (0.0059 in.)
3rd gear radial clearance	STD	0.015 – 0.066 mm (0.0006 – 0.0026 in.)
	Max.	0.200 mm (0.0079 in.)
Reverse idler gear radial clearance	STD	0.041 – 0.074 mm (0.0016 – 0.0029 in.)
	Max.	0.194 mm (0.0076 in.)
Reverse idler gear to shift arm shoe clearance	STD	0.20 – 0.41 mm (0.0080 – 0.0161 in.)
	Max.	0.90 mm (0.0354 in.)
Shift fork to hub sleeve clearance	Max.	1.0 mm (0.039 in.)
Synchronizer ring to 1st and 4th gear clearance	Min.	0.5 mm (0.020 in.)
Synchronizer ring to 2nd and 3rd gear clearance	Min.	0.7 mm (0.028 in.)
Input shaft snap ring thickness		
	Mark 1	2.05 – 2.10 mm (0.0807 – 0.0827 in.)
	Mark 2	2.10 – 2.15 mm (0.0827 – 0.0846 in.)
	Mark 3	2.15 – 2.20 mm (0.0846 – 0.0866 in.)
	Mark 4	2.20 – 2.25 mm (0.0866 – 0.0886 in.)
	Mark 5	2.25 – 2.30 mm (0.0886 – 0.0906 in.)
	Mark 11	2.30 – 2.35 mm (0.0906 – 0.0925 in.)
	Mark 12	2.35 – 2.40 mm (0.0925 – 0.0945 in.)
Output shaft snap ring thickness		
No.2 clutch hub	Mark C–1	1.75 – 1.80 mm (0.0689 – 0.0709 in.)
	Mark D	1.80 – 1.85 mm (0.0709 – 0.0728 in.)
	Mark 11	1.86 – 1.91 mm (0.0732 – 0.0752 in.)
	Mark 12	1.92 – 1.97 mm (0.0756 – 0.0776 in.)
	Mark 13	1.98 – 2.03 mm (0.0780 – 0.0799 in.)
	Mark 14	2.04 – 2.09 mm (0.0803 – 0.0823 in.)
	Mark 15	2.10 – 2.15 mm (0.0827 – 0.0846 in.)

MT

Output shaft snap ring thickness		
Rear bearing	Mark 8	2.31 – 2.36 mm (0.0909 – 0.0929 in.)
	Mark 9	2.37 – 2.42 mm (0.0933 – 0.0953 in.)
	Mark 10	2.43 – 2.48 mm (0.0957 – 0.0976 in.)
	Mark 11	2.49 – 2.54 mm (0.0980 – 0.1000 in.)
	Mark 12	2.55 – 2.60 mm (0.1004 – 0.1024 in.)
	Mark 13	2.61 – 2.66 mm (0.1028 – 0.1047 in.)
	Mark 14	2.68 – 2.73 mm (0.1055 – 0.1075 in.)
	Mark 15	2.74 – 2.79 mm (0.1079 – 0.1098 in.)
Output shaft snap ring thickness		
Reverse gear	Mark 5	2.25 – 2.30 mm (0.0886 – 0.0906 in.)
	Mark 11	2.30 – 2.35 mm (0.0906 – 0.0925 in.)
	Mark 12	2.35 – 2.40 mm (0.0925 – 0.0945 in.)
	Mark 13	2.40 – 2.45 mm (0.0945 – 0.0965 in.)
	Mark 14	2.45 – 2.50 mm (0.0965 – 0.0984 in.)
	Mark 15	2.50 – 2.55 mm (0.0984 – 0.1004 in.)
	Mark 16	2.55 – 2.60 mm (0.1004 – 0.1024 in.)
	Mark 17	2.61 – 2.66 mm (0.1028 – 0.1047 in.)
	Mark 18	2.67 – 2.72 mm (0.1051 – 0.1071 in.)
	Mark 19	2.73 – 2.78 mm (0.1075 – 0.1094 in.)
	Mark 20	2.79 – 2.84 mm (0.1098 – 0.1118 in.)
	Mark 21	2.85 – 2.90 mm (0.1122 – 0.1142 in.)
	Mark 22	2.91 – 2.96 mm (0.1146 – 0.1165 in.)
	Mark 23	2.97 – 3.02 mm (0.1169 – 0.1189 in.)
Coutner gear snap ring thickness		
Front bearing	Mark A	2.05 – 2.10 mm (0.0807 – 0.0827 in.)
	Mark B	2.10 – 2.15 mm (0.0827 – 0.0846 in.)
	Mark C	2.15 – 2.20 mm (0.0846 – 0.0866 in.)
	Mark D	2.20 – 2.25 mm (0.0866 – 0.0886 in.)
	Mark E	2.25 – 2.30 mm (0.0886 – 0.0906 in.)
	Mark F	2.30 – 2.35 mm (0.0906 – 0.0925 in.)
Counter gear snap ring thickness		
No.3 clutch hub	Mark 2	2.06 – 2.11 mm (0.0811 – 0.0831 in.)
	Mark 3	2.12 – 2.17 mm (0.0835 – 0.0854 in.)
	Mark 4	2.18 – 2.23 mm (0.0858 – 0.0878 in.)
	Mark 5	2.24 – 2.29 mm (0.0882 – 0.0902 in.)
Counter gear snap ring thickness		
Rear bearing	Mark 1	1.90 – 1.95 mm (0.0748 – 0.0768 in.)
	Mark 2	1.96 – 2.01 mm (0.0772 – 0.0791 in.)
	Mark 3	2.02 – 2.07 mm (0.0795 – 0.0815 in.)
	Mark 4	2.08 – 2.13 mm (0.0819 – 0.0839 in.)
	Mark 5	2.14 – 2.19 mm (0.0843 – 0.0862 in.)
	Mark 6	2.20 – 2.25 mm (0.0866 – 0.0886 in.)
	Mark 7	2.26 – 2.31 mm (0.0890 – 0.0909 in.)

Oil seal drive in depth	
Speedometer drive gear	25 mm (0.98 in.)
Front bearing retainer (from retainer end)	12.2 ± 0.5 mm (0.480 ± 0.020 in.)
Extension housing	0 ± 0.5 mm (0 ± 0.020 in.)
Transfer adaptor	45.5 ± 0.5 mm (1.969 ± 0.020 in.)

MT011-0G

TORQUE SPECIFICATIONS

Part tightened	N·m	kgf·cm	ft·lbf
Transmission x Engine	72	730	53
Transmission x Starter	39	400	29
Stiffener plate x Engine	37	380	27
Stiffener plate x Rear end plate	37	380	27
Rear end plate x Transmission	37	380	27
Front exhaust pipe x Exhaust manifold	62	630	46
Front exhaust pipe x TWC	48	490	35
Front exhaust pipe bracket set bolt	71	720	52
Engine rear mounting x Crossmember	19	190	14
Engine rear mounting x Transmission	65	660	48
Crossmember x Frame	65	660	48
Transmission x Transfer	24	240	17
Clutch release cylinder x Transmission	12	120	9
Shift fork set bolt	20	200	14
Straight screw plug	25	250	18
Reverse idler gear shaft stopper bolt	25	250	18
Oil separator x Intermediate plate	18	185	13
Front bearing retainer set bolt	25	250	18
Extension housing x Intermediate plate	37	380	27
Transfer adaptor x Intermediate plate	37	380	27
Restrict pin (2WD)	40	410	30
(4WD)	27	280	20
Shift lever housing x Shift and select lever shaft	39	400	29
Control shift lever retainer x Extension housing	18	185	13
Control shift lever retainer x Transfer adaptor	18	185	13
Drain and filler plugs	37	380	27
Back–up light switch	40	410	30
Clutch housing x Transmission case	37	380	27
Rear bearing retainer x Intermediate plate	18	185	13
Speedometer driven gear set bolt (2WD)	13	130	9

R150, R150F MANUAL TRANSMISSION

PRECAUTION ..... MT– 2
PREPARATION ..... MT– 2
TROUBLESHOOTING ..... MT– 5
ASSEMBLY REMOVAL AND INSTALLATION ..... MT– 6
(2WD) ..... MT– 6
ASSEMBLY REMOVAL AND INSTALLATION ..... MT– 8
(4WD) ..... MT– 8
COMPONENT PARTS REMOVAL ..... MT– 11
INPUT SHAFT ..... MT– 19
OUTPUT SHAFT ..... MT– 21
COUNTER GEAR AND REVERSE IDLER GEAR ..... MT– 28
FRONT BEARING RETAINER ..... MT– 32
EXTENSION HOUSING AND TRANSFER ADAPTOR ..... MT– 33
SERVICE SPECIFICATIONS ..... MT– 35

PRECAUTION

MX022-0T

When working with FIPG material, you must observe the following.

- **Using a razor blade and gasket scraper, remove all the old FIPG material from the gasket surfaces.**
- **Thoroughly clean all components to remove all the loose material.**
- **Clean both sealing surfaces with a non–residue solvent.**
- **Apply the FIPG in an approx. 1 mm (0.04 in.) wide bead along the sealing surface.**
- **Parts must be assembled within 10 minutes of application. Otherwise, the FIPG material must be removed and reapplied.**

PREPARATION

SST (SPECIAL SERVICE TOOLS)

MT012-0Q

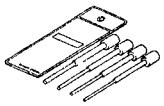	09201–10000	Valve Guide Bushing Remover & Replacer Set	2WD: Speedometer driven gear oil seal
	(09201–01080)	Valve Guide Bushing Remover & Replacer 8	
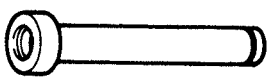	09309–35010	Transmission Rear Bearing Replacer	2WD: Output shaft rear bearing Output shaft center bearing
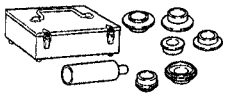	09316–60011	Transmission & Transfer Bearing Replacer	
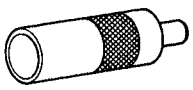	(09316–00011)	Replacer Pipe	Output shaft rear bearing Gear spline piece No.5
	(09316–00031)	Replacer "B"	5th gear
	(09316–00071)	Replacer "F"	4WD: Output shaft rear bearing Output shaft center bearing
	09506–35010	Differential Drive Pinion Rear Bearing Replacer	Input shaft bearing
	09921–00010	Spring Tension Tool	2WD: Speedometer driven gear oil seal
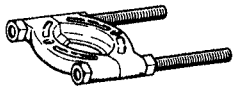	09950–00020	Bearing Remover	

	09950–40010 Puller B Set	Output shaft rear bearing
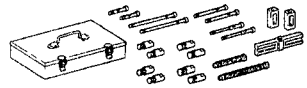	09950–50010 Puller C Set	Gear spline piece No.5
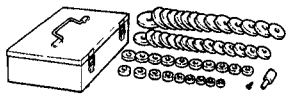	09950–60010 Replacer Set	
	(09951–00510) Replacer 51	Front bearing retainer oil seal
	(09951–00570) Replacer 57	Extension housing oil seal Transfer adaptor oil seal
	(09951–00620) Replacer 62	Counter rear bearing
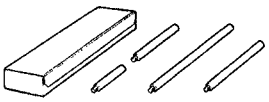	09950–70010 Handle Set	
	(09951–07150) Handle 150	

MT013–0F

RECOMMENDED TOOLS

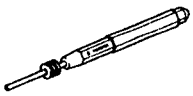	09031–00030 Pin Punch .	
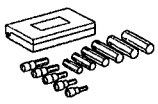	09040–00010 Hexagon Wrench Set .	
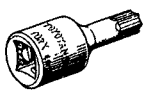	09042–00020 Torx Socket T40 .	
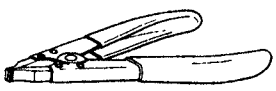	09905–00012 Snap Ring No.1 Expander .	

MT

MX027-0T

EQUIPMENT

Dial indicator	
Calipers	
Micrometer	
Torque wrench	
Feeler gauge	
Magnetic finger	

MX028-1S

LUBRICANT

Item		Capacity	Classification
Manual transmission oil	2WD:	2.6 liters (2.7 US qts, 2.3 Imp. qts)	API GL—4 or GL—5
	4WD:	2.2 liters (2.3 US qts, 1.9 Imp. qts)	SAE 75W—90

MX029-0Q

SSM (SPECIAL SERVICE MATERIALS)

08826—00090	Seal Packing 1281, THREE BOND 1281 or equivalent (FIPG)	Intermediate plate x Transmission case Front bearing retainer x Transmission case
08833—00080	Adhesive 1344, THREE BOND 1344, LOCTITE 242 or equivalent	Straight screw plug Shift lever housing set bolt Front bearing retainer set bolt

MT

TROUBLESHOOTING

MX02A–0R

Use the table below to help you find the cause of the problem. The numbers indicate the priority of the likely cause of the problem. Check each part in order. If necessary, replace these parts.

See Page / Parts Name / Trouble	–	MT-4	–	MT-11	MT-11	MT-33	–	MT-11	MT-11	MT-11	MT-11	MT-19, 21, 28	MT-21, 28			
	Oil (Level low)	Oil (Wrong)	Oil (Level too high)	Gasket (Damaged)	Oil seal (Worn or damaged)	O-Ring (Worn or damaged)	Control cable (Faulty)	Locking ball spring (Damaged)	Shift fork (Worn)	Gear (Worn or damaged)	Bearing (Worn or damaged)	Synchronizer ring (Worn or damaged)	Shifting key spring (Damaged)			
Noise	1	2								3	3					
Oil leakage			1	2	2	3										
Hard to shift or will not shift							1					2	3			
Jumps out of gear								1	2	3	3					

V00310

MT

ASSEMBLY REMOVAL AND INSTALLATION (2WD)

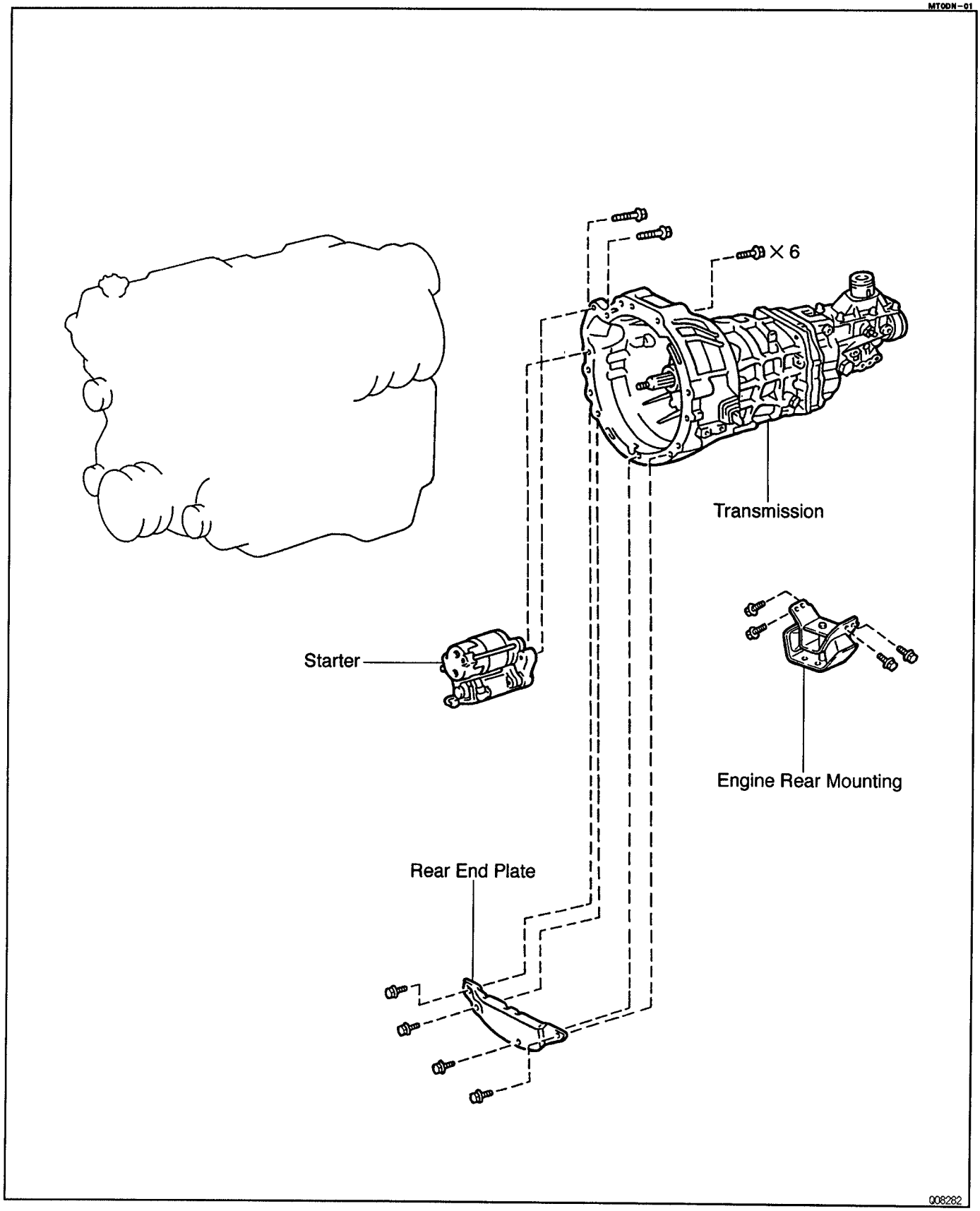

MT

MT0B8–04

TRANSMISSION REMOVAL

1. **REMOVE TRANSMISSION WITH ENGINE**
   (See page EG–60)
2. **REMOVE REAR END PLATE**
   Remove the 4 bolts and plate.
   Torque: 18 N·m (185 kgf·cm, 13 ft·lbf)
3. **REMOVE STARTER**
   Remove the 2 bolts and starter.
   Torque: 39 N·m (400 kgf·cm, 29 ft·lbf)
4. **REMOVE TRANSMISSION FROM ENGINE**

(a) Remove the 6 transmission mounting bolts from the engine.
Torque: 72 N·m (730 kgf·cm, 53 ft·lbf)

(b) Pull out the transmission toward the rear.

5. **REMOVE ENGINE REAR MOUNTING**
   Remove the 4 bolts and engine rear mounting.
   Torque: 65 N·m (660 kgf·cm, 48 ft·lbf)

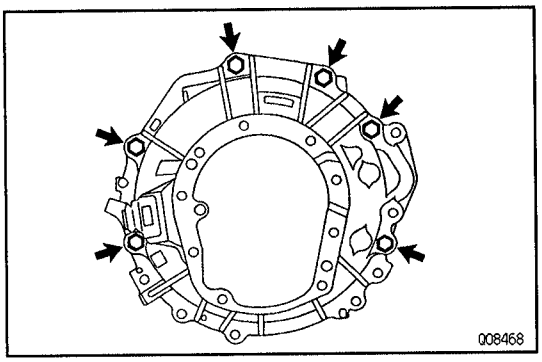

MT0DP–01

TRANSMISSION INSTALLATION

MT

Installation is in the reverse order of removal.
HINT: After installation, road test the vehicle.

ASSEMBLY REMOVAL AND INSTALLATION (4WD)

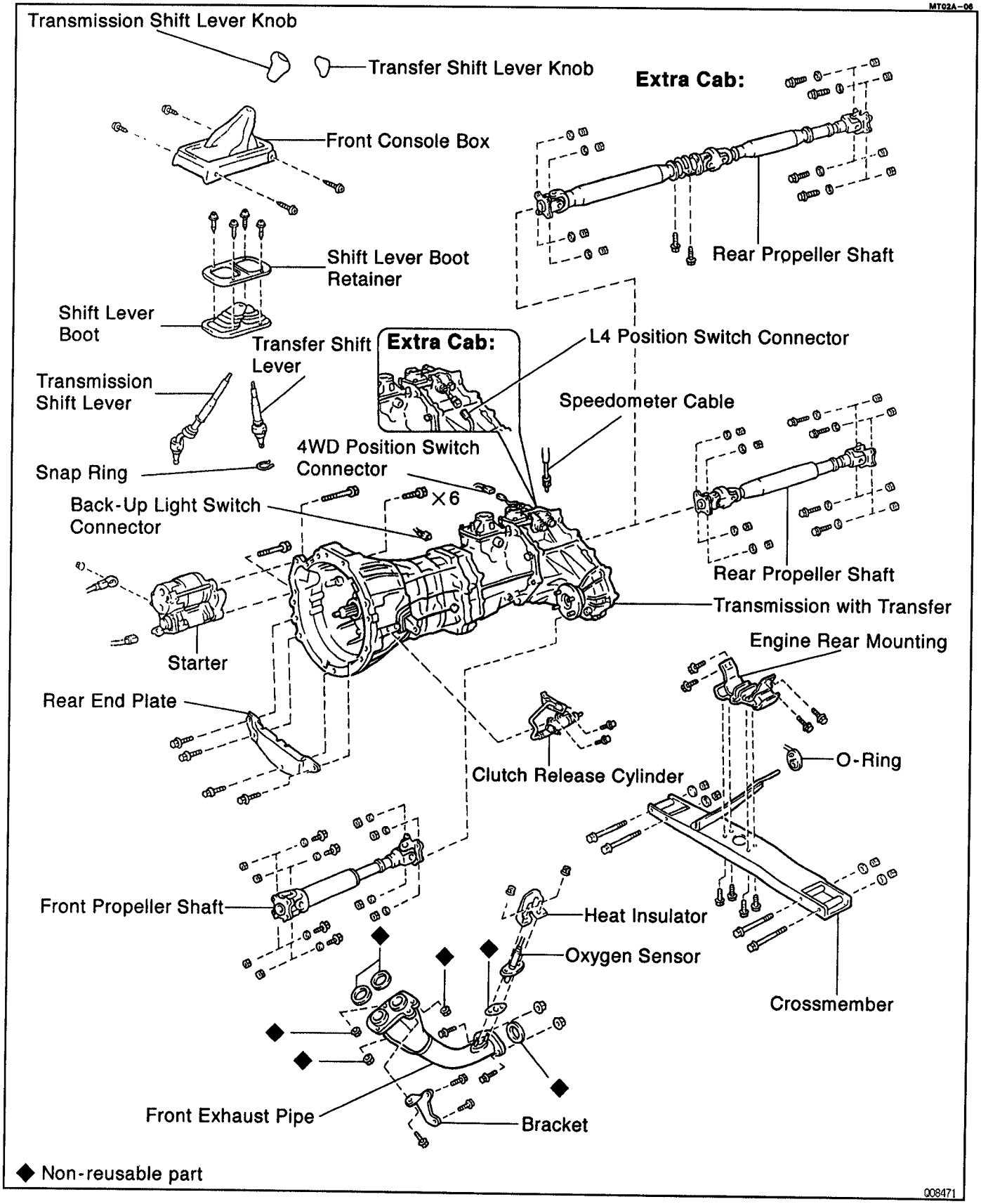

MT0BG-02

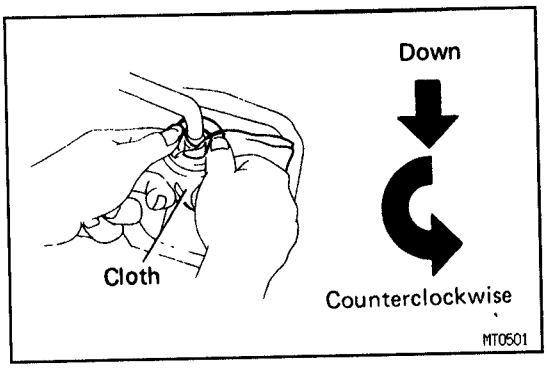

TRANSMISSION REMOVAL

1. REMOVE TRANSMISSION SHIFT LEVER

(a) Remove the 4 screws and front console box.

(b) Remove the 4 screws and shift lever boot and retainer.

(c) Cover the shift lever cap with a cloth.

(d) Pressing down on the shift lever cap and rotate it counterclockwise to remove.

(e) Pull out the shift lever.
INSTALLATION HINT: Apply MP grease to the tip of shift lever.

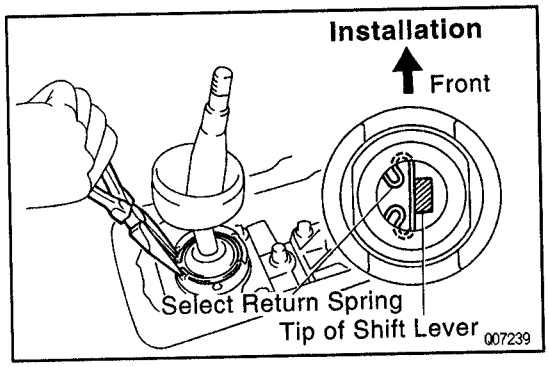

2. REMOVE TRANSFER SHIFT LEVER
Using pliers, remove the snap ring and pull out the shift lever.
INSTALLATION HINT: Apply MP grease to the tip of shift lever.

3. RAISE VEHICLE AND DRAIN TRANSMISSION OIL
Oil grade: API GL–4 or GL–5
Viscosity: SAE 75W–90
Capacity: 2.2 liters (2.3 US qts, 1.9 Imp. qts)

4. DISCONNECT FRONT PROPELLER SHAFT
(See page PR–6)

5. DISCONNECT REAR PROPELLER SHAFT
(See page PR–6)

6. DISCONNECT SPEEDOMETER CABLE

7. DISCONNECT BACK–UP LIGHT SWITCH SWITCH CONNECTOR

8. STANDARD CAB:
DISCONNECT 4WD POSITION SWITCH CONNECTOR

9. EXTRA CAB:
DISCONNECT L4 POSITION SWITCH CONNECTOR

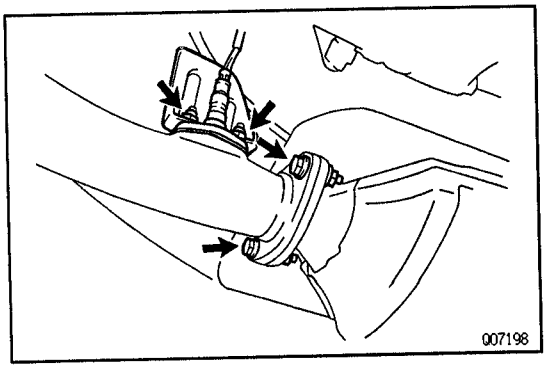

10. REMOVE CLUTCH RELEASE CYLINDER
Remove the 2 bolts and release cylinder.
Torque: 12 N·m (120 kgf·cm, 9 ft·lbf)

11. REMOVE FRONT EXHAUST PIPE

(a) Remove the 2 nuts, gasket, oxygen sensor and insulator.

(b) Remove the 2 bolts, nuts and gasket.
Torque: 48 N·m (490 kgf·cm, 35 ft·lbf)

MT

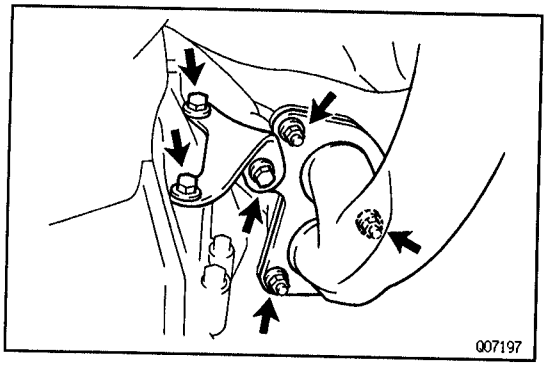

(c) Remove the 3 bolts and bracket.
Torque: 44 N·m (450 kgf·cm, 33 ft·lbf)

(d) Remove the 3 nuts, front exhaust pipe and 2 gaskets.
Torque: 62 N·m (630 kgf·cm, 46 ft·lbf)

12. REMOVE STARTER

(a) Disconnect the connector and wire from the starter.

(b) Remove the 2 bolts and starter.
Torque: 39 N·m (400 kgf·cm, 29 ft·lbf)

13. REMOVE REAR END PLATE

Remove the 4 bolts and rear end plate.
Torque: 18 N·m (185 kgf·cm, 13 ft·lbf)

14. REMOVE CROSSMEMBER

(a) Support the transmission rear side.

(b) Remove the 4 bolts from the engine rear mounting.
Torque: 19 N·m (190 kgf·cm, 14 ft·lbf)

(c) Disconnect the O–ring and remove the 4 bolts, nuts and crossmember.
Torque: 65 N·m (660 kgf·cm, 48 ft·lbf)

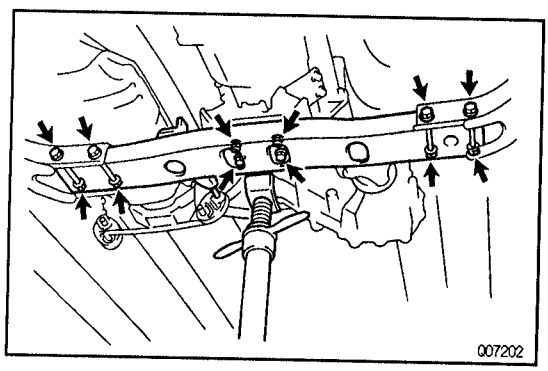

15. REMOVE ENGINE REAR MOUNTING

Remove the 4 bolts and engine rear mounting.
Torque: 65 N·m (660 kgf·cm, 48 ft·lbf)

16. JACK UP TRANSMISSION SLIGHTLY

Using a transmission jack, support the transmission.

17. REMOVE TRANSMISSION

(a) Remove the 6 transmission mounting bolts from the engine.
Torque: 72 N·m (730 kgf·cm, 53 ft·lbf)

(b) Disconnect the 3 wire clamps from the transmission.

(c) Pull out the transmission down and toward the rear.

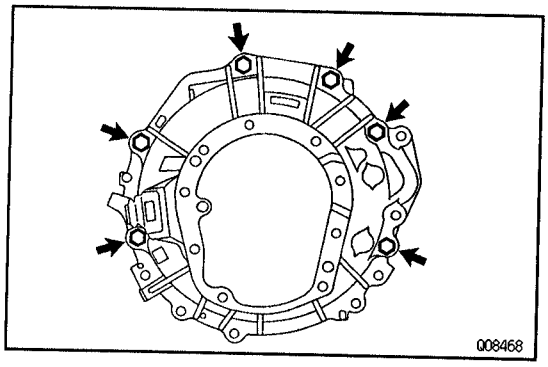

18. REMOVE TRANSFER FROM TRANSMISSION

(a) Remove the transfer adaptor rear mounting bolts.
Torque: 24 N·m (240 kgf·cm, 17 ft·lbf)

(b) Pull the transfer straight up and remove it from the transmission.
HINT: Take care not to damage the adaptor rear oil seal with the transfer input gear spline.
INSTALLATION HINT:
(See page TR–6)

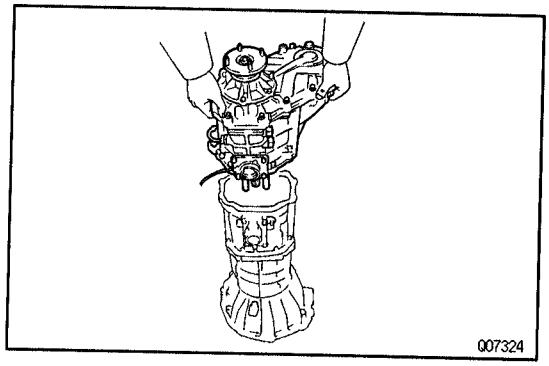

TRANSMISSION INSTALLATION

MT0DQ–01

Installation is in the reverse order of removal.
HINT: After installation, road test the vehicle.

COMPONENT PARTS REMOVAL

MT02D–09

COMPONENTS

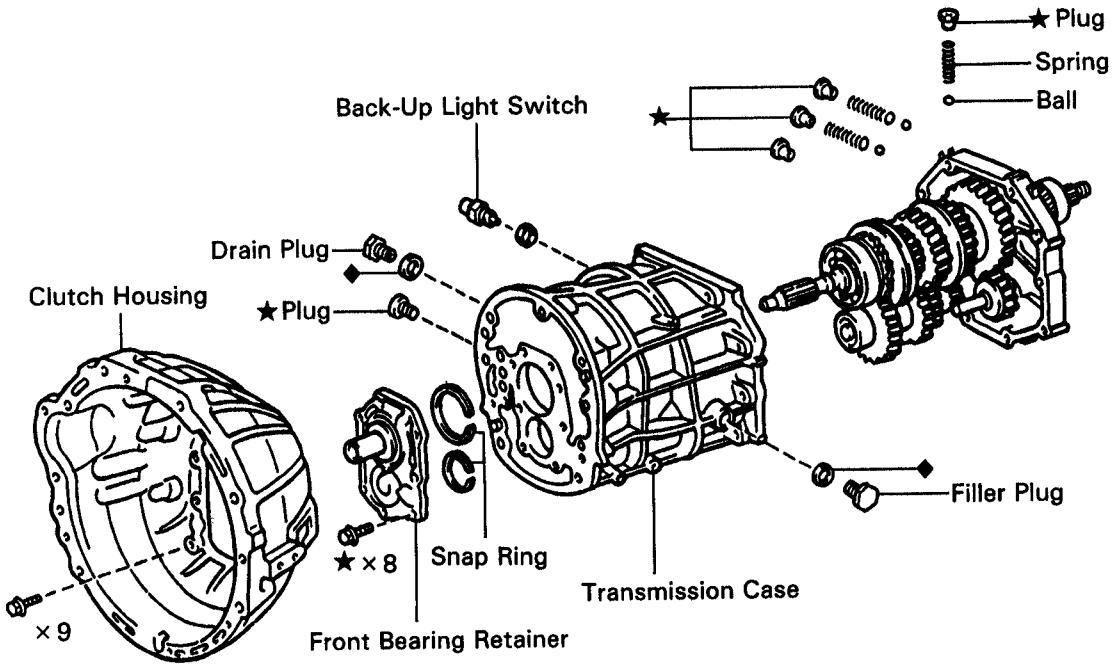

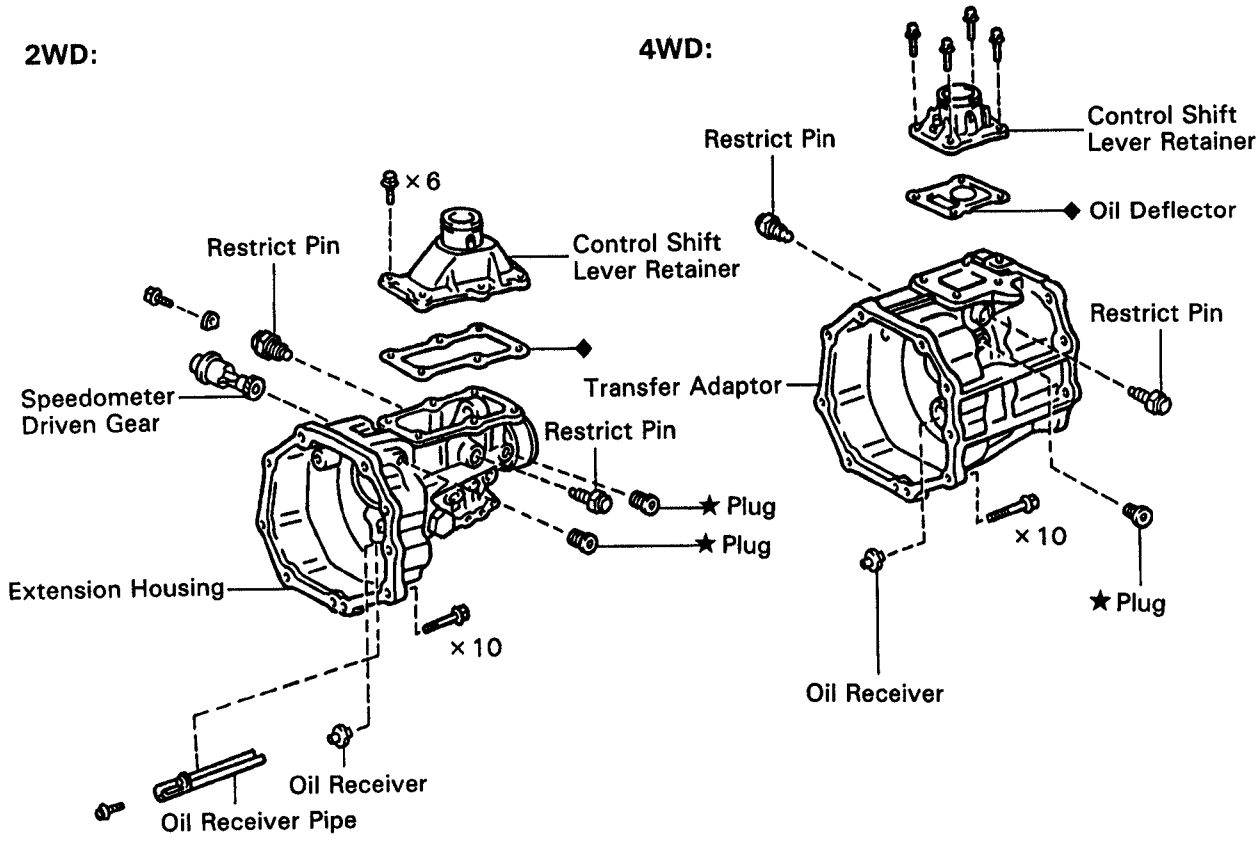

◆ Non-reusable part

★ Precoated part

Q07458

Z15993

MT

R150, R150F MANUAL TRANSMISSION — COMPONENT PARTS REMOVAL

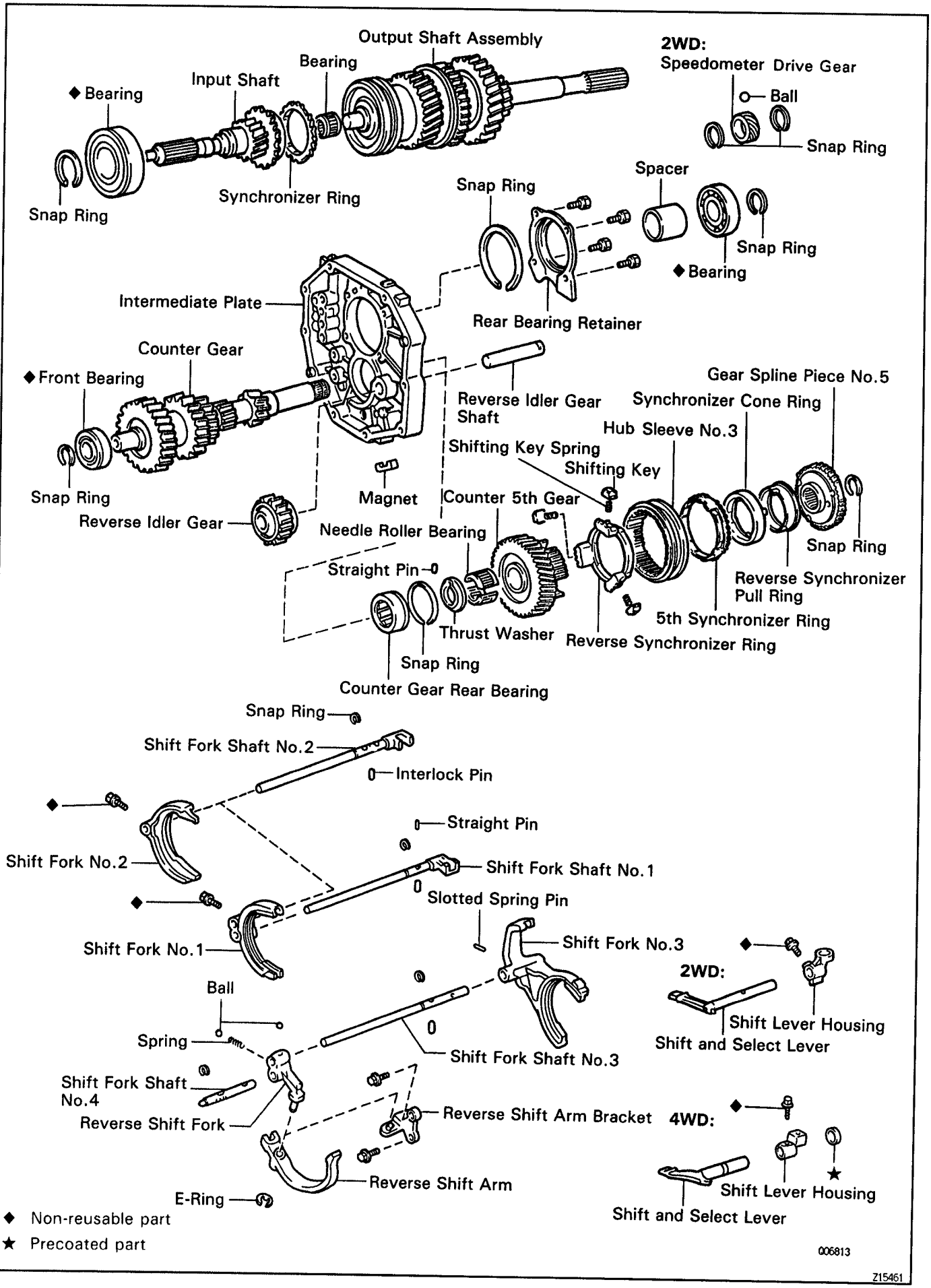

MT

MT08A-04

BASIC SUBASSEMBLY SEPARATION

1. **REMOVE BACK–UP LIGHT SWITCH**
   Torque: 44 N·m (450 kgf·cm, 32 ft·lbf)
2. **2WD:**
   REMOVE SPEEDOMETER DRIVEN GEAR
   Remove the driven gear lock plate set bolt and driven gear.
   Torque: 11 N·m (115 kgf·cm, 8 ft·lbf)
3. **REMOVE CLUTCH HOUSING FROM TRANSMISSION CASE**
   Remove the 9 bolts and clutch housing from the transmission case.
   Torque: 36 N·m (370 kgf·cm, 27 ft·lbf)
4. **REMOVE CONTROL SHIFT LEVER RETAINER**
   (a) Remove the 6 (2WD) or 4 (4WD) bolts.
   Torque: 18 N·m (185 kgf·cm, 13 ft·lbf)
   (b) Remove the retainer and gasket (2WD) or oil deflector (4WD).
5. **REMOVE 2 RESTRICT PINS**
   Torque: 37 N·m (380 kgf·cm, 27 ft·lbf)
6. **2WD:**
   REMOVE EXTENSION HOUSING
   (a) Remove the shift lever housing set bolt.
   Torque: 38 N·m (390 kgf·cm, 28 ft·lbf)
   (b) Remove the 10 bolts.
   Torque: 37 N·m (380 kgf·cm, 27 ft·lbf)
   (c) Using a plastic hammer, tap the extension housing, remove the shift lever housing and shift and select lever.
   FIPG: Part No.08826–00090, THREE BOND 1281 or equivalent
7. **4WD:**
   REMOVE TRANSFER ADAPTOR
   (a) Remove the shift lever housing set bolt.
   Torque: 38 N·m (390 kgf·cm, 28 ft·lbf)
   (b) Remove the 10 bolts.
   Torque: 37 N·m (380 kgf·cm, 27 ft·lbf)
   (c) Using a plastic hammer, tap the transfer adaptor, remove the shift lever housing and shift and select lever.
   FIPG: Part No.08826–00090, THREE BOND 1281 or equivalent

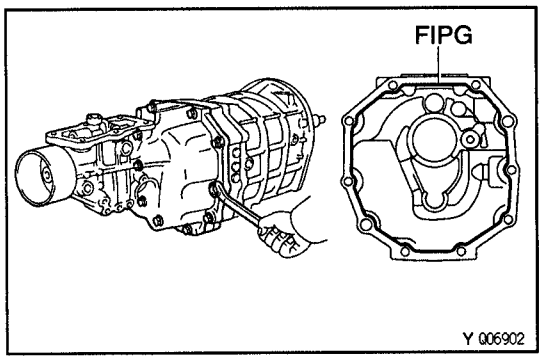

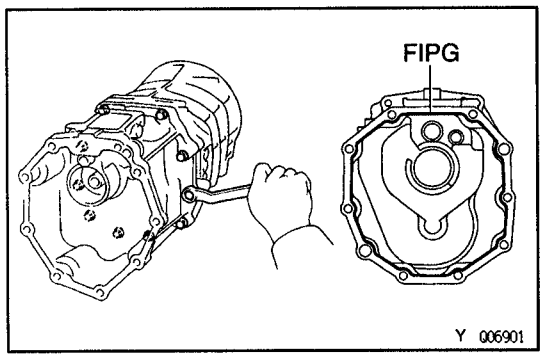

MT

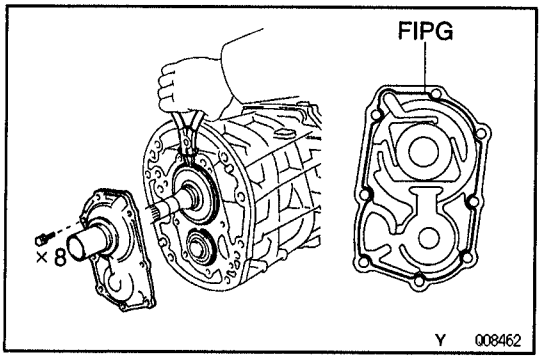

8. REMOVE FRONT BEARING RETAINER

(a) Remove the 8 bolts.

Sealant: Part No.08833–000080, THREE BOND 1344, LOCTITE 242 or equivalent

Torque: 17 N·m (170 kgf·cm, 12 ft·lbf)

(b) Using a plastic hammer, tap the front bearing retainer.

FIPG: Part No.08826–00090, THREE BOND 1281 or equivalent

9. REMOVE BEARING SNAP RING

Using a snap ring expander, remove the 2 snap rings.

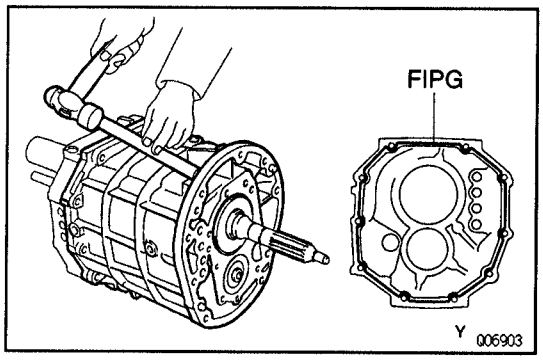

10. SEPARATE INTERMEDIATE PLATE FROM TRANSMISSION CASE

(a) Using a brass bar and hammer, carefully tap the transmission case.

(b) Remove the transmission case from the intermediate plate.

INSTALLATION HINT: Align the each bearing outer race, each fork shaft end and reverse idler gear shaft end with the case installation holes.

FIPG: Part No.08826–00090, THREE BOND 1281 or equivalent

MT

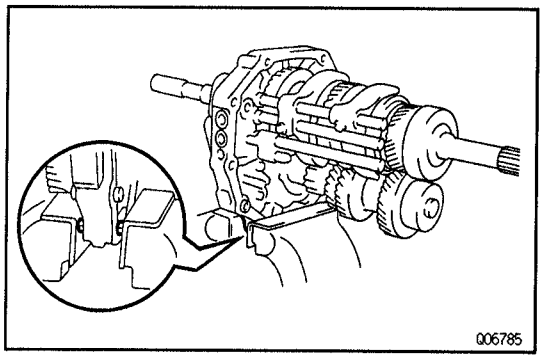

11. REMOVE MAGNET FROM INTERMEDIATE PLATE

12. MOUNT INTERMEDIATE PLATE IN VISE

(a) Use the 2 clutch housing bolts, plate washers and suitable nuts, as shown.

INSTALLATION NOTICE: Increase or decrease plate washers so that the bolt tip does not protrude from the nut.

(b) Mount the intermediate plate in a vise.

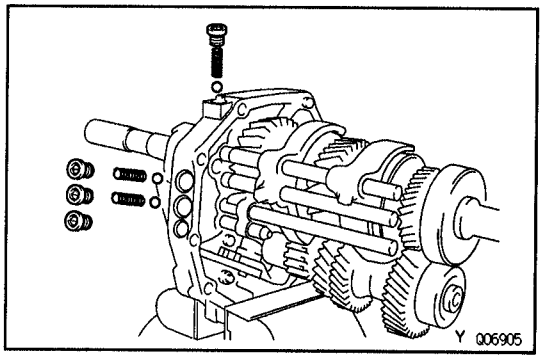

13. REMOVE STRAIGHT SCREW PLUG, LOCKING BALL AND SPRING

(a) Using a hexagon wrench, remove the 4 plugs.

Sealant: Part No. 08833 – 00080, THREE BOND 1344, LOCTITE 242 or equivalent

Torque: 19 N·m (190 kgf·cm, 14 ft·lbf)

(b) Using a magnetic finger, remove the 3 springs and balls.

14. REMOVE SHIFT FORK SET BOLT

Remove the 2 bolts from the shift fork No.1 and No.2.

Torque: 20 N·m (200 kgf·cm, 14 ft·lbf)

15. REMOVE SLOTTED SPRING PIN

Using a pin punch and hammer, drive out the pin from the shift fork No.3.

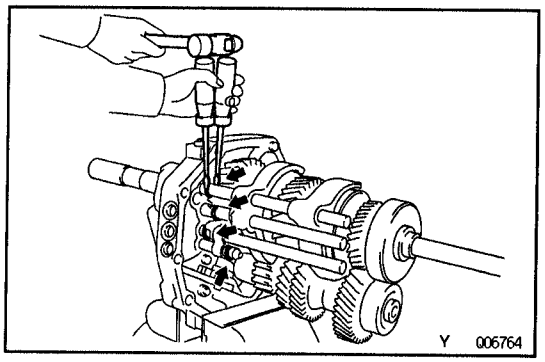

16. REMOVE SNAP RING

Using 2 screwdrivers and a hammer, tap out the 4 snap rings from each shift fork shaft.

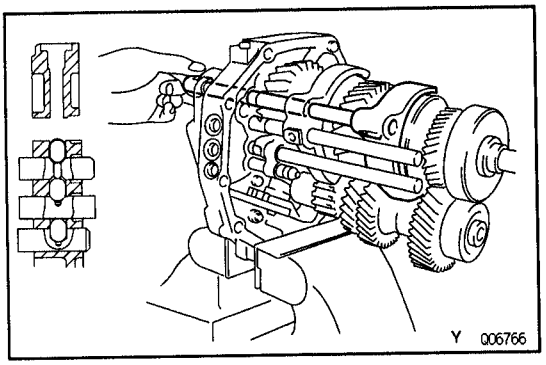

17. REMOVE SHIFT FORK SHAFT NO.2 AND SHIFT FORK NO.2

(a) Pull out the shift fork shaft No.2 from the shift fork No.1, No.2 and intermediate plate.

(b) Remove the shift fork No.2 from the groove of hub sleeve No.2.

(c) Using a magnetic finger, remove the interlock pin from the intermediate plate.

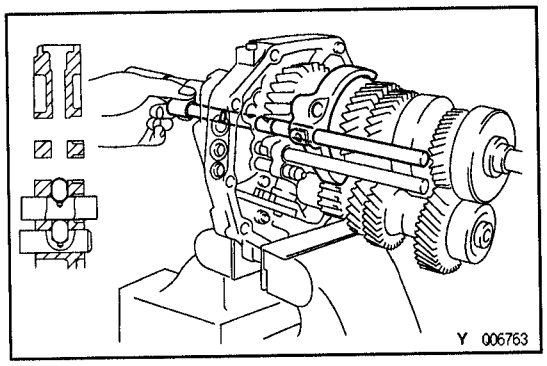

18. REMOVE SHIFT FORK SHAFT NO.1 AND SHIFT FORK NO.1

(a) Pull out the shift fork shaft No.1 with the straight pin from the shift fork No.1 and intermediate plate.

(b) Remove the shift fork No.1 from the groove of reverse gear.

(c) Using a magnetic finger, remove the interlock pin from the intermediate plate.

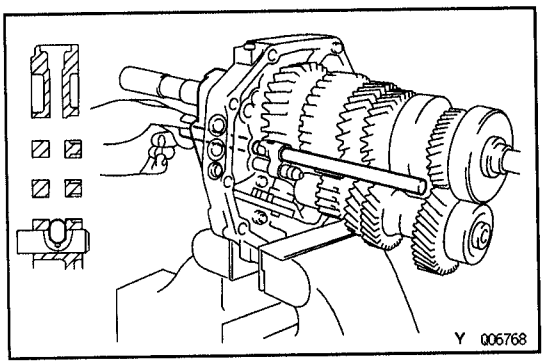

19. REMOVE SHIFT FORK SHAFT NO.3 AND SHIFT FORK NO.3

(a) Pull out the shift fork shaft No.3 from the shift fork No.3, reverse shift fork and intermediate plate.

(b) Remove the shift fork No.3 from the groove of hub sleeve No.3.

(c) Using a magnetic finger, remove the interlock pin from the intermediate plate.

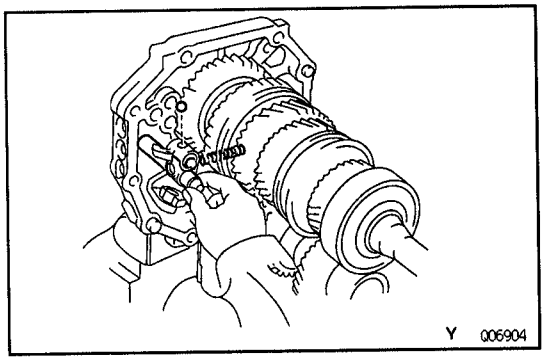

20. REMOVE SHIFT FORK SHAFT NO.4

(a) Using a magnetic finger, remove the ball.

(b) Pull out the shift fork shaft No.4 from the reverse shift fork and intermediate plate.

REMOVAL NOTICE: Take care of the ball in the reverse shift fork. It will spring out when you pull out the shift fork shaft No.4.

(c) Using a magnetic finger, remove the spring from the reverse shift fork.

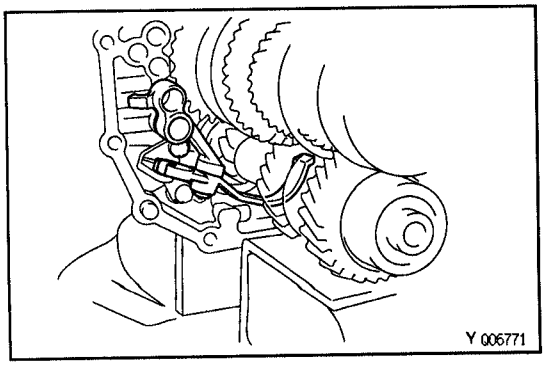

21. REMOVE REVERSE SHIFT FORK AND ARM

(a) Remove the reverse shift fork and arm.

INSTALLATION HINT: Align the reverse shift arm to the pivot of the reverse shift arm bracket.

(b) Using a screwdriver, remove the E–ring.

(c) Separate the reverse shift fork and arm.

22. REMOVE REVERSE SHIFT ARM BRACKET

Remove the 2 bolts and the reverse shift arm bracket.

Torque: 18 N·m (185 kgf·cm, 13 ft·lbf)

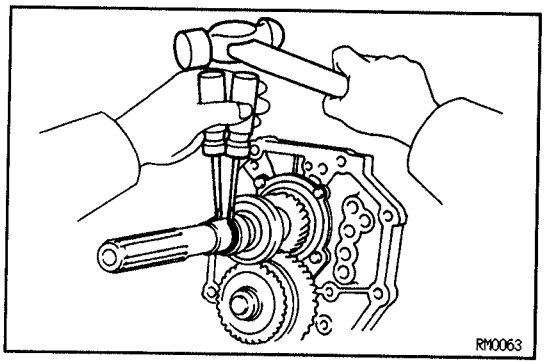

23. 2WD:
REMOVE SPEEDOMETER DRIVE GEAR

(a) Using 2 screwdrivers and a hammer, tap out the rear snap ring, and remove the drive gear and ball.

(b) Using 2 screwdrivers and a hammer, tap out the front snap ring, and remove the drive gear.

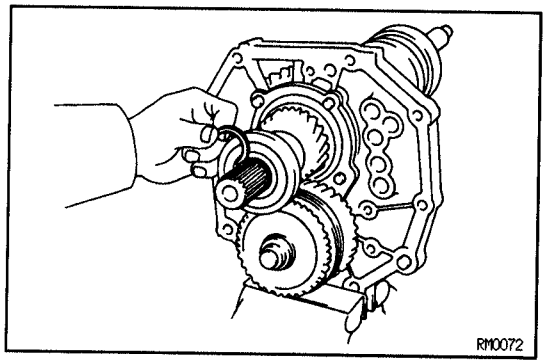

24. REMOVE OUTPUT SHAFT REAR BEARING

(a) Using 2 screwdrivers and a hammer, tap out the snap ring.

INSTALLATION HINT: Select a snap ring that will allow minimum axial play.

Mark	Thickness mm (in.)
A	2.65 – 2.70 (0.1043 – 0.1063)
B	2.70 – 2.75 (0.1063 – 0.1083)
C	2.75 – 2.80 (0.1083 – 0.1102)
D	2.80 – 2.85 (0.1102 – 0.1122)
E	2.85 – 2.90 (0.1122 – 0.1142)
F	2.90 – 2.95 (0.1142 – 0.1161)
G	2.95 – 3.00 (0.1161 – 0.1181)
H	3.00 – 3.05 (0.1181 – 0.1201)
J	3.05 – 3.10 (0.1201 – 0.1220)
K	3.10 – 3.15 (0.1220 – 0.1240)
L	3.15 – 3.20 (0.1240 – 0.1260)
M	3.20 – 3.25 (0.1260 – 0.1280)
N	3.25 – 3.30 (0.1280 – 0.1299)
P	3.30 – 3.35 (0.1299 – 0.1319)
Q	3.35 – 3.40 (0.1319 – 0.1339)
R	3.40 – 3.45 (0.1339 – 0.1358)
S	3.45 – 3.50 (0.1358 – 0.1378)

(b) Using SST, remove the rear bearing.
SST 09950–40010

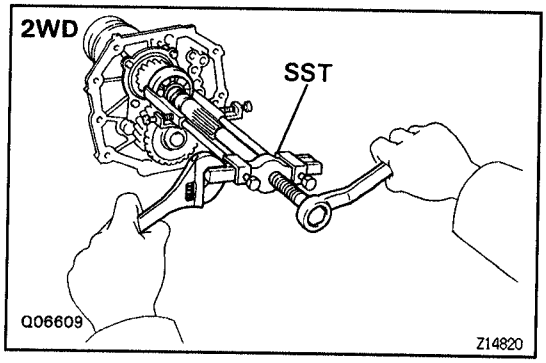

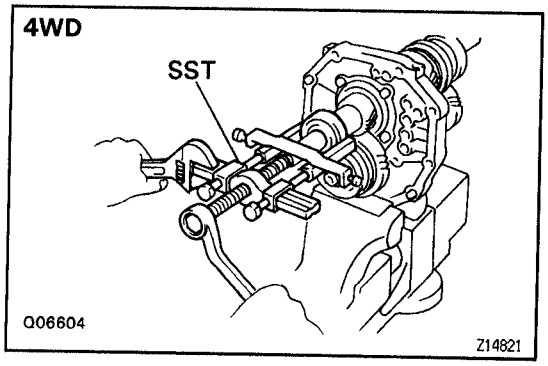

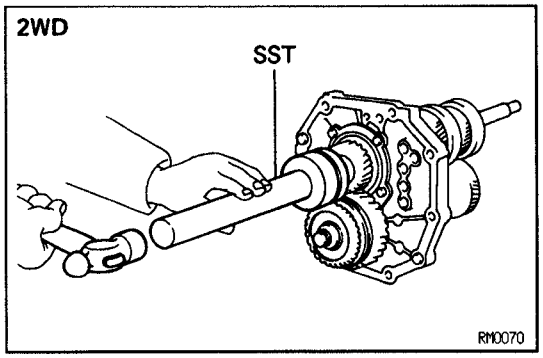

INSTALLATION HINT: Using SST and a hammer, drive in a new bearing.
2WD:
SST 09309–35010

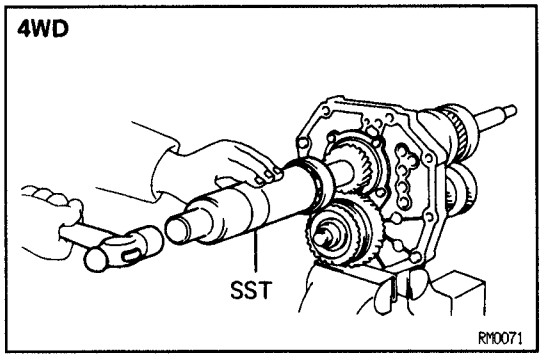

4WD:
SST 09316–60011
(09316–00011, 09316–00071)

25. REMOVE SPACER

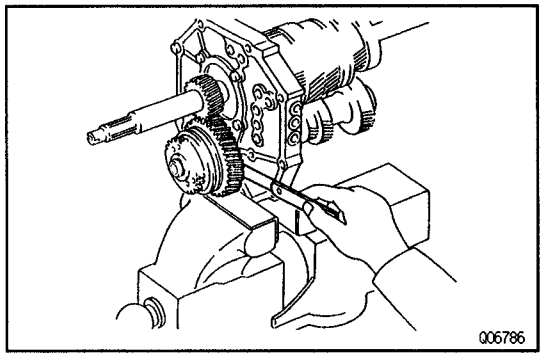

26. INSPECT COUNTER 5TH GEAR THRUST CLEARANCE

Using a feeler gauge, measure the counter 5th gear thrust clearance.

Standard clearance:
0.10 – 0.35 mm (0.0039 – 0.0138 in.)
Maximum clearance: 0.40 mm (0.0157 in.)

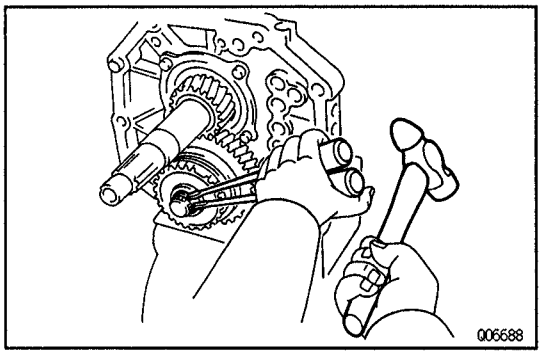

27. REMOVE GEAR SPLINE PIECE NO.5, SYNCHRONIZER RING, NEEDLE ROLLER BEARING AND COUNTER 5TH GEAR WITH HUB SLEEVE NO.3

(a) Using 2 screwdrivers and a hammer, tap out the snap ring.

INSTALLATION HINT: Select a snap ring that will allow minimum axial play.

Mark	Thickness mm (in.)
A	2.80 – 2.85 (0.1102 – 0.1122)
B	2.85 – 2.90 (0.1122 – 0.1142)
C	2.90 – 2.95 (0.1142 – 0.1161)
D	2.95 – 3.00 (0.1161 – 0.1181)
E	3.00 – 3.05 (0.1181 – 0.1201)
F	3.05 – 3.10 (0.1201 – 0.1220)
G	3.10 – 3.15 (0.1220 – 0.1240)

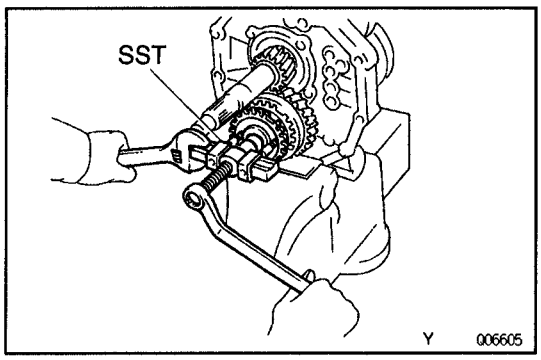

(b) Using SST, remove the gear spline piece No.5.
SST 09950–50010

(c) Remove the counter 5th gear with the hub sleeve No.3.

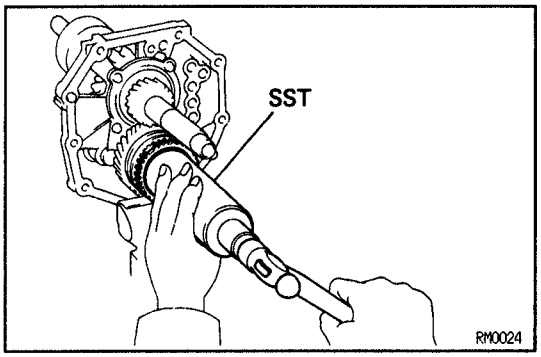

INSTALLATION HINT:

- Using SST and a hammer, drive in the gear spline piece No.5 with the synchronizer ring slots aligned with the shifting keys.

SST 09316–60011 (09316–00011)

- When installing the gear spline piece No.5, support the counter gear in front with a 3–5 lb hammer or equivalent.

28. REMOVE THRUST WASHER AND BALL FROM COUNTER GEAR

29. REMOVE REAR BEARING RETAINER

Remove the 4 bolts and rear bearing retainer.

INSTALLATION HINT: Align the rear bearing retainer to the reverse idler gear shaft groove.

Torque: 18 N·m (185 kgf·cm, 13 ft·lbf)

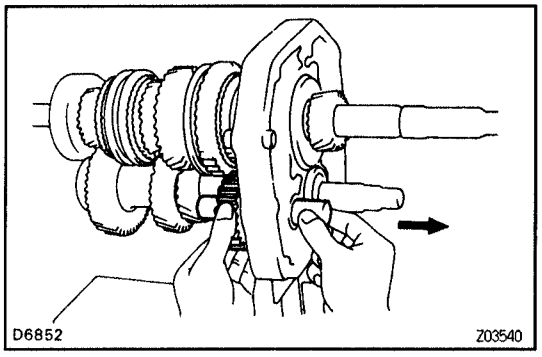

30. REMOVE REVERSE IDLER GEAR AND SHAFT

Pull out the shaft toward the rear.

INSTALLATION HINT: Align the reverse shift arm to the reverse idler gear shaft.

31. REMOVE OUTPUT SHAFT CENTER BEARING SNAP RING

Using a snap ring expander, remove the snap ring.

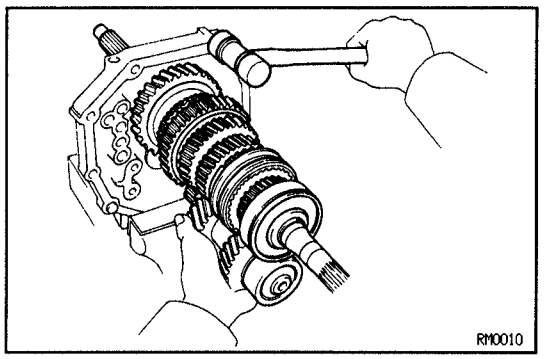

32. REMOVE OUTPUT SHAFT AND COUNTER GEAR FROM INTERMEDIATE PLATE

(a) Remove the output shaft, counter gear and input shaft as a unit from the intermediate plate by pulling on the counter gear and tapping on the intermediate plate with a plastic hammer.

(b) Remove the input shaft with the needle roller bearing from the output shaft.

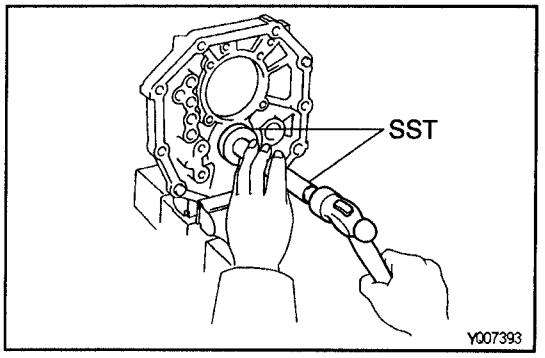

33. REMOVE COUNTER REAR BEARING FROM INTERMEDIATE PLATE

Using SST and a hammer, remove the counter rear bearing.

SST 09950–60010 (09951–00620),
09950–70010 (09951–07150)

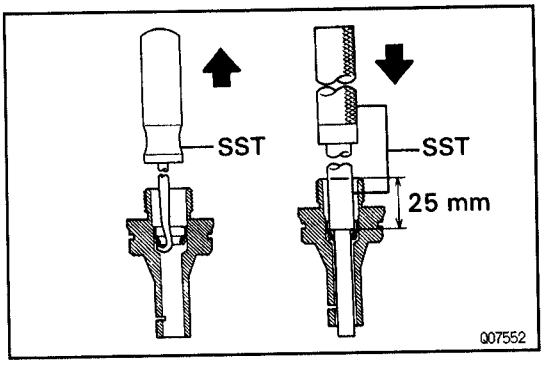

34. 2WD:
IF NECESSARY, REPLACE SPEEDOMETER DRIVEN GEAR OIL SEAL

(a) Using SST, remove the oil seal.
SST 09921–00010

(b) Coat the lip of oil seal with MP grease.

(c) Using SST, drive in a new oil seal.
SST 09201–10000 (09201–01080),
09950–70010 (09951–07150)
Drive in depth: 25 mm (0.98 in.)

MT0C5–01

BASIC SUBASSEMBLY REASSEMBLY

Assembly is in the reverse order of separation.
HINT: Coat all of the sliding and rotating surfaces with gear oil before assembly.

MT

INPUT SHAFT
COMPONENTS

MT02F–05

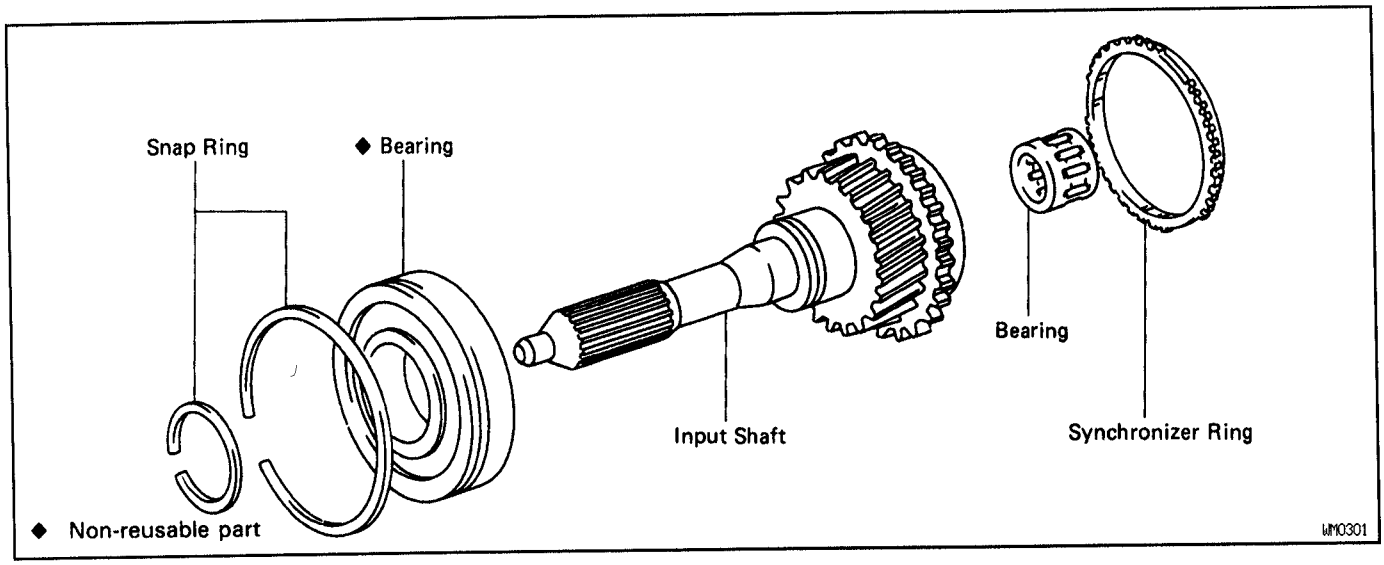

MT02G–0D

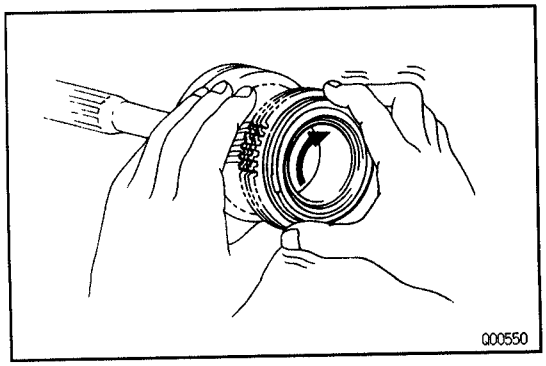

INPUT SHAFT INSPECTION

INSPECT SYNCHRONIZER RING

(a) Check for wear or damage.

(b) Check the braking effect of the synchronizer ring.
Turn the synchronizer ring in one direction while pushing it to the gear cone. Check that the ring locks.

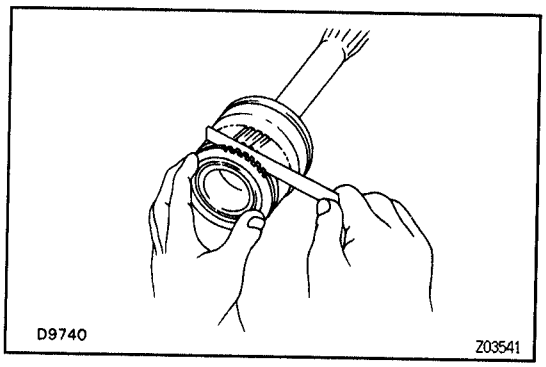

If the braking effect is insufficient, apply a small amount of fine lapping compound between the synchronizer ring and gear cone. Lightly rub the synchronizer ring and gear cone together.

NOTICE: Ensure the fine lapping compound is completely washed off after rubbing.

(c) Check again the braking effect of the synchronizer ring.

(d) Using a feeler gauge, measure the clearance between the synchronizer ring back and gear spline end.

Minimum clearance: 0.8 mm (0.031 in.)

If the clearance is less than the minimum, replace the synchronizer ring and gear cone by applying a small amount of fine lapping compound.

NOTICE: Ensure the fine lapping compound is completely washed off after rubbing.

MT

BEARING REPLACEMENT

MT08B-03

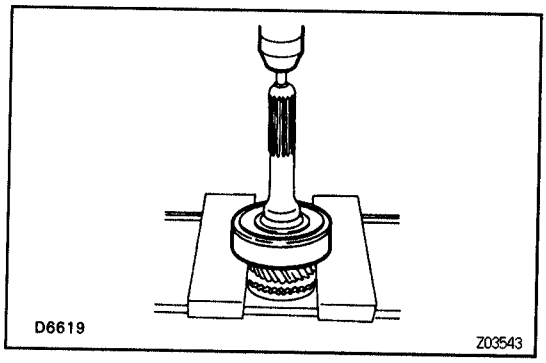

IF NECESSARY, REPLACE INPUT SHAFT BEARING

(a) Using a snap ring expander, remove the snap ring.

(b) Using a press, remove the bearing.

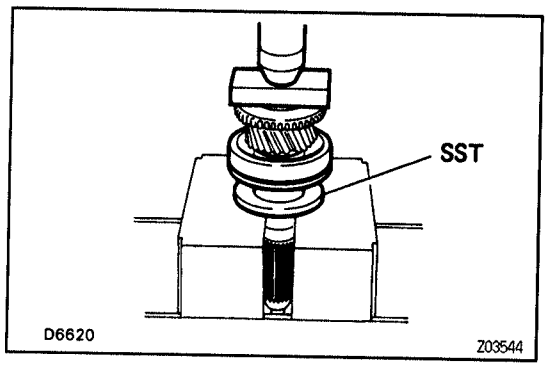

(c) Using SST and a press, install a new bearing.
SST 09506–35010

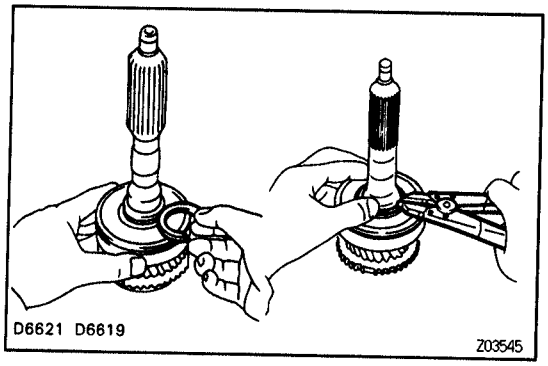

(d) Select a snap ring that will allow minimum axial play.

Mark	Thickness mm (in.)
A	2.10 – 2.15 (0.0827 – 0.0846)
B	2.15 – 2.20 (0.0846 – 0.0866)
C	2.20 – 2.25 (0.0866 – 0.0886)
D	2.25 – 2.30 (0.0886 – 0.0906)
E	2.30 – 2.35 (0.0906 – 0.0925)
F	2.35 – 2.40 (0.0925 – 0.0945)
G	2.40 – 2.45 (0.0945 – 0.0965)

(e) Using a snap ring expander, install the snap ring.

OUTPUT SHAFT
COMPONENTS

MT02J–09

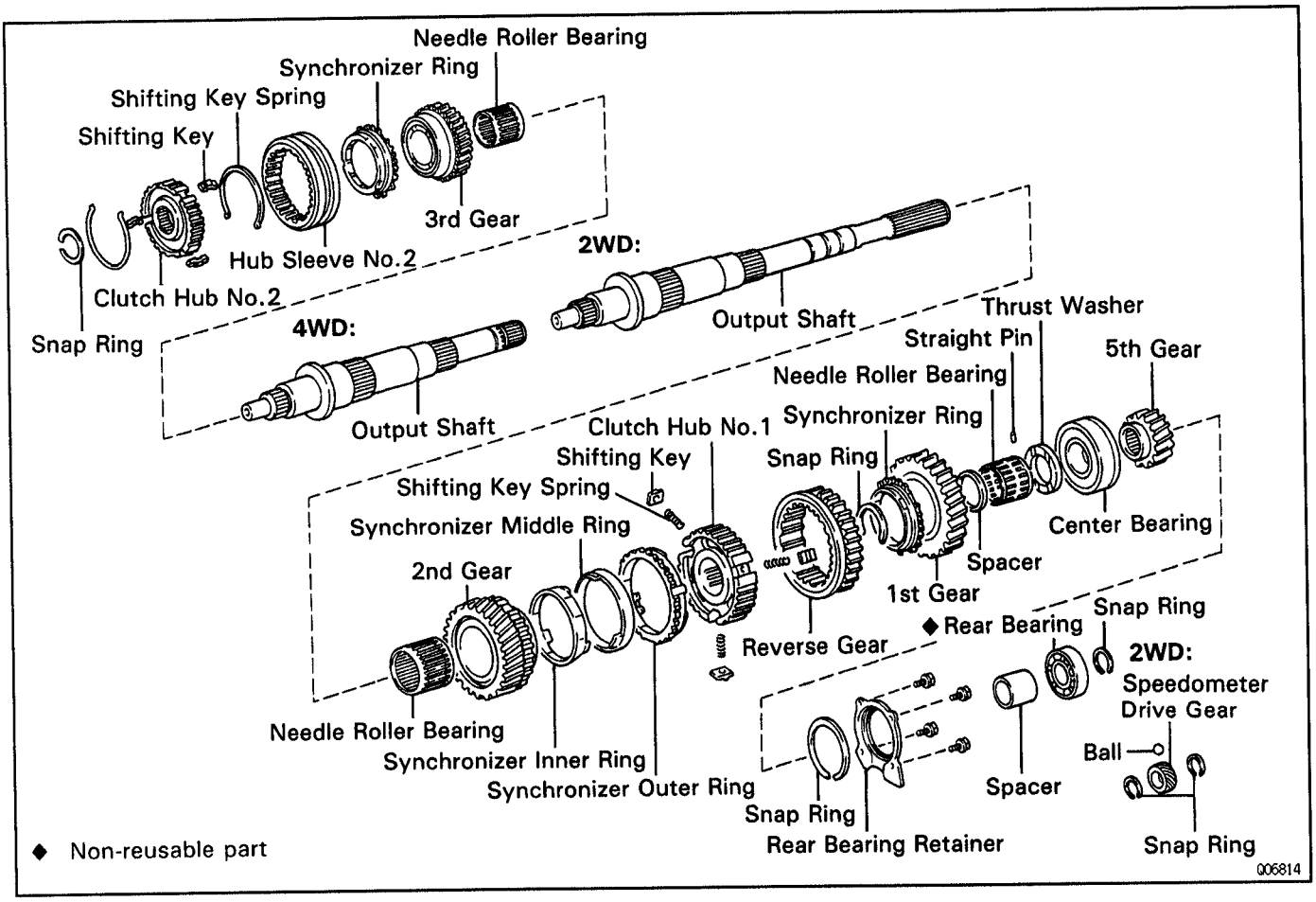

MT08C–04

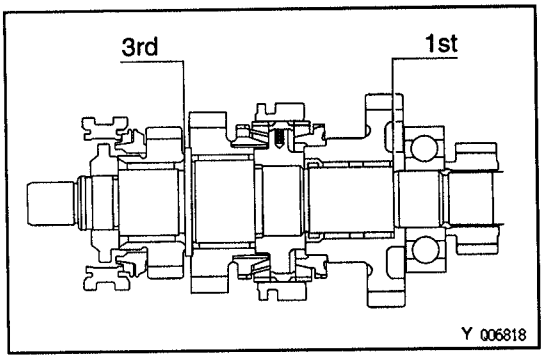

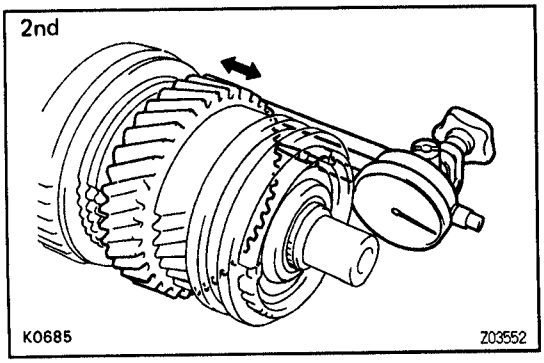

OUTPUT SHAFT DISASSEMBLY

1. INSPECT EACH GEAR THRUST CLEARANCE

Measure the thrust clearance of each gear.

Standard clearance:

1st gear:

0.15–0.45 mm (0.0059–0.0177 in.)

2nd and 3rd gears:

0.10–0.25 mm (0.0039–0.0098 in.)

Maximum clearance:

1st gear: 0.50 mm (0.0197 in.)

2nd and 3rd gears: 0.30 mm (0.0118 in.)

MT

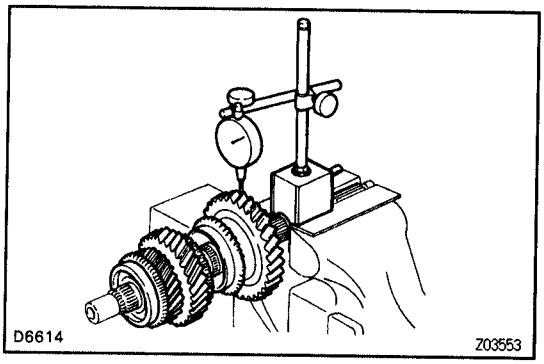

2. INSPECT EACH GEAR RADIAL CLEARANCE

Using a dial indicator, measure the radial clearance of each gear.

Standard clearance:

1st gear:

0.020–0.073 mm (0.0008–0.0029 in.)

2nd and 3rd gears:

0.015–0.068 mm (0.0006–0.0027 in.)

Maximum clearance:

1st gear: 0.160 mm (0.0063 in.)

2nd and 3rd gears: 0.160 mm (0.0063 in.)

If the clearance exceeds the maximum, replace the gear, needle roller bearing or shaft.

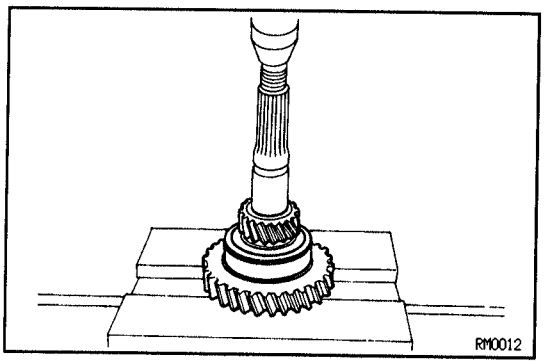

3. REMOVE 5 TH GEAR, OUTPUT SHAFT CENTER BEARING AND 1ST GEAR ASSEMBLY

(a) Using a press, remove the 5th gear, center bearing, thrust washer and 1st gear.
(b) Remove the synchronizer ring.
(c) Remove the straight pin and needle roller bearing.
(d) Remove the spacer.

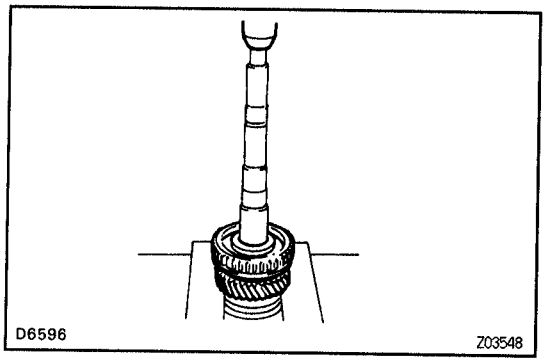

4. REMOVE REVERSE GEAR ASSEMBLY AND 2 ND GEAR ASSEMBLY

(a) Using 2 screwdrivers and a hammer, tap out the snap ring.
(b) Using a press, remove the reverse gear assembly and 2nd gear assembly.
(c) Remove the needle roller bearing.

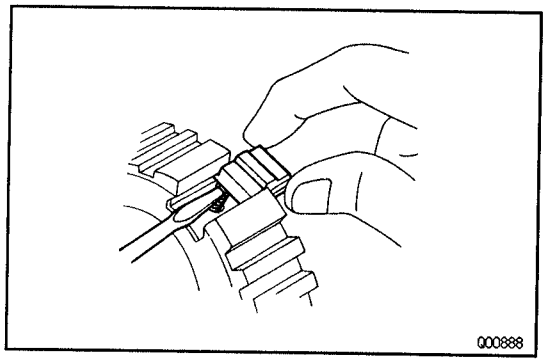

5. REMOVE REVERSE GEAR, SHIFTING KEY AND SPRING FROM CLUTCH HUB NO.1

(a) Remove the reverse gear from the clutch hub No.1.
(b) Push the shifting key spring with a screwdriver, remove the 3 shifting keys and key springs.

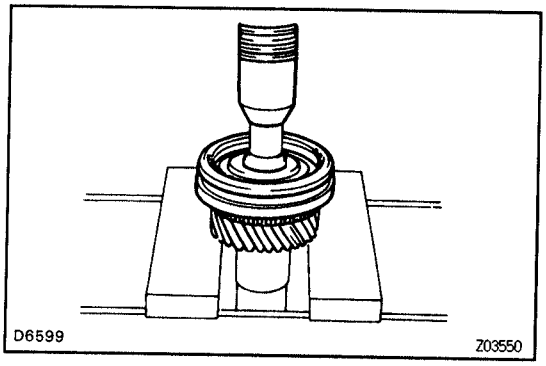

6. REMOVE HUB SLEEVE NO.2 ASSEMBLY AND 3RD GEAR ASSEMBLY

(a) Using a snap ring expander, remove the snap ring.
(b) Using a press, remove the hub sleeve No.2 assembly and 3rd gear assembly.
(c) Remove the needle roller bearing.

7. **REMOVE SHIFTING KEYS AND SPRINGS FROM HUB SLEEVE NO.2 ASSEMBLY**
Using a screwdriver, remove the 3 shifting keys and 2 springs.

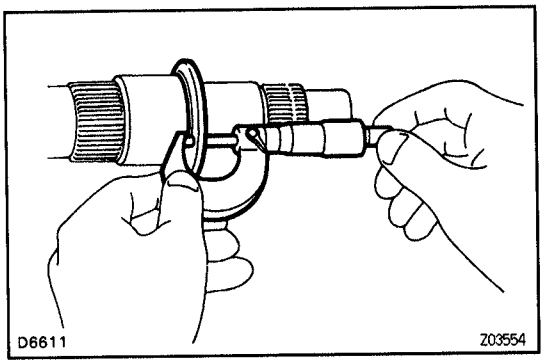

OUTPUT SHAFT COMPONENT PARTS INSPECTION

MT08D–04

1. INSPECT OUTPUT SHAFT

(a) Using a micrometer, measure the output shaft flange thickness.
Minimum thickness: 4.70 mm (0.1850 in.)
If the thickness is less than the minimum, replace the output shaft.

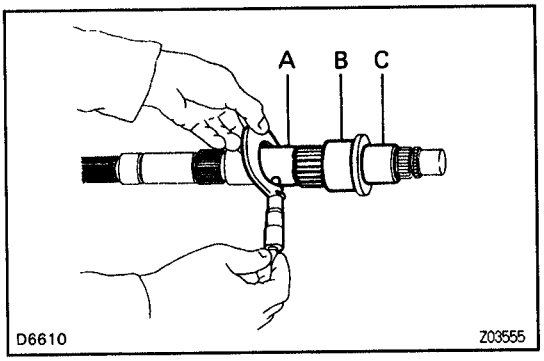

(b) Using a micrometer, measure the outer diameter of the output shaft journal.
Minimum diameter:
A 1st gear: 38.860 mm (1.5299 in.)
B 2nd gear: 46.860 mm (1.8449 in.)
C 3rd gear: 37.860 mm (1.4905 in.)
If the outer diameter is less than the minimum, replace the output shaft.

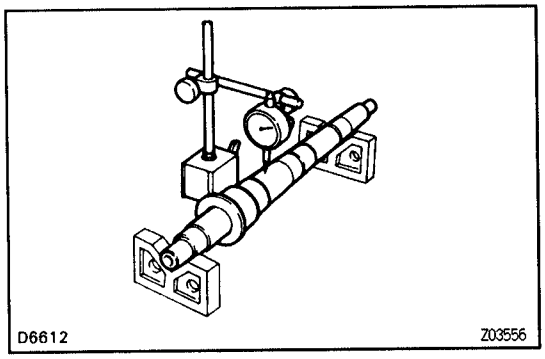

(c) Using a dial indicator, check the shaft runout.
Maximum runout: 0.06 mm (0.0024 in.)
If the runout exceeds the maximum, replace the output shaft.

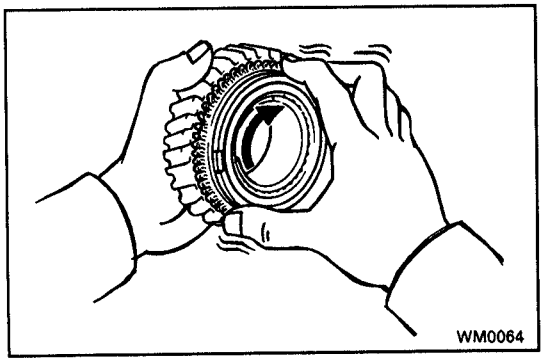

2. INSPECT 1ST AND 3RD GEARS SYNCHRONIZER RINGS

(a) Check for wear or damage.
(b) Check the braking effect of the synchronizer ring.
Turn the synchronizer ring in one direction while pushing it to the gear cone. Check that the ring locks.

MT

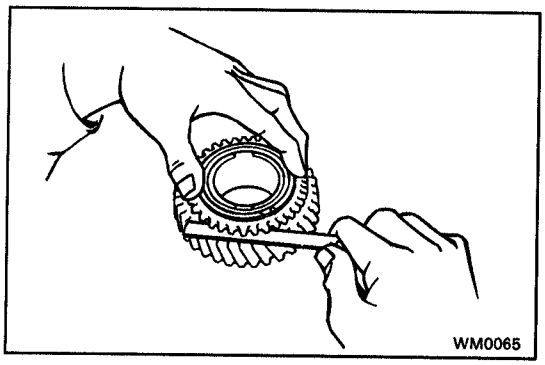

If the braking effect is insufficient, apply a small amount of fine lapping compound between the synchronizer ring and gear cone. Lightly rub the synchronizer ring and gear cone together.

NOTICE: Ensure the fine lapping compound is completely washed off after rubbing.

(c) Check again the braking effect of the synchronizer ring.

(d) Using a feeler gauge, measure the clearance between the synchronizer ring back and gear spline end.

Minimum clearance: 0.8 mm (0.031 in.)

If the clearance is less than the minimum, replace the synchronizer ring and gear cone by applying a small amount of fine lapping compound.

NOTICE: Ensure the fine lapping compound is completely washed off after rubbing.

MT

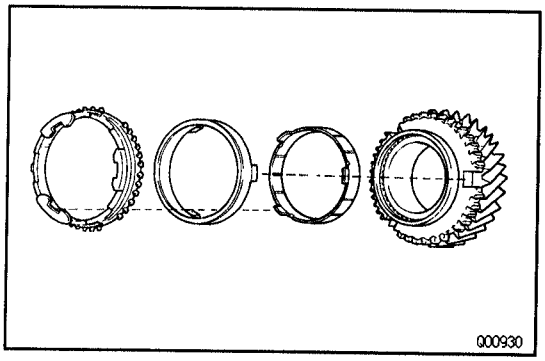

3. INSPECT 2ND GEAR SYNCHRONIZER RING

(a) Check for wear or damage.

(b) Install the synchronizer inner ring, middle ring and outer ring to each gear.

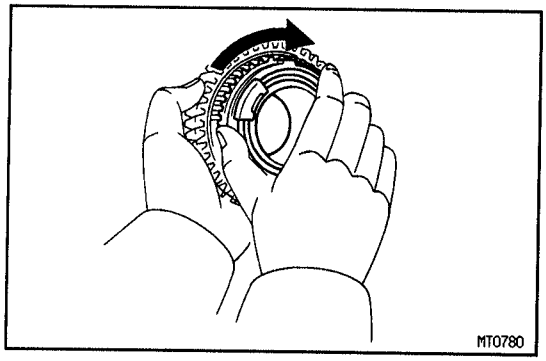

(c) Check the braking effect of the synchronizer ring. Turn the synchronizer ring in one direction while pushing it to the gear cone. Check that the ring locks. If it does not lock, replace the synchronizer ring.

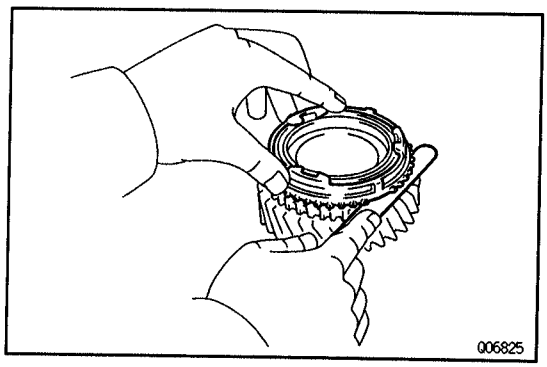

(d) Using a feeler gauge, measure the clearance between the synchronizer ring back and gear spline end.

Minimum clearance: 0.8 mm (0.031 in.)

If the clearance is less than the minimum, replace the synchronizer ring.

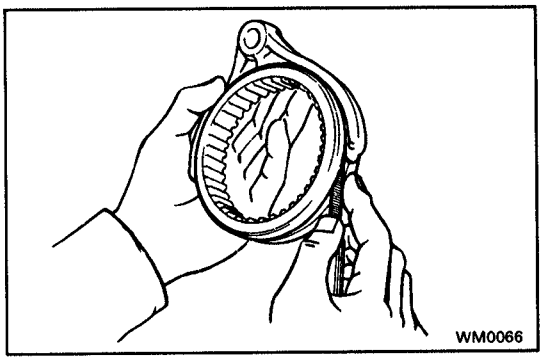

4. INSPECT SHIFT FORK AND HUB SLEEVES CLEARANCE

Using a feeler gauge, measure the clearance between the hub sleeve and shift fork.

Maximum clearance: 1.0 mm (0.039 in.)

If the clearance exceeds the maximum, replace the shift fork or hub sleeve.

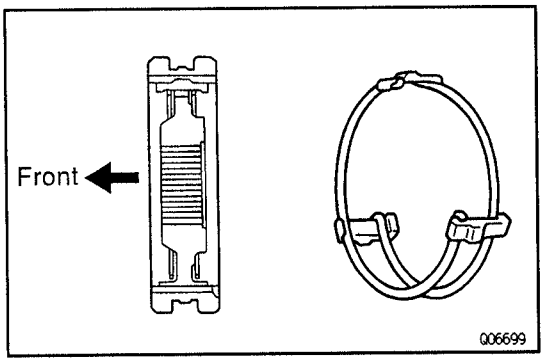

OUTPUT SHAFT ASSEMBLY

MT08E-03

HINT: Coat all of the sliding and rotating surfaces with gear oil before assembly.

1. INSTALL CLUTCH HUB NO.2 INTO HUB SLEEVE NO.2

(a) Install the clutch hub No.2 and shifting keys to the hub sleeve No.2.

(b) Install the shifting key springs under the shifting keys.

NOTICE: Position the key springs so that their end gaps are not in line.

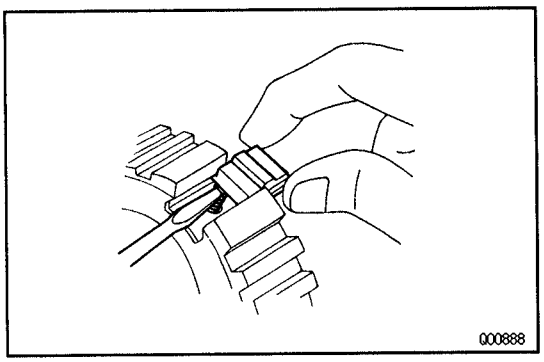

2. INSTALL CLUTCH HUB NO.1 INTO REVERSE GEAR

(a) Install the 3 shifting key springs to the clutch hub No.1.

(b) While pushing the shifting key spring with a screwdriver, install the 3 shifting keys.

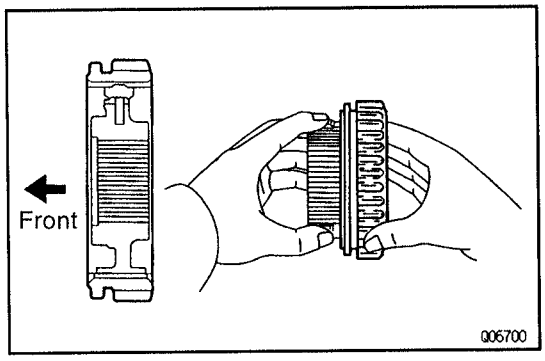

(c) While pushing the 3 shifting keys, install the clutch hub No.1 to the reverse gear, as shown.

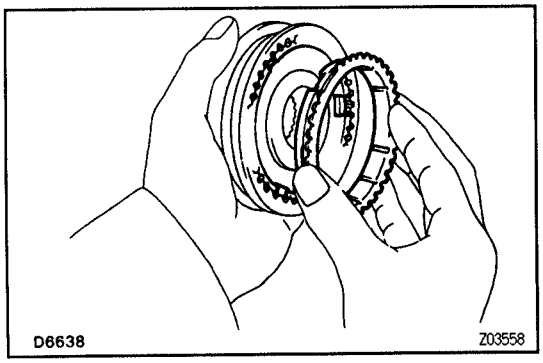

3. INSTALL 3RD GEAR AND HUB SLEEVE NO.2 ON OUTPUT SHAFT

(a) Apply gear oil to the shaft and needle roller bearing.

(b) Place the synchronizer ring on the gear and align the ring slots with the shifting keys.

(c) Install the needle roller bearing in the 3rd gear.

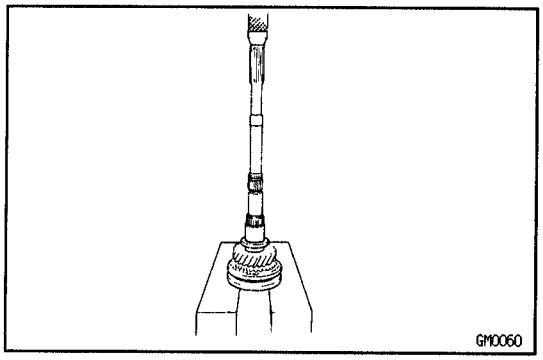

(d) Using a press, install the 3rd gear and hub sleeve No.2.

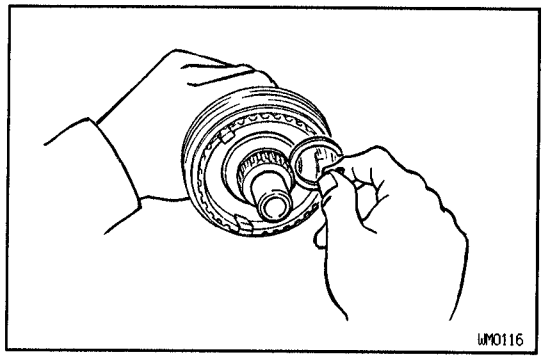

4. INSTALL SNAP RING

(a) Select a snap ring that will allow minimum axial play.

Mark	Thickness mm (in.)
A	1.80 – 1.85 (0.0709 – 0.0728)
B	1.85 – 1.90 (0.0728 – 0.0748)
C	1.90 – 1.95 (0.0748 – 0.0768)
D	1.95 – 2.00 (0.0768 – 0.0787)
E	2.00 – 2.05 (0.0787 – 0.0807)
F	2.05 – 2.10 (0.0807 – 0.0827)
G	2.10 – 2.15 (0.0827 – 0.0846)

(b) Using a snap ring expander, install the snap ring.

5. INSPECT 3RD GEAR THRUST CLEARANCE
(See page MT–21)

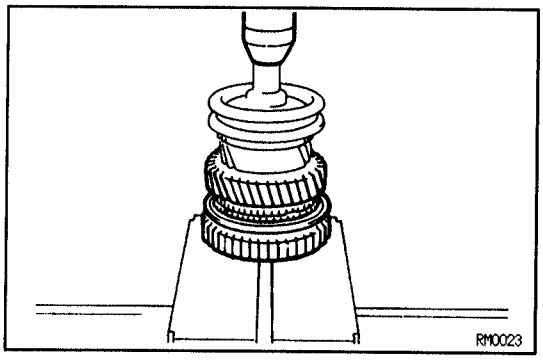

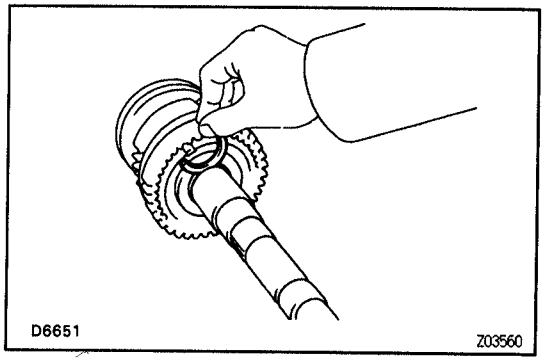

6. INSTALL 2ND GEAR AND REVERSE GEAR

(a) Apply gear oil to the shaft and needle roller bearing.

(b) Place the synchronizer ring on the gear and align the ring slots with the shifting keys.

(c) Install the needle roller bearing in the 2nd gear.

(d) Using a press, install the 2nd gear assembly and reverse gear assembly.

7. INSTALL SNAP RING

(a) Select a snap ring that will allow minimum axial play.

Mark	Thickness mm (in.)
A	2.30 – 2.35 (0.0906 – 0.0925)
B	2.35 – 2.40 (0.0925 – 0.0945)
C	2.40 – 2.45 (0.0945 – 0.0965)
D	2.45 – 2.50 (0.0965 – 0.0984)
E	2.50 – 2.55 (0.0984 – 0.1004)
F	2.55 – 2.60 (0.1004 – 0.1024)
G	2.60 – 2.65 (0.1024 – 0.1043)

(b) Using a screwdriver and hammer, install the snap ring.

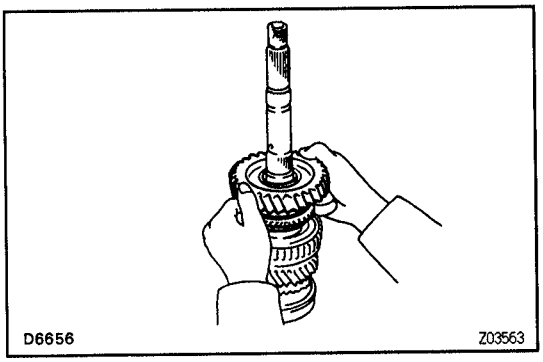

8. INSTALL SPACER AND 1ST GEAR ASSEMBLY

(a) Install the spacer on the output shaft.
(b) Apply gear oil to the needle roller bearing.
(c) Assemble the 1st gear, synchronizer ring and needle roller bearing.
(d) Install the assembly on the output shaft with the synchronizer ring slots aligned with the shifting keys.

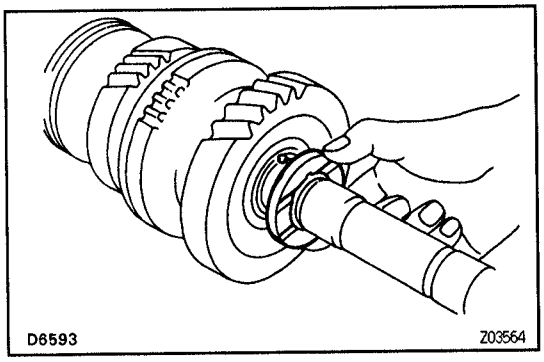

9. INSTALL STRAIGHT PIN AND 1ST GEAR THRUST WASHER

Install the 1st gear thrust washer onto the output shaft with the straight pin aligned with the 1st gear thrust washer.

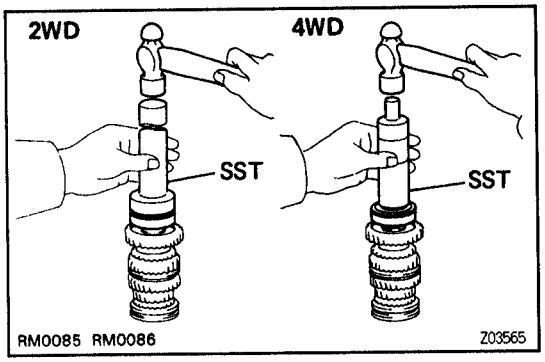

10. INSTALL OUTPUT SHAFT CENTER BEARING

Using SST and a hammer, drive in the bearing with the outer race snap ring groove toward the rear.
2WD:
SST 09309–35010
4WD:
SST 09316–60011 (09316–00011, 09316–00071)

11. INSPECT 1ST GEAR THRUST CLEARANCE
(See page MT–21)

12. INSPECT 2ND GEAR THRUST CLEARANCE
(See page MT–21)

13. INSTALL 5TH GEAR

Using SST and a press, install the 5th gear.
SST 09316–60011 (09316–00031)

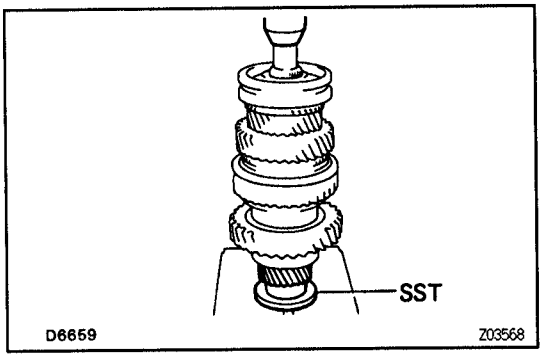

COUNTER GEAR AND REVERSE IDLER GEAR

COMPONENTS

MT02N–05

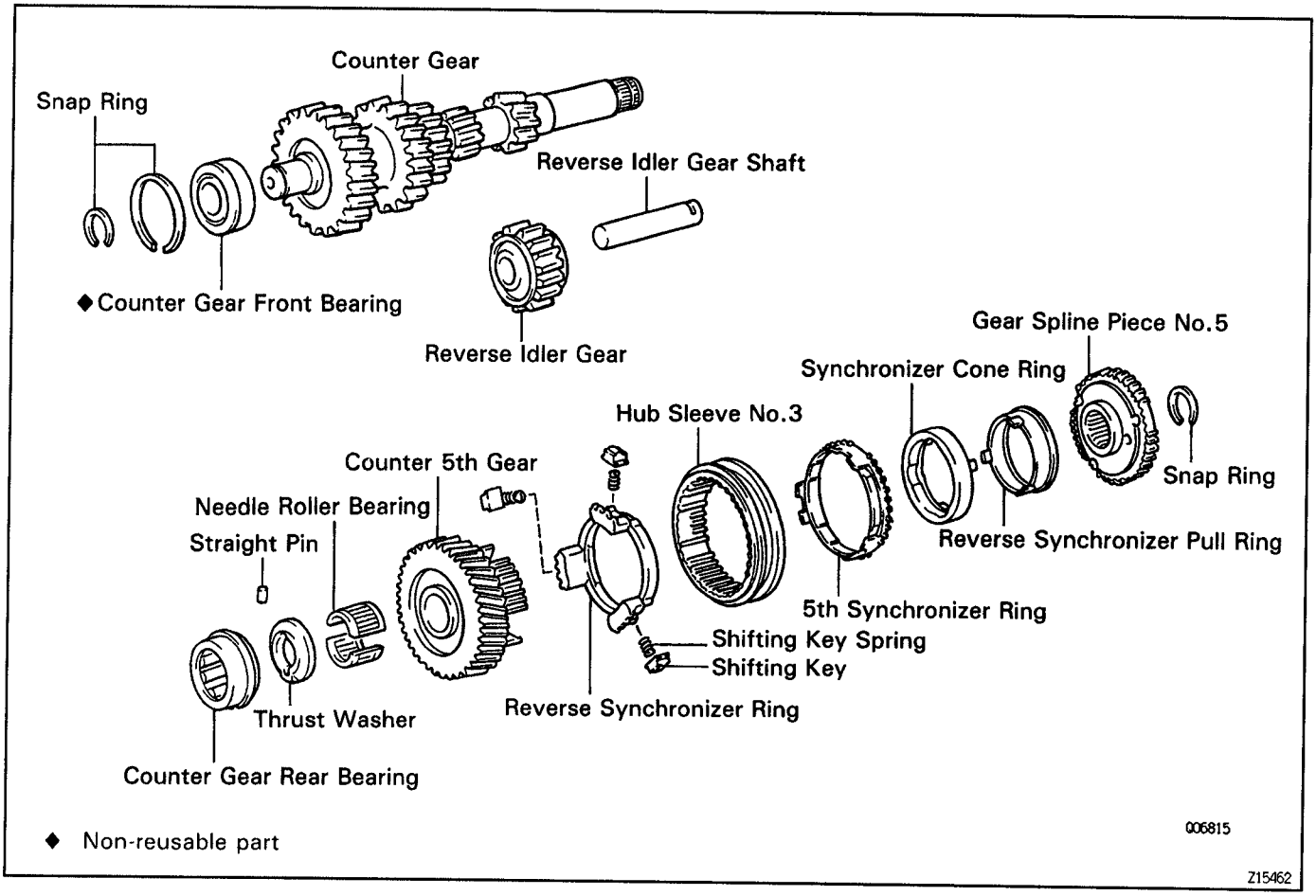

◆ Non-reusable part

Z15462

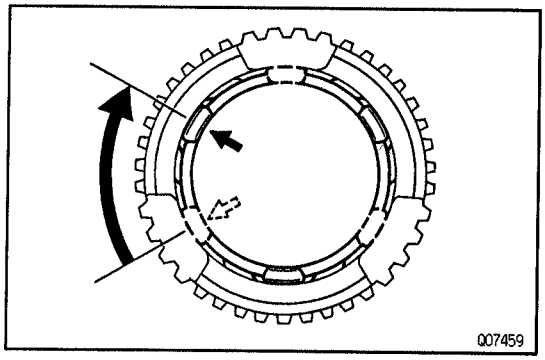

COUNTER GEAR COMPONENT PARTS DISASSEMBLY

MT08F–04

REMOVE HUB SLEEVE NO.3, SHIFTING KEY AND SPRING FROM SYNCHRONIZER RING

(a) Remove the synchronizer ring assembly from the hub sleeve No.3.

(b) Turn the reverse synchronizer pull ring.

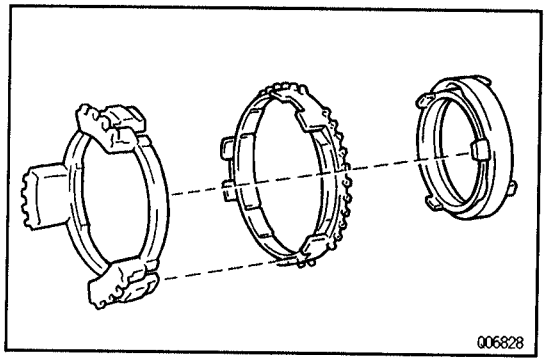

(c) Remove the reverse synchronizer ring and 5th synchronizer ring from the synchronizer pull ring and cone ring.

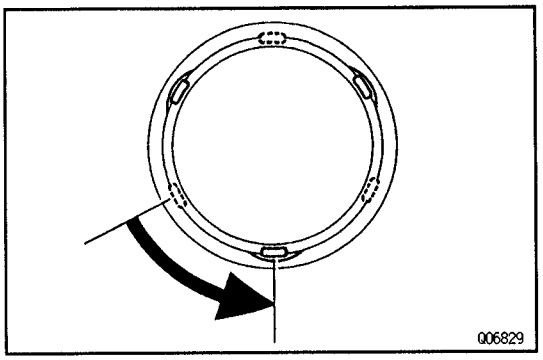

(d) Turn the reverse synchronizer pull ring, separate the pull ring and cone ring.

(e) Push the shifting key and spring, and remove the 3 shifting keys and springs to the reverse synchronizer ring.

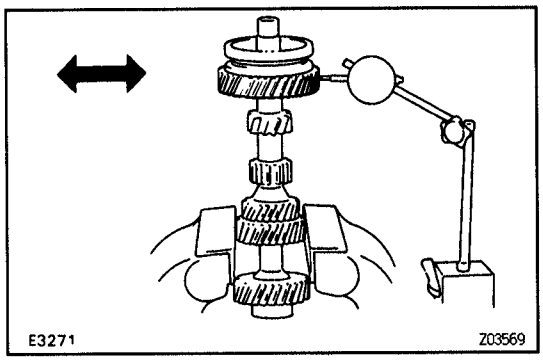

COUNTER GEAR AND REVERSE IDLER GEAR COMPONENT PARTS INSPECTION MT02Q-0C

1. INSPECT 5TH GEAR RADIAL CLEARANCE

(a) Install the spacer, counter 5th gear and needle roller bearings.

(b) Using a dial indicator, measure the counter 5th gear radial clearance.

Standard clearance:

0.015 – 0.068 mm (0.0006 – 0.0027 in.)

Maximum clearance: 0.160 mm (0.0063 in.)

If the clearance exceeds the maximum, replace the gear bearing or shaft.

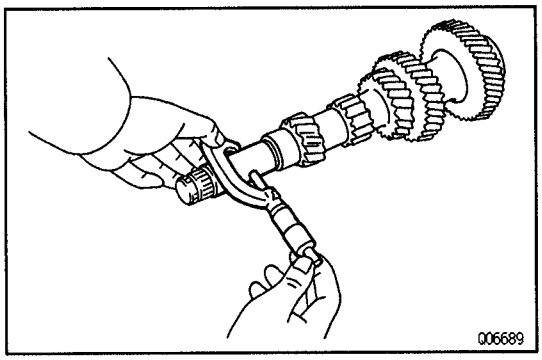

2. INSPECT COUNTER GEAR

Using a micrometer, measure the outer diameter of the counter gear journal.

Minimum diameter: 27.860 mm (1.0968 in.)

If the outer diameter is less than the minimum, replace the counter gear.

3. INSPECT 5TH SYNCHRONIZER RING

(a) Check for wear or damage.

(b) Install the synchronizer pull ring, cone ring and outer ring to the gear spline piece No.5.

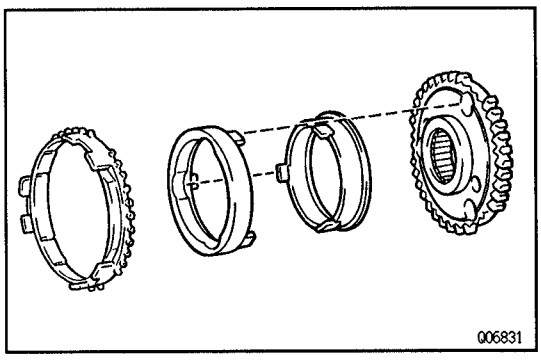

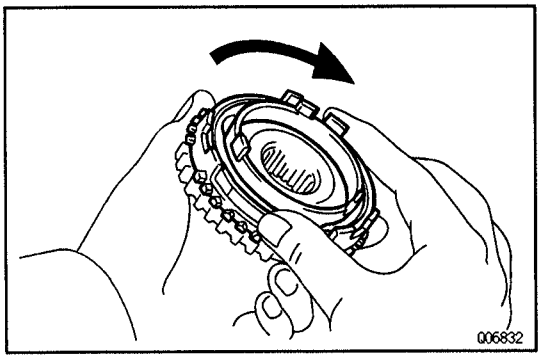

(c) Check the braking effect of the synchronizer ring. Turn the synchronizer ring in one direction while pushing it to the gear cone. Check that the ring locks. If it does not lock, replace the synchronizer ring.

MT

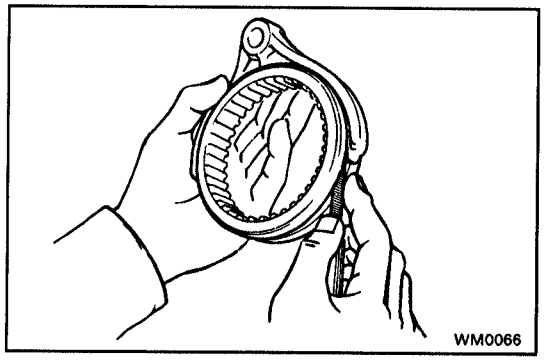

4. INSPECT SHIFT FORK AND HUB SLEEVE CLEARANCE

Using a feeler gauge, measure the clearance between the hub sleeve and shift fork.

Maximum clearance: 1.0 mm (0.039 in.)

If the clearance exceeds the maximum, replace the shift fork or hub sleeve.

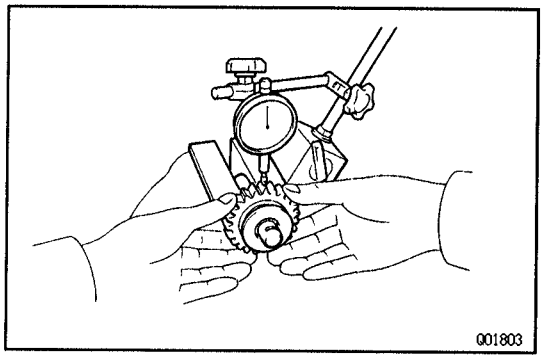

5. INSPECT REVERSE IDLER GEAR RADIAL CLEARANCE

Using a dial indicator, measure the reverse idler gear radial clearance.

Standard clearance:

0.040–0.082 mm (0.0016–0.0032 in.)

Maximum clearance: 0.130 mm (0.0051 in.)

If the clearance exceeds the maximum, replace the reverse idler gear or reverse idler gear shaft.

MT

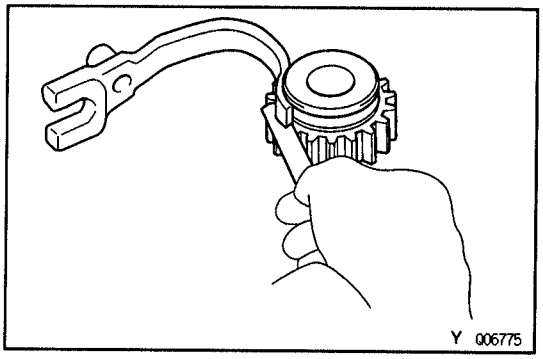

6. INSPECT REVERSE IDLER GEAR AND SHIFT ARM CLEARANCE

Using a feeler gauge, measure the clearance between the reverse idler gear and shift arm.

Standard clearance:

0.05–0.35 mm (0.0020–0.0138 in.)

Maximum clearance: 0.50 mm (0.0197 in.)

If the clearance exceeds the maximum, replace the shift arm or reverse idler gear.

BEARING REPLACEMENT

MT02R-05

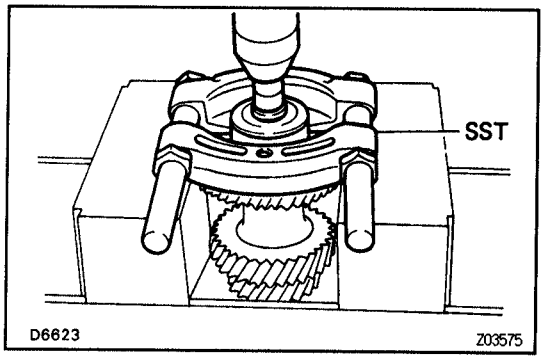

IF NECESSARY, REPLACE COUNTER GEAR FRONT BEARING

(a) Using a snap ring expander, remove the snap ring.

(b) Using SST and a press, remove the bearing.
SST 09950–00020

(c) Replace the side race.

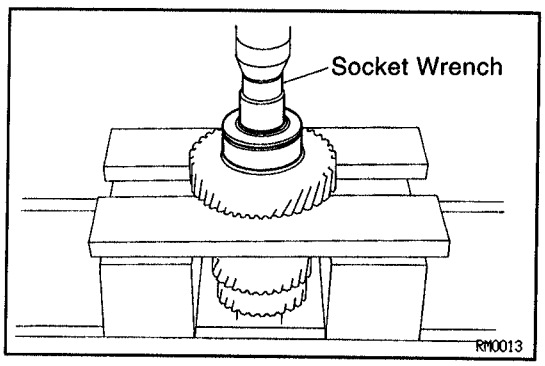

(d) Using a socket wrench and press, install a new bearing and side race.

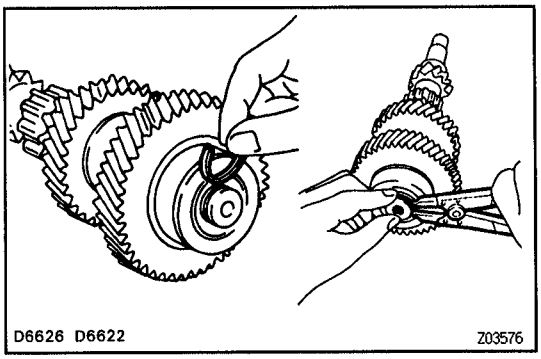

(e) Select a snap ring that will allow minimum axial play.

Mark	Thickness mm (in.)
A	2.00 – 2.05 (0.0787 – 0.0807)
B	2.05 – 2.10 (0.0807 – 0.0827)
C	2.10 – 2.15 (0.0827 – 0.0846)
D	2.15 – 2.20 (0.0846 – 0.0866)
E	2.20 – 2.25 (0.0866 – 0.0886)
F	2.25 – 2.30 (0.0886 – 0.0906)

(f) Using a snap ring expander, install the snap ring.

MT0BG-03

COUNTER GEAR COMPONENT PARTS ASSEMBLY

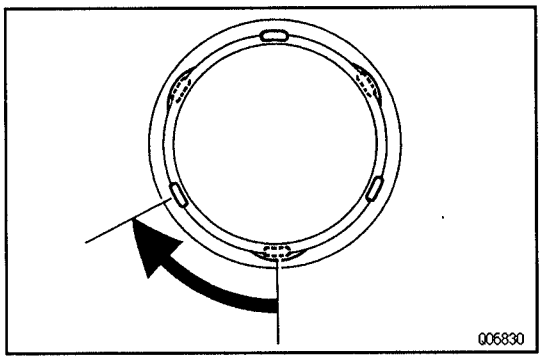

INSTALL SYNCHRONIZER RING ASSEMBLY TO HUB SLEEVE NO.3

(a) Put the key spring to the hole of the shifting key.
(b) Push the 3 shifting keys with the 3 key springs to the reverse synchronizer ring.
(c) Install the synchronizer cone ring to the reverse synchronizer pull ring and turn the pull ring.
(d) Install the 5th synchronizer ring.
(e) Install the reverse synchronizer ring.

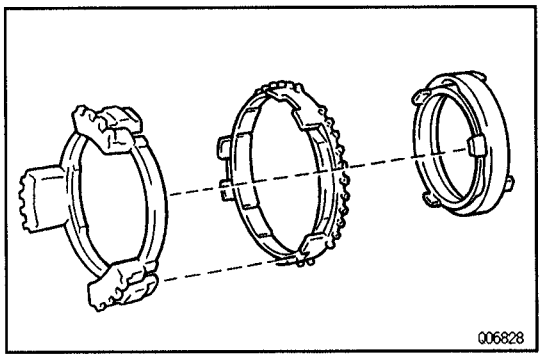

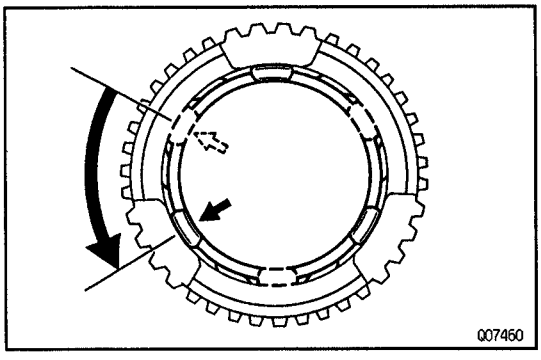

(f) Turn the reverse synchronizer pull ring.

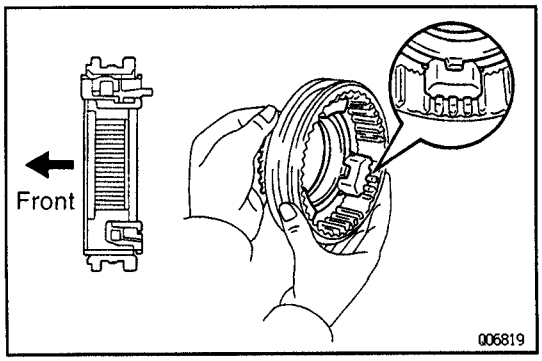

(g) While pushing the 3 shifting keys, install the synchronizer ring assembly to the hub sleeve No.3.

MT

FRONT BEARING RETAINER

COMPONENTS

MT02T–04

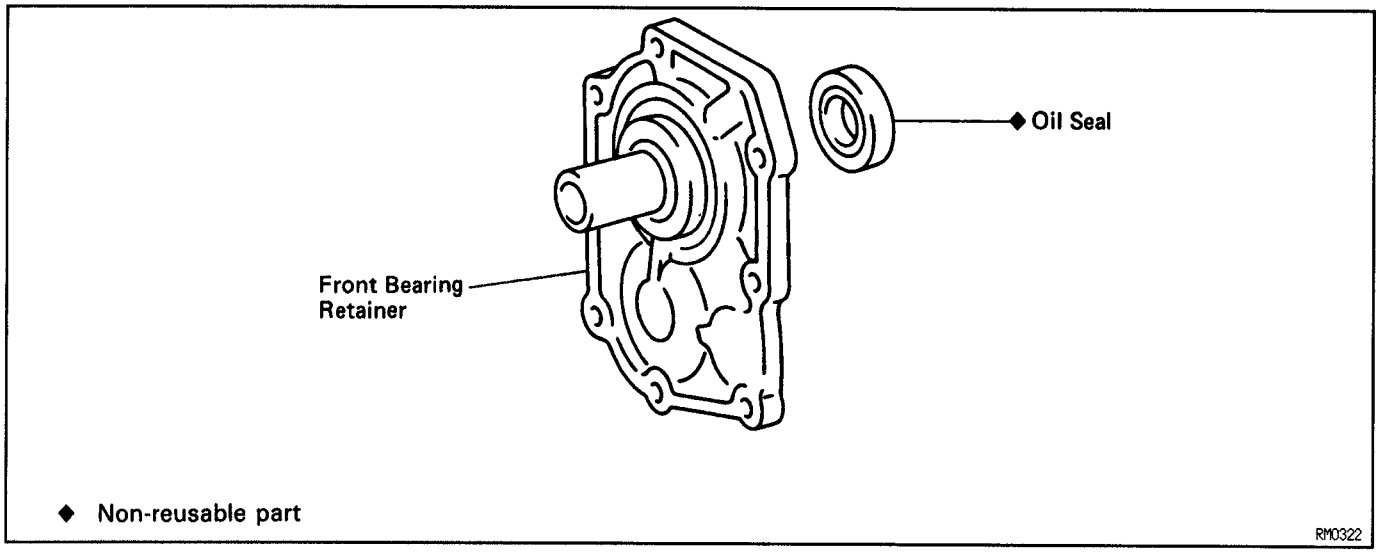

MT

OIL SEAL REPLACEMENT

MT02U–00

IF NECESSARY, REPLACE FRONT BEARING RETAINER OIL SEAL

(a) Using a screwdriver, pry out the oil seal.

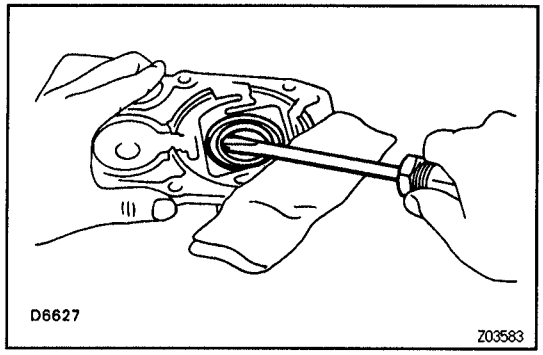

(b) Using SST and a hammer, drive in a new oil seal.
SST 09950–60010 (09951–00510),
09950–70010 (09951–07150)
Drive in depth:
11.7 ± 0.5 mm (0.461 ± 0.020 in.)
from retainer end

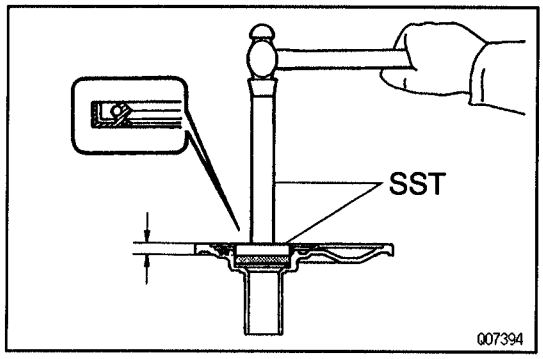

EXTENSION HOUSING AND TRANSFER ADAPTOR

MT02V-06

COMPONENTS

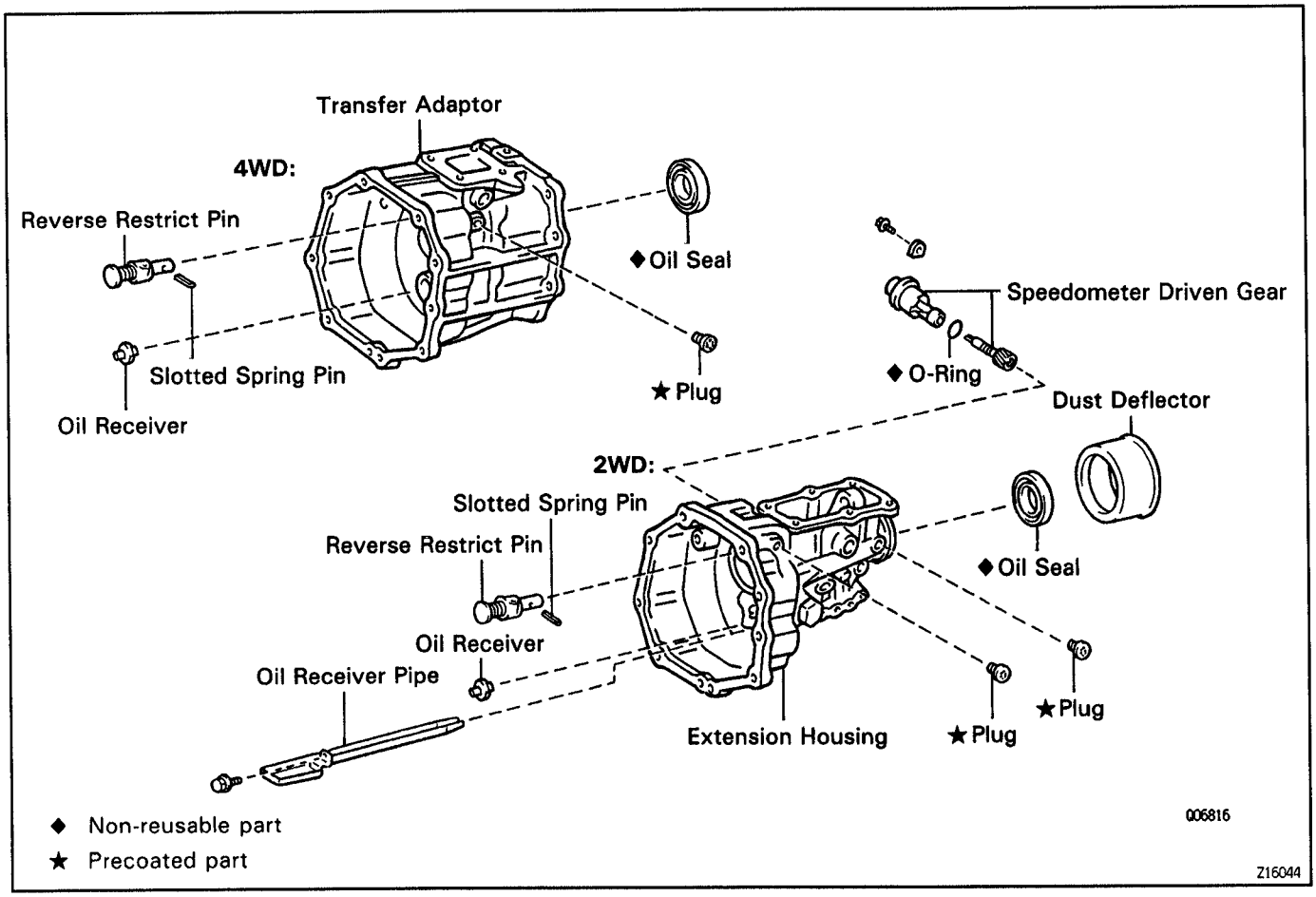

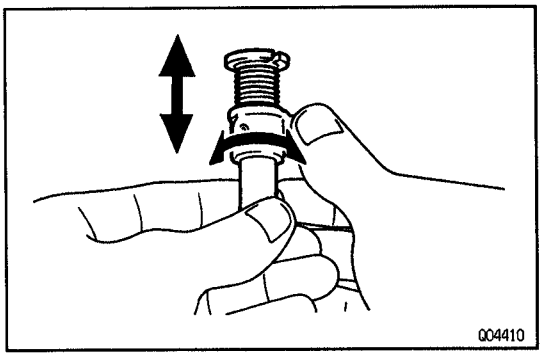

REVERSE RESTRICT PIN REPLACEMENT

MT08H-03

1. **REMOVE REVERSE RESTRICT PIN**
(a) Using a torx socket wrench, remove the screw plug. (Torx socket wrench T40 09042–00020)
(b) Using a pin punch and hammer, drive out the slotted spring pin.
(c) Remove the reverse restrict pin.
2. **REVERSE RESTRICT PIN INSPECTION**
Turn and push the reverse restrict pin by hand. Check for smooth operation.

MT

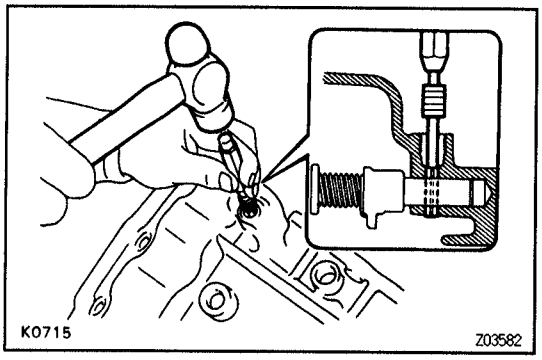

3. INSTALL REVERSE RESTRICT PIN

(a) Install the reverse restrict pin to the extension housing or transfer adaptor.

(b) Using a pin punch and hammer, drive in the slotted spring pin, as shown.

(c) Apply sealant to the plug threads.
Sealant: Part No. 08833 – 00080, THREE BOND 1344, LOCTITE 242 or equivalent

(d) Using a torx socket wrench, install and torque the screw plug.
(Torx socket wrench T40 09042–00020)
Torque: 19 N·m (190 kgf·cm, 14 ft·lbf)

MT

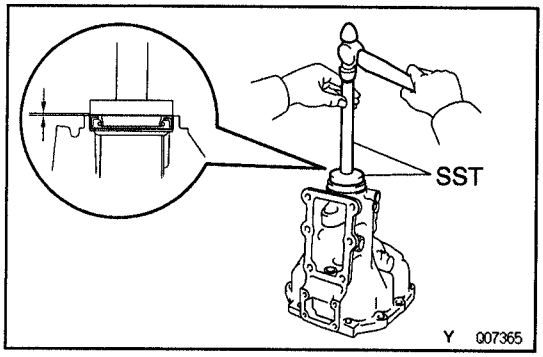

OIL SEAL REPLACEMENT

MT0BJ–04

1. 2WD:
IF NECESSARY, REPLACE EXTENSION HOUSING OIL SEAL

(a) Remove the dust deflector.

(b) Using a screwdriver, pry out the oil seal.

(c) Using SST and a hammer, drive in a new oil seal.
SST 09950–60010 (09951–00570),
09950–70010 (09951–07150)
Drive in depth: 0 ± 0.5 mm (0 ± 0.020 in.)

(d) Install the deflector.

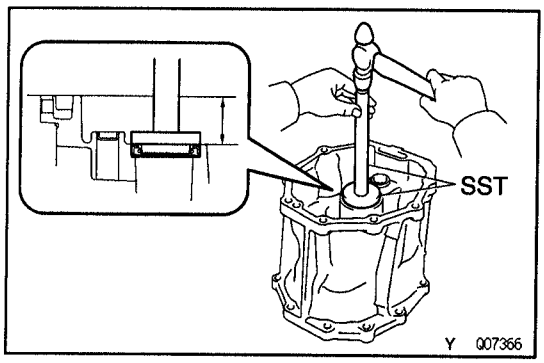

2. 4WD:
IF NECESSARY, REPLACE TRANSFER ADAPTOR OIL SEAL

(a) Using a screwdriver, pry out the oil seal.

(b) Using SST and a hammer, drive in a new oil seal.
SST 09950–60010 (09951–00570),
09950–70010 (09951–07150)
Drive in depth: 45.6 ± 0.5 mm (1.795 ± 0.020 in.)

SERVICE SPECIFICATIONS

SERVICE DATA

MT02Z–0A

Output shaft 1st gear journal diameter	Min.	38.860 mm (1.5299 in.)
Output shaft 2nd gear journal diameter	Min.	46.860 mm (1.8449 in.)
Output shaft 3rd gear journal diameter	Min.	37.860 mm (1.4905 in.)
Output shaft flange thickness	Min.	4.70 mm (0.1850 in.)
Output shaft runout	Max.	0.06 mm (0.0024 in.)
Gear thrust clearance 1st	STD	0.15–0.45 mm (0.0059–0.0177 in.)
	Max.	0.50 mm (0.0197 in.)
Gear thrust clearance 2nd and 3rd	STD	0.10–0.25 mm (0.0039–0.0098 in.)
	Max.	0.30 mm (0.0118 in.)
Gear radial clearance 1st	STD	0.020–0.073 mm (0.0008–0.0029 in.)
	Max.	0.160 mm (0.0063 in.)
Gear radial clearance 2nd and 3rd	STD	0.015–0.068 mm (0.0006–0.0027 in.)
	Max.	0.160 mm (0.0063 in.)
Shift fork to hub sleeve clearance	Max.	1.0 mm (0.039 in.)
Synchronizer ring to gear clearance	Min.	0.8 mm (0.031 in.)
Input shaft snap ring thickness		
	Mark A	2.10–2.15 mm (0.0827–0.0846 in.)
	Mark B	2.15–2.20 mm (0.0846–0.0866 in.)
	Mark C	2.20–2.25 mm (0.0866–0.0886 in.)
	Mark D	2.25–2.30 mm (0.0886–0.0906 in.)
	Mark E	2.30–2.35 mm (0.0906–0.0925 in.)
	Mark F	2.35–2.40 mm (0.0925–0.0945 in.)
	Mark G	2.40–2.45 mm (0.0945–0.0965 in.)
Output shaft snap ring thickness		
Clutch hub No.1	Mark A	2.30–2.35 mm (0.0906–0.0925 in.)
	Mark B	2.35–2.40 mm (0.0925–0.0945 in.)
	Mark C	2.40–2.45 mm (0.0945–0.0965 in.)
	Mark D	2.45–2.50 mm (0.0965–0.0984 in.)
	Mark E	2.50–2.55 mm (0.0984–0.1004 in.)
	Mark F	2.55–2.60 mm (0.1004–0.1024 in.)
	Mark G	2.60–2.65 mm (0.1024–0.1043 in.)
Output shaft snap ring thickness		
Clutch hub No.2	Mark A	1.80–1.85 mm (0.0709–0.0728 in.)
	Mark B	1.85–1.90 mm (0.0728–0.0748 in.)
	Mark C	1.90–1.95 mm (0.0748–0.0768 in.)
	Mark D	1.95–2.00 mm (0.0768–0.0787 in.)
	Mark E	2.00–2.05 mm (0.0787–0.0807 in.)
	Mark F	2.05–2.10 mm (0.0807–0.0827 in.)
	Mark G	2.10–2.15 mm (0.0827–0.0846 in.)

Output shaft snap ring thickness		
Rear	Mark A	2.65–2.70 mm (0.1043–0.1063 in.)
	Mark B	2.70–2.75 mm (0.1063–0.1083 in.)
	Mark C	2.75–2.80 mm (0.1083–0.1102 in.)
	Mark D	2.80–2.85 mm (0.1102–0.1122 in.)
	Mark E	2.85–2.90 mm (0.1122–0.1142 in.)
	Mark F	2.90–2.95 mm (0.1142–0.1161 in.)
	Mark G	2.95–3.00 mm (0.1161–0.1181 in.)
	Mark H	3.00–3.05 mm (0.1181–0.1201 in.)
	Mark J	3.05–3.10 mm (0.1201–0.1220 in.)
	Mark K	3.10–3.15 mm (0.1220–0.1240 in.)
	Mark L	3.15–3.20 mm (0.1240–0.1260 in.)
	Mark M	3.20–3.25 mm (0.1260–0.1280 in.)
	Mark N	3.25–3.30 mm (0.1280–0.1299 in.)
	Mark P	3.30–3.35 mm (0.1299–0.1319 in.)
	Mark Q	3.35–3.40 mm (0.1319–0.1339 in.)
	Mark R	3.40–3.45 mm (0.1339–0.1358 in.)
	Mark S	3.45–3.50 mm (0.1358–0.1378 in.)
Counter gear roller bearing journal diameter	Min.	27.860 mm (1.0968 in.)
Counter 5th gear thrust clearance	STD	0.10–0.35 mm (0.0039–0.0138 in.)
	Max.	0.40 mm (0.0157 in.)
Counter 5th radial clearance	STD	0.015–0.068 mm (0.0006–0.0027 in.)
	Max.	0.160 mm (0.0063 in.)
Reverse idler gear radial clearance	STD	0.040–0.082 mm (0.0016–0.0032 in.)
	Max.	0.130 mm (0.0051 in.)
Reverse idler gear to shift arm clearance	STD	0.05–0.35 mm (0.0020–0.0138 in.)
	Max.	0.50 mm (0.0197 in.)
Counter gear snap ring thickness		
Front	Mark A	2.00–2.05 mm (0.0787–0.0807 in.)
	Mark B	2.05–2.10 mm (0.0807–0.0827 in.)
	Mark C	2.10–2.15 mm (0.0827–0.0846 in.)
	Mark D	2.15–2.20 mm (0.0846–0.0866 in.)
	Mark E	2.20–2.25 mm (0.0866–0.0886 in.)
	Mark F	2.25–2.30 mm (0.0886–0.0906 in.)
Counter gear snap ring thickness		
Rear	Mark A	2.80–2.85 mm (0.1102–0.1122 in.)
	Mark B	2.85–2.90 mm (0.1122–0.1142 in.)
	Mark C	2.90–2.95 mm (0.1142–0.1161 in.)
	Mark D	2.95–3.00 mm (0.1161–0.1181 in.)
	Mark E	3.00–3.05 mm (0.1181–0.1201 in.)
	Mark F	3.05–3.10 mm (0.1201–0.1220 in.)
	Mark G	3.10–3.15 mm (0.1220–0.1240 in.)
Oil seal drive in depth		
Speedometer driven gear		25 mm (0.98 in.)
Front bearing retainer (from retainer end)		11.7 ± 0.5 mm (0.461 ± 0.020 in.)
Extension housing		0 ± 0.5 mm (0 ± 0.020 in.)
Transfer adaptor		45.6 ± 0.5 mm (1.795 ± 0.020 in.)

MT030–0A

TORQUE SPECIFICATIONS

Part tightened	N·m	kgf·cm	ft·lbf
Transmission x Engine	72	730	53
Starter x Transmission	39	400	29
Engine rear mounting x Transmission	65	660	48
Rear end plate x Transmission	18	185	13
Clutch release cylinder x Transmission	12	120	9
Front exhaust pipe x TWC	48	490	35
Front exhaust pipe support bracket	44	450	33
Front exhaust pipe x Exhaust manifold	62	630	46
Crossmember x Engine rear mounting	19	190	14
Crossmember x Frame	65	660	48
Transmission x Transfer	24	240	17
Reverse shift arm bracket set bolt	18	185	13
Rear bearing retainer x Intermediate plate	18	185	13
Shift fork x Shift fork shaft	20	200	14
Straight screw plug	19	190	14
Front bearing retainer x Transmission case	17	170	12
Transmission case x Transfer adaptor	37	380	27
Transmission case x Extension housing	37	380	27
Shift lever housing set bolt	38	390	28
Clutch housing x Transmission case	36	370	27
Oil receiver x Extension housing	11	115	8
Back–up light switch	44	450	32
Restrict pin	37	380	27
Control shift lever retainer x Transfer adaptor	18	185	13
Control shift lever retainer x Extension housing	18	185	13
Filler and drain plug	37	380	27
Speedometer driven gear set bolt (2WD)	11	115	8

A43D AUTOMATIC TRANSMISSION

OPERATION ..... AT– 2
PREPARATION ..... AT– 3
TROUBLESHOOTING ..... AT– 5
ON–VEHICLE REPAIR ..... AT– 19
ASSEMBLY REMOVAL AND INSTALLATION ..... AT– 26
SHIFT LOCK SYSTEM ..... AT– 29
SERVICE SPECIFICATIONS ..... AT– 32

OPERATION

AT112-01

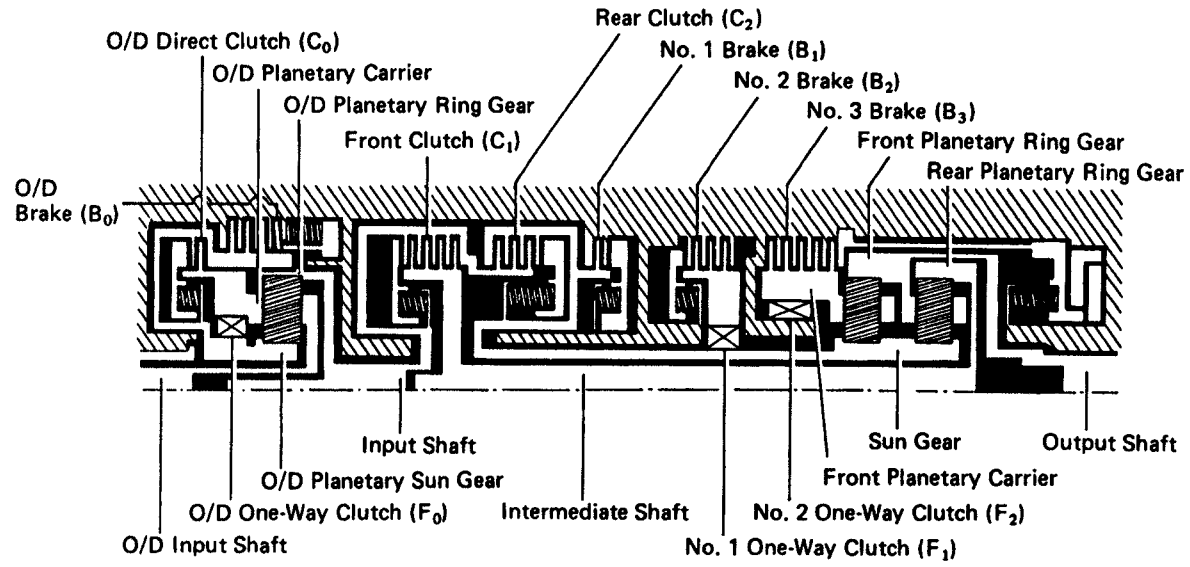

AT3283

○ ..... Operating

Shift lever position	Gear position	C_0	C_1	C_2		B_0	B_1	B_2	B_3		F_0	F_1	F_2
				I.P.	O.P.				I.P.	O.P.			
P	Parking	○							○	○	○		
R	Reverse	○		○	○				○	○	○		
N	Neutral	○									○		
D	1st	○	○								○		○
	2nd	○	○					○			○	○	
	3rd	○	○		○			○			○		
	O/D		○		○	○		○					
2	1st	○	○								○		○
	2nd	○	○				○	○			○	○	
L	1st	○	○						○	○	○		○

I.P. ..... Inner Piston
O.P. ..... Outer Piston

V00753

PREPARATION

AT01R–04

SST (SPECIAL SERVICE TOOLS)

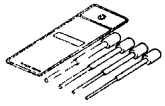	09201–10000	Valve Guide Bushing Remover & Replacer Set	Speedometer driven gear oil seal
	(09201–01080)	Valve Guide Bushing Remover & Replacer 8	
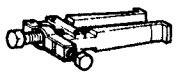	09308–10010	Oil Seal Puller	
	09325–20010	Transmission Oil Plug	
	09350–20015	TOYOTA Automatic Transmission Tool Set	
	(09397–22020)	One–way Clutch Test Tool Set	
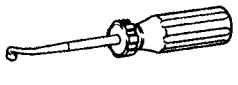	09921–00010	Spring Tension Tool	Speedometer driven gear oil seal
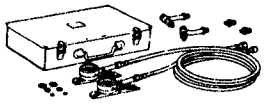	09992–00094	Automatic Transmission Oil Pressure Gauge Set	

AT0LT–03

RECOMMENDED TOOLS

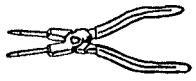	09905–00013	Snap Ring Pliers .	

AT01S–04

EQUIPMENT

Ohmmeter	
Voltmeter	
Torque wrench	
Dial indicator with magnetic base	Drive plate
Vernier calipers	Torque converter clutch
Straight edge	Torque converter clutch

AT

LUBRICANT

AT01T–05

Item	Capacity	Classification
Automatic transmission fluid Dry fill Drain and refill	6.5 liters (6.9 US qts, 5.7 Imp.qts) 2.4 liters (2.5 US qts, 2.1 Imp.qts)	ATF DEXRON® II

SSM (SPECIAL SERVICE MATERIALS)

AT01U–04

08833–00080	Adhesive 1344, THREE BOND 1344, LOCTITE 242 or equivalent	Extension housing set bolt

TROUBLESHOOTING

ATOLU–04

BASIC TROUBLESHOOTING

1. Troubles occurring with the automatic transmission can be caused by either the engine, electrical control or the transmission itself. These 3 areas should be distinguished before proceeding with troubleshooting.
2. Troubleshooting should begin with the simplest operation, working up in order of difficulty, but first determine whether the trouble lies within the engine, electrical control or transmission.
3. Proceed with the inspection as follows:

PRELIMINARY CHECK (See page AT-8)

(a) Check the tire inflation.
(b) Check the idle speed.
(c) Check the fluid level and fluid condition.
(d) Check the throttle cable mark.
(e) Check the shift linkage.
(f) Check the park/neutral position switch.

↓

STALL TEST (See page AT-12)

Check the engine and torque converter clutch.

↓

TIME LAG TEST (See page AT-13)

Check the automatic transmission (each clutch, brake and gear) for wear.

↓

HYDRAULIC TEST (See page AT-13)

Measure the line pressure and make basic check of fluid circuit.

↓

ROAD TEST (See page AT-15)

Confirm if trouble lies within automatic transmission.
If noisy or vibrating, the possible cause could be with the engine, drive shaft, tires, etc.

ELECTRONIC CONTROL SYSTEM CHECK (See page AT-10)

V06482

AT

GENERAL TROUBLESHOOTING

AT01X–08

NOTICE: Refer to A43D Automatic Transmission Repair Manual (Pub.No. RM387U) when ★ mark appears in the column for page numbers.

Problem	Possible cause	Remedy	Page
Fluid discolored or smells burnt	Fluid contaminated	Replace fluid	AT-8
	Torque converter clutch faulty	Replace torque converter clutch	AT-27
	Transmission faulty	Disassemble and inspect transmission	★
Vehicle does not move in any forward position or reverse	Manual linkage out of adjustment	Adjust linkage	AT-9
	Valve body or primary regulator faulty	Inspect valve body	★
	Parking lock pawl faulty	Inspect parking lock pawl	AT-20
	Torque converter clutch faulty	Replace torque converter clutch	AT-27
	Converter drive plate broken	Replace drive plate	AT-28
	Oil pump intake screen blocked	Clean screen	★
	Transmission faulty	Disassemble and inspect transmission	★
Shift lever position incorrect	Manual linkage out of adjustment	Adjust linkage	AT-9
	Manual valve and lever faulty	Inspect valve body	★
	Transmission faulty	Disassemble and inspect transmission	★
Harsh engagement into any drive position	Throttle cable out of adjustment	Adjust throttle cable	AT-9
	Valve body or primary regulator faulty	Inspect valve body	★
	Accumulator pistons faulty	Inspect accumulator pistons	★
	Transmission faulty	Disassemble and inspect transmission	★
Delayed 1-2, 2-3 or 3-O/D up-shift, or down-shift from O/D-3 or 3-2 then shifts back to O/D or 3	Throttle cable out of adjustment	Adjust throttle cable	AT-9
	Valve body faulty	Inspect valve body	★
	Governor body faulty	Inspect governor body	AT-24
Slips on 1-2, 2-3 or 3-O/D up-shift, or slips or shudders on acceleration	Manual linkage out of adjustment	Adjust linkage	AT-9
	Throttle cable out of adjustment	Adjust throttle cable	AT-9
	Valve body faulty	Inspect valve body	★
	Transmission faulty	Disassemble and inspect transmission	★

V06483

NOTICE: Refer to A43D Automatic Transmission Repair Manual (Pub.No. RM387U) when ★ mark appears in the column for page numbers.

Problem	Possible cause	Remedy	Page
Drag, binding or tie-up on 1-2, 2-3 or 3-O/D up-shift	Manual linkage out of adjustment Valve body faulty Transmission faulty	Adjust linkage Inspect valve body Disassemble and inspect transmission	AT-9 ★ ★
Harsh down-shift	Throttle cable out of adjustment Throttle cable and cam faulty Accumulator pistons faulty Valve body faulty Transmission faulty	Adjust throttle cable Inspect throttle cable and cam Inspect accumulator pistons Inspect valve body Disassemble and inspect transmission	AT-9 AT-19 ★ ★ ★
No down-shift when coasting	Valve body faulty Governor body faulty	Inspect valve body Inspect governor body	★ AT-24
Down-shift occurs too quickly or too late while coasting	Throttle cable faulty Valve body faulty Governor body faulty Transmission faulty	Inspect throttle cable Inspect valve body Inspect governor body Disassemble and inspect transmission	AT-9 ★ AT-24 ★
No O/D-3, 3-2 or 2-1 kick-down	Throttle cable out of adjustment Governor body faulty Valve body faulty	Adjust throttle cable Inspect governor body Inspect valve body	AT-9 AT-24 ★
No engine braking in 2 or L position	Valve body faulty Transmission faulty	Inspect valve body Disassemble and inspect transmission	★ ★
Vehicle does not hold in P	Manual linkage out of adjustment Parking lock pawl cam and spring faulty	Adjust linkage Inspect cam and spring	AT-9 AT-19

AT

V06484

AT0WC-03

PRELIMINARY CHECK

1. CHECK FLUID LEVEL

HINT:

- The vehicle must have been driven so that the engine and transmission are at normal operating temperature.
  Fluid temperature: 70–80°C (158–176 °F)
- Only use the COOL range on the dipstick as a rough reference when the fluid is replaced or the engine does not run.

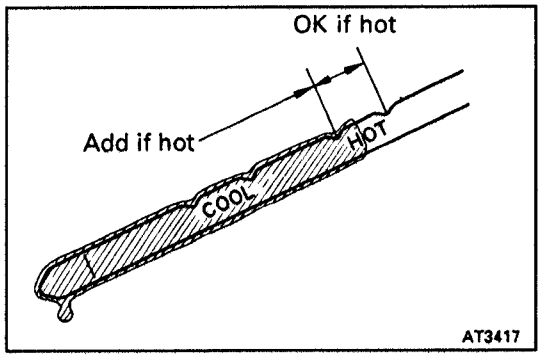

(a) Park the vehicle on a level surface, set the parking brake.

(b) With the engine idling, shift the shift lever into all positions from the P to L position and return to the P position.
NOTICE: Depress brake pedal.

(c) Pull out the transmission dipstick and wipe it clean.

(d) Push it back fully into the pipe.

(e) Pull it out and check that the fluid level is in the HOT range.
If the level is at the low side, add fluid.
Fluid type: ATF DEXRON® II
NOTICE: Do not overfill.

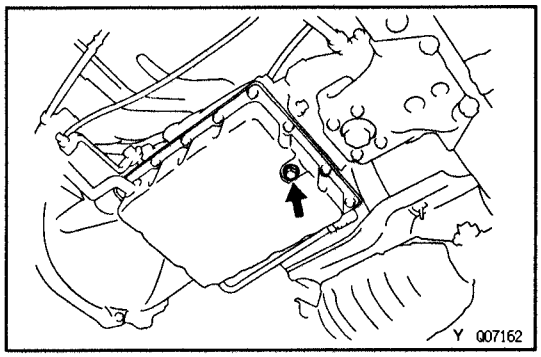

2. CHECK FLUID CONDITION

If the fluid smells burnt or is black, replace it as follows.

(a) Remove the drain plug and drain the fluid.

(b) Reinstall the drain plug securely.

(c) With the engine OFF, add new fluid through the oil filler pipe.
Fluid type: ATF DEXRON® II
Capacity:
Dry fill: 6.5 liters (6.9 US qts, 5.7 Imp.qts)
Drain and refill: 2.4 liters (2.5 US qts, 2.1 Imp.qts)

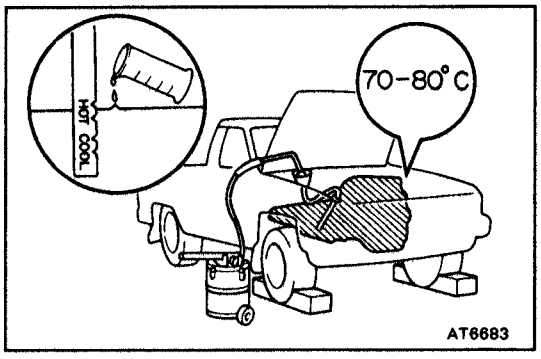

(d) Start the engine and shift the shift lever into all positions from the P to L position and then shift into the P position.

(e) With the engine idling, check the fluid level. Add fluid up to the COOL level on the dipstick.

(f) Check the fluid level with the normal operating temperature 70–80 °C (158–176 °F) and add as necessary.
NOTICE: Do not overfill.

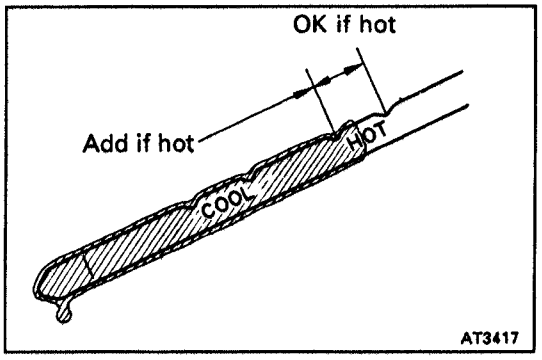

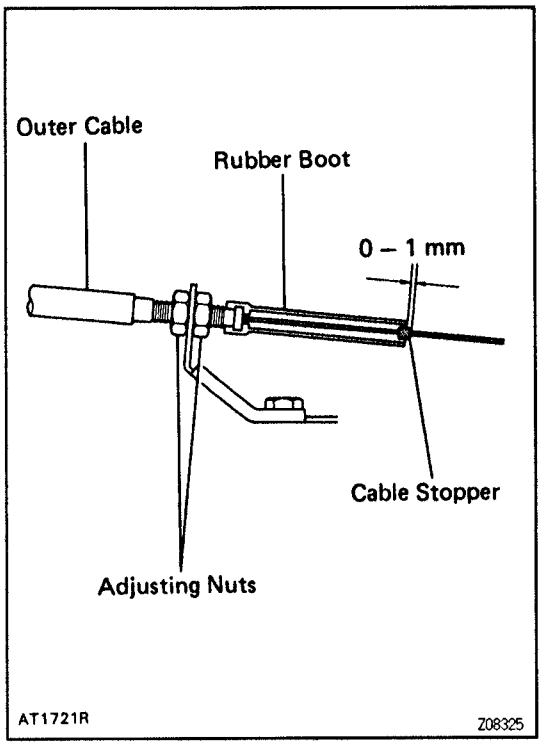

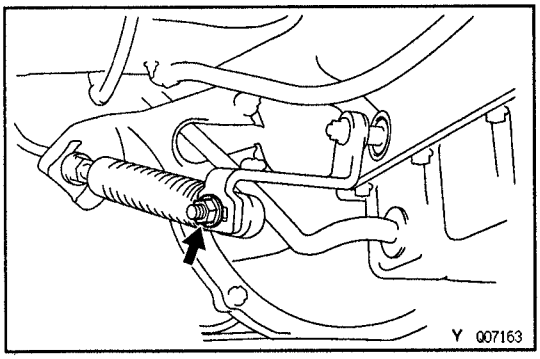

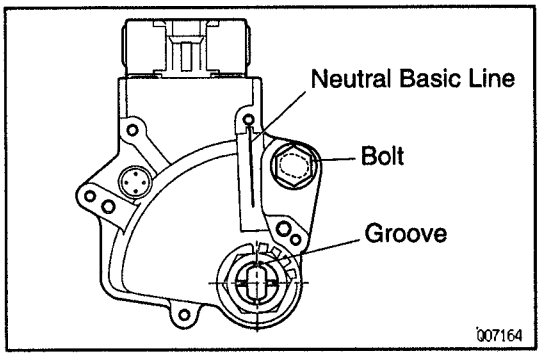

3. INSPECT AND ADJUST THROTTLE CABLE

(a) Fully depress the accelerator pedal and check that the throttle valve opens fully.
HINT: If the valve does not open fully, adjust the accelerator cable.

(b) Fully depress the accelerator pedal.

(c) Measure the distance between the end of the boot and stopper on the cable.
Standard distance: 0–1 mm (0–0.04 in.)
If the distance is not within the standard, adjust the cable by the adjusting nuts.

4. INSPECT AND ADJUST SHIFT LEVER POSITION

When shifting the shift lever from the N position to other positions, check that the lever can be shifted smoothly and accurately to each position and that the position indicator correctly indicates the position.
If the indicator is not aligned with the correct position, carry out the following adjustment procedures.

(a) Loosen the nut on the control shaft lever.

(b) Push the control shaft lever fully forward.

(c) Return the control shaft lever 2 notches to the N position.

(d) Set the shift lever to the N position.

(e) While holding the shift lever lightly toward the R position side, adjust the control shaft lever nut.

(f) Tighten the control shaft lever nut.
Torque: 13 N·m (130 kgf·cm, 9 ft·lbf)

(g) Start the engine and make sure that the vehicle moves forward when shifting the lever from the N to D position and reverse when shifting it to the R position.

5. INSPECT AND ADJUST PARK/NEUTRAL POSITION SWITCH

Check that the engine can be started with the shift lever only in the N or P position, but not in other positions.
If not as started above, carry out the following adjustment procedures.

(a) Loosen the park/neutral position switch bolt and set the shift lever to the N position.

(b) Align the groove and neutral basic line.

(c) Hold in position and tighten the bolt.
Torque: 5.4 N·m (55 kgf·cm, 48 in.·lbf)

6. INSPECT IDLE SPEED

Idle speed: 700 ± 50 rpm (In N position and A/C OFF)

AT

AT0X2-02

ELECTRONIC CONTROL SYSTEM

ELECTRONIC CONTROL COMPONENTS

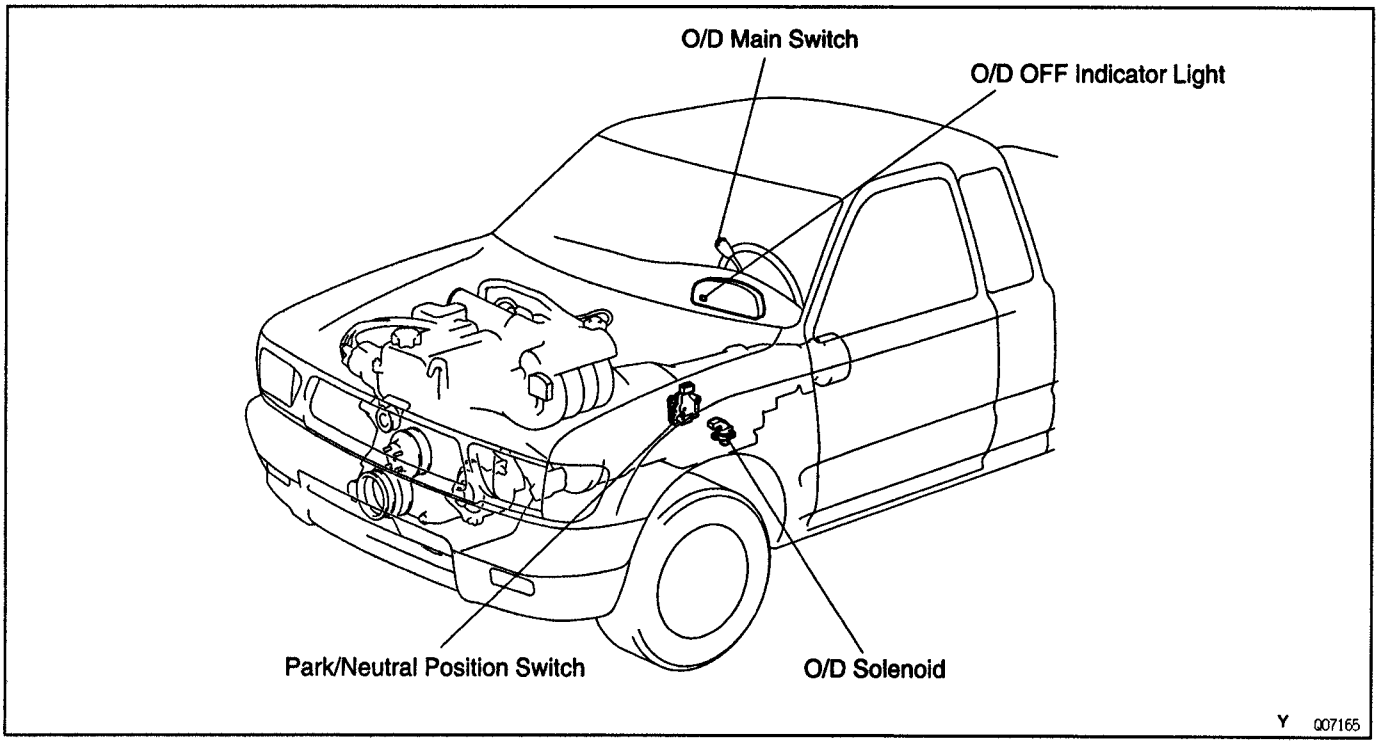

AT

ELECTRONIC CONTROL CIRCUIT

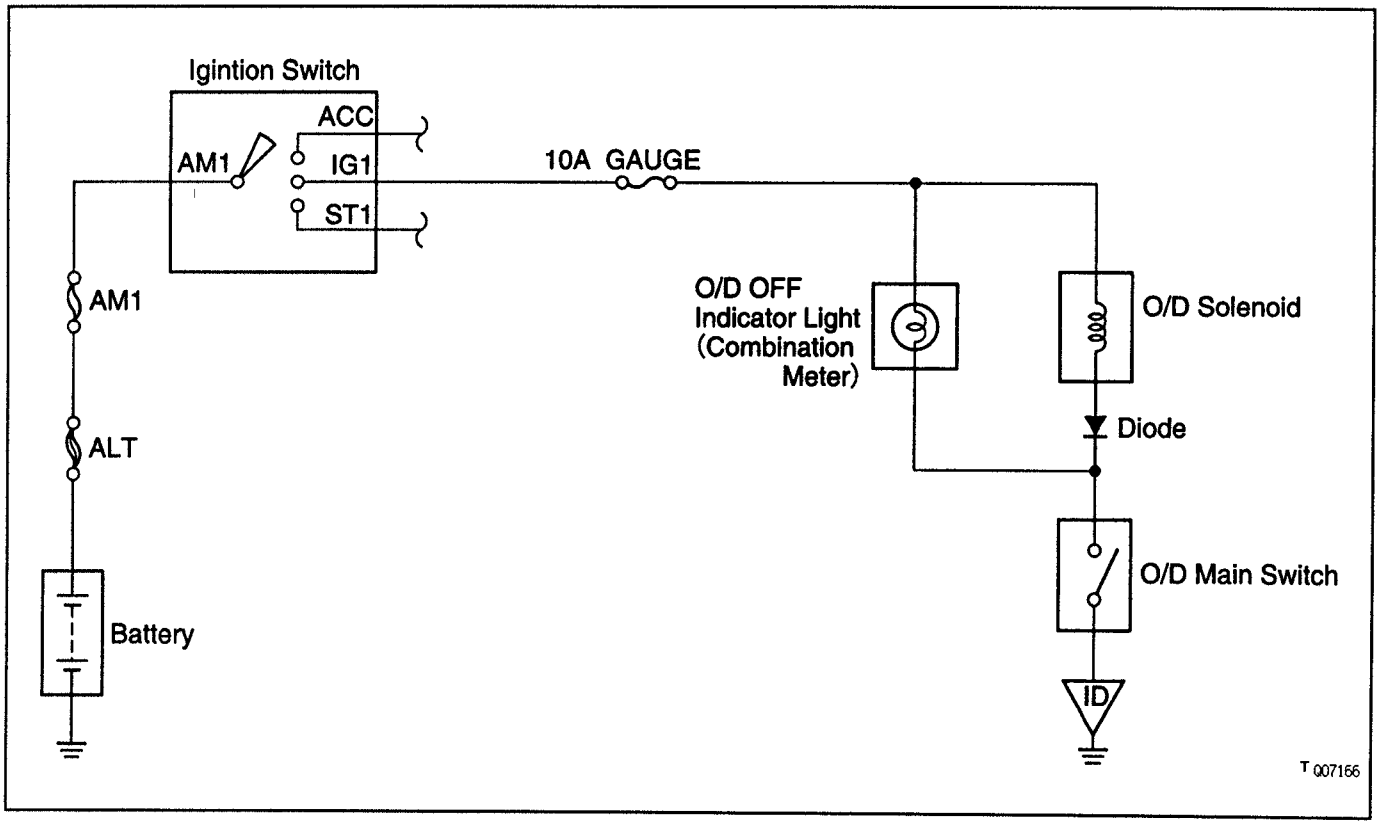

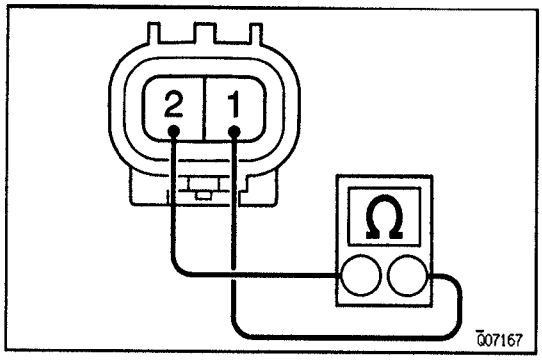

AT0X8-02

ELECTRIC CONTROL COMPONENTS INSPECTION

1. INSPECT O/D SOLENOID

(a) Using an ohmmeter, measure the resistance between terminals.
Resistance: 11–15 Ω

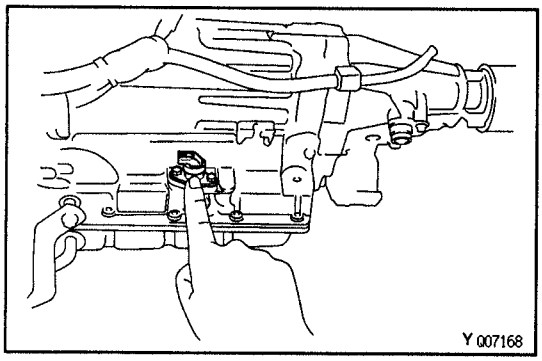

(b) Apply battery positive voltage to the solenoid. Check that the solenoid operation sound is heard.

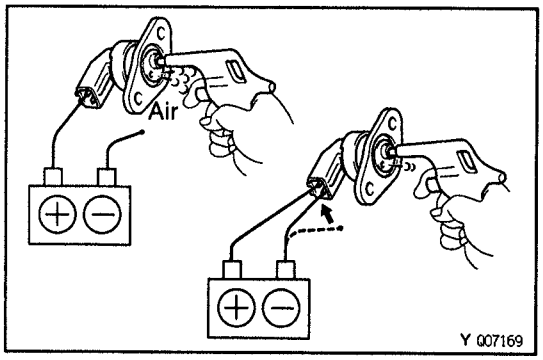

2. CHECK SOLENOID SEALS

If there is foreign material in the solenoid valve, there will be no fluid control even with solenoid operation.

(a) Check that the solenoid valve opens when low–pressure compressed air is applied.

(b) When supplying battery positive voltage to the solenoid, check that the solenoid valve does not leak air.

AT

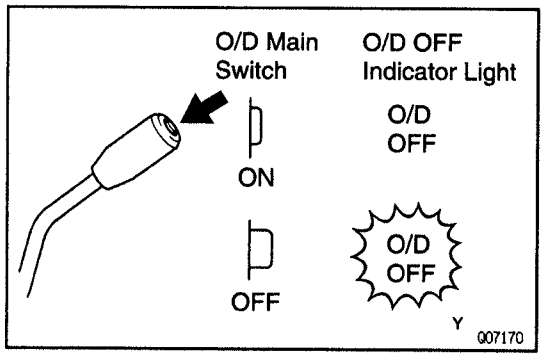

3. INSPECT "O/D OFF" INDICATOR LIGHT

(a) Turn on the ignition switch.

(b) Check that the "O/D OFF" indicator light does not light, when the O/D main switch is turned ON.

(c) Check that the "O/D OFF" indicator lights, when the O/D main switch is turned OFF.

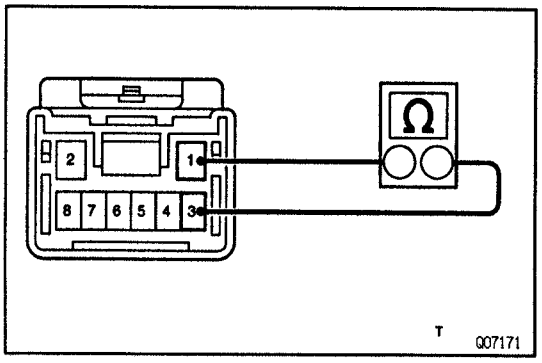

4. INSPECT O/D MAIN SWITCH

(a) Remove the lower finish panel.

(b) Using an ohmmeter, check the continuity of the terminals for each switch position.

Switch position	Tester condition to terminal number	Specified value
ON	1 – 3	Continuity
OFF	1 – 3	No continuity

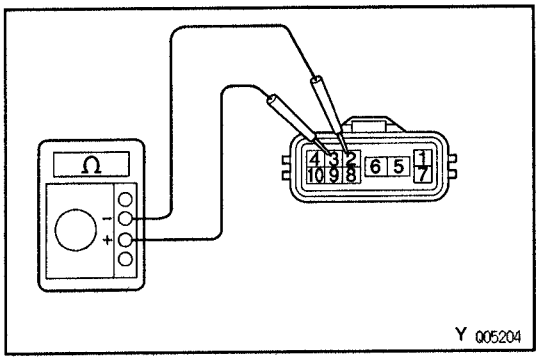

5. INSPECTION PARK/NEUTRAL POSITION SWITCH

Inspect that there is continuity between each terminals.

Shift Position \ Terminal	6	5	4	7	8	10	9	2	3
P	○	○	○	○					
R			○		○				
N	○	○	○			○			
D			○				○		
2			○					○	
L			○						○

V06485

AT113-01

STALL TEST

The objective of this test is to check the overall performance of the transmission and engine by measuring the maximum engine speeds in the D and R positions.

NOTICE:

- **Do the test at normal operating fluid temperature 50–80 °C (122–176 °F).**
- **Do not continuously run this test longer than 5 seconds.**
- **To ensure safety, conduct this test in a wide, clear, level area which provides good traction.**

AT

MEASURE STALL SPEED

(a) Chock the 4 wheels and fully apply the parking brake.

(b) Connect OBD II scan tool or TOYOTA hand–held tester to DLC3.

(c) Keep your left foot pressed firmly on the brake pedal, and start the engine.

(d) Shift into the D position. Fully depress the accelerator pedal with your right foot. Quickly read the stall speed at this time.
Stall speed: 1,850±150 rpm

(e) Do the same test in the R position.
Stall speed: 1,850±150 rpm

EVALUATION

Problem	Possible cause
(a) Stall speed low in D and R positions.	• Engine output may be insufficient • Stator one–way clutch is not operating properly HINT: If the engine speed is more than 600 rpm below the specified value, the torque converter clutch could be faulty.
(b) Stall speed high in D position.	• Line pressure too low • Front clutch slipping • No.2 one–way clutch not operating properly • O/D one–way clutch not operating properly
(c) Stall speed high in R position.	• Line pressure too low • Rear clutch slipping • No.3 brake slipping • O/D one–way clutch not operating properly
(d) Stall speed high in D and R positions.	• Line pressure too low • Improper fluid level • O/D one–way clutch not operating properly

AT114-01

TIME LAG TEST

When the shift lever is shifted while the engine is idling, there will be a certain time lapse or lag before the shock can be felt. This is used for checking the condition of the O/D direct clutch, front clutch, rear clutch and No.3 brake.

NOTICE:

- **Do the test at normal operating fluid temperature 50–80 (122–176 °F).**
- **Be sure to allow 1 minute interval between tests.**
- **Take 3 measurements and take the average value.**

MEASURE TIME LAG

(a) Fully apply the parking brake.

(b) Start the engine and check the idle speed.
Idle speed: 700 ± 50 rpm (In N position and A/C OFF)

(c) Shift the shift lever from the N to D position. Using a stop watch, measure the time it takes from shifting the lever until the shock is felt.
Time lag: Less than 1.2 seconds

(d) In same way, measure the time lag for N→R.
Time lag: Less than 1.5 seconds

EVALUATION

If N→D or N→R time lag are longer than specified:

Problem	Possible cause
N→D time lag is longer	• Line pressure too low • Front clutch worn • O/D one–way clutch not operating properly
N→R time lag is longer	• Line pressure too low • Rear clutch worn • No.3 brake worn • O/D one–way clutch not operating properly

AT

AT115-01

HYDRAULIC TEST

PREPARATION

(a) Warm up the transmission fluid.

(b) Remove the transmission case test plug and connect SST.
SST 09992–00094 (09992–00111, 09992–00270)
(See page AT–26 for the location to connect SST)
NOTICE: Do the test at normal operating fluid temperature 50–80 (122–176 °F).

1. MEASURE LINE PRESSURE

(a) Fully apply the parking brake and chock the 4 wheels.

(b) Start the engine and check the idle speed.

(c) Shift into the D position, keep your left foot pressed firmly on the brake pedal and while modulating the accelerator pedal with the right foot, measure the line pressure at the engine speeds specified in the table.

(d) In the same way, do the test in the R position.

Line pressure	D position kPa (kgf/cm², psi)	R position kPa (kgf/cm², psi)
Idling	441–500 (4.5–5.1, 64–73)	667–745 (6.8–7.6, 97–108)
Stall	990–1,167 (10.1–11.9, 144–169)	1,471–1,863 (15.0–19.0, 213–270)

If the measured pressure are not up to the specified value, recheck the throttle cable adjustment and retest.

EVALUATION

Problem	Possible cause
If the measured values at all positions are higher.	• Throttle cable out of adjustment • Throttle valve defective • Regulator valve defective
If the measured values at all positions are lower.	• Throttle cable out of adjustment • Throttle valve defective • Regulator valve defective • Oil pump defective • O/D direct clutch defective
If pressure is low in the D position only.	• D position circuit fluid leakage • Front clutch defective
If pressure is low in the R position only.	• R position circuit fluid leakage • No.3 brake defective • Rear clutch defective

2. MEASURE GOVERNOR PRESSURE

(a) Warm up the transmission fluid.

(b) Remove the transmission case test plug and connect SST.
SST 09992–00094 (09992–00111, 09992–00270)
(See page AT–26 for the location to connect SST)
NOTICE: Do the test at normal operating fluid temperature 50–80°C (122–176 °F).

(c) Check the parking brake to see that it is not applied.

(d) Start the engine.

(e) Shift into the D position and measure the governor pressure at the speeds specified in the table.

EVALUATION

Problem	Possible cause
If governor pressure is defective.	• Line pressure defective • Fluid leakage in governor pressure circuit • Governor valve operation defective

Tire size: P195/75R14

Output shaft rpm	*Vehicle speed km/h (mph)	Governor pressure kPa (kgf/cm², psi)
1,000	32 (20)	98–157 (1.0–1.6, 14–23)
1,800	57 (35)	196–255 (2.0–2.6, 28–37)
3,500	111 (69)	500–618 (5.1–6.3, 73–90)

Tire size: P215/70R14

Output shaft rpm	*Vehicle speed km/h (mph)	Governor pressure kPa (kgf/cm², psi)
1,000	32 (20)	98–157 (1.0–1.6, 14–23)
1,800	58 (36)	196–255 (2.0–2.6, 28–37)
3,500	113 (70)	500–618 (5.1–6.3, 73–90)

*:Reference only

AT116-01

ROAD TEST

NOTICE: Do this test at normal fluid temperature 50–80 °C (122–176 °F).

1. D POSITION TEST

Shift into the D position and while driving with the accelerator pedal held constant with the throttle valve fully open and the O/D main switch ON, check on the following points.

(a) Check to see that the 1–2, 2–3 and 3–O/D up–shifts take place and also that the shift points conform to those shown in the automatic shift schedule.
HINT: 3→O/D up–shift does not take place with a throttle valve opening of more than 86 % or engine coolant temperature below 55 °C (122 °F).

EVALUATION

Problem	Possible cause
If there is no 1–2 up–shift.	• Governor valve is defective • 1–2 shift valve is stuck
If there is no 2–3 up–shift.	• 2–3 shift valve is stuck
If there is no 3–O/D up–shift (throttle valve opening less than 86%).	• 3–4 shift valve is stuck • Solenoid valve or circuit defective
If the shift point is defective.	• Throttle cable out of adjustment • Throttle valve, 1–2 shift valve, 2–3 shift valve, 3–4 shift valve etc., are defective

(b) In the same way, check the shock and slip at 1→2, 2→3 and 3→O/D up–shifts.

EVALUATION

Problem	Possible cause
If the shock is excessive.	• Line pressure is too high • Accumulator is defective

(c) Run in the 3rd gear or O/D of the D position and check for abnormal noise and vibration.
HINT: This check must be made with extreme care as noise and vibration could also be due to unbalance in the propeller shaft, differential, tires, torque converter clutch, etc.

(d) While running in the D position, 2nd, 3rd and O/D gears, check to see that the possible vehicle speed limits for 2→1, 3→2 and O/D→3 kick–downs conform to those indicated on the automatic shift schedule.
HINT: O/D→3 kick–down is always possible with a throttle valve opening of more than 86 %.

(e) Check for abnormal shock and slip at kick–down.

2. 2 POSITION TEST

Shift into the 2 position and check on the following points while driving with the accelerator pedal held constantly at the fully throttle valve opening position.

(a) Check to see that the 1→2 up–shift takes place and that the shift point conforms to that shown on the automatic shift schedule.

(b) While running in the 2 position of the 2nd gear, release the accelerator pedal and check the engine braking effect.

EVALUATION

Problem	Possible cause
If there is no engine braking effect.	• No.1 brake is defective

AT

(c) Check for abnormal noise during acceleration and deceleration and for shock during up–shift and down–shift.

3. L POSITION TEST

(a) While running in the L position, check to see that there is no up–shift to 2nd gear.

(b) While running in the L position, release the accelerator pedal and check the engine braking effect.

EVALUATION

Problem	Possible cause
If there is no engine braking effect.	• No.3 brake is defective

(c) Check for abnormal noise during acceleration and deceleration.

4. R POSITION TEST

Shift into the R position and check for slipping while starting at wide open throttle.

CAUTION: Before conducting this test, ensure that the test area is free from personnel and obstruction.

5. P POSITION TEST

Stop the vehicle on a gradient (more than 5°) and after shifting into the P position, release the parking brake.

Then check that the parking lock pawl holds the vehicle in place.

AT09P–05

TROUBLESHOOTING MATRIX CHART

Use the table below to help you find the cause of the problem. The numbers indicate the priority of the likely cause of the problem. Check each part in order. If necessary, replace these parts.
NOTICE: Refer to A43D Automatic Transmission Repair Manual (Pub.No. RM387U) when ★ mark appears in the column for page numbers.

(ON-VEHICLE)

See Page / Parts Name / Trouble		AT-20	AT-24	★	★	★	★	★	★	★	★	★	★	★	★	★	★	★	AT-10	AT-18
		Parking lock pawl	Governor valve	1-2 Shift valve	2-3 Shift valve	3rd coast shift valve	Intermediate shift valve	Throttle valve	Primary regulator valve	Down shift plug	Reverse clutch sequence valve	Low coast shift valve	C_1 accumulator	C_2 accumulator	B_2 accumulator	Detent regulator valve	Manual valve	3-4 Shift valve	Electrical control system check	Off-vehicle repair matrix chart
Does not move in any forward position																				1
Does not move in reverse position																				1
Does not move in any forward position or reverse position		1							3								2			4
No up-shift	1st → 2nd		1	2																3
	2nd → 3rd		1		2															3
	3rd → O/D		1															2	3	4
No down-shift	O/D → 3rd					5		2		3						4		6	1	
	3rd → 2nd				4			1		2						3				
	2nd → 1st			4				1		2						3				
Shift point too high or too low			1	4	4			3	2									4		
Up-shift 3rd → O/D with O/D main switch OFF		1				2														
Harsh engagement	"N" → "R"										2			1						3
	"N" → "D"												1							2
	"N" → "L"			1								2								3
	1st → 2nd ("D" position)														1					2
	1st → 2nd ("2" position)						2								1					3
	1st → 2nd → 3rd → O/D							1	2											
	2nd → 3rd													1						2
	3rd → O/D																			1
	O/D → 3rd																			1
	3rd → 2nd													1						2
Slip	Forward & Reverse								1											2
	"R"																			1
	1st																			1
	2nd																			1
	3rd																			1
	O/D																			1
No engine braking	1st ("L" position)																			1
	2nd ("2" position)																			1
No kick-down				4	4			1		2						3		4		
Poor acceleration																				1

AT

V06486

NOTICE: Refer to A43D Automatic Transmission Repair Manual (Pub.No. RM387U) when ★ mark appears in the column for page numbers.

(OFF-VEHICLE)

See Page		AT-27	★	★	★	★	★	★	★	★	★	★	★	★	★	★
Parts Name / Trouble		Torque converter clutch	Oil pump	O/D direct clutch (Co)	Front clutch (C_1)	Rear clutch (C_2)	O/D brake (B_0)	No. 1 brake (B_1)	No. 2 brake (B_2)	No. 3 brake (B_3)	No. 1 one-way clutch (F_1)	No. 2 one-way clutch (F_2)	O/D one-way clutch (F_0)	Front planetary gear	Rear planetary gear
Does not move in any forward position					1										
Does not move in reverse position						1				2					
Does not move in any forward position or reverse position		1	2	3									4	5	6
No-up shift	1st → 2nd								1		2				
	2nd → 3rd					1									
	3rd → O/D						1								
Harsh engagement	"N" → "R"					1				2					
	"N" → "D"				1										
	"N" → "L"									1					
	1st → 2nd ("D" position)								1						
	1st → 2nd ("2" position)							1	2						
	2nd → 3rd					1									
	3rd → O/D						1								
	O/D → 3rd			1											
	3rd → 2nd								1						
Slip	Forward & Reverse	2	3	1									4		
	"R" position			1		2				3			4		
	1st			1	2							4	3		
	2nd			1	2				3		5		4		
	3rd			1	2	3			4				5		
	O/D				1	2	3								
No engine braking	1st ("L" position)									1					
	2nd ("2" position)							1							
Poor acceleration		1													

V06487

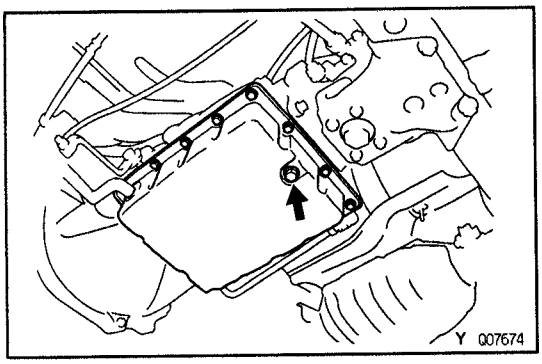

ON–VEHICLE REPAIR

AT117–01

VALVE BODY REMOVAL

1. **DRAIN ATF**
   Torque: 20 N·m (205 kgf·cm, 15 ft·lbf)
2. **REMOVE OIL PAN, FILLER PIPE AND GASKET**
   Remove all pan bolts, and carefully remove the pan assembly. Discard the gasket.
   Torque: 5.4 N·m (55 kgf·cm, 48 in.·lbf)
   REMOVAL NOTICE: Some fluid will remain in the oil pan. Be careful not to damage the filler pipe.
   INSTALLATION HINT: Replace used gasket with a new one.

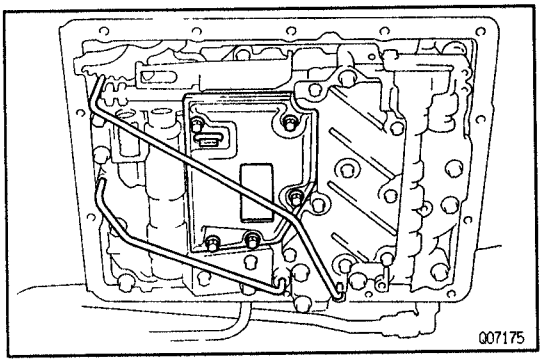

3. **REMOVE OIL PIPES**
   Pry up both pipe ends with a large screwdriver and remove the 2 pipes.
   INSTALLATION NOTICE: Be careful not to bend or damage the pipes.
4. **REMOVE OIL STRAINER**
   Remove the 5 bolts, and the oil strainer.
   Torque: 5.4 N·m (55 kgf·cm, 48 in.·lbf)
   REMOVAL NOTICE: Be careful as some oil will come out with the filter.
5. **REMOVE VALVE BODY**

(a) Remove the 17 bolts.
Torque: 10 N·m (100 kgf·cm, 7 ft·lbf)

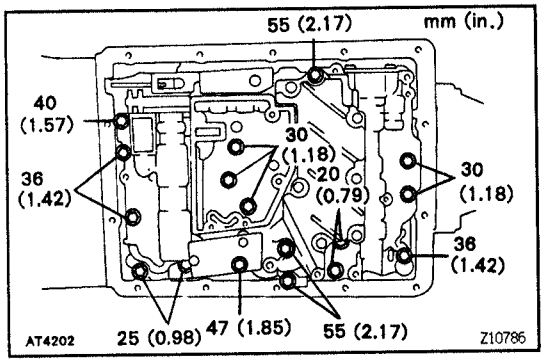

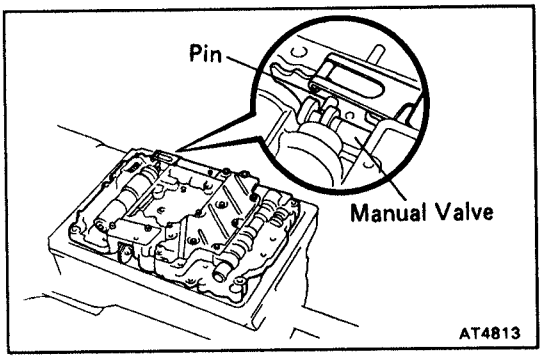

INSTALLATION HINT: Align the groove of the manual valve to the pin of the lever.

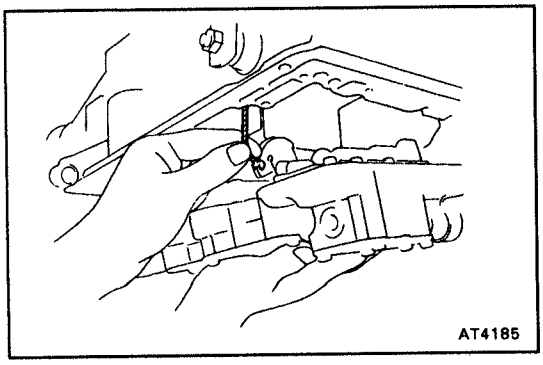

(b) Disconnect the throttle cable from the cam and remove the valve body.

AT

VALVE BODY INSTALLATION

AT118–01

Installation is in the reverse order of removal.
INSTALLATION HINT: After installation, fill ATF and check fluid level. (See page AT–8)

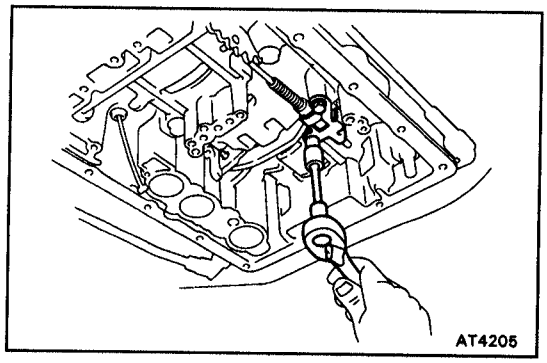

PARKING LOCK PAWL REMOVAL

AT02A–04

1. **REMOVE VALVE BODY (See page AT–19)**
2. **REMOVE PARKING LOCK PAWL BRACKET**
   INSTALLATION HINT:
   - Push lock rod fully forward.
   - Check that the pawl operates smoothly.

   Torque: 7.4 N·m (75 kgf·cm, 65 in.·lbf)

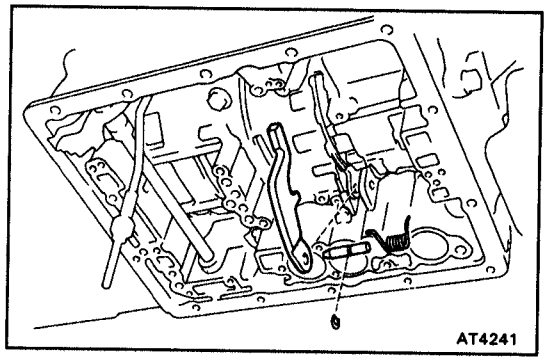

3. **REMOVE SPRING FROM PARKING LOCK PAWL PIVOT PIN**
4. **REMOVE PIVOT PIN AND PARKING LOCK PAWL**

PARKING LOCK PAWL INSTALLATION

AT119–01

Installation is in the reverse order of removal.

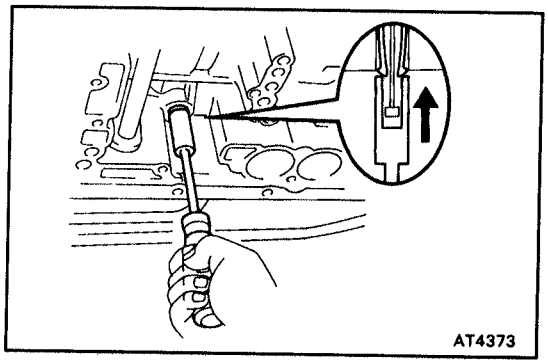

THROTTLE CABLE REMOVAL

AT11H–01

1. **DISCONNECT THROTTLE CABLE**
(a) Disconnect the cable from the throttle linkage.
(b) Disconnect the cable from the cable clamps.
2. **REMOVE VALVE BODY (See page AT–19)**
3. **PUSH THROTTLE CABLE OUT OF TRANSMISSION CASE**
   Using a 10–mm socket, push the throttle cable out.

AT11B–01

THROTTLE CABLE INSTALLATION

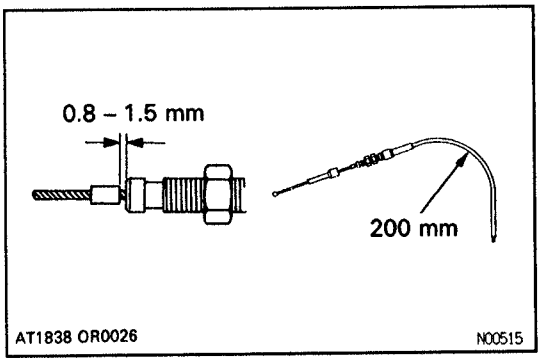

Installation is in the reverse order of removal.
INSTALLATION HINT:

- If throttle cable is new, stake stopper on inner cable.

(a) Bend the cable so there is a radius of about 200 mm (7.87 in.).
(b) Pull the inner cable lightly until a slight resistance is felt, and hold it.
(c) Stake the stopper 0.8–1.5 mm (0.031–0.059 in.) from the end of outer cable, as shown.

- After installation, fill ATF and check the fluid level. (See page AT–8)
- Adjust the throttle cable. (See page AT–9)

AT0XB–02

SPEEDOMETER DRIVEN GEAR REPLACEMENT

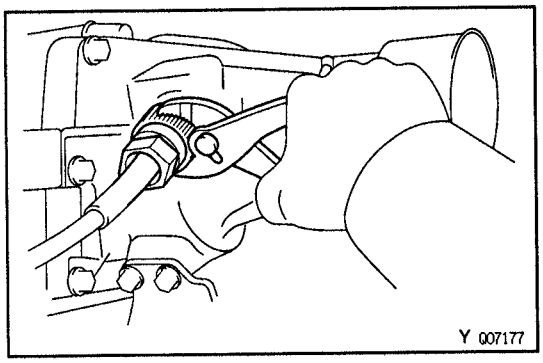

1. DISCONNECT SPEEDOMETER CABLE AND REMOVE SPEEDOMETER DRIVEN GEAR

(a) Loosen the serrated collar with pliers. Do not lose the felt dust protector and washer.
(b) Disconnect the speedometer cable.

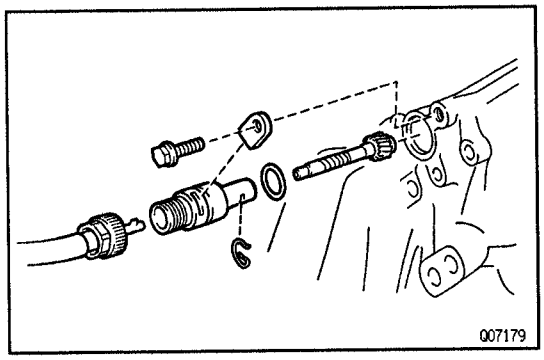

(c) Remove the bolt and locking plate. Pry out the speedometer driven gear assembly.
(d) Remove the O–ring from the speedometer drive gear assembly.
(e) Remove the clip and speedometer driven gear from the speedometer driven gear sleeve.

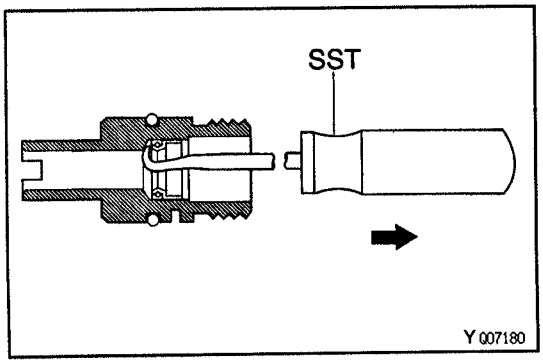

2. REMOVE SPEEDOMETER DRIVEN GEAR OIL SEAL
Using SST, remove the oil seal.
SST 09921–00010

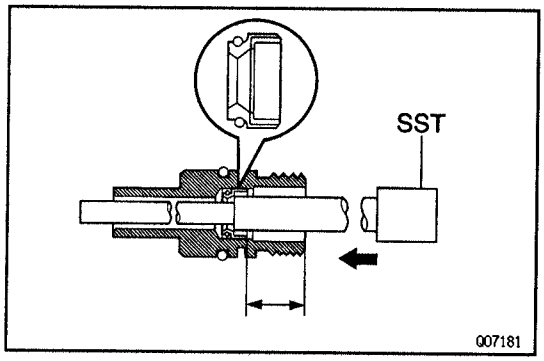

3. INSTALL SPEEDOMETER DRIVEN GEAR OIL SEAL

Using SST, install a new oil seal.

SST 09201–10000 (09201–01080)

Drive in depth: 20 mm (0.79 in.)

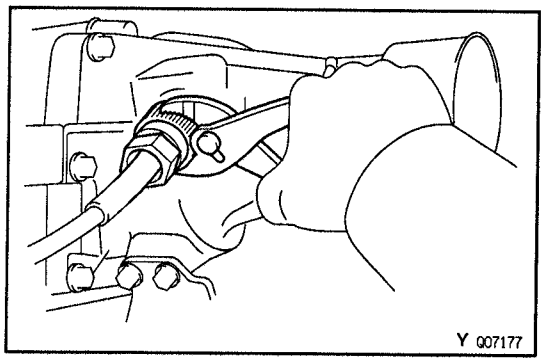

4. INSTALL SPEEDOMETER DRIVEN GEAR AND CONNECT SPEEDOMETER CABLE

(a) Install the clip and speedometer driven gear to the speedometer driven gear sleeve.
(b) Install a new O–ring to the speedometer driven gear assembly.
(c) Install the speedometer driven gear.
(d) Install the locking plate with the bolt.
(e) Connect the speedometer cable.
(f) Tighten the serrated collar with pliers.

AT

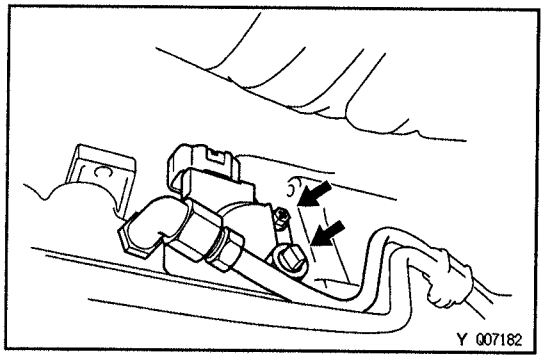

PARK/NEUTRAL POSITION SWITCH REPLACEMENT

AT0X6–02

1. REMOVE FRONT EXHAUST PIPE AND HEAT INSULATOR

2. DISCONNECT OIL COOLER PIPE

(a) Remove the 3 oil cooler pipe clamps.
(b) Disconnect the oil cooler pipe.

3. REMOVE ELBOW AND O–RING

4. REMOVE PARK/NEUTRAL POSITION SWITCH

(a) Disconnect the connector.
(b) Pry off the lock washer and remove the nut.
(c) Remove the bolt and park/neutral position switch.

5. INSTALL PARK/NEUTRAL POSITION SWITCH

(a) Install the park/neutral position switch and bolt.
Torque: 5.4 N·m (55 kgf·cm, 48 in.·lbf)
(b) Install a new lock plate and the nut.
Torque: 3.9 N·m (40 kgf·cm, 35 in.·lbf)
(c) Stake the nut with lock plate.
(d) Adjust the park/neutral position switch.
(See page AT–9)
(e) Connect the connector.

6. INSTALL ELBOW AND NEW O–RING

Torque: 34 N·m (350 kgf·cm, 25 ft·lbf)

7. CONNECT OIL COOLER PIPES

(a) Connect the oil cooler pipe.
Torque: 34 N·m (350 kgf·cm, 25 ft·lbf)
(b) Install the 3 oil cooler pipe clamps.

8. **INSTALL FRONT EXHAUST PIPE AND HEAT INSULATOR**

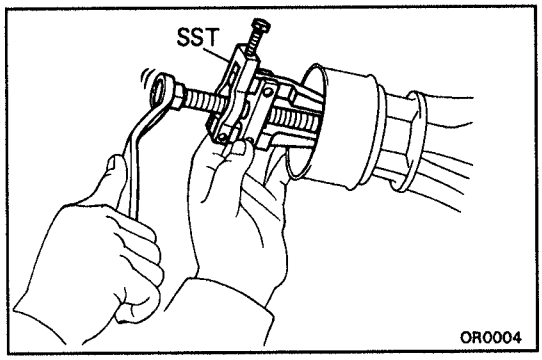

EXTENSION HOUSING OIL SEAL REPLACEMENT

AT0UJ–09

1. **REMOVE PROPELLER SHAFT (See page PR–6)**
2. **REMOVE REAR OIL SEAL**
   Using SST, remove the oil seal.
   SST 09308–10010
   NOTICE: Clean the extension housing before removing the oil seal.

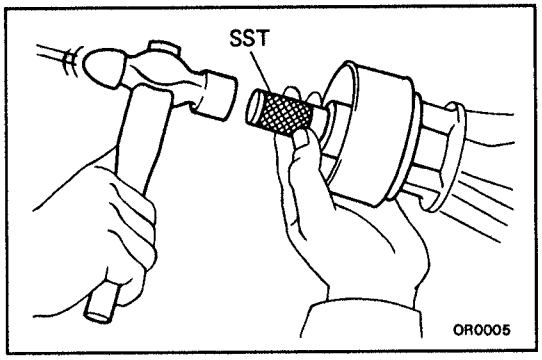

3. **INSTALL NEW OIL SEAL**
   Coat the lip of a new oil seal with MP grease and using SST and a hammer, carefully drive the oil seal in as far as it will go.
   SST 09325–20010
4. **INSTALL PROPELLER SHAFT (See page PR–14)**
5. **CHECK FLUID LEVEL (See page AT–8)**

AT

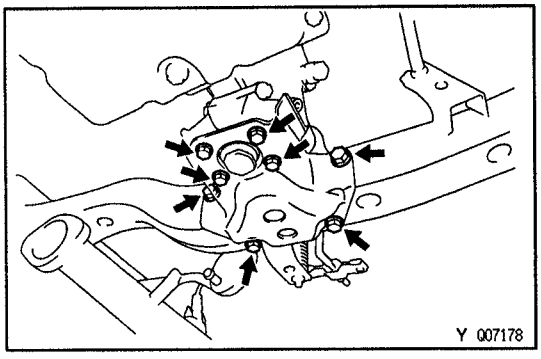

EXTENSION HOUSING REMOVAL

AT11C–01

1. **REMOVE PROPELLER SHAFT (See page PR–6)**
2. **DISCONNECT SPEEDOMETER CABLE AND REMOVE SPEEDOMETER DRIVEN GEAR (See page AT–21)**
3. **REMOVE REAR MOUNTING BRACKET FROM REAR SUPPORT MEMBER**
   Remove the 8 bolts from the rear mounting bracket.
   Torque:
   Rear mounting side: 18 N·m (185 kgf·cm, 13 ft·lbf)
   Frame side: 58 N·m (590 kgf·cm, 42 ft·lbf)

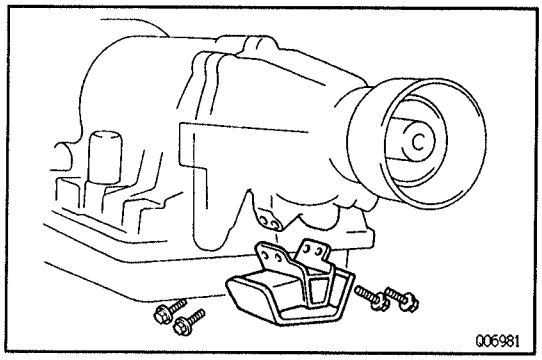

4. REMOVE REAR MOUNTING INSULATOR FROM EXTENSION HOUSING

Remove the 4 bolts and the engine rear mounting insulator from the extension housing.

Torque: 25 N·m (260 kgf·cm, 19 ft·lbf)

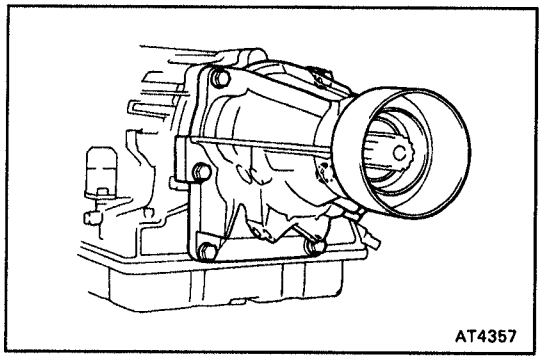

5. REMOVE EXTENSION HOUSING AND GASKET

Remove the 6 bolts. If necessary, tap the extension housing with a plastic hammer or block of wood to loosen it.

Torque: 34 N·m (345 kgf·cm, 25 ft·lbf)

INSTALLATION HINT:

- Replace used gasket with a new one.
- Coat the threads of the all bolts with sealant.
- The 2 lower bolts are shorter.

Sealant: Part No. 08833–00080, THREE BOND 1344, LOCTITE 242 or equivalent

EXTENSION HOUSING INSTALLATION

AT11D–01

AT

Installation is in the reverse order of removal.

INSTALLATION HINT: After installation, fill ATF and check fluid lever. (See page AT–8)

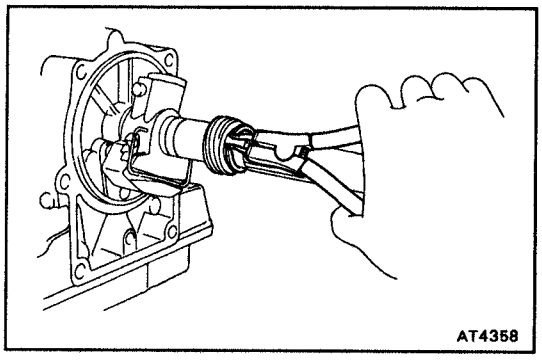

GOVERNOR BODY REMOVAL

AT0X7–02

1. REMOVE EXTENSION HOUSING (See page AT–23)

2. REMOVE SPEEDOMETER DRIVE GEAR

(a) Using snap ring pliers, remove the snap ring.

(b) Slide off the speedometer drive gear.

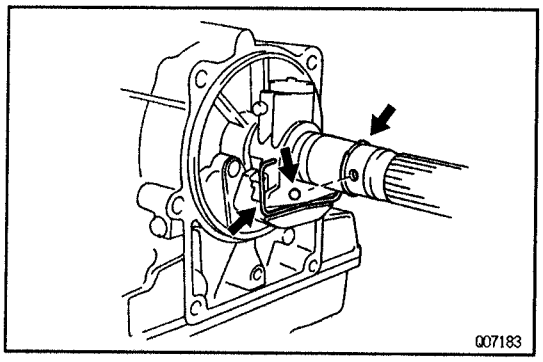

(c) Remove the lock ball and outer snap ring.

3. REMOVE GOVERNOR FROM OUTPUT SHAFT

(a) Using a large screwdriver, remove the retaining clip.

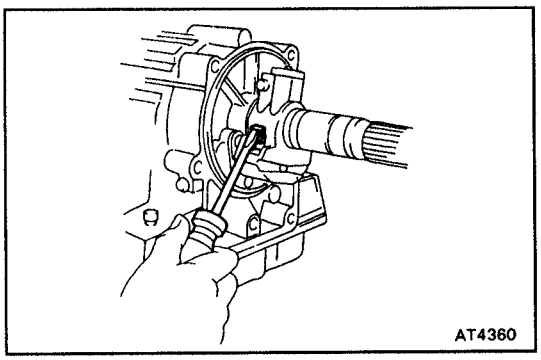
AT4360

(b) Using a screwdriver unstake the lock plate, remove the bolt and lock plate.
Torque: 3.9 N·m (40 kgf·cm, 35 in.·lbf)

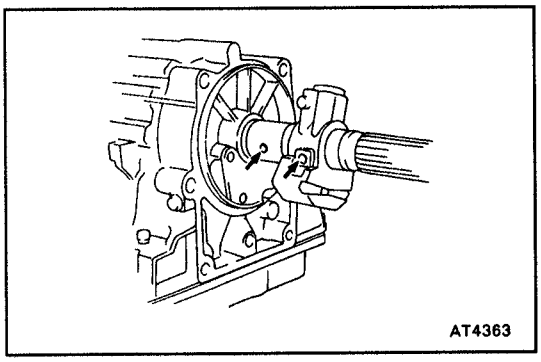
AT4363

4. REMOVE GOVERNOR BODY
Remove the governor body from output shaft.
INSTALLATION HINT: Align the governor body and bolt hole on the output shaft.

AT11E–01

GOVERNOR BODY INSTALLATION

Installation is in the reverse order of removal.

ASSEMBLY REMOVAL AND INSTALLATION

COMPONENTS

AT11F-01

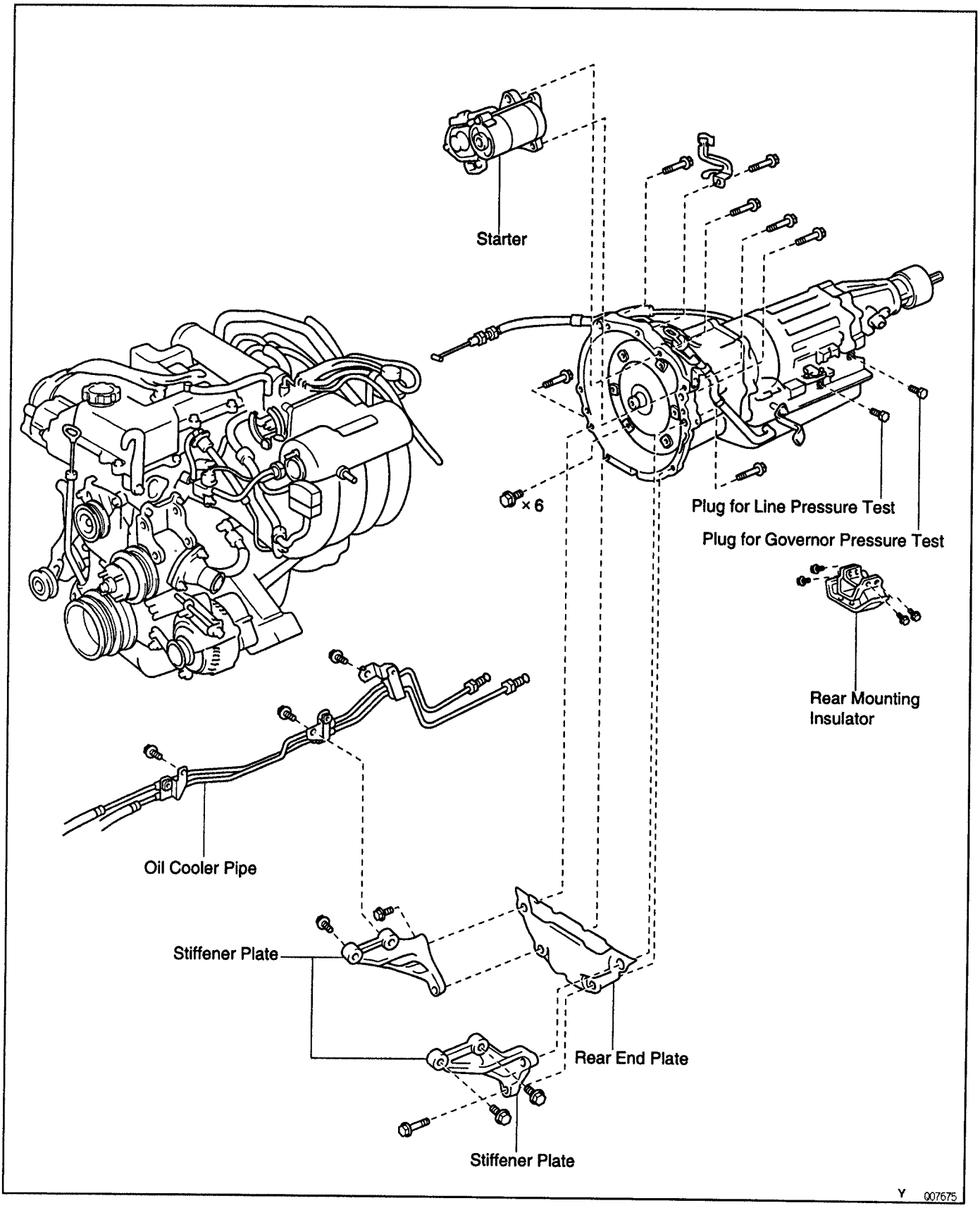

AT

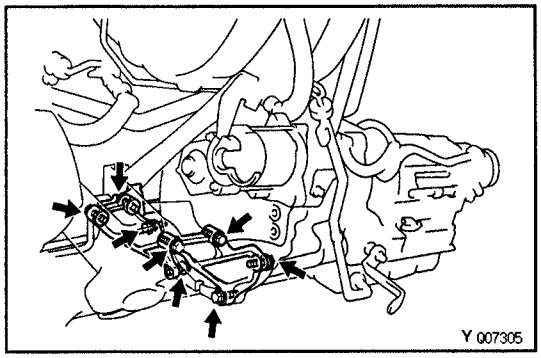

MT028–07

TRANSMISSION REMOVAL

1. **REMOVE TRANSMISSION WITH ENGINE**
(See page 2RZ–FE, 3RZ–FE EG–61)
2. **REMOVE LEFT AND RIGHT SIDE STIFFENER PLATES**

(a) Remove the 8 bolts, 2 stiffener plates and rear end plate.
Torque: 37 N·m (380 kgf·cm, 27 ft·lbf)

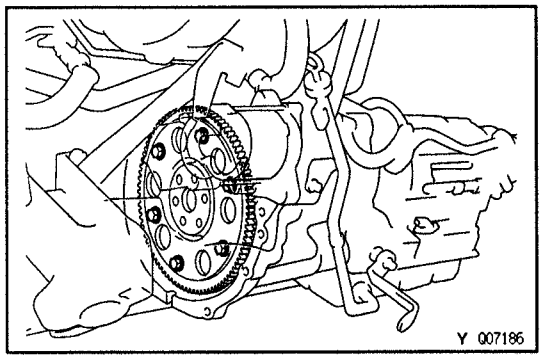

(b) Turn the crankshaft to gain access and remove the 6 bolts with holding the crankshaft pulley set bolt a wrench.
Torque: 41 N·m (420 kgf·cm, 30 ft·lbf)

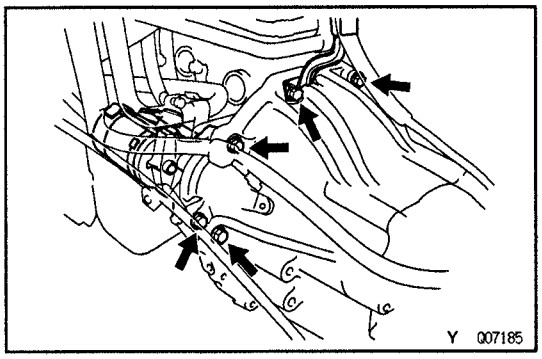

3. **REMOVE STARTER**
Remove the 2 bolts and starter.
Torque: 39 N·m (400 kgf·cm, 29 ft·lbf)
4. **REMOVE TRANSMISSION FROM ENGINE**

(a) Remove the 3 transmission mounting bolts from the engine.
Torque: 71 N·m (730 kgf·cm, 53 ft·lbf)

(b) Pull out the transmission toward the rear.

AT

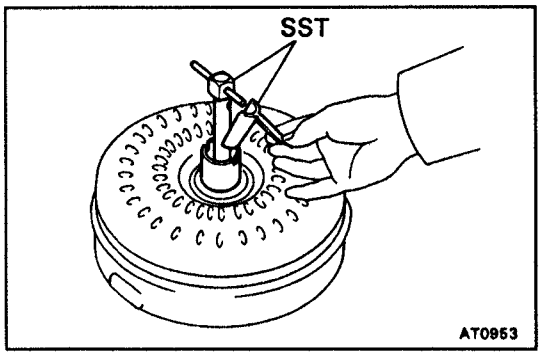

AT0X9–02

TORQUE CONVERTER CLUTCH AND DRIVE PLATE INSPECTION

1. **INSPECT ONE–WAY CLUTCH**

(a) Install SST in the inner race of the one–way clutch.
SST 09350–20015 (09397–22020)

(b) Install SST so that it fits in the notch of the converter hub and outer race of the one–way clutch.
SST 09350–20015 (09397–22020)

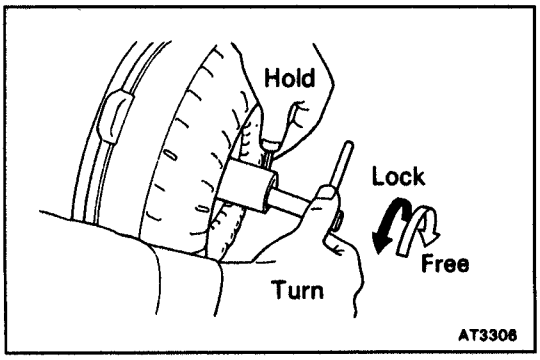

(c) With the torque converter clutch held upright, the clutch should lock when turned counterclockwise, and rotate freely and smoothly clockwise.
If necessary, clean the converter clutch and retest the clutch. Replace the converter clutch if the clutch still fails the test.

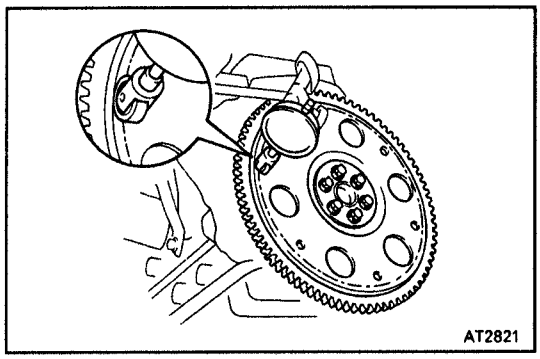

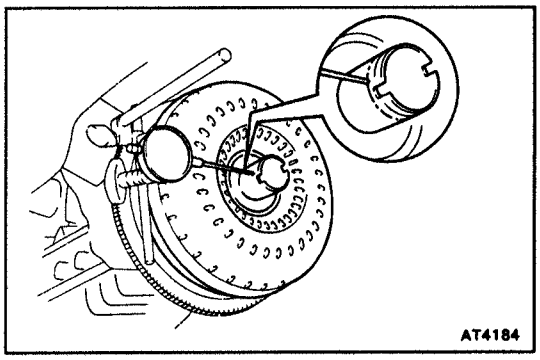

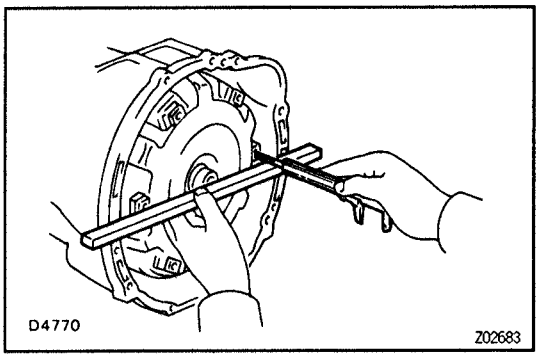

AT

2. MEASURE DRIVE PLATE RUNOUT AND INSPECT RING GEAR

Set up a dial indicator and measure the drive plate runout.

Maximum runout: 0.20 mm (0.0079 in)

If runout is not within the specification or if the ring gear is damaged, replace the drive plate.

If installing a new drive plate, note the orientation of spacers and tighten the bolts.

Torque: 74 N·m (750 kgf·cm, 54 ft·lbf)

3. MEASURE TORQUE CONVERTER CLUTCH SLEEVE RUNOUT

Temporarily mount the torque converter clutch to the drive plate. Set up a dial indicator.

Maximum runout: 0.30 mm (0.0118 in.)

If runout is not within the specification, try to correct by reorienting the installation of the converter.

HINT: Mark the position of the converter to ensure correct installation.

AT0M1-03

TORQUE CONVERTER CLUTCH INSTALLATION

Using calipers and a straight edge, measure from the installed surface to the torque converter clutch to the front surface of the transmission housing.

Correct distance: More than 31.75 mm (1.2500 in.)

If the distance is less than the standard, check for an improper installation.

AT11G-01

TRANSMISSION INSTALLATION

Installation is in the reverse order of removal.

SHIFT LOCK SYSTEM

COMPONENTS

AT0M2–03

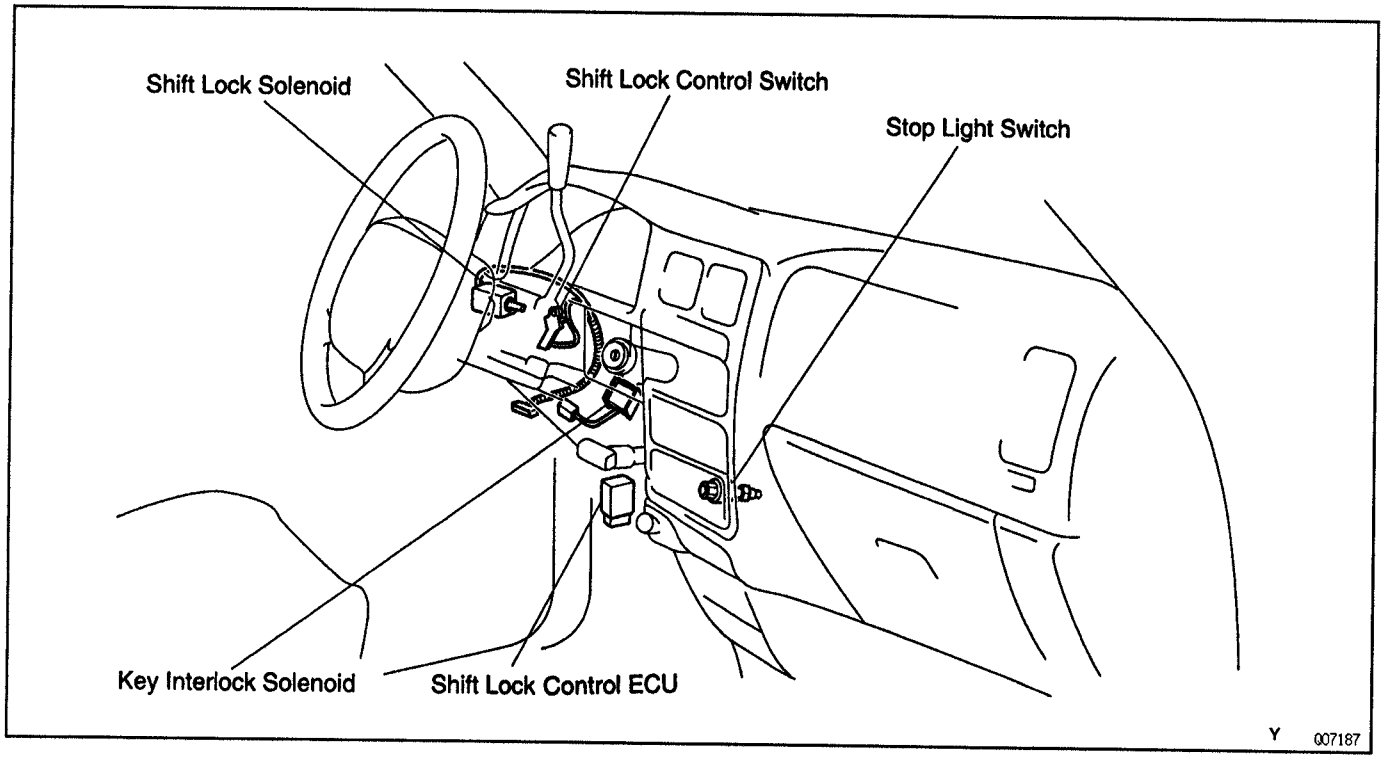

AT

WIRING DIAGRAM

AX012–06

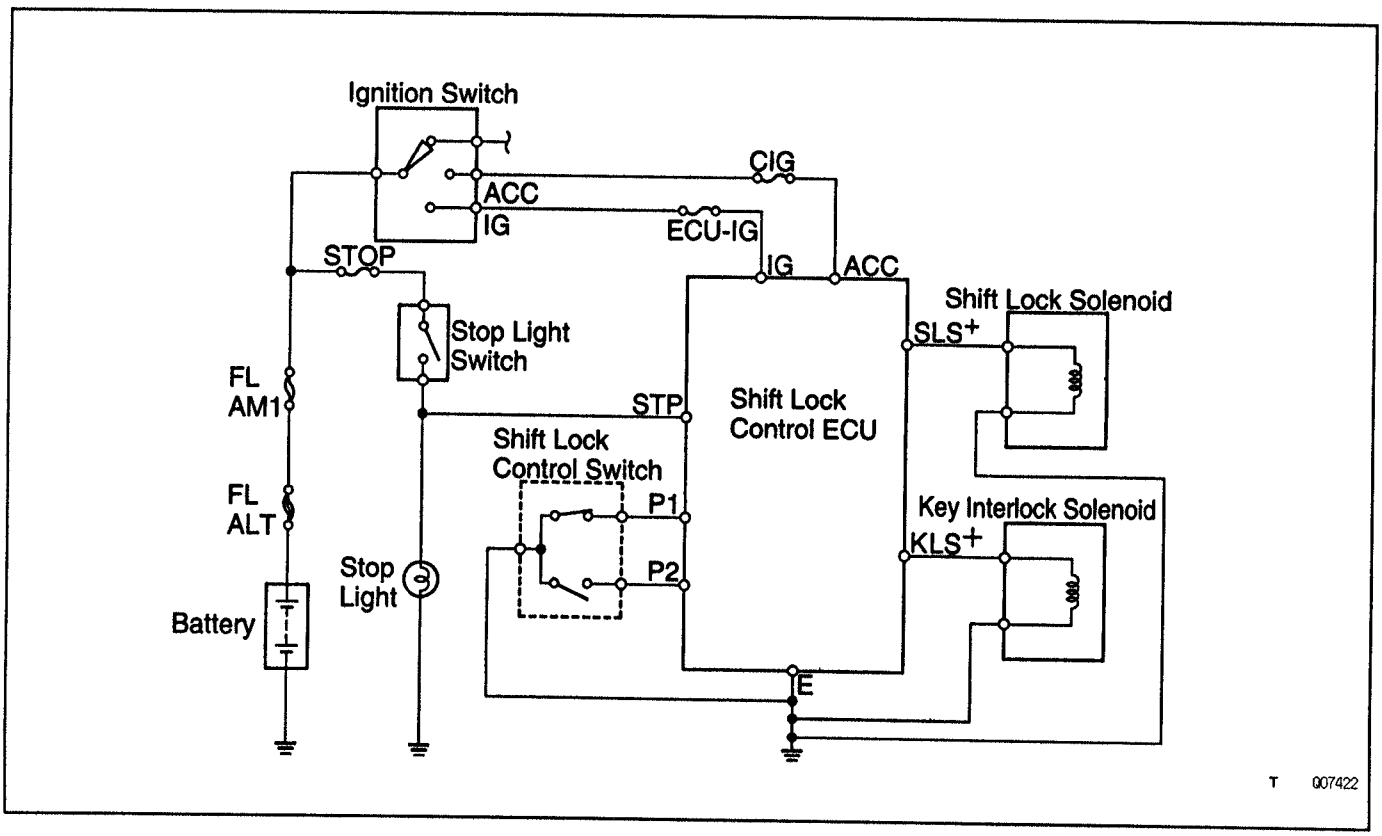

AT0XA-02

ELECTRIC CONTROL COMPONENTS INSPECTION

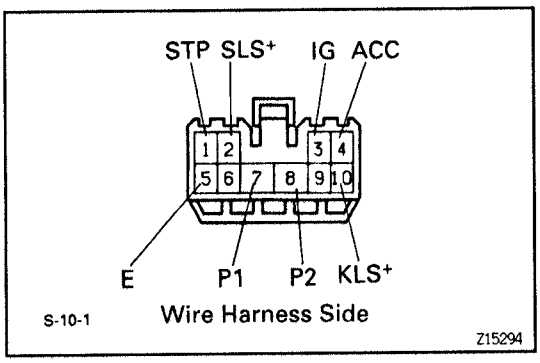

1. INSPECT SHIFT LOCK CONTROL ECU

Using a voltmeter, measure the voltage at each terminal.

HINT: Do not disconnect the ECU connector.

Terminal	Measuring Condition	Voltage (V)
ACC – E	Ignition switch ACC	10 – 14
IG – E	Ignition switch ON	10 – 14
STP – E	Depressing brake pedal	10 – 14
KLS+ – E	① Ignition switch ACC and P position ② Ignition switch ACC and except P position ③ (After approx 1 second)	0 10 – 14 6 – 9
SLS+ – E	① Ignition switch ON and P position ② Depress brake pedal ③ Except P position	0 8.5 – 13.5 0
P1 – E	① Ignition switch ON, P position and depress brake pedal ② Shift except P position under conditions above	0 9 – 13.5
P2 – E	① Ignition switch ACC and P position ② Shift except P position under conditions above	9 – 13.5 0

AT

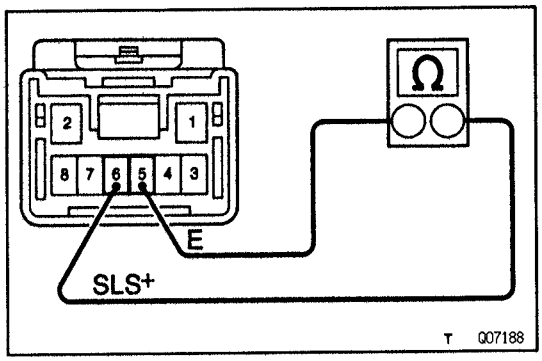

2. INSPECT SHIFT LOCK SOLENOID

(a) Disconnect the solenoid connector.

(b) Using an ohmmeter, measure the resistance between terminals.

Standard resistance: 29–35 Ω

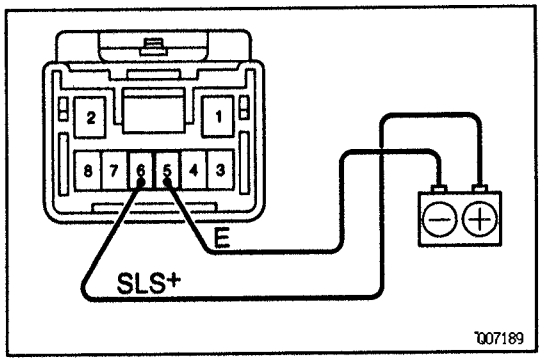

(c) Apply the battery positive voltage between terminals. Check that an operation noise can be heard from the solenoid.

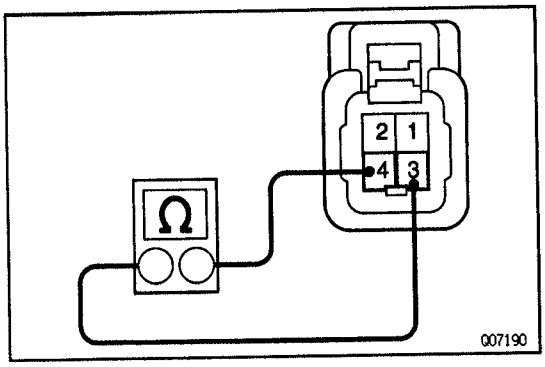

3. INSPECT KEY INTERLOCK SOLENOID

(a) Disconnect the solenoid connector.

(b) Using an ohmmeter, measure the resistance between terminals.

Standard resistance: 12.5–16.5 Ω

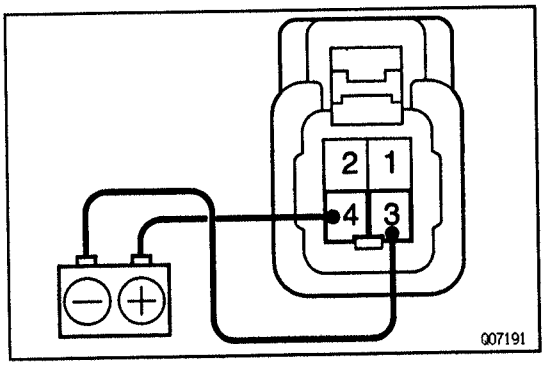

(c) Apply battery positive voltage between the terminals. Check that an operation noise can be heard from the solenoid.

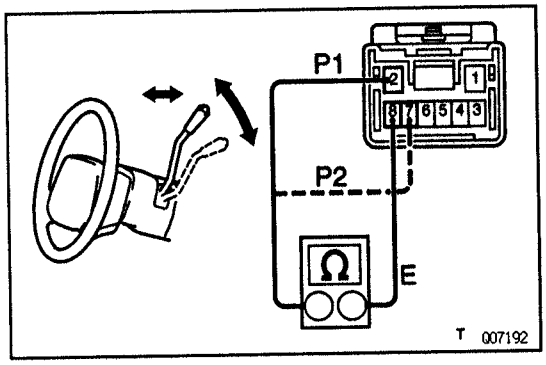

4. INSPECT SHIFT LOCK CONTROL SWITCH

Inspect that there is continuity between each terminal.

Shift position	Tester condition to terminal number	Specified value
P position	E – P1	Continuity
P position (Pull the shift lever toward you)	E – P1 E – P2	Continuity
R, N, D, 2, L position	E – P2	Continuity

AT

SERVICE SPECIFICATIONS

SERVICE DATA

AT0M3–05

Governor Pressure			
Tire size: P195/75R14			
Output shaft rpm (Vehicle speed reference)			
1.000 rpm (32 km/h, 20 mph)	98–157 kPa	1.0–1.6 kgf/cm²	14–23 psi
1.800 rpm(57 km/h, 35 mph)	196–255 kPa	2.0–2.6 kgf/cm²	28–37 psi
3.500 rpm (111 km/h, 69 mph)	500–618 kPa	5.1–6.3 kgf/cm²	73–90 psi
Tire size: P215/70R14			
Output shaft rpm (Vehicle speed reference)			
1.000 rpm (32 km/h, 20 mph)	98–157 kPa	1.0–1.6 kgf/cm²	14–23 psi
1.800 rpm(58 km/h, 36 mph)	196–255 kPa	2.0–2.6 kgf/cm²	28–37 psi
3.500 rpm (113 km/h, 70 mph)	500–618 kPa	5.1–6.3 kgf/cm²	73–90 psi
Line pressure (wheel locked) Engine idling			
D position	441–500 kPa	4.5–5.1 kgf/cm²	64–73 psi
R position	667–745 kPa	6.8–7.6 kgf/cm²	97–108 psi
AT stall (throttle valve fully opened)			
D position	990–1,167 kPa	10.1–11.9 kgf/cm²	144–169 psi
R position	1,471–1,863 kPa	15.0–19.0 kgf/cm²	213–270 psi
Engine stall revolution D and R position	1,850±150 rpm		
Time lag N → D position	Less than 1.2 seconds		
N → R position	Less than 1.5 seconds		
Engine idle speed (A/C OFF)			
N position	700 ± 50 rpm		
Throttle cable adjustment (Throttle valve fully opened)	Between boot and face and inner cable stopper		
	0–1 mm	0–0.04 in.	
Drive plate runout Max.	0.20 mm	0.0079 in.	
Torque converter clutch sleeve runout Max.	0.30 mm	0.0118 in.	
Torque converter clutch installation distance	More than 31.75 mm	1.2500 in.	
Speedometer driven gear oil seal drive in depth	20 mm	0.79 in.	

SHIFT POINT

Shift position	Shifting point		Vehicle speed km/h (mph)
D	Throttle valve fully opened	1→2	55–69 (34–43)
		2→3	101–116 (63–72)
		O/D→3	*
		3→2	96–111 (60 –69)
		2→1	44–57 (27–35)
	Throttle valve fully closed	3→O/D	43–55 (27–34)
L	Throttle valve fully opened	2→1	47–64 (29–40)

* O/D→3 down–shift is possible up to maximum speed.

AT02R–06

TORQUE SPECIFICATIONS

Part tightened		N·m	kgf·cm	ft·lbf
Oil cooler pipe flare nut		34	350	25
Torque converter clutch x Drive plate		41	420	30
Drive plate x Crankshaft		74	750	54
Extension housing x Transmission case		34	345	25
Parking lock pawl bracket x Transmission case		7.4	75	65 in.·lbf
Valve body x Transmission case		10	100	7
Oil strainer x Valve body		5.4	55	48 in.·lbf
Oil pan		5.4	55	48 in.·lbf
Governor body		3.9	40	35 in.·lbf
Control shaft lever		6.9	70	61 in.·lbf
Oil cooler union		34	350	25
Oil cooler elbow		34	350	25
Park/neutral position switch	Bolt	5.4	55	48 in.·lbf
	Nut	3.9	40	35 in.·lbf
Drain plug		20	205	15
Extension housing x Rear mounting insulator		25	260	19
Rear mounting bracket x Rear support member		58	590	43
Rear mounting bracket x Rear mounting insulator		18	185	13
Stiffener plate x Engine		37	380	27
Stiffener plate x Torque converter clutch housing		37	380	27
Exhaust manifold x Exhaust pipe		62	630	46
Front exhaust pipe clamp bolt		19	195	14
Exhaust pipe bracket x Torque converter clutch housing		19	195	14
Control shaft lever x Control cable		13	130	9
Overdrive solenoid x Transmission case		13	130	9
Transmission x Engine		71	730	53
Tail pipe x TWC		48	490	35

AT

AT

A340E, A340F AUTOMATIC TRANSMISSION

OPERATION ..... AT– 2
PRECAUTION ..... AT– 3
PREPARATION ..... AT– 3
ON–VEHICLE REPAIR ..... AT– 5
ASSEMBLY REMOVAL AND INSTALLATION (A340E) ..... AT– 14
ASSEMBLY REMOVAL AND INSTALLATION (A340F) ..... AT– 19
SHIFT LOCK SYSTEM ..... AT– 27
TROUBLESHOOTING ..... AT– 32
SERVICE SPECIFICATIONS ..... AT– 87

OPERATION

AT10H–01

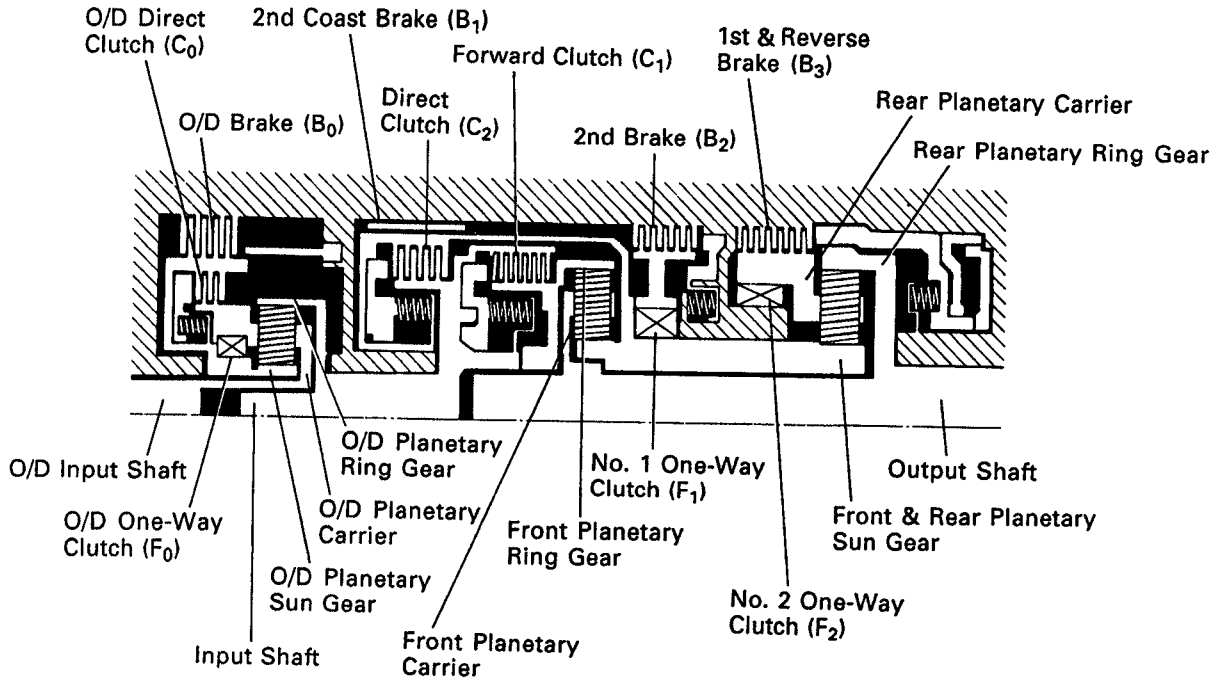

AT2157

○ ... Operating

Shift lever position	Gear position	C_0	C_1	C_2	B_0	B_1	B_2	B_3	F_0	F_1	F_2
P	Parking	○									
R	Reverse	○		○				○	○		
N	Neutral	○									
D	1st	○	○						○		○
	2nd	○	○				○		○	○	
	3rd	○	○	○			○		○		
	O/D		○	○	○		○				
2	1st	○	○						○		○
	2nd	○	○			○	○		○	○	
	*1 3rd	○	○	○			○		○		
L	1st	○	○					○	○		○
	*2 2nd	○	○			○	○		○	○	

*1 Down-shift only in the 2 position and 3rd gear — no up-shift.

*2 Down-shift only in the L position and 2nd gear — no up-shift.

V07130

PRECAUTION

AT0UF–04

When working with FIPG material, you must observe the following.

- **Using a razor blade and gasket scraper, remove all the old packing (FIPG) material from the gasket surfaces.**
- **Thoroughly clean all components to remove all the loose material.**
- **Clean both sealing surfaces with a non–residue solvent.**
- **Apply the FIPG in an approx. 1 mm (0.04 in.) wide bead along the sealing surface.**
- **Parts must be assembled within 10 minutes of application. Otherwise, the FIPG material must be removed and reapplied.**

If the vehicle is equipped with a mobile communication system, refer to the precaution in the IN section.

PREPARATION

AT02U–09

SST (SPECIAL SERVICE TOOLS)

	09032–00100 Oil Pan Seal Cutter	
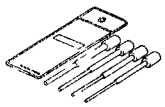	09201–10000 Valve Guide Bushing Remover & Replacer Set	Speedometer driven gear oil seal
	(09201–01080) Valve Guide Bushing Remover & Replacer 8	
	09308–10010 Oil Seal Puller	
	09325–40010 Transmission Oil Plug	
	09350–30020 TOYOTA Automatic Transmission Tool Set	
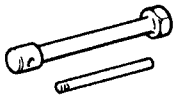	(09351–32010) One–way Clutch Test Tool	
	(09351–32020) Stator Stopper	
	09843–18020 Diagnosis Check Wire	

AT

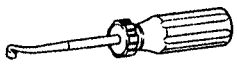	09921–00010	Spring Tension Tool	Speedometer driven gear oil seal
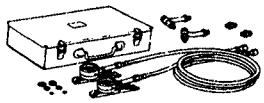	09992–00094	Automatic Transmission Oil Pressure Gauge Set	

RECOMMENDED TOOLS

AT04C–07

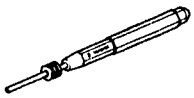	09031–00030	Pin Punch .	
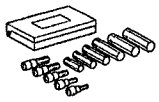	09040–00010	Hexagon Wrench Set .	
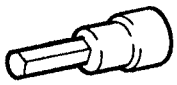	(09043–20120)	Socket Hexagon Wrench 12.	
	09082–00050	TOYOTA Electrical Tester Set.	
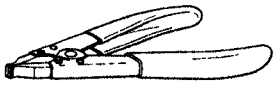	09905–00012	Snap Ring No.1 Expander .	
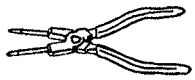	09905–00013	Snap Ring Pliers .	

AT

EQUIPMENT

AT02V–0G

OBD II scan tool	
Ohmmeter	
Voltmeter	
Torque wrench	
Dial indicator with magnetic base	Check drive plate runout
Vernier calipers	Check torque converter clutch installation
Straignt edge	Check torque converter clutch installation

AT02W–0F

LUBRICANT

Item	Capacity	Classification
Automatic transmission fluid		
A340E:		
Dry fill	7.2 liters (7.6 US qts, 6.3 Imp.qts)	
Drain and refill	1.6 liters (1.7 US qts, 1.4 Imp.qts)	ATF DEXRON® II
A340F:		
Dry fill	9.8 liters (10.5 US qts, 8.6 Imp.qts)	
Drain and refill	2.0 liters (2.1 US qts, 1.8 Imp.qts)	

AT02X–07

SSM (SPECIAL SERVICE MATERIALS)

08826–00090	Seal Packing 1281, THREE BOND 1281 or equivalent (FIPG)	Oil pan
08833–00080	Adhesive 1344, THREE BOND 1344, LOCTITE 242 or equivalent	Extension housing

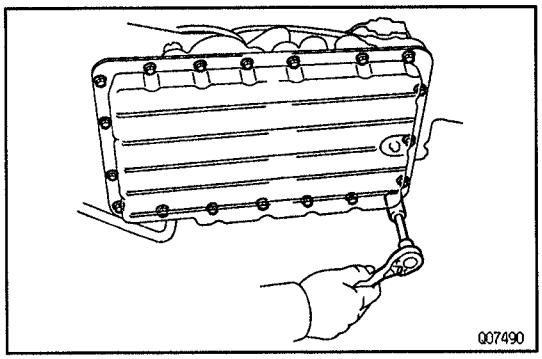

ON–VEHICLE REPAIR

AT10J–01

VALVE BODY REMOVAL

1. **DRAIN ATF**
   Torque: 20 N·m (205 kgf·cm, 15 ft·lbf)
2. **REMOVE OIL PAN**
   REMOVAL NOTICE: Some fluid will remain in the oil pan.

(a) Remove the 19 bolts.
Torque: 7.4 N·m (75 kgf·cm, 65 in.·lbf)

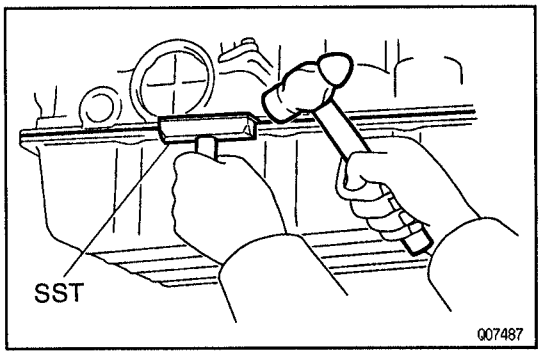

(b) Install the blade of SST between the transmission case and oil pan, cut off applied sealer and then remove the oil pan.
SST 09032–00100
REMOVAL NOTICE: When removing the oil pan, be careful not to damage the oil pan flange.

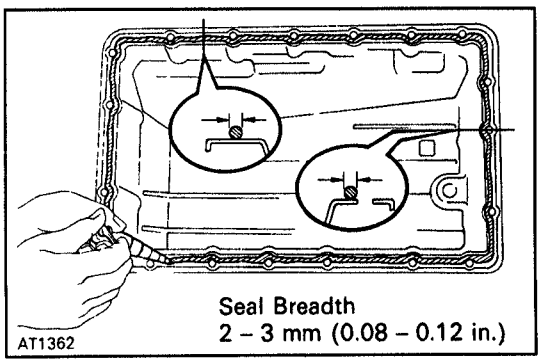

INSTALLATION HINT: Apply FIPG to the oil pan, as shown in the illustration.
FIPG: Part No. 08826–00090, THREE BOND 1281 or equivalent

AT

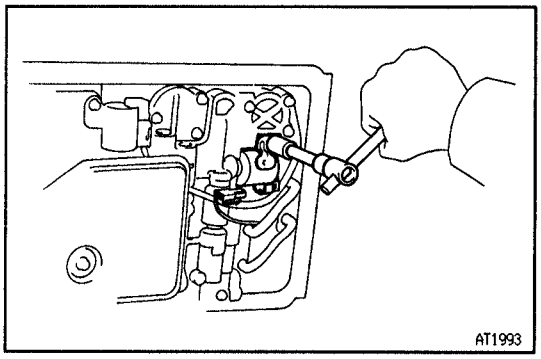

3. WHEN REPLACING 3 SHIFT SOLENOID VALVES

(a) Disconnect the connectors from the solenoid valves.

(b) Remove the 3 solenoid valve mounting bolts.
Torque: 10 N·m (100 kgf·cm, 7 ft·lbf)

(c) Remove the 3 solenoid valves.
INSTALLATION HINT: Replace the O–rings with new ones.

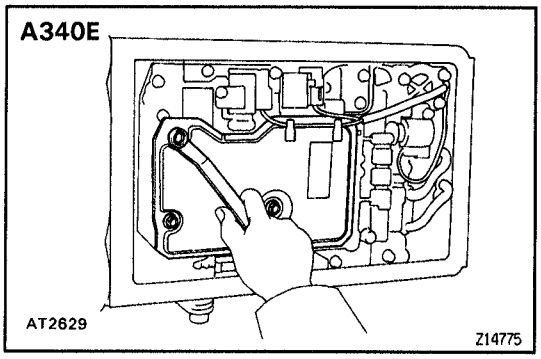

4. REMOVE OIL STRAINER

A340E:

Remove the 3 bolts, and the oil strainer and gaskets.
Torque: 10 N·m (100 kgf·cm, 7 ft·lbf)
NOTICE: Be careful as some fluid will come out with the oil strainer.
INSTALLATION HINT: Replace the gaskets with new ones.

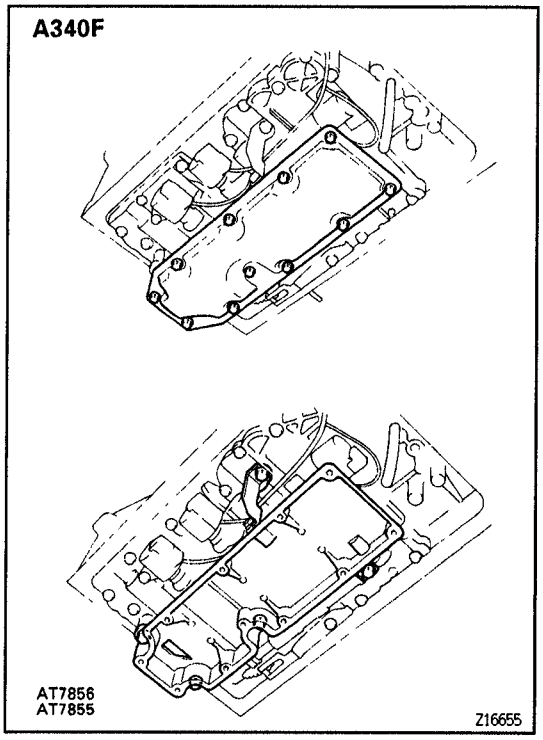

A340F:

(a) Remove the 11 bolts and oil strainer from the oil strainer case.
Torque: 6.9 N·m (70 kgf·cm, 61 in.·lbf)

(b) Remove the 2 gaskets from the oil strainer.
INSTALLATION HINT: Replace the gaskets with new ones.

(c) Remove the 5 bolts and oil strainer case.
Torque: 10 N·m (100 kgf·cm, 7 ft·lbf)

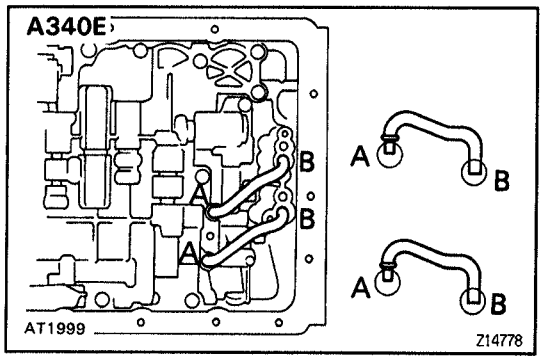

5. REMOVE OIL PIPE

A340E:

Pry up both pipe ends with a large screwdriver and remove the 2 pipes.
INSTALLATION NOTICE: Make sure that the oil pipes or the magnet do not interfere with the oil pan.

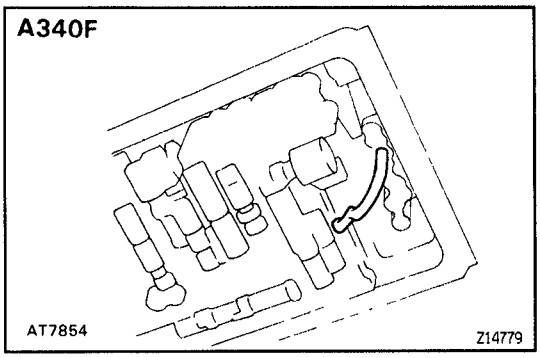

A340F:
Pry up both pipe ends with a large screwdriver and remove the pipe.
INSTALLATION NOTICE: Make sure that the oil pipe or the magnet do not interfere with the oil pan.

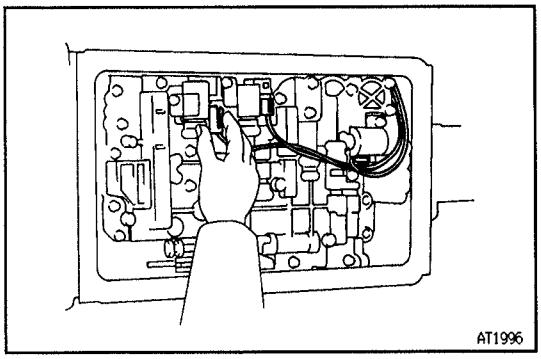

6. DISCONNECT CONNECTOR FROM EACH SOLENOID VALVE

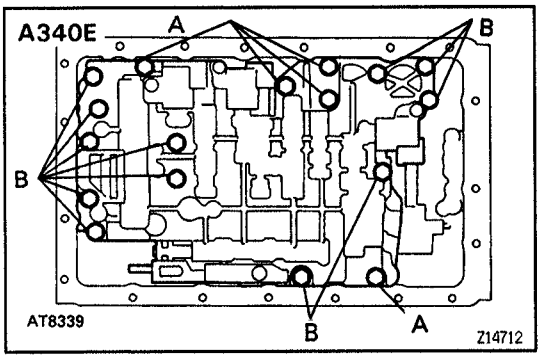

7. REMOVE VALVE BODY

A340E:

(a) Remove the 17 bolts.
Torque: 10 N·m (100 kgf·cm, 7 ft·lbf)
Bolt length:
Bolt A: 23 mm (0.91 in.)
Bolt B: 32 mm (1.26 in.)

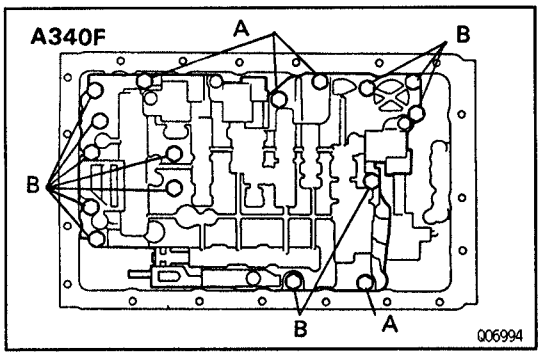

A340F:
Remove the 16 bolts.
Torque: 10 N·m (100 kgf·cm, 7 ft·lbf)
Bolt length:
Bolt A: 23 mm (0.91 in.)
Bolt B: 32 mm (1.26 in.)

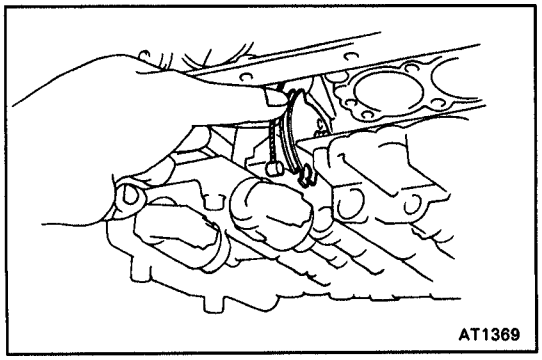

(b) Disconnect the throttle cable from the cam.
(c) Remove the valve body.
REMOVAL NOTICE: Be careful not to drop the check ball body and spring.
INSTALLATION HINT:
- Install the body together the check ball body and spring.
- Align the groove of the manual valve to the pin of the lever.

AT

VALVE BODY INSTALLATION

AT10K–01

Installation is in ther reverse order of removal.

HINT: After installation, fill ATF and check fluid level. (See page AT–42)

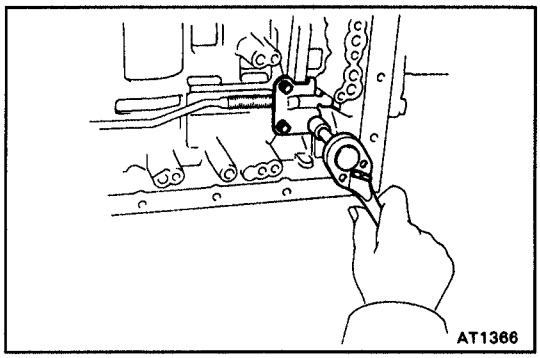

PARKING LOCK PAWL REMOVAL

AT0FB–0A

1. **REMOVE VALVE BODY (See page AT–5)**
2. **REMOVE PARKING LOCK PAWL BRACKET**

   INSTALLATION HINT:
   - Push the lock rod fully forward.
   - Check that the parking lock pawl operates smoothly.
   - Torque the 3 bolts.

   Torque: 7.4 N·m (75 kgf·cm, 65 in.·lbf)
3. **REMOVE SPRING FROM PARKING LOCK PAWL SHAFT**

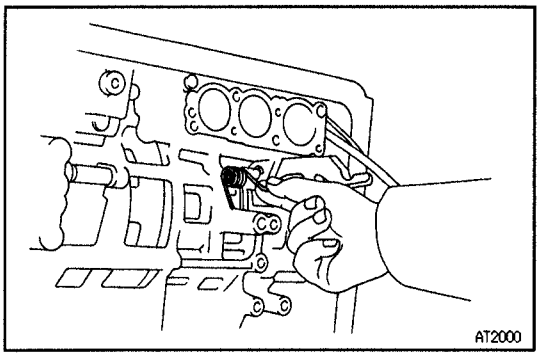

AT

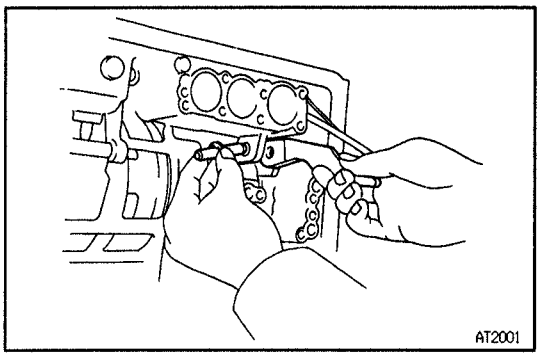

4. **REMOVE PARKING LOCK PAWL AND SHAFT**

PARKING LOCK PAWL INSTALLATION

AT10L–01

Installation is in the reverse order of removal.

HINT: After installation, fill ATF and check fluid level. (See page AT–42)

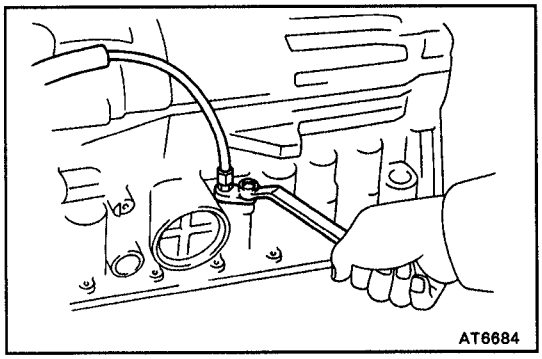

THROTTLE CABLE REMOVAL

AT10M–01

1. **DISCONNECT THROTTLE CABLE**
(a) Disconnect the cable housing from the bracket.
(b) Disconnect the cable from the throttle linkage.
(c) Remove the bolt and disconnect the cable clamp from the torque converter clutch housing.
2. **DISCONNECT THROTTLE CABLE CLAMP FROM TORQUE CONVERTER CLUTCH HOUSING**
3. **REMOVE VALVE BODY (See page AT–5)**
4. **REMOVE THROTTLE CABLE**
Remove the retaining bolt and pull out the throttle cable.

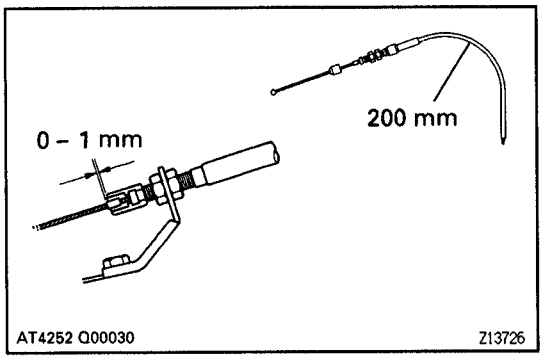

THROTTLE CABLE INSTALLATION

AT10N–01

Installation is in the reverse order of removal.
HINT:
- After installation, fill and check the fluid level. (See page AT–42)
- Adjust the throttle cable. (See page AT–43)

If throttle cable is new, stake stopper on inner cable.
(a) Bend the cable so there is a radius of about 200 mm (7.87 in.).
(b) Pull in the slack of the inner cable.
(c) Stake the stopper with 0 – 1 mm (0 – 0.04 in.) protruding from the end of the outer cable.

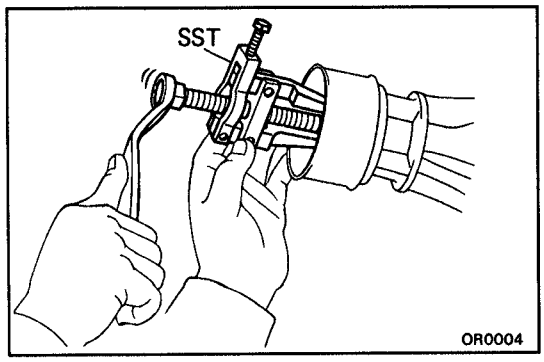

EXTENSION HOUSING (A340E) OIL SEAL REPLACEMENT

AT0UJ–06

1. **REMOVE PROPELLER SHAFT (See page PR–6)**
2. **REMOVE REAR OIL SEAL**
NOTICE: Clean the extension housing before removing the oil seal.
Using SST, remove the oil seal.
SST 09308–10010

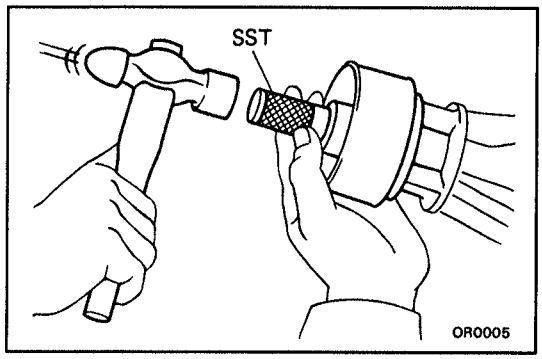

3. INSTALL NEW OIL SEAL

Coat the lip of a new oil seal with MP grease and, using SST and a hammer, carefully drive the oil seal in as far as it will go.

SST 09325–40010

4. INSTALL PROPELLER SHAFT (See page PR–14)

5. CHECK FLUID LEVEL (See page AT–42)

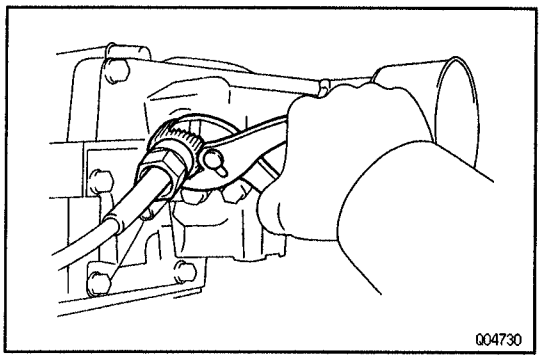

EXTENSION HOUSING (A340E) REMOVAL AT10P–01

1. REMOVE PROPELLER SHAFT (See page PR–5)

2. DISCONNECT SPEEDOMETER CABLE AND REMOVE THE SPEEDOMETER DRIVEN GEAR

(a) Loosen the serrated collar with pliers. Do not lose the felt dust protector and washer.

(b) Disconnect the speedometer cable.

(c) Remove the bolt and locking plate. Pry out the speedometer driven gear.

3. REMOVE NO.2 VEHICLE SPEED SENSOR

AT

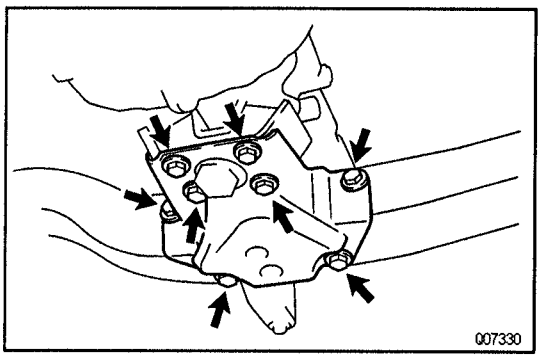

4. REMOVE REAR MOUNTING BRACKET FROM REAR SUPPORT MEMBER

Remove the 8 bolts from the rear mounting bracket.

Torque:

Rear mounting side: 18 N·m (185 kgf·cm, 13 ft·lbf)

Frame side: 58 N·m (590 kgf·cm, 42 ft·lbf)

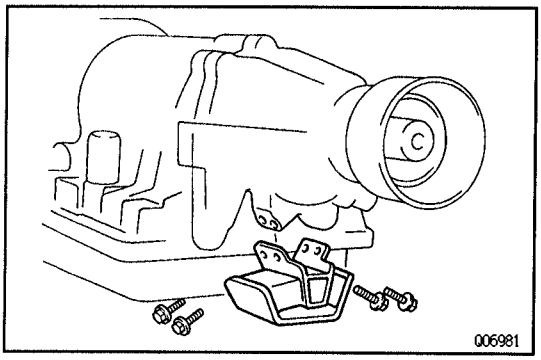

5. REMOVE REAR MOUNTING INSULATOR FROM EXTENSION HOUSING

Remove the 4 bolts and the engine rear mounting insulator from the extension housing.

Torque: 65 N·m (660 kgf·cm, 48 ft·lbf)

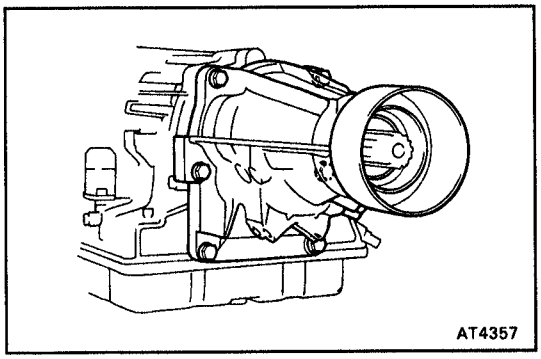

6. REMOVE EXTENSION HOUSING AND GASKET

Remove the 6 bolts. If necessary, tap the extension housing with a plastic hammer or block of wood to loosen it.

Torque: 36 N·m (370 kgf·cm, 27 ft·lbf)

INSTALLATION HINT:

- Replace the gasket with a new one.
- Coat the threads of the all bolts with sealant.

Sealant: Part No. 08833–00080, THREE BOND 1344, LOCTITE 242 or equivalent

AT10Q–01

EXTENSION HOUSING (A340E) INSTALLATION

Installation is in the reverse order of removal.

HINT: After installation, add and check the fluid level. (See page AT–42)

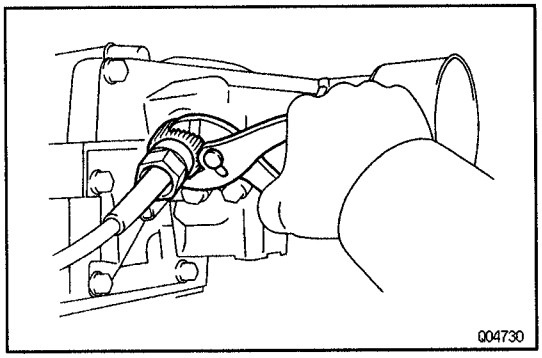

AT0XD–02

SPEEDOMETER DRIVEN GEAR REPLACEMENT

AT

1. DISCONNECT SPEEDOMETER CABLE AND REMOVE THE SPEEDOMETER DRIVEN GEAR

(a) Loosen the serrated collar with pliers. Do not lose the felt dust protector and washer.

(b) Disconnect the speedometer cable.

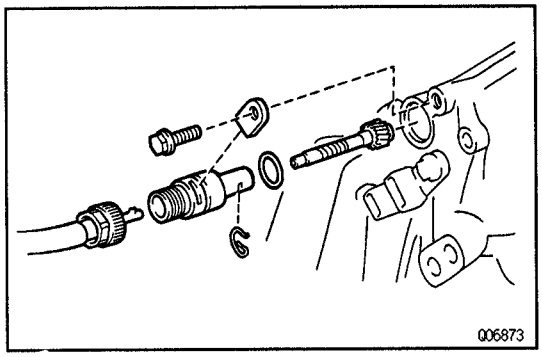

(c) Remove the bolt and locking plate. Pry out the speedometer driven gear assembly.

(d) Remove the O–ring from the speedometer drive gear assembly.

(e) Remove the clip and speedometer driven gear from the speedometer driven gear sleeve.

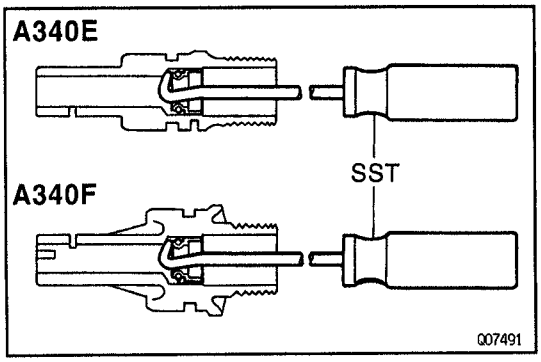

2. REMOVE SPEEDOMETER DRIVEN GEAR OIL SEAL

Using SST, remove the oil seal.

SST 09921–00010

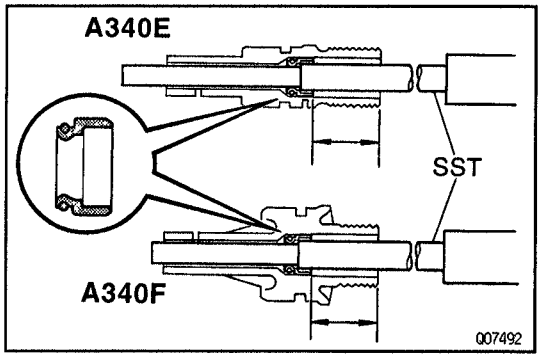

3. INSTALL SPEEDOMETER DRIVEN GEAR OIL SEAL

Using SST, install a new oil seal.

SST 09201–10000 (09201–01080)

Drive in depth: 20 mm (0.79 in.)

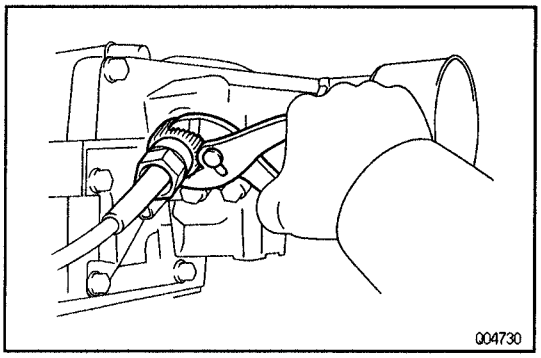

4. INSTALL SPEEDOMETER DRIVEN GEAR AND CONNECT SPEEDOMETER CABLE

(a) Install the clip and speedometer driven gear to the speedometer driven gear sleeve.

(b) Install a new O–ring to the speedometer driven gear assembly.

(c) Install the speedometer driven gear.

(d) Install the locking plate with the bolt.

Torque: 16 N·m (160 kgf·cm, 12 ft·lbf)

(e) Connect the speedometer cable.

(f) Tighten the serrated collar with pliers.

AT

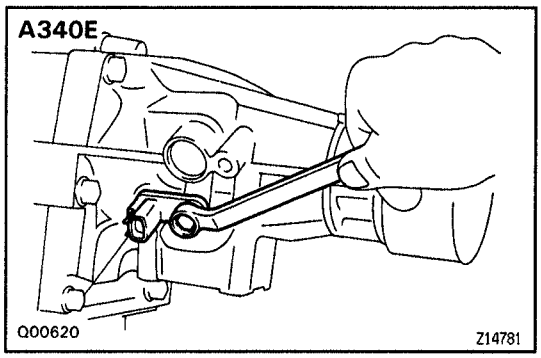

ATOUM–06

NO.2 VEHICLE SPEED SENSOR REPLACEMENT

1. DISCONNECT NO.2 VEHICLE SPEED SENSOR CONNECTOR

2. REMOVE NO.2 VEHICLE SPEED SENSOR

(a) Remove the bolt and No.2 vehicle speed sensor.

(b) Remove the O–ring from it.

3. INSTALL NO.2 VEHICLE SPEED SENSOR

(a) Cost a new O–ring with ATF and install it to the vehicle speed sensor.

(b) Install the speed sensor and torque the bolt.

Torque: 5.4 N·m (55 kgf·cm, 48 in.·lbf)

4. CONNECT NO. 2 VEHICLE SPEED SENSOR CONNECTOR

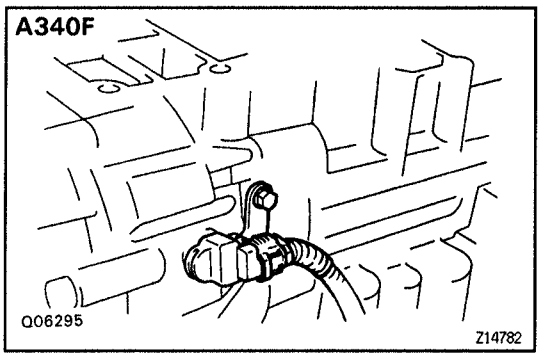

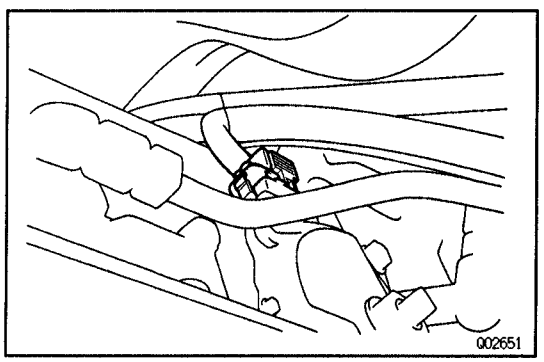

ATOVH–05

PARK/NEUTRAL POSITION SWITCH REPLACEMENT

1. DISCONNECT 2 OIL COOLER PIPES

(See page AT–23)

2. DISCONNECT PARK/NEUTRAL POSITION SWITCH CONNECTOR

(a) Pry off the lock washer and remove the nut.

(b) Remove the bolt and pull out the park/neutral position switch.

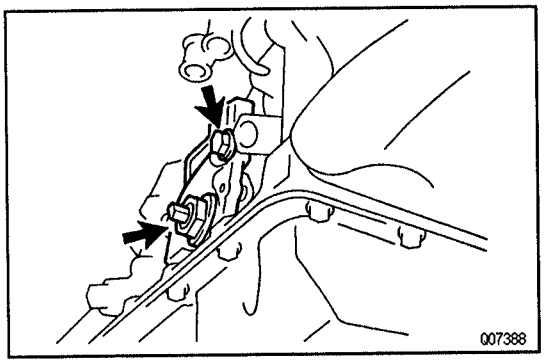

4. **INSTALL AND ADJUST PARK/NEUTRAL POSITION SWITCH (See page AT–43)**
5. **CONNECT PARK / NEUTRAL POSITION SWITCH CONNECTOR**
6. **CONNECT 2 OIL COOLER PIPES (See page AT–23)**

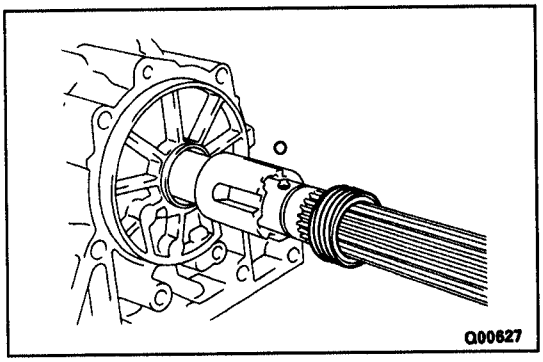

SENSOR ROTOR (A340E) REMOVAL

ATOXE–02

1. **REMOVE EXTENSION HOUSING (See page AT–10)**
2. **REMOVE SPEEDOMETER DRIVE GEAR AND BALL**

(a) Using snap ring pliers, remove the snap ring.
(b) Remove the speedometer drive gear and ball.

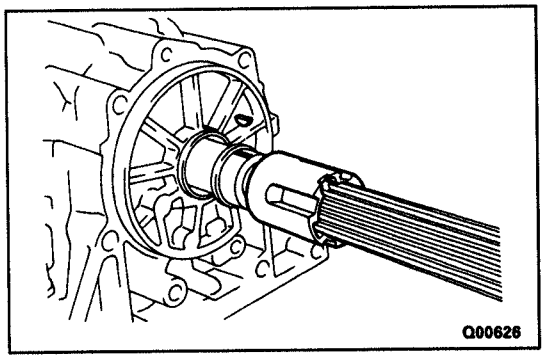

3. **REMOVE SENSOR ROTOR AND KEY**

(a) Remove the sensor rotor and key.
(b) Using snap ring pliers, remove the snap ring.

SENSOR ROTOR (A340E) INSTALLATION

AT10R–01

Installation is in the reverse order of removal.

INSTALLATION HINT: After installation, add and check the fluid level. (See page AT–42)

AT

ASSEMBLY REMOVAL AND INSTALLATION (A340E)

COMPONENTS

AT0XF–02

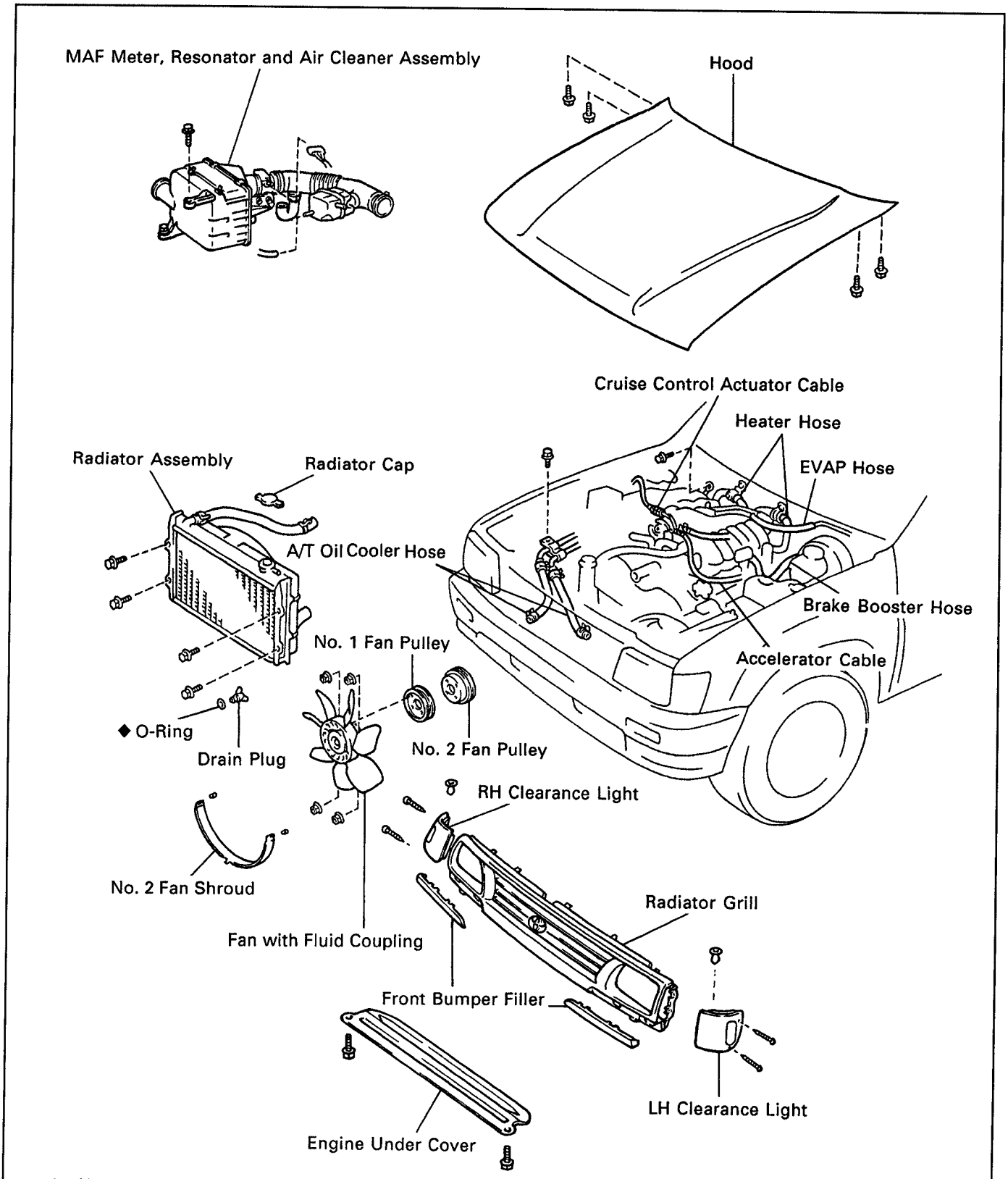

◆ Non-reusable part

P23068

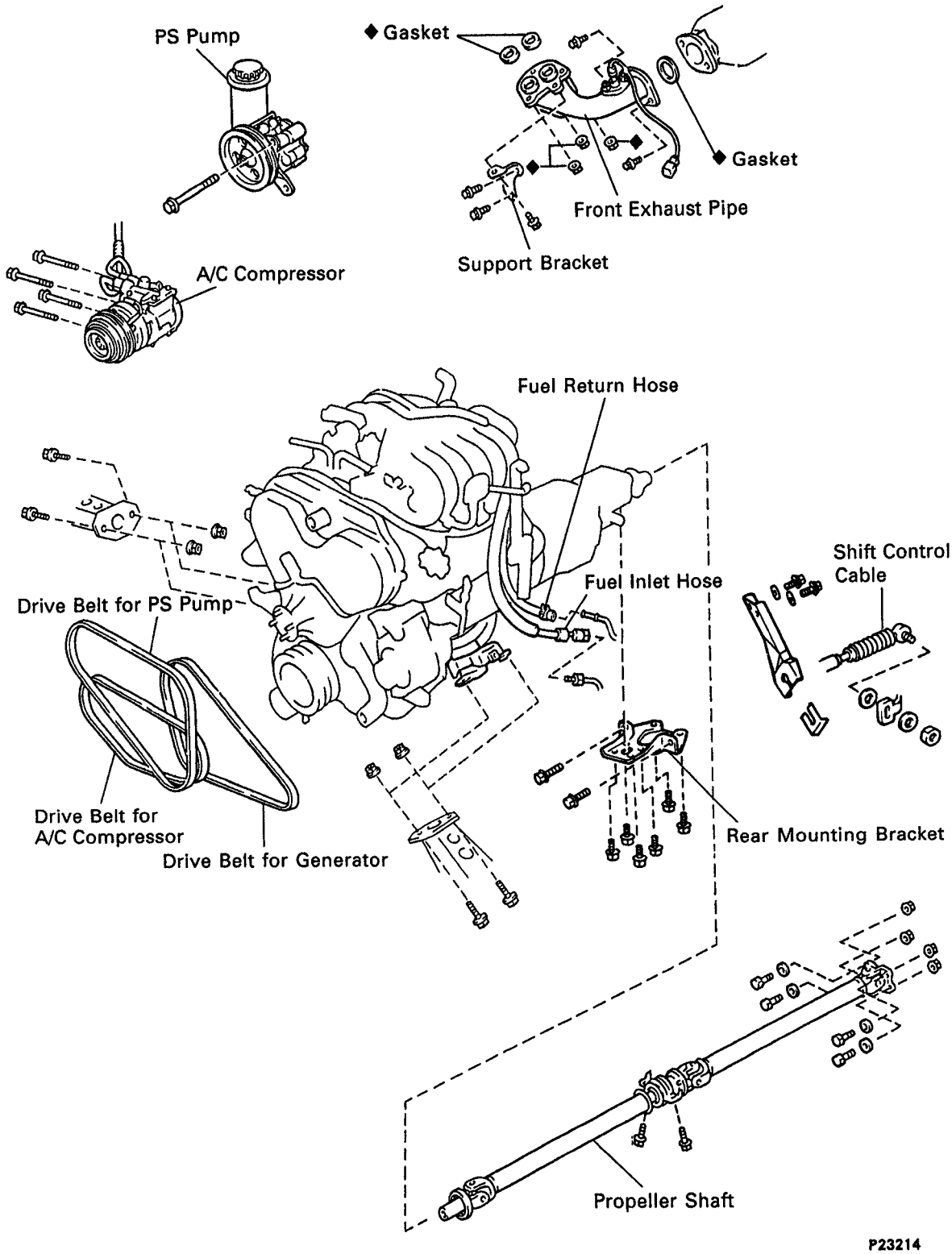

◆ Non-reusable part

Z15578

AT

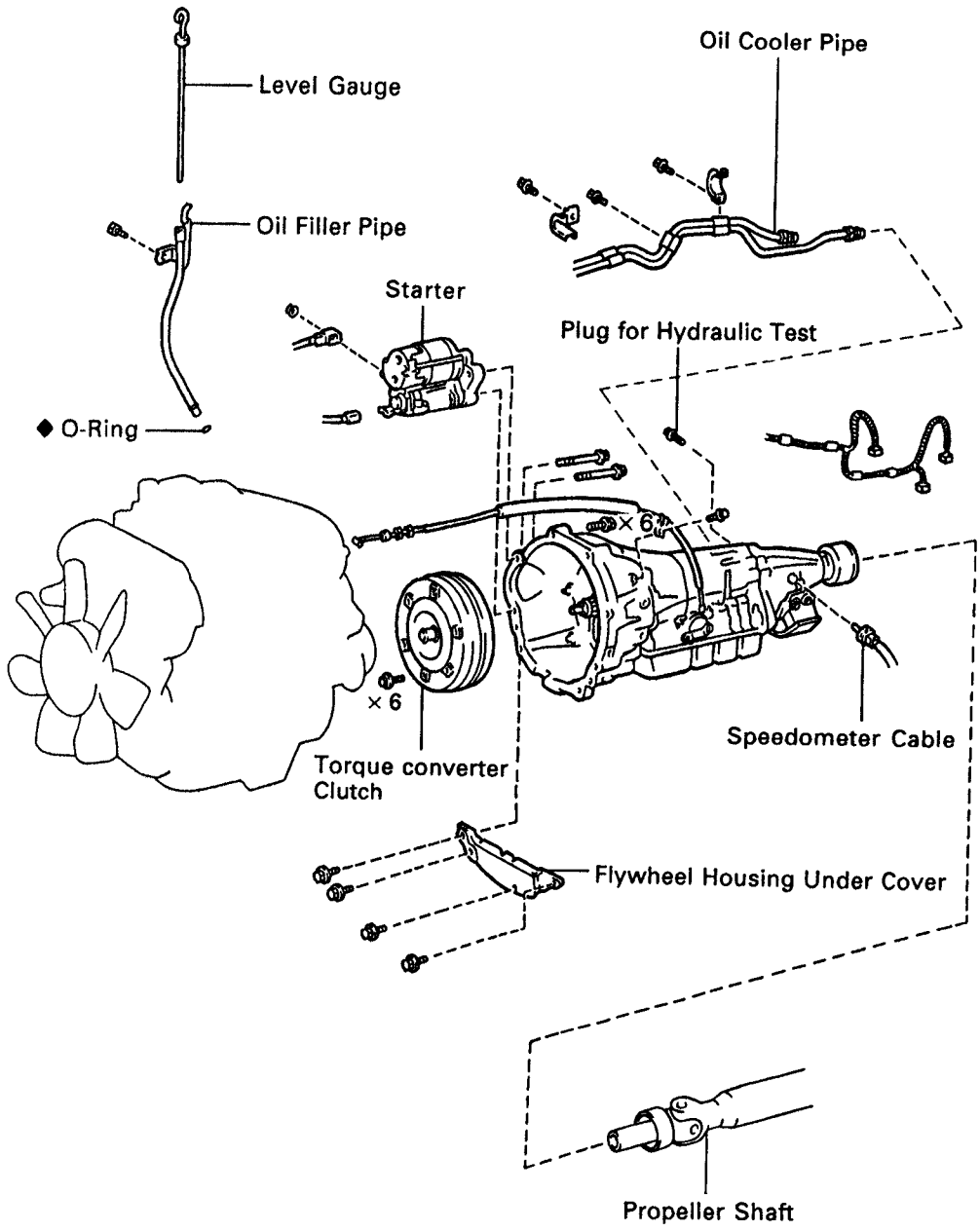

◆ Non-reusable part

008276

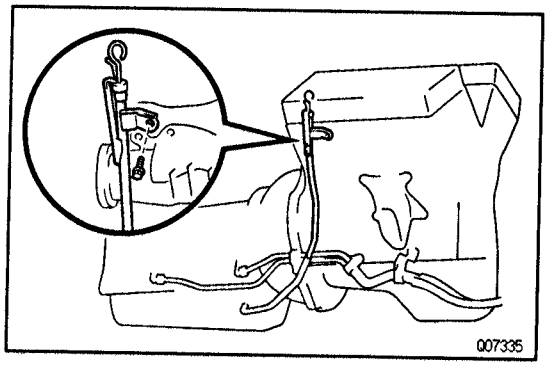

TRANSMISSION REMOVAL

AT0XG-02

1. **REMOVE TRANSMISSION WITH ENGINE (See page EG–60)**
2. **REMOVE ATF LEVEL GAUGE**
3. **REMOVE OIL FILLER PIPE**
   Remove the bolt and oil filler pipe with the O–ring.
   INSTALLATION HINT: Replace the O–ring with a new one.

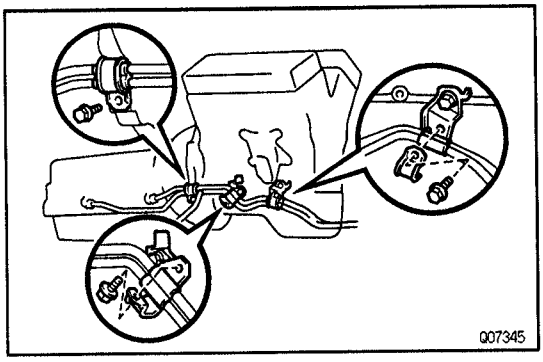

4. DISCONNECT 2 OIL COOLER PIPES

(a) Loosen the 2 oil cooler pipe union nuts.

(b) Remove the 3 clamp bolts, 2 clamps, and disconnet the 2 oil cooler pipes.

5. DISCONNECT FOLLOWING CONNECTOR FROM TRANSMISSION

- Park/neutral position switch
- Solenoid connector
- No.2 vehicle speed sensor

6. SEPARATE WIRE HARNESS FROM TRANSMISSION

7. REMOVE FLYWHEEL HOUSING UNDER COVER

Remove the 4 bolts and flywheel housing under cover.

Torque: 18 N·m (185 kgf·cm, 13 ft·lbf)

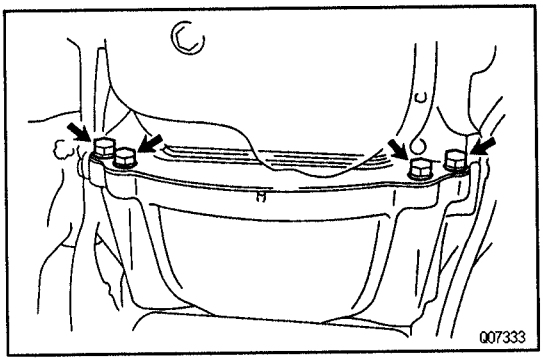

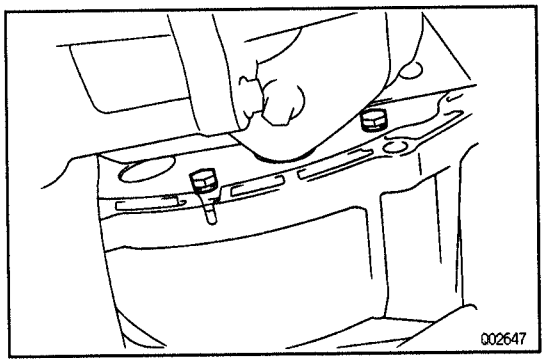

8. REMOVE TORQUE CONVERTER CLUTCH MOUNTING BOLT

While turning the crankshaft to gain access, remove the 6 bolts.

Torque: 41 N·m (420 kgf·cm, 30 ft·lbf)

INSTALLATION HINT: First install green colored bolt and then 5 other bolts.

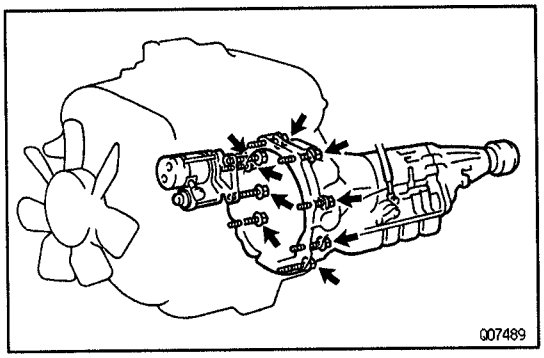

9. REMOVE STARTER AND TRANSMISSION FROM ENGINE

(a) Remove the 2 starter mounting bolts and starter.

Torque: 39 N·m (400 kgf·cm, 29 ft·lbf)

(b) Remove the 6 transmission mounting bolts from the engine.

Torque: 71 N·m (730 kgf·cm, 53 ft·lbf)

(c) Pull out the transmission to rearward.

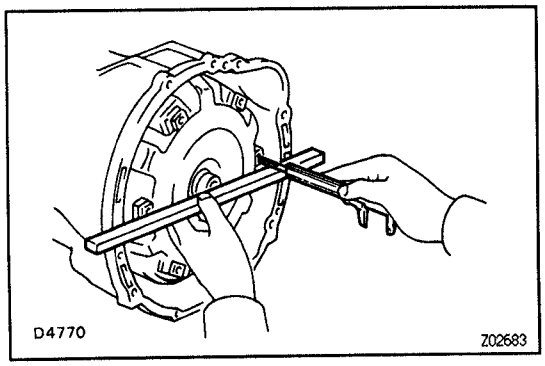

ATOVM–04

TORQUE CONVERTER CLUTCH TRANSMISSION INSTALLATION

CHECK TORQUE CONVERTER CLUTCH INSTALLATION

Using calipers and a straight edge, measure from the installed surface of the transmission housing.

Correct distance: More than 17.95 mm (0.7067 in.)

AT

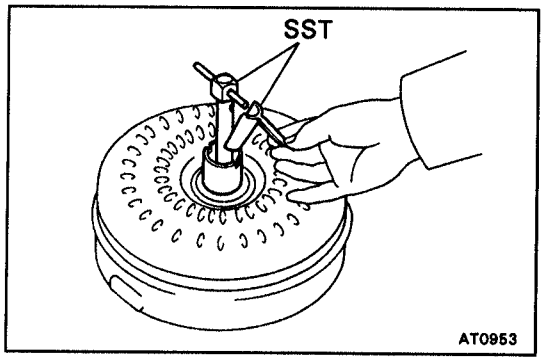

TORQUE CONVERTER CLUTCH AND DRIVE PLATE INSPECTION

AT0VN–04

1. INSPECT ONE–WAY CLUTCH

(a) Install SST in the inner race of one–way clutch.
SST 09350–30020 (09351–32010)

(b) Install SST so that it fits in the notch of the converter hub and outer race of the one–way clutch.
SST 09350–30020 (09351–32020)

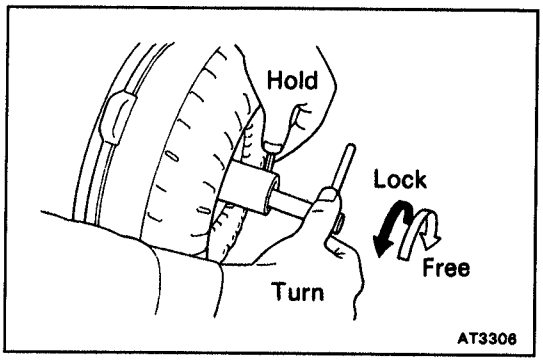

(c) With the torque converter clutch standing on its side, the clutch locks when turned counterclockwise, and rotates freely and smoothly clockwise.
If necessary, clean the converter and retest the clutch.
Replace the converter if the clutch still fails the test.

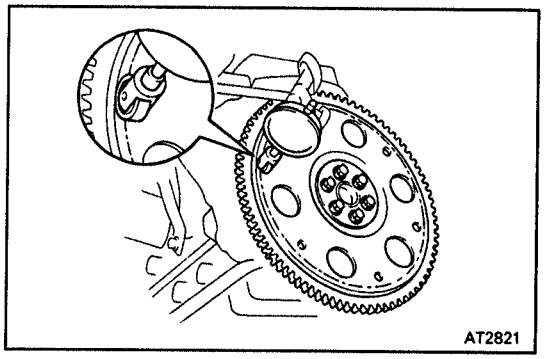

2. MEASURE DRIVE PLATE RUNOUT AND INSPECT RING GEAR

Set up a dial indicator and measure the drive plate runout.
Maximum runout: 0.20 mm (0.0079 in.)
If runout is not within specification, replace the drive plate.
Torque: 83 N·m (850 kgf·cm, 61 ft·lbf)

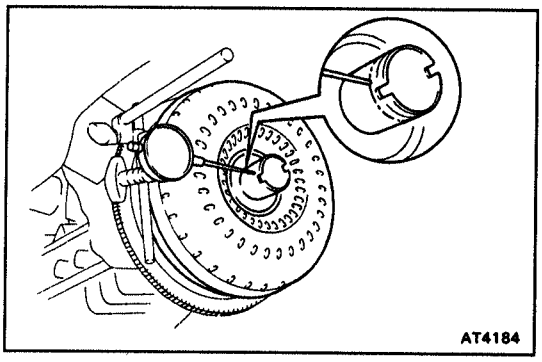

3. MEASURE TORQUE CONVERTER CLUTCH SLEEVE RUNOUT

Temporarily mount the torque converter clutch to the drive plate. Set up a dial indicator.
Maximum runout: 0.30 mm (0.0118 in.)
If runout is not within specification, try to correct by reorienting the installation of the converter clutch.
HINT: Mark the position of the converter clutch to ensure correct installation.

TRANSMISSION INSTALLATION

AT108–01

Installation is in the reverse order of removal.

ASSEMBLY REMOVAL AND INSTALLATION (A340F)

ATOXH–02

COMPONENTS

3RZ-FE

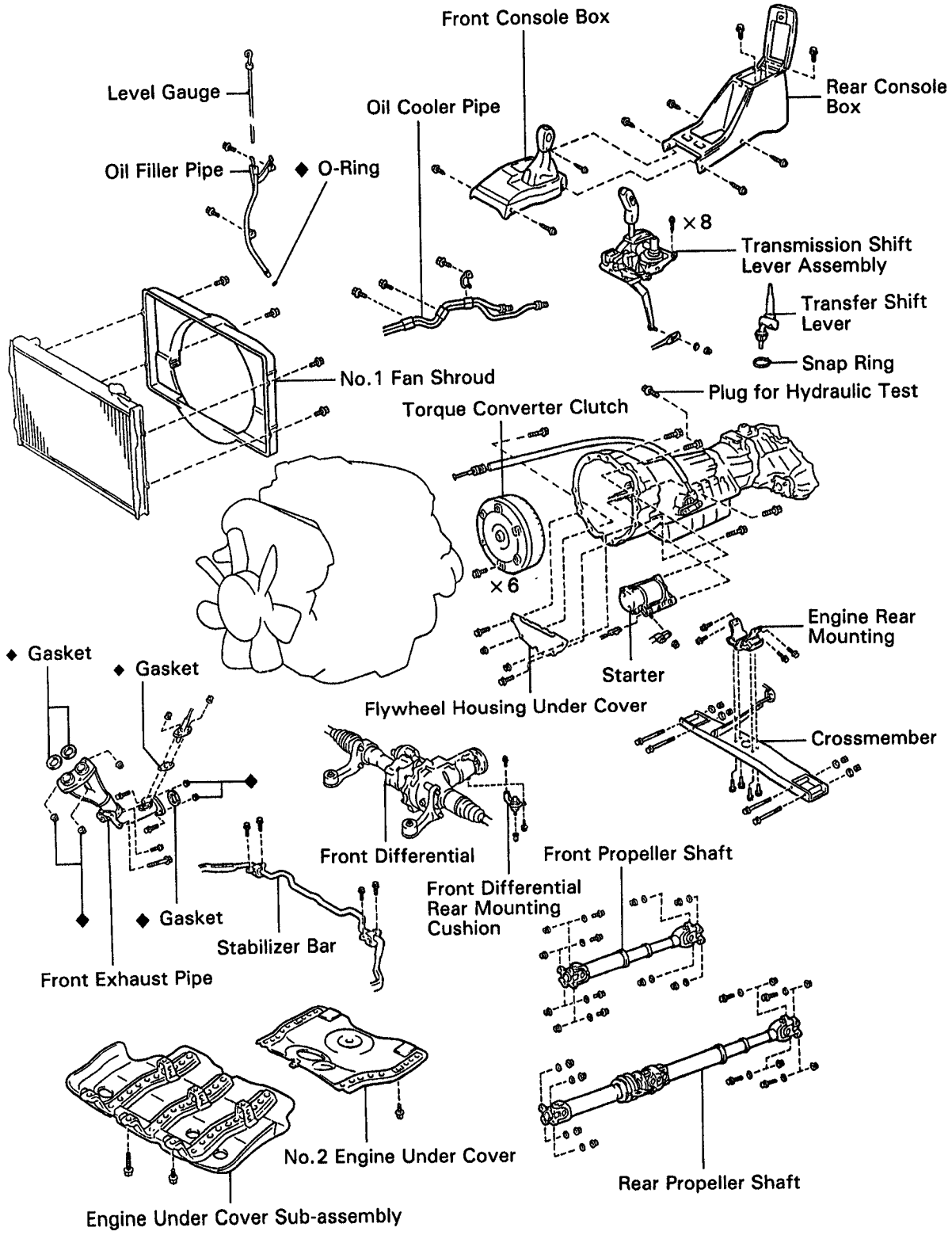

◆ Non-reusable part

008277

AT

5VZ-FE

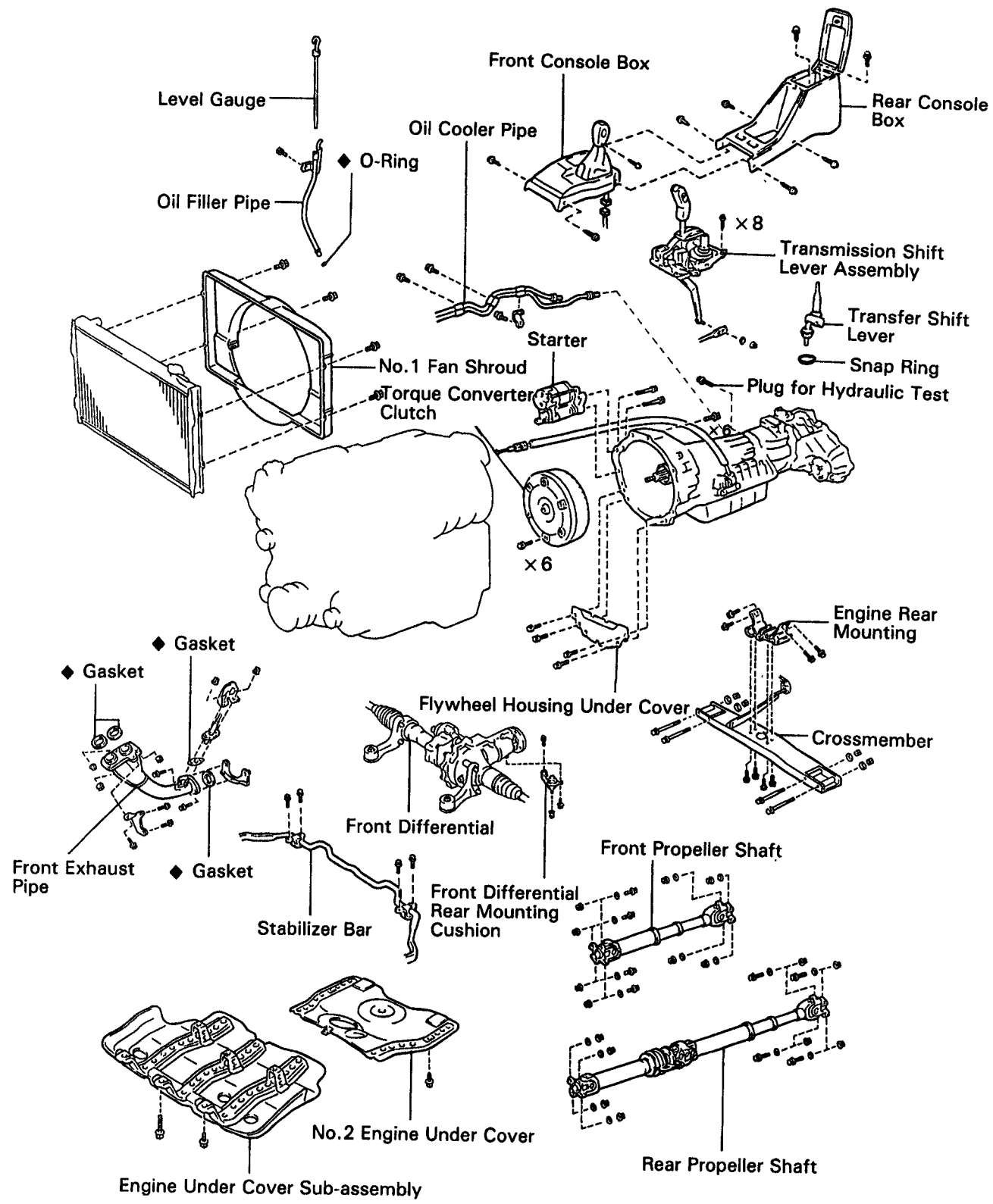

◆ Non-reusable part

008279

AT10T–01

TRANSMISSION REMOVAL

1. REMOVE ATF LEVEL GAUGE
2. REMOVE ENGINE UNDER COVER

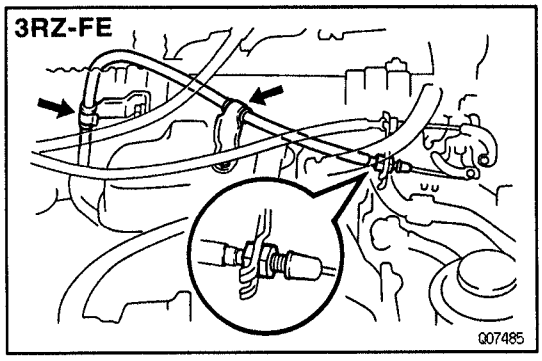

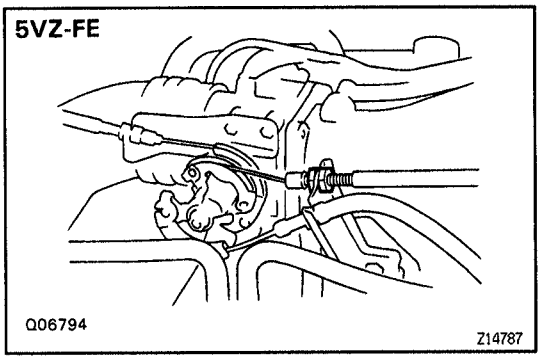

3. DISCONNECT THROTTLE CABLE
(a) Loosen the nut and disconnect the cable.
(b) Separate the throttle cable from the clamp.

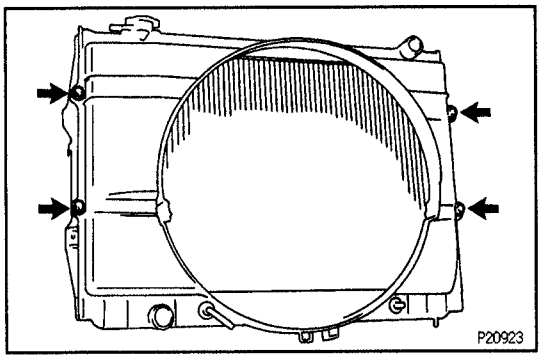

4. REMOVE NO.1 FAN SHROUD
Remove the 4 bolts and No.1 fan shroud.

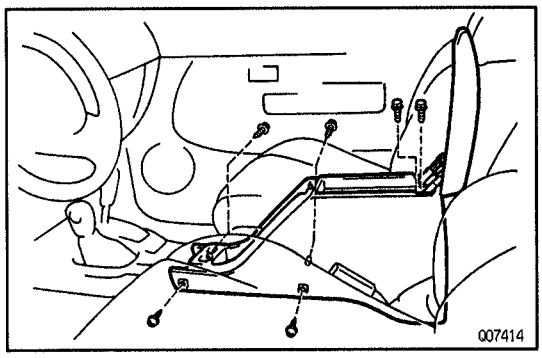

5. REMOVE TRANSMISSION SHIFT LEVER ASSEMBLY AND TRANSFER SHIFT LEVER
(a) Remove the 2 bolts, 4 screws and rear console box.

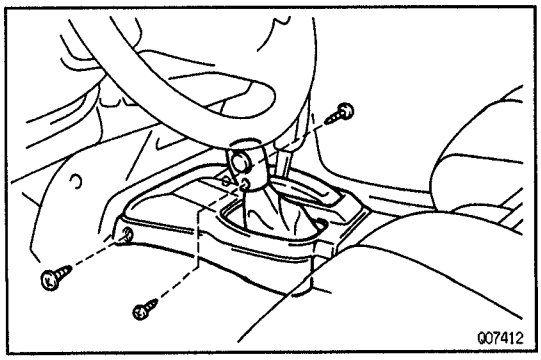

(b) Remove the 3 screws and front console box with the transfer shift lever knob.
(c) Disconnect the connectors.

AT

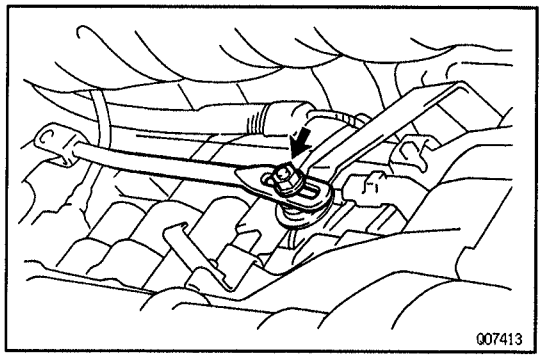

(d) Remove the nut and washer, and disconnect the shift control rod.

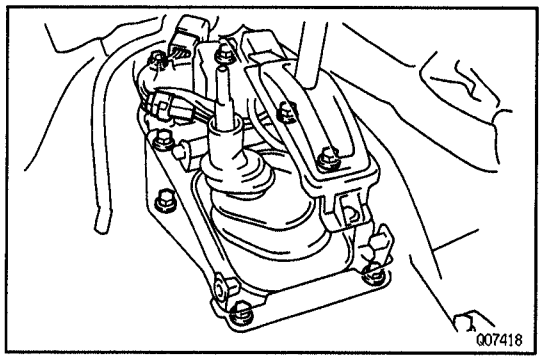

(e) Disconnect the 1 connector and remove the 8 screws and transmission shift lever assembly.

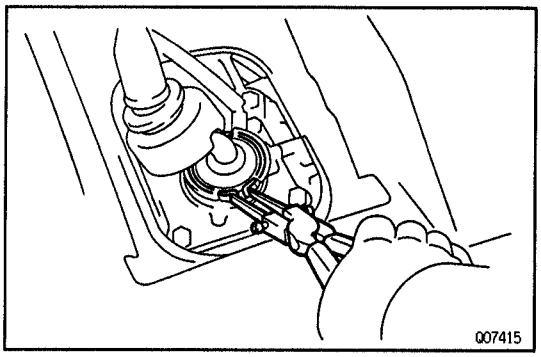

(f) Using snap ring pliers, remove the snap ring and pull out the shift lever from the transfer.
INSTALLATION HINT: Apply MP grease to the transfer shift lever.

AT

6. REMOVE OIL FILLER PIPE
3RZ–FE:
Remove the 2 bolts and oil filler pipe with the O–ring.
INSTALLATION HINT: Replace the O–ring with a new one.
5VZ–FE:
Remove the bolt and oil filler pipe with the O–ring.
INSTALLATION HINT: Replace the O–ring with a new one.

7. REMOVE FRONT AND REAR PROPELLER SHAFT
(See page PR–14)

8. REMOVE EXHAUST PIPE
(3RZ–FE: See page EG–102)
(5VZ–FE: See page EG–98)
INSTALLATION HINT: Replace the gasket and nut with new gaskets and nuts.

9. DISCONNECT SPEEDOMETER CABLE

10. DISCONNECT NO.2 VEHICLE SPEED SENSOR CONNECTOR

11. DISCONNECT SOLENOID CONNECTOR

12. DISCONNECT TRANSFER NEUTRAL POSITION SWITCH CONNECTOR

13. DISCONNECT TRANSFER L4 POSITION SWITCH CONNECTOR

14. DISCONNECT TRANSFER INDICATOR SWITCH

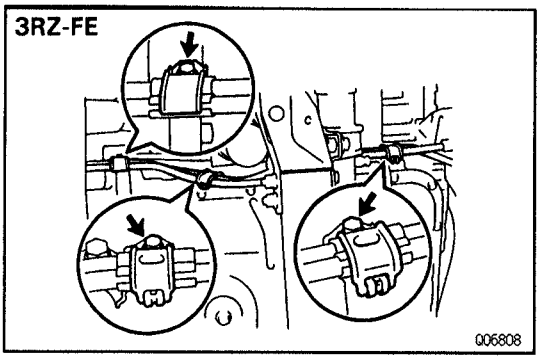

15. DISCONNECT OIL COOLER PIPE

(a) Remove the 3 bolts and clamps.

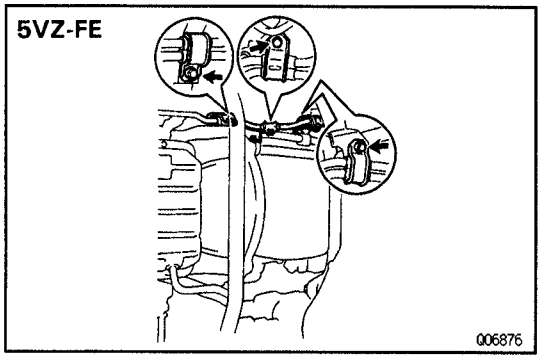

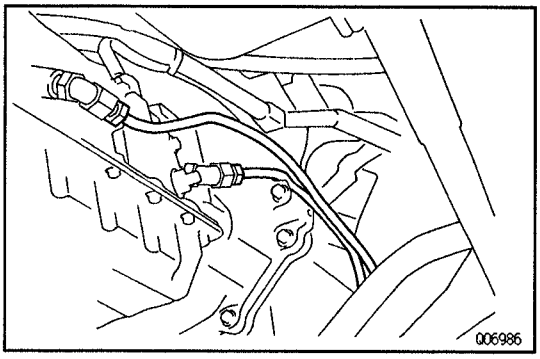

(b) Loosen the 2 union nuts and disconnect the 2 oil cooler pipes.

16. DISCONNECT ATF TEMPERATURE SENSOR CONNECTOR

17. DISCONNECT PARK/NEUTRAL POSITION SWITCH CONNECTOR

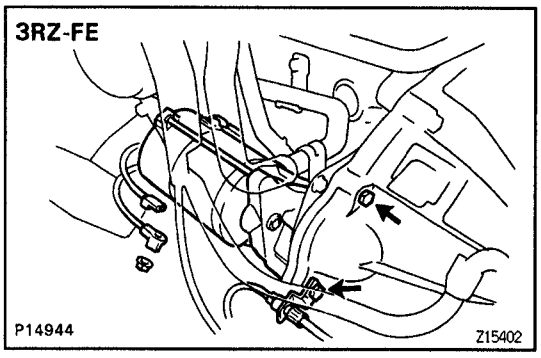

18. REMOVE STARTER

(a) Remove the nut and disconnect the connector and terminal.

(b) Remove the 2 bolts and starter.
Torque: 39 N·m (400 kgf·cm, 29 ft·lbf)

19. REMOVE 4 STABILIZER BAR BRACKET MOUNTING BOLTS (See page SA–87)

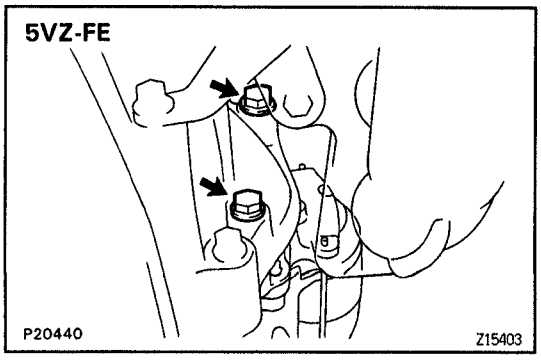

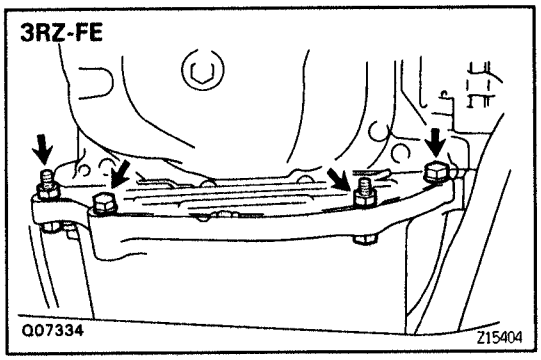

20. REMOVE TORQUE CONVERTER CLUTCH MOUNTING BOLT

(a) 3RZ–FE:
Remove the 2 nuts and bolts.
Remove the 2 bolts and flywheel housing under cover.
Torque: 37 N·m (380 kgf·cm, 27 ft·lbf)

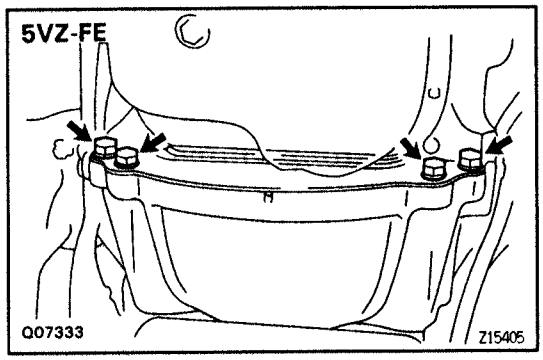

5VZ–FE:
Remove the 4 bolts and flywheel housing under cover.
Torque: 18 N·m (185 kgf·cm, 13 ft·lbf)

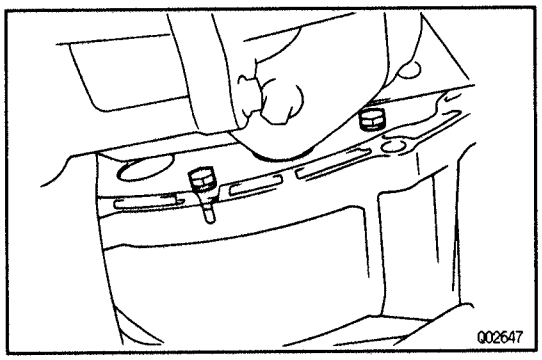

(b) While turning the crankshaft to gain access, remove the 6 bolts.
Torque: 41 N·m (420 kgf·cm, 30 ft·lbf)
INSTALLATION HINT: First install green colored bolt and then 5 other bolts.

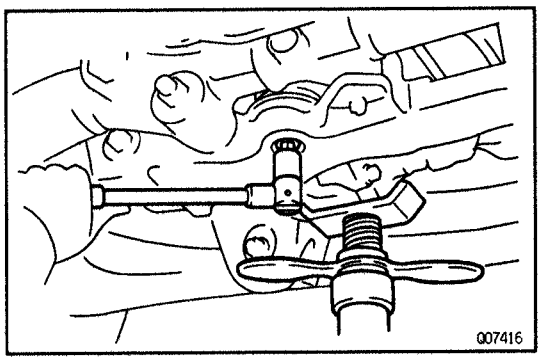

21. REMOVE FRONT DIFFERENTIAL REAR MOUNTING CUSHION

(a) Using a hexagon wrench (12 mm), remove the nut.
Torque: 87 N·m (890 kgf·cm, 64 ft·lbf)

(b) Lift up the front differential.
NOTICE: Be careful not to touch the torque converter clutch housing and front differential companion flange.

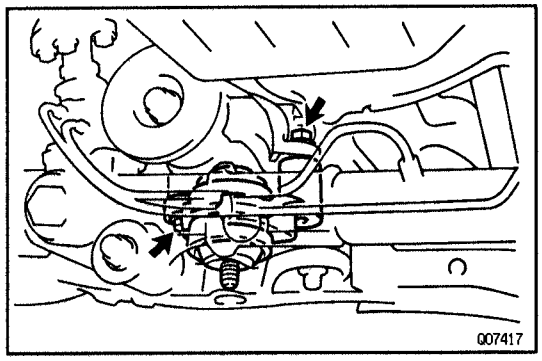

(c) Remove the 2 rear mounting cushion mounting bolts.
Torque: 108 N·m (1,100 kgf·cm, 80 ft·lbf)

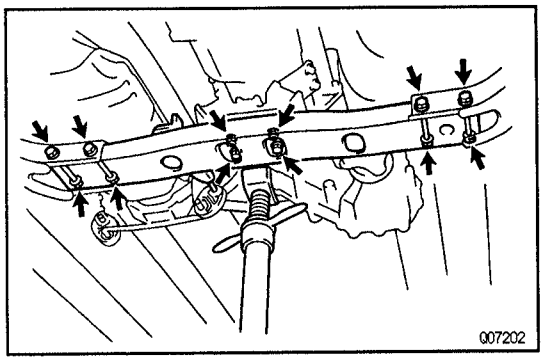

22. REMOVE CROSSMEMBER

(a) Support the transmission rear side.
(b) Remove the 4 engine rear mounting bolts.
Torque: 19 N·m (190 kgf·cm, 14 ft·lbf)
(c) Remove the 4 nuts, bolts and crossmember.
Torque: 65 N·m (660 kgf·cm, 48 ft·lbf)
(d) Support the transmission with a jack.

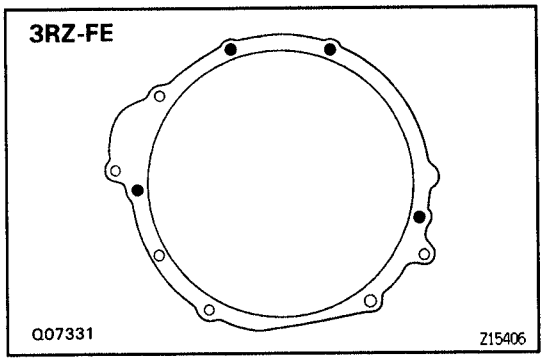

23. REMOVE TRANSMISSION

(a) Lower the transmission rear side.
(b) Separate the wire harness from the transmission.
(c) 3RZ–FE:
Remove the 4 bolts and transmission.
Torque: 71 N·m (730 kgf·cm, 53 ft·lbf)

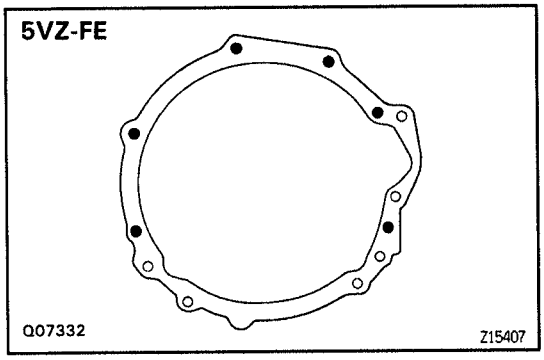

5VZ–FE:
Remove the 6 bolts and transmission.
Torque: 71 N·m (730 kgf·cm, 53 ft·lbf)

AT

AT0VQ–06

TOQUE CONVERTER CLUTCH TRANSMISSION INSTALLATION

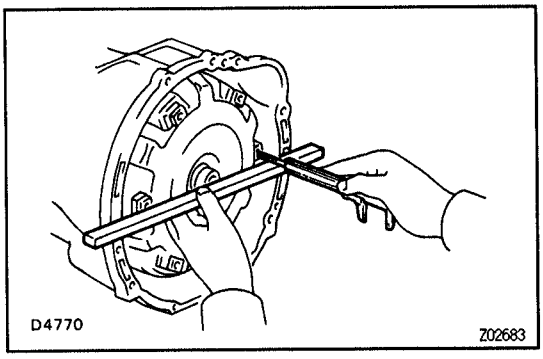

Using calipers and a straight edge, measure from the installed surface of the transmission housing.
Correct distance:
3RZ–FE: More than 31.75 mm (1.2500 in.)
5VZ–FE: More than 17.95 mm (0.7067 in.)

AT0VR–06

TORQUE CONVERTER CLUTCH AND DRIVE PLATE INSPECTION

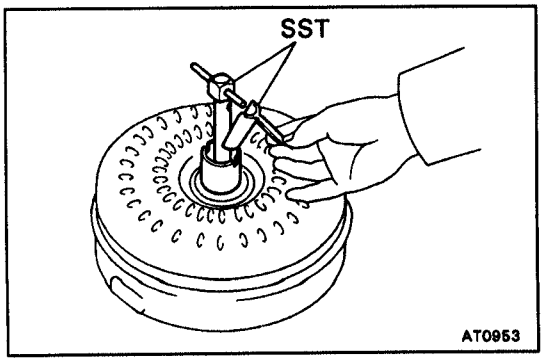

1. INSPECT ONE–WAY CLUTCH

(a) Install SST in the inner race of one–way clutch.
SST 09350–30020 (09351–32010)
(b) Install SST so that it fits in the notch of the converter hub and outer race of the one–way clutch.
SST 09350–30020 (09351–32010)

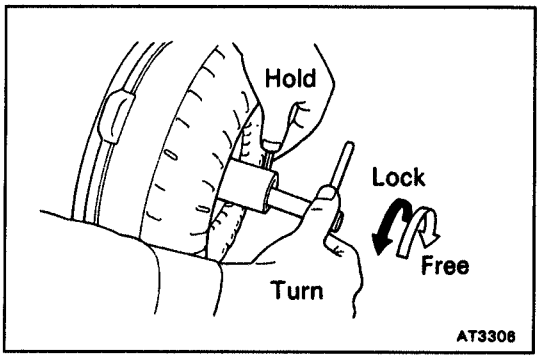

(c) With the torque converter clutch standing on its side, the clutch locks when turned counterclockwise, and rotates freely and smoothly clockwise.
If necessary, clean the converter and retest the clutch.
Replace the converter if the clutch still fails the test.

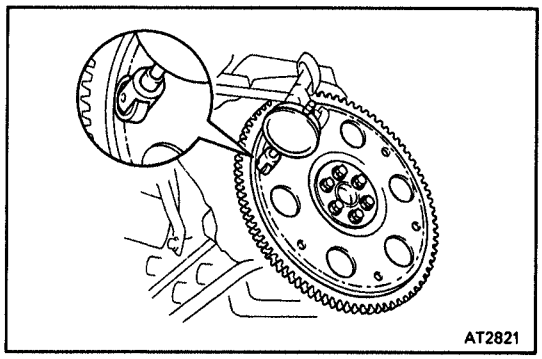

2. MEASURE DRIVE PLATE RUNOUT AND INSPECT RING GEAR

Set up a dial indicator and measure the drive plate runout.

Maximum runout: 0.20 mm (0.0079 in.)

If runout is not within specification, replace the drive plate.

Torque:

3RZ–FE: 74 N·m (750 kgf·cm, 54 ft·lbf)

5VZ–FE: 83 N·m (850 kgf·cm, 61 ft·lbf)

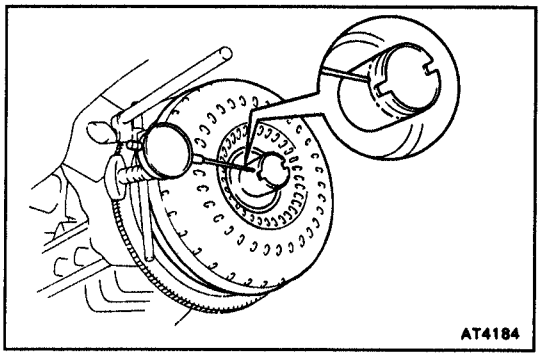

3. MEASURE TORQUE CONVERTER CLUTCH SLEEVE RUNOUT

Temporarily mount the torque converter clutch to the drive plate. Set up a dial indicator.

Maximum runout: 0.30 mm (0.0118 in.)

If runout is not within specification, try to correct by reorienting the installation of the converter clutch.

HINT: Mark the position of the converter clutch to ensure correct installation.

TRANSMISSION INSTALLATION

AT10U–01

Installation is in the reverse order of removal.

HINT:

- After installation, adjust the shift lever position and throttle cable. (See page AT–43)
- Fill and check fluid level. (See page AT–42)

SHIFT LOCK SYSTEM
COMPONENT PARTS LOCATION

AT0P0–05

Column Shift:

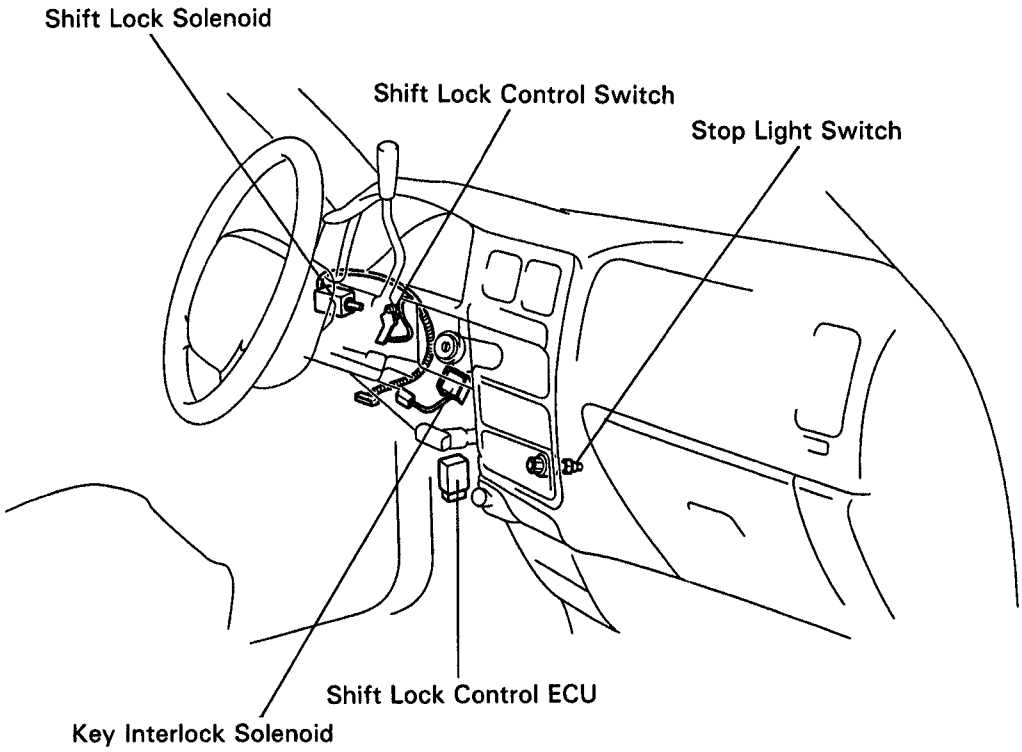

Floor Shift:

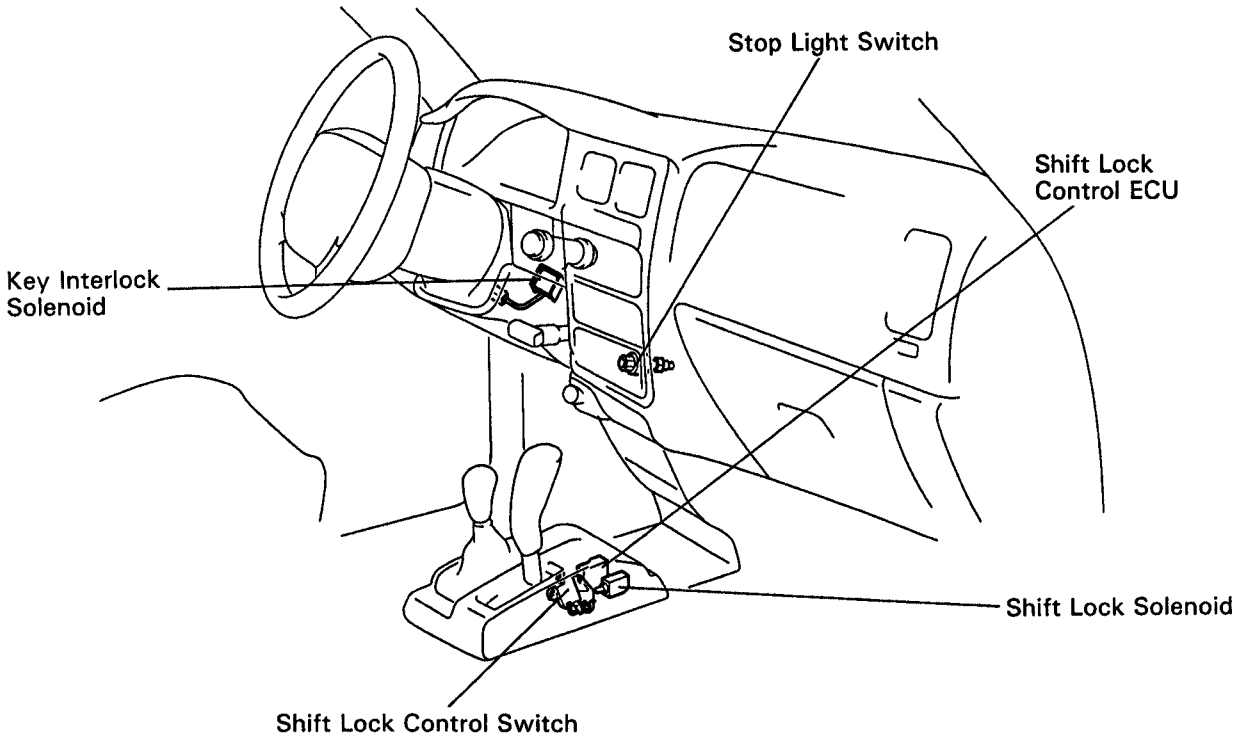

Q07187
Q07500

Z15533

AT

WIRING DIAGRAM

Column Shift:

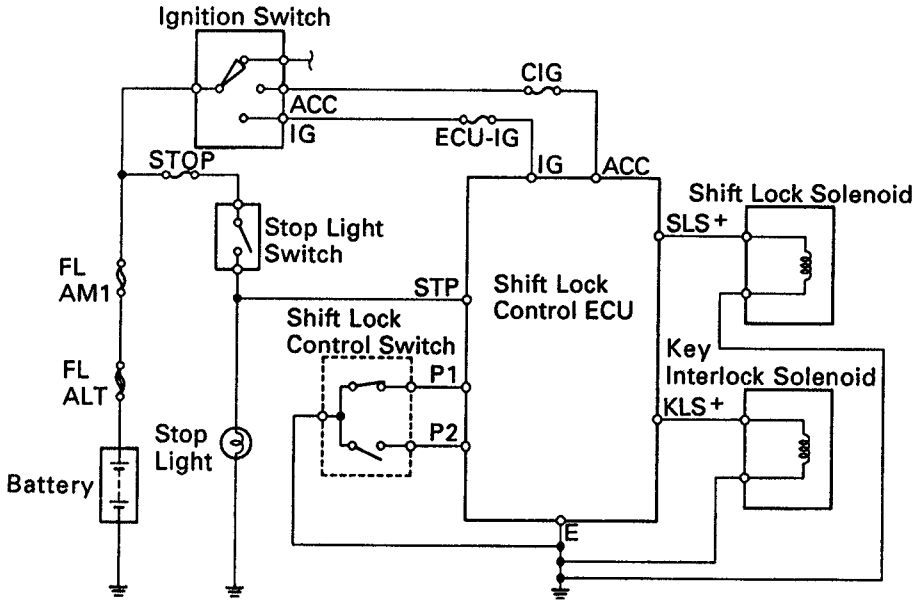

AT

Floor Shift:

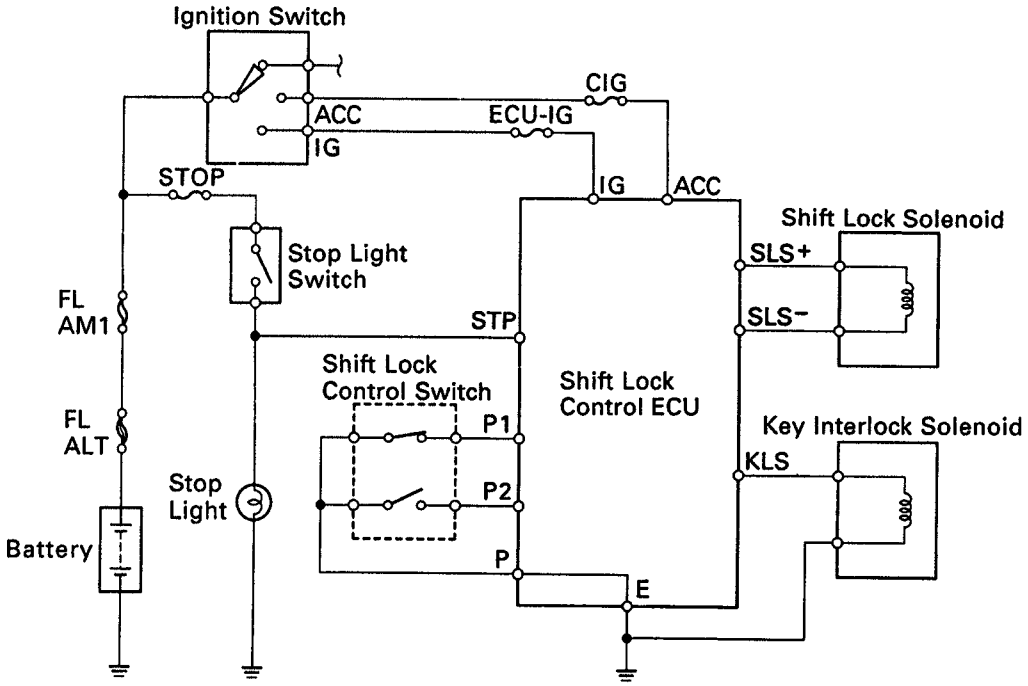

Q07422
Q07040

Z16650

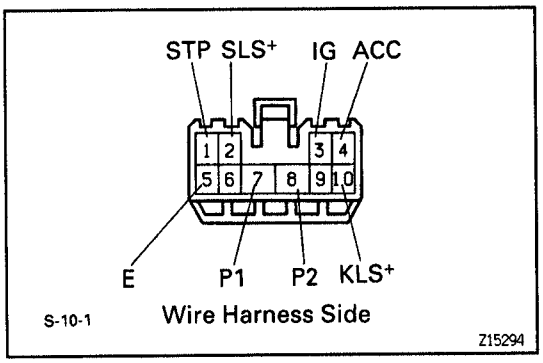

ELECTRONIC CONTROL COMPONENTS INSPECTION

AT0XL-02

1. Column shift:
INSPECT SHIFT LOCK CONTROL ECU
Using a voltmeter, measure the voltage at each terminal.

Terminal	Measuring Condition	Voltage (V)
ACC – E	IG SW ACC	10 – 14
IG – E	IG SW ON	10 – 14
STP – E	Depressing brake pedal	10 – 14
KLS+ – E	① IG SW ACC and P position	0
	② IG SW ACC and except P position	10 – 14
	③ (After–approx. 1 second)	6 – 9
SLS+ – E	① IG SW ON and P position	0
	② Depress brake pedal	8.5 – 13.5
	③ Except P position	0
P1 – E	① IG SW ON, P position and depress brake pedal	0
	② Shift except P position under conditions above	9 – 13.5
P2 – E	① IG SW ACC and P position	9 – 13.5
	② Shift except P position under conditions above	0

AT

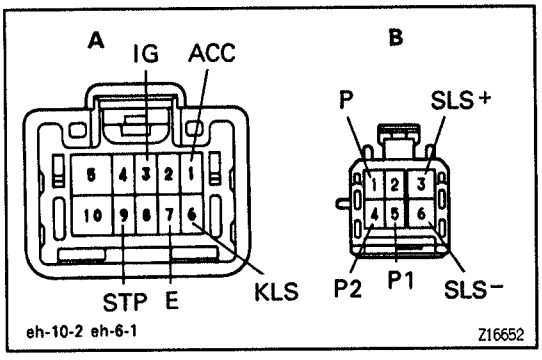

2. Floor shift:
INSPECT SHIFT LOCK CONTROL ECU
Using a voltmeter, measure the voltage at each terminal.

Connector	Terminal	Measuring condition	Voltage (V)
A	ACC – E	IG SW ACC	10 – 14
	IG – E	IG SW ON	10 – 14
	STP – E	Brake pedal depressed	10 – 14
	KLS – E	① IG SW ACC and P position	0
		② R, N, D, 2, L position	7.5 – 11
		③ R, N, D, 2, L position (After - approx. 1 second)	6 – 9.5
B	SLS+ – SLS−	① IG SW ON and P position	0
		② Brake pedal depressed	8 – 13.5
		③ Brake pedal depressed (After - approx. 20 seconds)	6 – 8.5
		④ R, N, D, 2, L position	0
	P1 – P	① IG SW ON, P position and depress brake pedal	0
		② R, N, D, 2, L position	9 – 13.5
	P2 – P	① IG SW ACC and P position	9 – 13.5
		② R, N, D, 2, L position	0

V07133

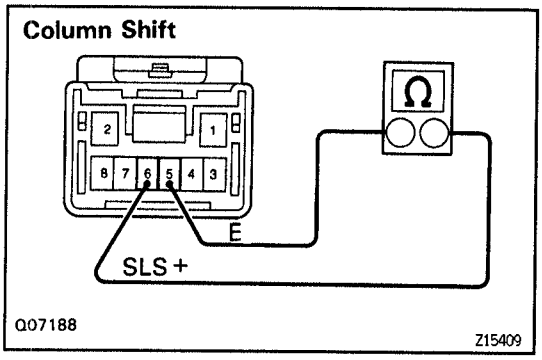

AT

3. INSPECT SHIFT LOCK SOLENOID

(a) Disconnect the solenoid connector.

(b) Using an ohmmeter, measure the resistance at each terminal.

Standard resistance: 20 – 28 Ω

If resistance value is not as specified, replace the solenoid.

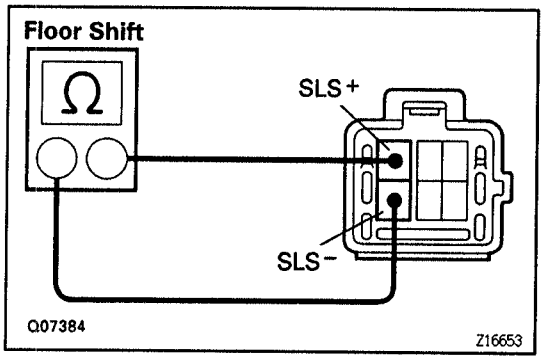

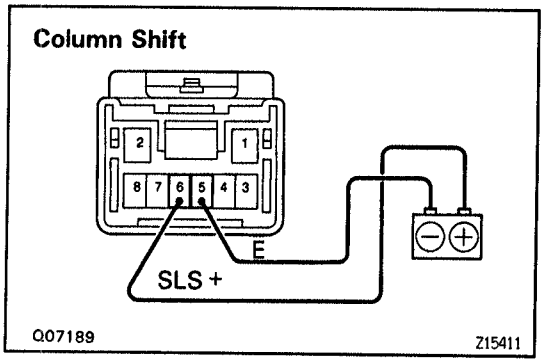

(c) Apply battery positive voltage at each terminal. At this time, confirm that the solenoid operates.

If the solenoid does not operate, replace the solenoid.

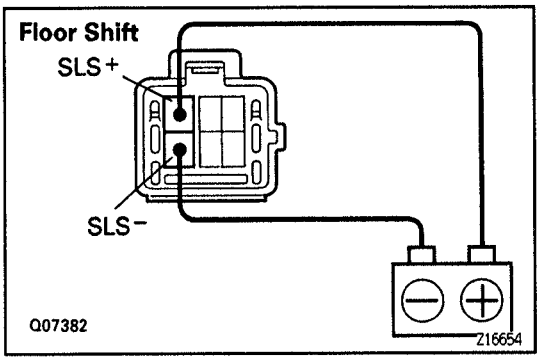

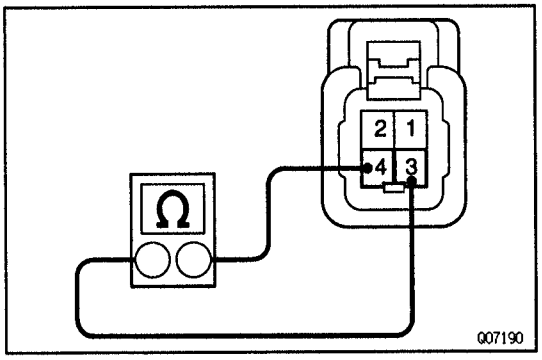

4. INSPECT KEY INTERLOCK SOLENOID

(a) Disconnect the solenoid connector.

(b) Using an ohmmeter, measure the resistance between terminals 3 and 4.

Standard resistance: 12 – 17 Ω

If resistance value is not as specified, replace the solenoid.

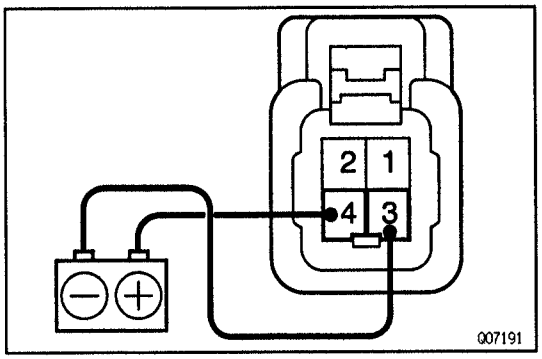

(c) Touch the solenoid with your finger and check that solenoid operation can be felt when battery positive voltage is applied intermittently to the terminals 1 and 2.

If the solenoid does not operate, replace the solenoid.

AT

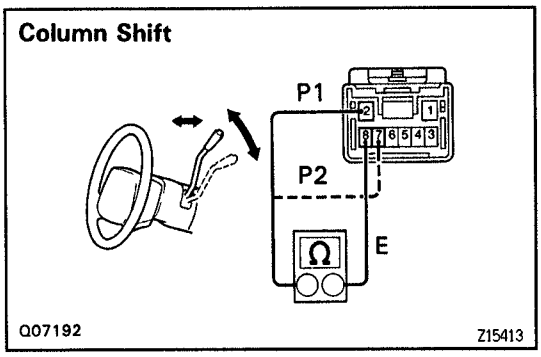

5. INSPECT SHIFT LOCK CONTROL SWITCH

Inspect that there is continuity between each terminal.

Shift position	Tester condition to terminal number	Specified value
*1 P position	P1 – P or E	Continuity
*2 P position	P1 – P or E P2 – P or E	Continuity
R, N, D, 2, L position	P2 – P or E	Continuity

*1: Floor shift release button is not pushed or column shift lever is not pulled.

*2: Floor shift release button is pushed or column shift lever is not pulled toward you.

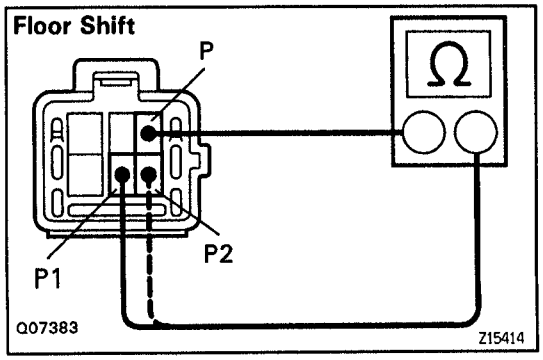

TROUBLESHOOTING

HOW TO PROCEED WITH TROUBLESHOOTING ····· AT–33
CUSTOMER PROBLEM ANALYSIS CHECK SHEET ····· AT–34
DIAGNOSIS SYSTEM ····· AT–35
DIAGNOSIS INSPECTION (NORMAL MODE) ····· AT–36
DIAGNOSIS INSPECTION (CHECK MODE) ····· AT–37
CHECK FOR INTERMITTENT PROBLEMS ···· AT–39
DTC CHART ····· AT–40
ROAD TEST ····· AT–41
PRELIMINARY CHECK ····· AT–42
MECHANICAL SYSTEM TEST ····· AT–45
HYDRAULIC TEST ····· AT–46
MANUAL SHIFTING TEST ····· AT–48
STANDARD VALUE OF ECM TERMINAL ···· AT–51
MATRIX CHART OF PROBLEM SYMPTOMS ····· AT–55
CIRCUIT INSPECTION ····· AT–62
DTC P0500 Vehicle Speed Sensor Malfunction (No.1 Vehicle Speed Sensor) ····· AT–62
DTC P0710 Transmission Fluid Temperature Sensor Malfunction (ATF Temperature Sensor) ····· AT–62
DTC P0750, P0755 Shift Solenoid "A/B" Malfunction (Shift Solenoid Valve No.1/No.2) ····· AT–63
DTC P0753, P0758 Shift Solenoid "A/B" Electrical Malfunction (Shift Solenoid Valve No.1/No.2) ····· AT–64
DTC P0770 Shift Solenoid "E" Malfunction (Shift Solenoid Valve SL) ····· AT–67
DTC P0773 Shift Solenoid "E" Electrical Malfunction (Shift Solenoid Valve SL) ····· AT–68
DTC P1700 Speed Sensor No.2 Circuit Malfunction (No.2 Vehicle Speed Sensor) ····· AT–71
DTC P1780 Park/Neutral Position Switch Malfunction ····· AT–73
O/D Cancel Signal Circuit ····· AT–76
O/D Main Switch & O/D OFF Indicator Light Circuit ····· AT–78
Pattern Select Switch Circuit ····· AT–78
Stop Light Switch Circuit ····· AT–83
A/T. P. (Automatic Transmission Parking) Indicator Circuit ····· AT–85

HOW TO PROCEED WITH TROUBLESHOOTING

Troubleshoot in accordance with the procedure on the following pages.

Items inside // are titles of pages in this manual, with the page number indicated in the bottom portion. See the indicated pages for detailed explanations.

Step ②, ③, ④, ⑥, ⑨, ⑮, ⑱ : Diagnostic steps permitting the use of the TOYOTA hand-held tester or TOYOTA break-out box.

Vehicle Brought to Workshop

↓

① Customer Problem Analysis
P. AT-34

↓

② **Connect the OBD II Scan Tool or TOYOTA Hand-Held Tester to DLC3**
If your display shows "UNABLE TO CONNECT TO VEHICLE" when you have connected the scan tool / TOYOTA hand-held tester, inspect DLC3 P. AT-38

↓

③ **Check DTC and Freezed Frame Data (Precheck)**
Record or Print DTC and Freezed Frame Data P. AT-36

↓

④ **Clear DTC and Freezed Frame Data P. AT-37**

↓

⑤ Visual Inspection

↓

⑥ **Setting the Check Mode Diagnosis P. AT-37**

↓

⑦ Problem Symptom Confirmation

Symptom does not occur → ⑧ Symptom Simulation P. IN-18 → Symptom occurs

Symptom occurs ↓

⑨ **DTC Check P. AT-37**

OK Code → ⑪ Preliminary Check P. AT-42 → NG

OK ↓

⑫ Mechanical System Tests P. AT-45 → NG

OK ↓

⑬ Manual Shifting Test P. AT-48 → NG

OK

⑩ DTC Chart P. AT-40

⑭ Matrix Chart of Problem Symptoms – P. AT-55

Chapter 1 (Electronic) P. AT-56 → OK → Chapter 2 (On-Vehicle) P. AT-58 → OK → Chapter 3 (Off-Vehicle) P. AT-60

NG NG NG

⑮ **Circuit Inspection**
- **O/D Cancel Signal Check**
- **Stop Light Signal Check**

P. AT-62 ~ AT-86

⑯ Parts Inspection

↓

Identification of Problem → ⑰ Repair → ⑱ **Confirmation Test** → END

AT

V06676

CUSTOMER PROBLEM ANALYSIS CHECK SHEET

AX09Q-1A

Electronically - controlled Automatic Transmission Check Sheet

Inspector's Name :

Customer's Name		Registration No.	
		Registration Year	/ /
		Frame No.	
Date Vehicle Brought In	/ /	Odometer Reading	km mile

Date Problem Occurred	/ /
How Often Does Problem Occur?	☐ Continuous ☐ Intermittent (times a day)

Symptoms	☐ Vehicle does not move, (☐ Any position ☐ Particular position)
	☐ No up-shift (☐ 1st → 2nd ☐ 2nd → 3rd ☐ 3rd → O/D)
	☐ No down-shift (☐ O/D → 3rd ☐ 3rd → 2nd ☐ 2nd → 1st)
	☐ Lock-up malfunction
	☐ Shift point too high or too low.
	☐ Harsh engagement (☐ N → D ☐ Lock-up ☐ Any drive position)
	☐ Slip or shudder
	☐ No Kick-down
	☐ Others ( )

Check Item	Condition of MIL	☐ Normal ☐ Remains ON

DTC Check	1st Time	☐ Normal code ☐ Malfunction code (Code)
	2nd Time	☐ Normal code ☐ Malfunction code (Code)

V06824

AX0RK–0F

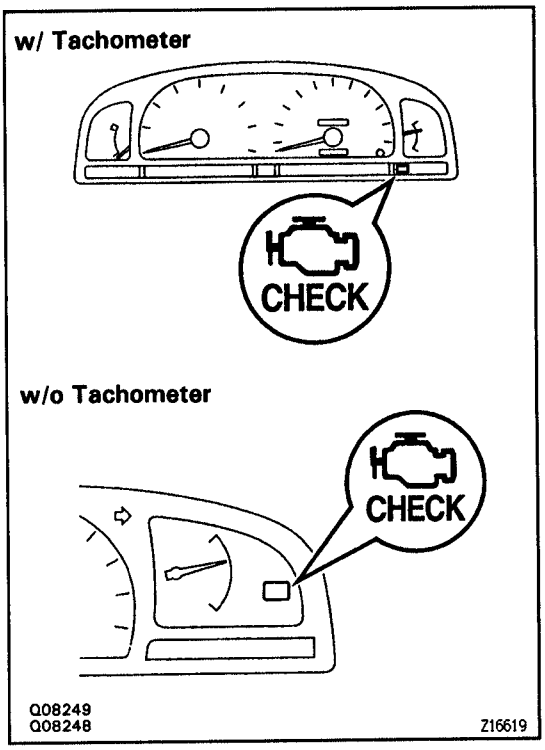

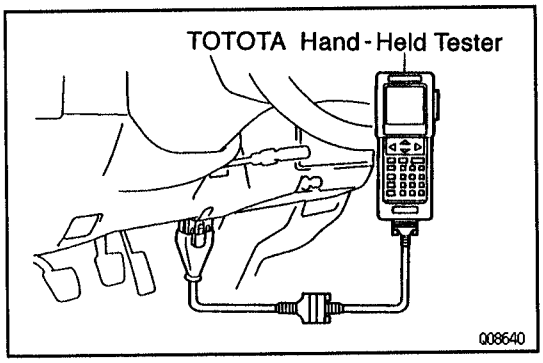

DIAGNOSIS SYSTEM

DESCRIPTION

When troubleshooting OBD II vehicles, the only difference from the usual troubleshooting procedure is that you connect to the vehicle the OBD II scan tool complying with SAE J1978 or TOYOTA hand–held tester, and read off various data output from the vehicle's ECM.

OBD II regulations require that the vehicle's on–board computer lights up the Malfunction Indicator Lamp (MIL) on the instrument panel when the computer detects a malfunction in the computer itself or in drive system components which affect vehicle emissions. In addition to the MIL lighting up when a malfunction is detected, the applicable DTCs prescribed by SAE J 2012 are recorded in the ECM memory.

(3RZ–FE: See page EG–192)
(5VZ–FE: See page EG–200)

If the malfunction does not reoccur in 3 trips, the MIL goes off but the DTCs remain recorded in the ECM memory.

To check the DTCs, connect the OBD II scan tool or TOYOTA hand–held tester to DLC3 on the vehicle. The OBD II scan tool or TOYOTA hand–held tester also enables you to erase the DTCs and check freezed frame data and various forms of engine data. (For operating instructions, see the OBD II scan tool's instruction book.)

DTCs include SAE controlled codes and Manufacturer controlled codes.

SAE controlled codes must be set as prescribed by the SAE, while Manufacturer controlled codes can be set freely by the manufacturer within the prescribed limits. (See DTC chart on page AT–40)

The diagnosis system operates in normal mode during normal vehicle use, and also has a check mode for technicians to simulate malfunction symptoms and perform troubleshooting. Most DTCs use 2 trip detection logic(*) to prevent erroneous detection. By switching the ECM to check mode when troubleshooting, the technician can cause the MIL to light up and for a malfunction that is only detected once or momentarily. (TOYOTA hand–held tester) (See page AT–36)

AT

* 2 trip detection logic:
When a logic malfunction is first detected, the malfunction is temporarily stored in the ECM memory. If the same malfunction is detected again during the second test drive, this second detection causes the MIL to light up.

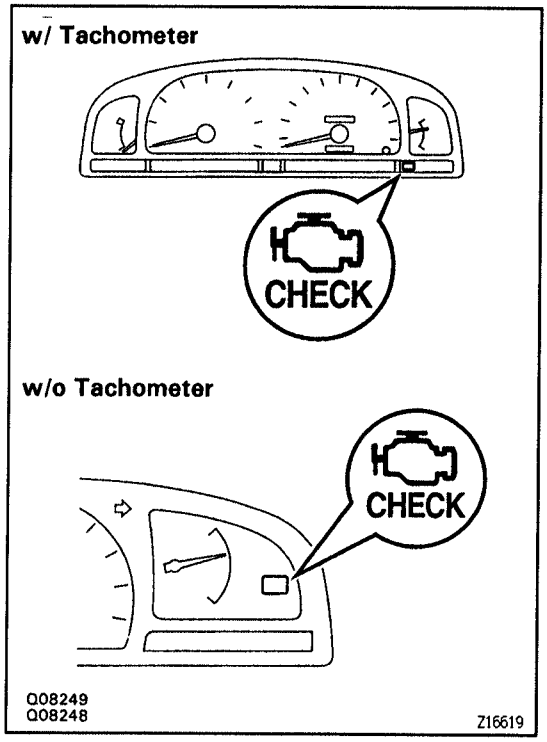

DIAGNOSIS INSPECTION (NORMAL MODE) AT10V-01

MIL CHECK

1. The MIL comes on when the ignition switch is turned ON and the engine is not running.
   HINT: If the MIL does not light up, troubleshoot the combination meter (See page BE–34)
2. When the engine is started, the MIL should go off. If the lamp remains on, the diagnosis system has detected a malfunction or abnormality in the system.

DTC CHECK

NOTICE (TOYOTA hand–held tester only): When the diagnostic system is switched from normal mode to check mode, it erases all DTCs and freezed frame data recorded in normal mode. So before switching modes, always check the DTCs and freezed frame data, and note them down.

1. Prepare the OBD II scan tool (complying with SAE J 1978) or TOYOTA hand–held tester.
2. Connect the OBD II scan tool or TOYOTA hand–held tester to DLC3 in the fuse box at the lower right of the instrument panel.
3. Turn the ignition switch ON and turn the OBD II scan tool or TOYOTA hand–held tester switch ON.
4. Use the OBD II scan tool or TOYOTA hand–held tester to check the DTCs and freezed frame data. Note them down. (For operating instructions, see the OBD II scan tool's instruction book.)
5. See page AT–40 to confirm the details of the DTCs.
   NOTICE: When simulating symptoms with an OBD II scan tool (excluding TOYOTA hand–held tester) to check the DTCs, use normal mode. For codes on the DTC chart subject to "2 trip detection logic", turn the ignition switch off after the symptoms have been simulated for the first time. Then repeat the simulation process again. When the program has been simulated twice, the MIL lights up and the DTCs are recorded in the ECM.

DIAGNOSIS INSPECTION (CHECK MODE) AT10W-01

TOYOTA hand–held tester only

Compared to the normal mode, the check mode has high sensing ability to detect malfunctions.

Furthermore, the same diagnostic items which are detected in the normal mode can also be detected in the check mode.

DTC CHECK

1. Initial conditions.
(a) Battery positive voltage 11 V or more.
(b) Throttle valve fully closed.
(c) Transmission in PARK position.
(d) Air conditioning switched off.
2. Turn ignition switch OFF.
3. Prepare the TOYOTA hand–held tester.
4. Connect the TOYOTA hand–held tester to DLC3 in the fuse box at the lower right of the instrument panel.

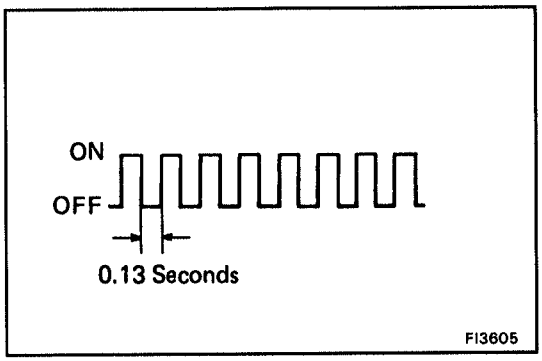

5. Turn the ignition switch ON and switch the TOYOTA hand–held tester ON.
6. Switch the TOYOTA hand–held tester from normal mode to check mode. (Check that the MIL flashes.)
7. Start the engine. (The MIL goes off after the engine starts.)
8. Simulate the conditions of the malfunction described by the customer.
NOTICE: Leave the ignition switch ON until you have checked the DTCs etc.
9. After simulating the malfunction conditions, use the TOYOTA hand – held tester diagnosis selector to check the DTCs and freezed frame data, etc.
HINT: Take care not to turn the ignition switch OFF. Turning the ignition switch off switches the diagnosis system from check mode to normal mode, so all DTCs, etc. are erased.
10. After checking the DTC, inspect the applicable circuit.

DTC CLEARANCE

The following actions will erase the DTCs and freezed frame data.

Operating the OBD II scan tool (complying with SAE J 1978) or TOYOTA hand–held tester to erase the codes. (See the OBD II scan tool's instruction book for operating instructions.)

AT

NOTICE: If the TOYOTA hand–held tester switches the ECM from normal mode to check mode or vice–versa, or if the ignition switch is turned from ON to ACC or OFF during check mode, the DTCs and freezed frame data will be erased.

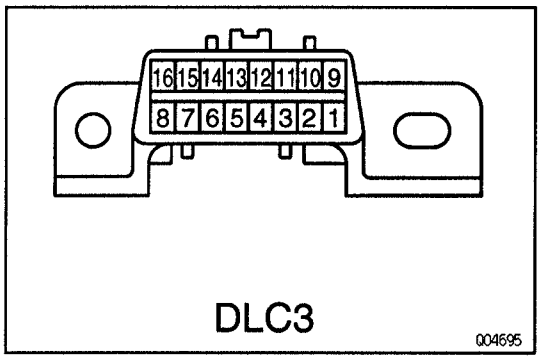

DLC3 INSPECTION

The vehicle's ECM uses V.P.W. (Variable Pulse Width) for communication to comply with SAE J1850. The terminal arrangement of DLC3 complies with SAE J 1962 and matches the V.P.W. format.

Terminal No.	Connection/Voltage or Resistance	Condition
2	Bus ⊕ Line	During communication
4	Chassis Ground/↔ Body 1 Ω or less	Always
5	Signal Ground/↔ Body 1 Ω or less	Always
16	Battery Positive/↔ Body 1 Ω or less Battery Positive/↔Body 9 ~ 14 V	Always

HINT: If your display shows "UNABLE TO CONNECT TO VEHICLE" when you have connected the cable of the OBD II scan tool or TOYOTA hand–held tester to DLC 3, turned the ignition switch ON and operated the scan tool, there is a problem on the vehicle side or tool side.

(1) If communication is normal when the tool is connected to another vehicle, inspect DLC3 on the original vehicle.

(2) If communication is still impossible when the tool is connected to another vehicle, the problem is probably in the tool itself, so consult the Service Department listed in the tool's instruction manual.

CHECK FOR INTERMITTENT PROBLEMS AT10X-01

TOYOTA hand–held tester only

By putting the vehicle's ECM in check mode, 1 trip detection logic is possible instead of 2 trip detection logic and sensitivity to detect open circuits is increased. This makes it easier to detect intermittent problems.

CLEAR DTCs

See page AT–37

SET CHECK MODE

See page AT–37

DO A SIMULATION TEST

See page IN–18

CONNECTOR CONNECTION AND TERMINAL INSPECTION

See page IN–24

VISUAL CHECK AND CONTACT PRESSURE CHECK

See page IN–25

CONNECTOR HANDLING

See page IN–26

AT10Y-01

DTC CHART

DTC NO. (See page)	Detection Item	Trouble Area	MIL*	Memory
P0500 3RZ-FE : EG-276 5VZ-FE : EG-287	Vehicle Speed Sensor Malfunction (No. 1 Vehicle Speed Sensor)	• Open or short in No. 1 vehicle speed sensor circuit • No. 1 vehicle speed sensor • ECM	●	○
P0710 (AT-62)	Transmission Fluid Temperature Sensor Malfunction (ATF Temperature Sensor)	• Open or short in ATF temperature sensor circuit • ATF temperature sensor • ECM	—	○
P0750 (AT-63)	Shift Solenoid "A" Malfunction (Shift Solenoid Valve No. 1)	• Shift solenoid valve No. 1 is stuck or closed • Valve body is blocked up or stuck	●	○
P0753 (AT-64)	Shift Solenoid "A" Electrical Malfunction (Shift Solenoid Valve No. 1)	• Open or short in shift solenoid valve No. 1 circuit • Shift solenoid valve No. 1 • ECM	●	○
P0755 (AT-63)	Shift Solenoid "B" Malfunction (Shift Solenoid Valve No. 2)	• Shift solenoid valve No. 2 is stuck or closed • Valve body is blocked up or stuck	●	○
P0758 (AT-64)	Shift Solenoid "B" Electrical Malfunction (Shift Solenoid Valve No. 2)	• Open or short in shift solenoid valve No. 2 circuit • Shift solenoid valve No. 2 • ECM	●	○
P0770 (AT-67)	Shift Solenoid "E" Malfunction (Shift Solenoid Valve SL)	• Shift solenoid valve SL is stuck or closed • Valve body is blocked up or stuck • Lock up clutch	●	○
P0773 (AT-68)	Shift Solenoid "E" Electrical Malfunction (Shift Solenoid Valve SL)	• Open or short in shift solenoid valve SL circuit • Shift solenoid valve SL • ECM	●	○
P1700 (AT-71)	Speed Sensor No. 2 Circuit Malfunction (No. 2 Vehicle Speed Sensor)	• Open or short in No. 2 vehicle speed sensor circuit • No. 2 vehicle speed sensor • ECM	●	○
P1780 (AT-73)	Park/Neutral Position Switch Malfunction	• Short in park/neutral position switch circuit • Park/neutral position switch • ECM	●	○

*: — ····· MIL does not light up
● ····· MIL light up

AT

V07017

AT10Z-01

ROAD TEST

NOTICE: Perform the test at normal ATF operating temperature 50 – 80 °C (122 – 176 °F).

1. D POSITION TEST (NORM AND PWR PATTERN)

Shift into the D position and fully depress the accelerator pedal and check the following points:

(a) Check to see that the 1→2, 2→3 and 3→O/D up–shift take place at the shift point shown in the automatic shift schedule. (See page AT–87)

HINT:

(1) O/D Gear Up–shift Prohibition Control
- Coolant temp. is 60°C (140°F) or less
- If there is a 10 km/h (6 mph) difference between the set cruise control speed and vehicle speed.
- O/D main switch is pushed ON (During O/D OFF indicator light lights up.)

(2) O/D Gear Lock–up Prohibition Control
- Brake pedal is depressed.
- Coolant temp. is 60 °C (140 °F) or less.

(b) Check for shift shock and slip.
Check for shock and slip at the 1→2, 2→3 and 3→O/D up–shifts.

(c) Check for abnormal noises and vibration.
Run at the D position lock–up or O/D gear and check for abnormal noises and vibration.
HINT: The check for the cause of abnormal noises and vibration must be done very thoroughly as it could also be due to loss of balance in the differential and torque converter clutch, etc..

(d) Check kick–down operation.
While running in the D position, 2nd, 3rd and O/D gears, check to see that the possible kick–down vehicle speed limits for 2→1, 3→2 and O/D→3 kick–downs conform to those indicated on the automatic shift schedule. (See page AT–87)

(e) Check abnormal shock and slip at kick–down.

(f) Check the lock–up mechanism.
(1) Drive in O/D gear of D position, at a steady speed (lock–up ON) of about 70 km/h (43 mph).
(2) Lightly depress the accelerator pedal and check that the engine RPM does not change abruptly.
If there is a big jump in engine RPM, there is no lock–up.

2. 2 POSITION TEST

Shift into the 2 position and fully depress the accelerator pedal and check the following points:

(a) Check up–shift operation.
Check to see that the 1→2 up–shift takes place and that the shift point conforms to the automatic shift schedule. (See page AT–87)
HINT: There is no O/D up–shift and lock–up in the 2 position.

(b) Check engine braking.
While running in the 2 position and 2nd gear, release the accelerator pedal and check the engine braking effect.

(c) Check for abnormal noises during acceleration and deceleration, and for shock at up–shift and down–shift.

3. L POSITION TEST

Shift into the 2 position and fully depress the accelerator pedal and check the following points:

(a) Check no up–shift.
While running in the L position, check that there is no up–shift to 2nd gear.

(b) Check engine braking.
While running in the L position, release the accelerator pedal and check the engine braking effect.

(c) Check for abnormal noises during acceleration and deceleration.

4. R POSITION TEST

Shift into the R position and fully depress the accelerator pedal and check for slipping.

CAUTION: Before conducting this test, ensure that the test area is free from personnel and obstruction.

5. P POSITION TEST

Stop the vehicle on a gradient (more than 5°) and after shifting into the P position, release the parking brake.

Then, check to see that the parking lock pawl holds the vehicle in place.

AT

PRELIMINARY CHECK

AT0VV-08

1. CHECK FLUID LEVEL

HINT:

- Drive the vehicle so that the engine and transmission are at normal operating temperature.
  Fluid temp. : 70 – 80 °C (158 – 176 °F)
- Only use the COOL range on the dipstick as a rough reference when the fluid is replaced or the engine does not run.

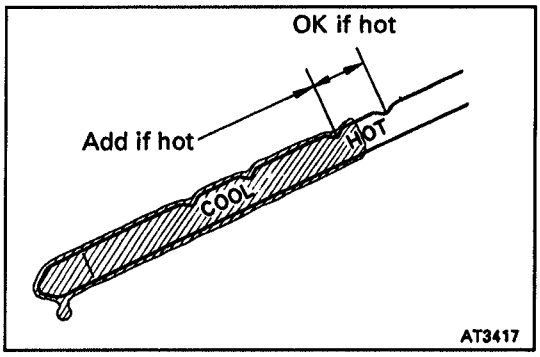

(a) Park the vehicle on a level surface and set the parking brake.

(b) With the engine idling and the brake pedal depressed, shift the shift lever into all positions from P to L position and return to P position.

(c) Pull out the dipstick and wipe it clean.

(d) Push it back fully into the pipe.

(e) Pull it out and check that the fluid level is in the HOT range.

If the level is at the low side, add fluid.

Fluid type: ATF DEXRON® II

NOTICE: Do not overfill.

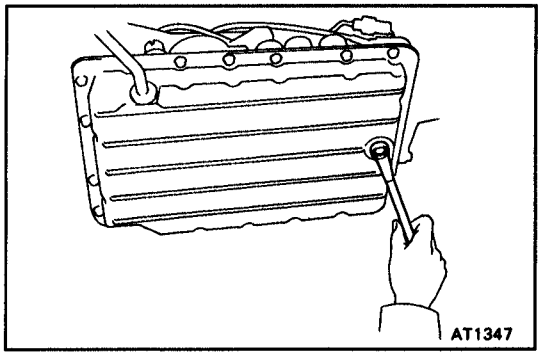

2. CHECK FLUID CONDITION

If the fluid smells burnt or is black, replace it.

3. REPLACE TRANSMISSION FLUID

(a) Remove the drain plug and drain the fluid.

(b) Reinstall the drain plug securely.

(c) With the engine OFF, add new fluid through the oil filler pipe.

Fluid type: ATF DEXRON® II

Capacity:

A340E:

Dry fill: 7.2 liters (7.6 US qts, 6.3 Imp.qts)

Drain and refill: 1.6 liters (1.7 US qts, 1.4 Imp.qts)

A340F:

Dry fill: 9.8 liters (10.5 US qts, 8.6 Imp.qts)

Drain and refill: 2.0 liters (2.1 US qts, 1.8 Imp.qts)

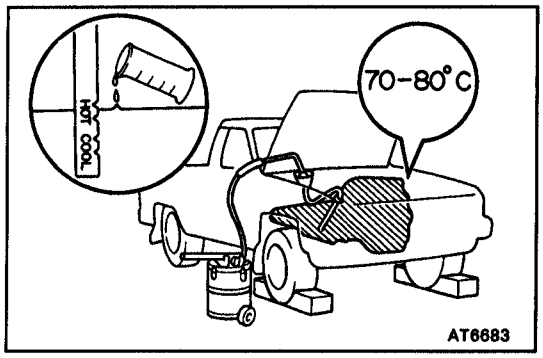

(d) Start the engine and shift the shift lever into all positions from P to L position and then shift into P position.

(e) With the engine idling, check the fluid level. Add fluid up to the COOL level on the dipstick.

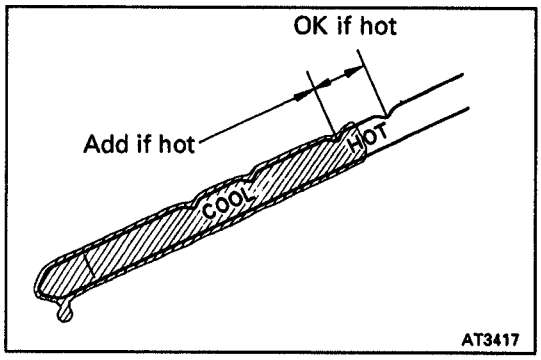

(f) Check the fluid level at the normal operating temperature, 70 – 80 °C (158 – 176 °F), and add as necessary.

NOTICE: Do not overfill.

4. CHECK FLUID LEAKS

Check for leaks in the transmission.

If there are leaks, it is necessary to repair or replace O –rings, seal packings, oil seals, plugs or other parts.

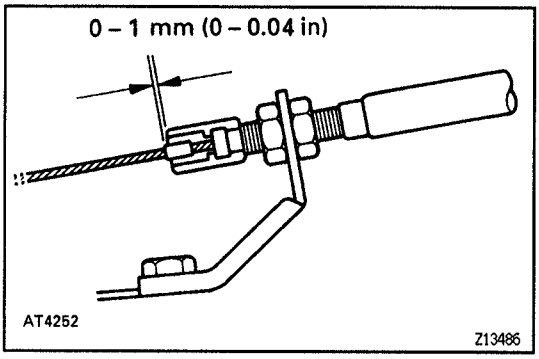

5. INSPECT AND ADJUST THROTTLE CABLE

(a) Check that the throttle valve is fully closed.

(b) Check that the inner cable is not slack.

(c) Measure the distance between the outer cable end and stopper on the cable.

Standard distance:

0 – 1 mm (0 – 0.04 in.)

If the distance is not standard, adjust the cable by the adjusting nuts.

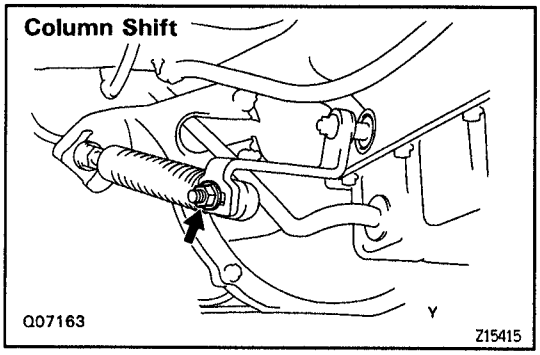

6. INSPECT AND ADJUST SHIFT LEVER POSITION

When shifting the shift lever from the N position to other positions, check that the lever can be shifted smoothly and accurately to each position and that the position indicator correctly indicates the position.

If the indicator is not aligned with the correct position, carry out the following adjustment procedures.

Column shift:

(a) Loosen the nut on the control shaft lever.

(b) Push the control shaft lever fully forward.

(c) Return the control shaft lever 2 notches to N position.

(d) Set the shift lever to N position.

(e) While holding the shift lever lightly toward the R position side, adjust the control shaft lever nut.

(f) Tighten the control shaft lever nut.

Torque: 13 N·m (130 kgf·cm, 9 ft·lbf)

(g) Start the engine and make sure that the vehicle moves forward when shifting the lever from the N to D position and reverse when shifting it to the R position.

AT

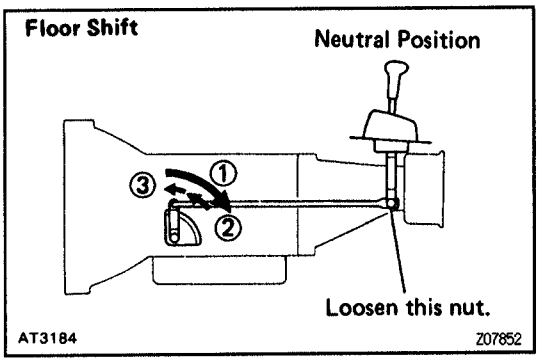

Floor shift:

(a) Remove the nut on the shift lever.
(b) Push the control shaft lever fully downward.
(c) Return the control shaft lever 2 notches to N position.
(d) Set the shift lever to N position.
(e) While holding the shift lever lightly toward the R position side, adjust the control shaft lever nut.
(f) Tighten the control shaft lever nut.
(g) Start the engine and make sure that the vehicle moves forward when shifting the lever from the N to D position and reverse when shifting it to the R position.

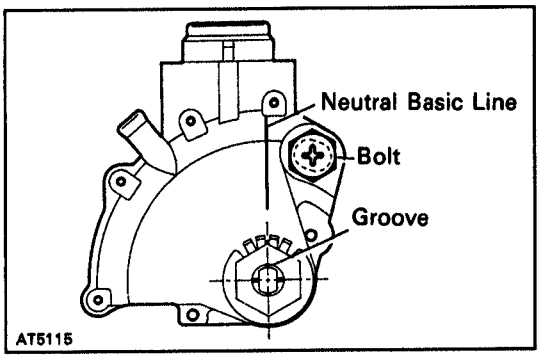

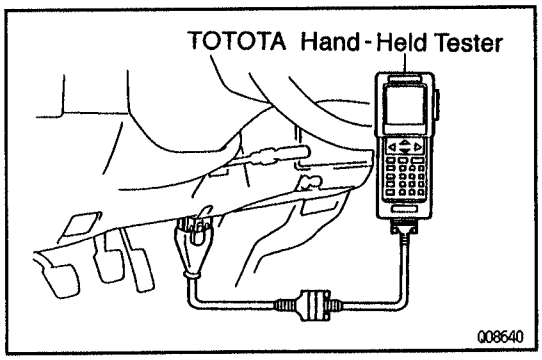

7. INSPECT AND ADJUST PARK/NEUTRAL POSITION SWITCH

Check that the engine can be started with the shift lever only in the N or P position, but not in other positions.

If not as stated above, carry out the following adjustment procedure.

(a) Loosen the park/neutral position switch bolt and set the shift lever to the N position.
(b) Align the groove and neutral basic line.
(c) Hold in position and tighten the bolt.

Torque: 13 N·m (130 kgf·cm, 9 ft·lbf)

For continuity inspect of the park/neutral position switch, see page AT–73.

8. INSPECT IDLE SPEED

Connect OBD II scan tool or TOYOTA hand–held tester to the DLC3 and inspect the idle speed.

Idle speed:

3RZ–FE: 700 ± 50 rpm
5VZ–FE: 700 ± 50 rpm
(In N position and air conditioner OFF)

AT110-01

MECHANICAL SYSTEM TESTS

STALL TEST

The object of this test is to check the overall performance of the transmission and engine by measuring the stall speeds in the D and R positions.

NOTICE:

- **Do the test at normal operating fluid temperature 50 – 80 °C (122 – 176 °F).**
- **Do not continuously run this test longer than 5 seconds.**
- **To ensure safety, conduct this test in a wide, clear, level area which provides good traction.**
- **The stall test should always be carried out in pairs. One technician should observe the conditions of wheels or wheel stoppers outside the vehicle while the other is doing the test.**

MEASURE STALL SPEED

(a) Chock the 4 wheels.

(b) Connect OBD II scan tool or TOYOTA hand-held tester to DLC3.

(c) Fully apply the parking brake.

(d) Keep your left foot pressed firmly on the brake pedal.

(e) Start the engine.

(f) Shift into the D position. Press all the way down on the accelerator pedal with your right foot. Quickly read the stall speed at this time.

Stall speed:

3RZ-FE: 1,950 ± 150 rpm

5VZ-FE: 2,150 ± 150 rpm

(g) Do the same test in R position.

Stall speed:

3RZ-FE: 1,950 ± 150 rpm

5VZ-FE: 2,150 ± 150 rpm

EVALUATION

Problem	Possible cause
(a) Stall speed low in D and R positions.	• Engine output may be insufficient • Stator one-way clutch is not operating properly HINT: If more than 600 rpm below the specified value, the torque converter clutch could be faulty.
(b) Stall speed high in D position.	• Line pressure too low • Forward clutch slipping • No.2 one-way clutch not operating properly • O/D one-way clutch not operating properly
(c) Stall speed high in R position.	• Line pressure too low • Direct clutch slipping • 1st and reverse brake slipping • O/D one-way clutch not operating properly
(d) Stall speed high in D and R positions.	• Line pressure too low • Improper fluid level • O/D one-way clutch not operating properly

TIME LAG TEST

When the shift lever is shifted while the engine is idling, there will be a certain time lapse or lag before the shock can be felt. This is used for checking the condition of the O/D direct clutch, forward clutch, direct clutch, and first and reverse brake.

NOTICE:

- **Do the test at normal operating fluid temperature 50 – 80 °C (122 – 176 °F).**
- **Be sure to allow 1 minute interval between tests.**
- **Take three measurements and take the average value.**

MEASURE TIME LAG

(a) Fully apply the parking brake.

(b) Start the engine and check idle speed.

Idle speed:

3RZ–FE and 5VZ–FE: 700 ± 50 rpm (In N position and air conditioner OFF)

(c) Shift the shift lever from N to D position. Using a stop watch, measure the time it takes from shifting the lever until the shock is felt.

Time lag: N→D Less than 1.2 seconds

In same manner, measure the time lag for N → R.

Time lag: N→R Less than 1.5 seconds

EVALUATION

If N→D or N→R time lag are longer than specified:

Problem	Possible cause
N→D time lag is longer	• Line pressure too low • Forward clutch worn • O/D one–way clutch not operating properly
N→R time lag is longer	• Line pressure too low • Direct clutch worn • 1st and reverse brake worn • O/D one–way clutch not operating properly

AT

HYDRAULIC TEST

MEASURE LINE PRESSURE

NOTICE:

- **Do the test at normal operating fluid temperature 50 – 80 °C (122 – 176 °F).**
- **The line pressure test should always be carried out in pairs. One technician should observe the conditions of wheels or wheel stoppers outside the vehicle while the other is doing the test.**
- **Be careful to prevent the oil pressure gauge hose from interfering with the exhaust pipe.**

(a) Warm up the transmission fluid.

(b) Remove the test plug on the transmission case right side and connect SST.
SST 09992–00094 (09992–00150, 09992–00270)
(See page AT–16,19,20 for the location to connect SST)

(c) Fully apply the parking brake and chock the 4 wheels.

(d) Start the engine and check idling speed.

(e) Keep your left foot pressed firmly on the brake pedal and shift into D position.

(f) Measure the line pressure when the engine is idling.

(g) Press the accelerator pedal all the way down. Quickly read the highest line pressure when engine speed reaches stall speed.

NOTICE: Release the accelerator pedal and stop test if the rear wheels begin to rotate before the engine speed reaches specified stall speed.

(h) In the same manner, do the test in R position.

SPECIFIED LINE PRESSURE

3RZ–FE:

Condition	D position kPa (kgf/cm², psi)	R position kPa (kgf/cm², psi)
Idling	363–422 (3.7–4.3, 53–61)	490–588 (5.0–6.0, 71–85)
Stall	932–1,177 (9.5–12.0, 135–171)	1,294–1,638 (13.2–16.7, 188–238)

5VZ–FE:

Condition	D position kPa (kgf/cm², psi)	R position kPa (kgf/cm², psi)
Idling	363–422 (3.7–4.3, 53–61)	608–696 (6.2–7.1, 88–101)
Stall	902–1,147 (9.2–11.7, 131–166)	1,432–1,942 (14.6–19.8, 208–282)

If the measured pressures are not up to specified values, recheck the throttle cable adjustment and retest.

EVALUATION

Problem	Possible cause
If the measured values at all positions are higher.	• Throttle cable out of adjustment • Throttle valve defective • Regulator valve defective
If the measured values at all positions are lower.	• Throttle cable out of adjustment • Throttle valve defective • Regulator valve defective • Oil pump defective • O/D direct clutch defective
If pressure is low in the D position only.	• D position circuit fluid leakage • Forward clutch defective
If pressure is low in the R position only.	• R position circuit fluid leakage • Direct clutch defective • 1st and reverse brake defective

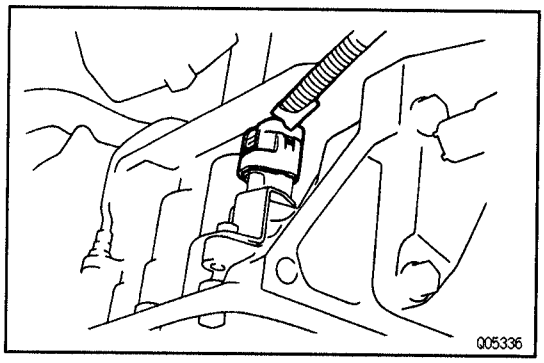

MANUAL SHIFTING TEST

AX0RT–0J

HINT: With this test, it can be determined whether the trouble is within the electrical circuit or is a mechanical problem in the transmission.

1. **DISCONNECT SOLENOID WIRE**
2. **INSPECT MANUAL DRIVING OPERATION**
   Check that the shift and gear positions correspond with the table below.

Shift Position	Gear Position
D	O/D
2	3rd
L	1st
R	Reverse
P	Pawl Lock

HINT: If the L, 2 and D position gear positions are difficult to distinguish, do the following road test.

- While driving, shift through the L, 2 and D positions. Check that the gear change corresponds to the shift position.
- If any abnormality is found in the above test, the problem is in the transmission itself.

3. **CONNECT SOLENOID WIRE**
4. **CANCEL OUT DTC (See page AT–37)**

AT

AT111-01

PARTS LOCATION

3RZ-FE (A340F)

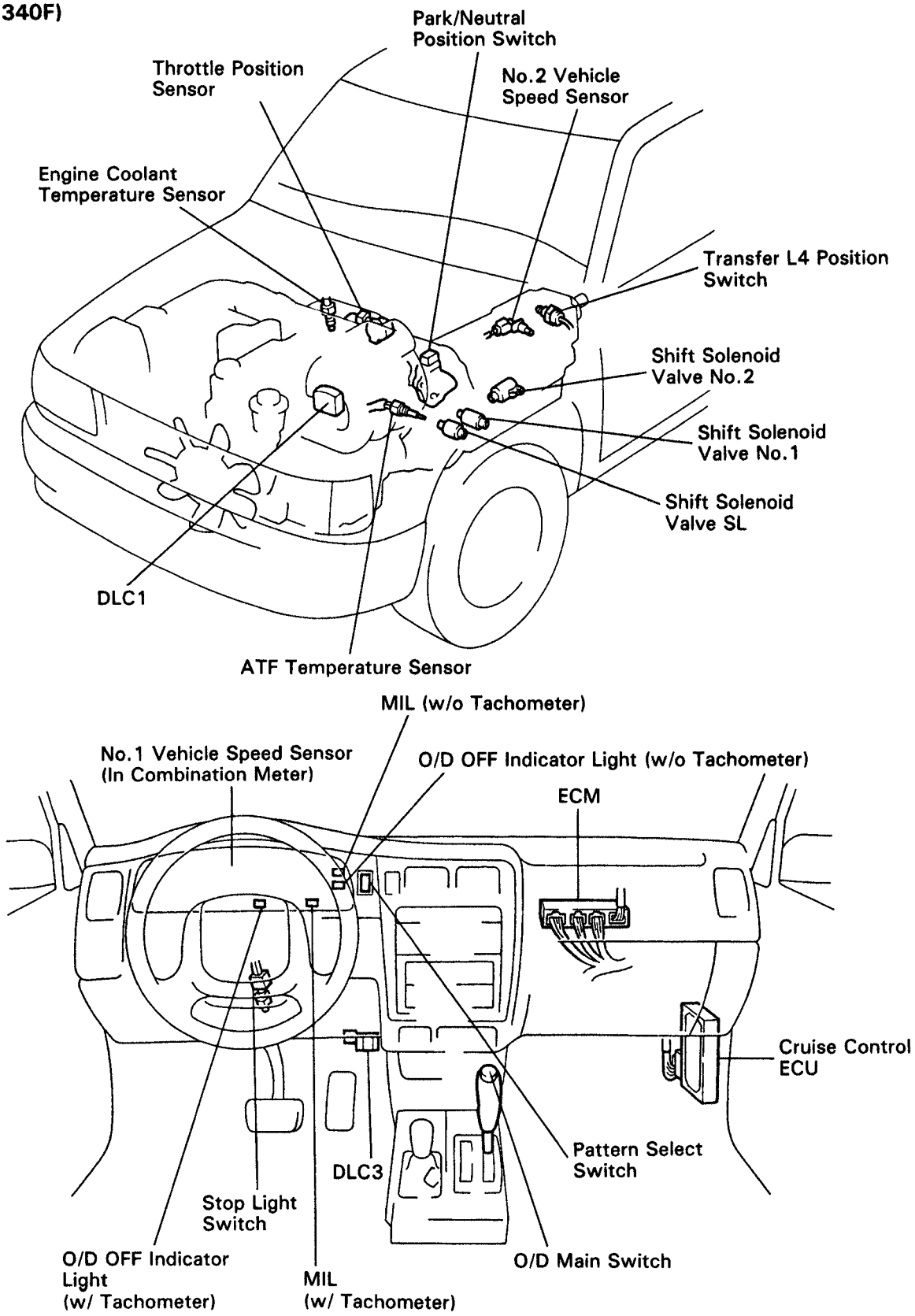

Q07336
Q08466

Z16801

AT

5VZ-FE (A340E & A340F)

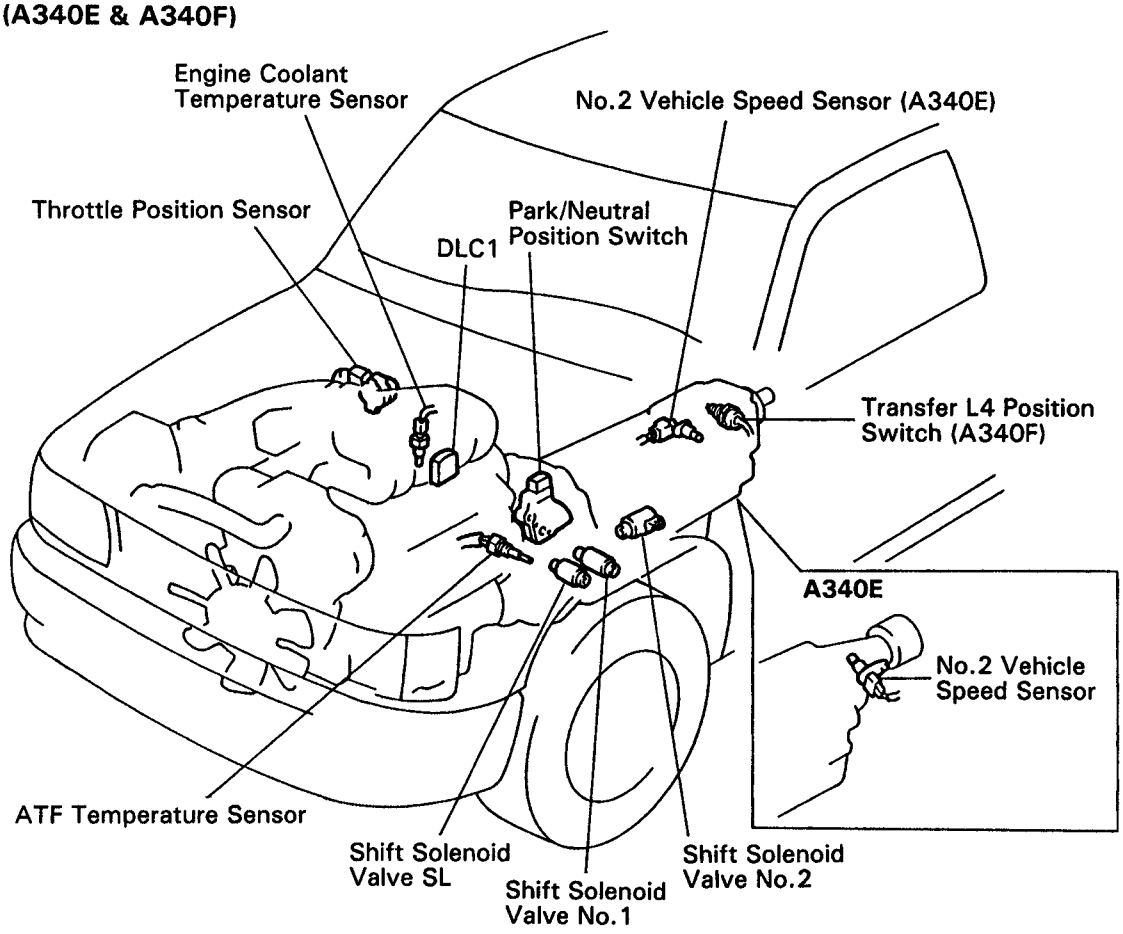

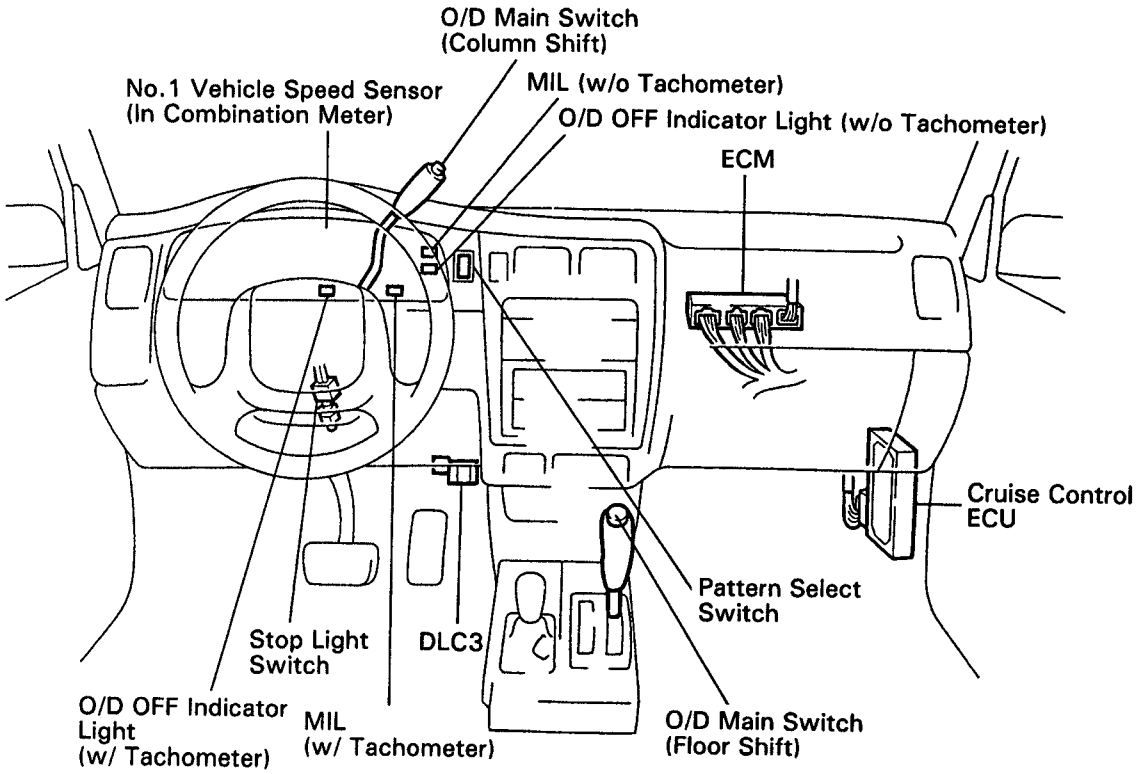

Q06724
Q08280

Z16620

AT0VW–04

STANDARD VALUE OF ECM TERMINAL

3RZ–FE:

ECM Terminals

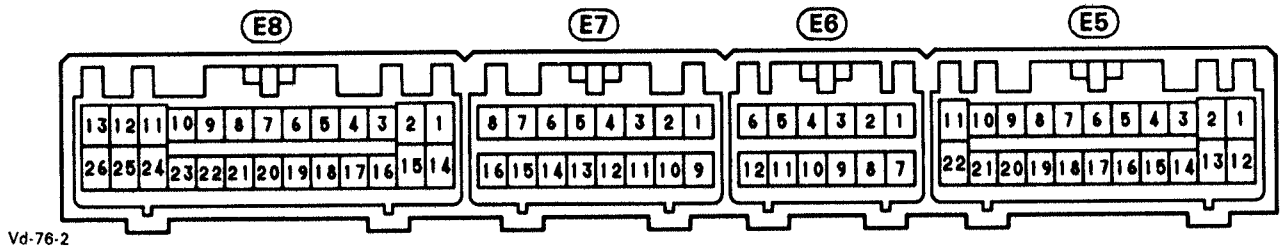

Connector,Terminal No. Symbols Wiring Color	Condition	Standard Value
E5, 8 – E8, 24 SP1 – E1 G·O – BR	1. Disconnect cruise control connector. 2. IG ON Stationary Turn one rear wheel slowly	 Below 1.5 V Pulse signal is output Below 1.5 V ↔ 4–6 V
E8, 10 – E8, 24 S1 – E1 V·Y – BR	IG OFF and disconnect ECM connector IG ON 1st or 2nd gear 3rd or O/D gear	11 – 15 Ω 9 – 14 V 9 – 14 V Below 1.5 V
E8, 9 – E8, 24 S2 – E1 LG – BR	IG OFFand disconnect ECM connector IG ON 2nd or 3rd gear 1st or O/D gear	11 – 15 Ω Below 1.5 V 9 – 14 V Below 1.5 V
E8, 8 – E8, 24 SL – E1 R·G – BR	IG OFF and disconnect ECM connector IG ON Vehicle driving under lock–up position	11 – 15 Ω Below 1.5 V 9 – 14 V
E6, 10 – E6, 4 $SP2^+$ – $SP2^-$ Y·R – W·R	IG OFF and disconnect ECM connector Engine is running	560 – 680 Ω Pulse signal is output Below 1.5 V ↔ 4–6 V
E5, 18 – E8, 24 OD1 – E1 L – BR	IG ON	9 – 14 V
E5, 17 – E8, 24 OD2 – E1 L·O – BR	O/D main switch ON O/D main switch OFF	9 – 14 V Below 1.5 V
E8, 21 – E7,9 OIL – E2 Y·R – BR·B	ATF temperature: 115°C (239°F) or more	Below 1.5 V
E5, 16 – E8, 24 L – E1 V·W – BR	IG ON Shift lever L position Shift lever other than L position	9 – 14 V Below 1.5 V

AT

E5, 15 – E8, 24 2 – E1 P – BR	IG ON Shift lever 2 position Shift lever other than 2 position	 9 – 14 V Below 1.5 V
E5, 17 – E8, 24 R – E1 R·B – BR	IG ON Shint lever R position Shift lever other than R position	 9 – 14 V Below 1.5 V
E5, 22 – E8, 24 NSW – E1 B – BR	IG ON Shift lever P or N position Shift lever other than P and N position	 9 – 14 V Below 1.5 V
E5, 21 – E8, 24 B/K – E1 G·W – BR	IG ON Brake pedal is depressed Brake pedal is released	 7.5 – 14 V Below 1.5 V
E7, 4 – E7, 9 THW – E2 G·R – BR·B	IG ON Engine coolant temperature 80 °C (176 °F)	 Below 1.5 V
E7, 11 – E7, 9 IDL – E2 Y·L – BR·B	IG ON Accel. pedal is released Accel. pedal is depressed	 Below 1.5 V 9 – 14 V
E7, 10 – E7, 9 VTA – E2 Y – BR·B	IG ON Accel. pedal is released Accel. pedal is depressed	 Below 0.3 – 0.8 V 3.2 – 4.9 V
E8, 21 – E8, 24 L4 – E1 G – BR	IG ON Transfer shift position H2 or H4 Transfer shift position L4	 9 –14 V Below 1.5 V
E5, 14 – E8, 24 PWR – E1 G·O – BR	IG ON NORM Pattern PWR Pattern	 Below 1.5 V 9 – 14 V

AT

5VZ–FE:

ECM Terminals

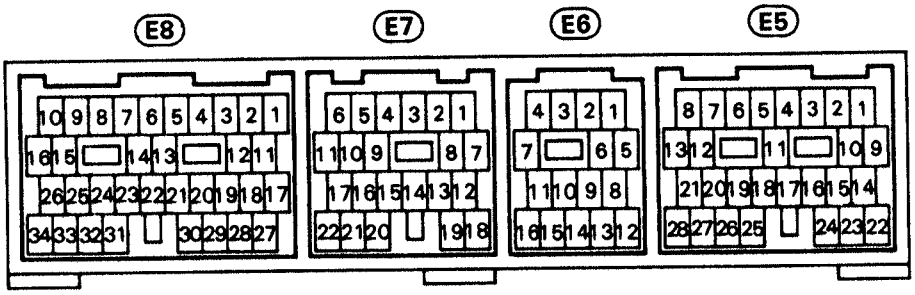

F16810

Z15398

Connector,Terminal No. Symbols Wiring Color	Condition	Standard Value
E5, 12 – E6, 16 SP1 – E1 G·O – BR	1. Disconnect cruise control connector. 2. IG ON Stationary Turn one rear wheel slowly	 Below 1.5 V Pulse signal is output Below 1.5 V ↔ 4–6 V
E8, 11 – E6, 16 S1 – E1 V·Y – BR	IG OFF and disconnect ECM connector IG ON 1st or 2nd gear 3rd or O/D gear	11 – 15 Ω 9 – 14 V 9 – 14 V Below 1.5 V
E8, 17 – E6, 16 S2 – E1 LG – BR	IG OFF and disconnect ECM connector IG ON 2nd or 3rd gear 1st or O/D gear	11 – 15 Ω Below 1.5 V 9 – 14 V Below 1.5 V
E8, 27 – E6, 16 SL – E1 R·G – BR	IG OFFand disconnect ECM connector IG ON Vehicle driving under lock–up position	11 – 15 Ω Below 1.5 V 9 – 14 V
E7, 9 – E7, 4 $SP2^+$ – $SP2^-$ Y·R – W·R	IG OFFand disconnect ECM connector IG ON Turn one rear wheel slowly	560 – 680 Ω Pulse signal is output Below 1.5 V ↔ 4 – 6 V
E5, 7 – E6, 16 OD1 – E1 L – BR	IG ON	9 – 14 V
E5, 6 – E6, 16 OD2 – E1 L·O – BR	O/D main switch ON O/D main switch OFF	9 – 14 V Below 1.5 V
E7, 12 – E7,22 OIL – E2 Y·R – BR·B	ATF temperature: 115°C (239°F) or more	Below 1.5 V
E5, 3 – E6, 16 L – E1 V·W – BR	IG ON Shift lever L position Shift lever other than L position	9 – 14 V Below 1.5 V

AT

E5, 1 – E6, 16	IG ON	
R – E1	Shint lever R position	9 – 14 V
R·B – BR	Shift lever other than R position	Below 1.5 V
E5, 2 – E6, 16	IG ON	
2 – E1E1	Shift lever 2 position	9 – 14 V
P – BR	Shift lever other than 2 position	Below 1.5 V
E8, 14 – E7, 22	IG ON	
NSW – E1	Shift lever P or N position	9 – 14 V
B – BR	Shift lever other than P and N position	Below 1.5 V
E5, 25 – E5, 16	IG ON	
B/K – E1	Brake pedal is depressed	7.5 – 14 V
G·W – BR	Brake pedal is released	Below 1.5 V
E7, 20 – E7, 22	IG ON	
THW – E2	Engine coolant temperature 80 °C (176 °F)	Below 1.5 V
G·R – BR·Y		
E8, 32 – E7, 22	IG ON	
IDL – E2	Accel. pedal is released	Below 1.5 V
Y·L – BR·Y	Accel. pedal is depressed	9 – 14 V
E7, 7 – E7, 22	IG ON	
VTA – E2	Accel. pedal is released	Below 0.3 – 0.8 V
G·O – BR·Y	Accel. pedal is depressed	3.2 – 4.9 V
* E8, 29 – E6, 16	IG ON	
L4 – E1	Transfer shift position H2 or H4	4 – 6 V
G – BR	Transfer shift position L4	Below 1.5 V
E5, 10 – E6, 16	IG ON	
PWR – E1	NORM Pattern	Below 1.5 V
G·O – BR	PWR Pattern	9 – 14 V

*: 4WD only

AT

AT0TD–07

MATRIX CHART OF PROBLEM SYMPTOMS

If a normal code is displayed during the DTC check, but the trouble still occurs, check the circuits for each symptom in the order given in the charts on the following pages and proceed to the page given for troubleshooting.

The Matrix Chart is divided into 3 chapters.

Chapter 1: Electronic Circuit Matrix Chart

Chapter 2: On–Vehicle Repair Matrix Chart

Chapter 3: Off–Vehicle Repair Matrix Chart

When troubleshooting, check Chapter 1 first. If instructions are given in Chapter 1 to proceed to Chapter 2 or 3, proceed as instructed.

1. If the instruction "Proceed to next circuit inspection shown on matrix chart" is given in the flow chart for each circuit, proceed to the circuit with the next highest number in the table to continue the check.
2. If the trouble still occurs even though there are no abnormalities in any of the other circuits, then check or replace the ECM.

Chapter 1. Electronic Circuit

See Page / Suspect Area / Symptom		3RZ-FE: EG-276 5VZ-FE: EG-287	AT-71	AT-64	AT-68	3RZ-FE: EG-219 5VZ-FE: EG-232	AT-73	AT-83
		No.1 vehicle speed sensor circuit	No.2 vehicle speed sensor circuit	Shift solenoid valve No.1, No.2 circuit	Shift solenoid valve SL circuit	Throttle position sensor circuit	Park/neutral position switch circuit	Stop light switch circuit
Vehicle does not move in any forward position and reverse position								
Vehicle does not move in a particular position or positions								
No up-shift	1st → 2nd	3	4	1		2	6	
	2nd → 3rd	3	4	1		2	6	
	3rd → O/D	3	4	2		5	6	
No down-shift	O/D → 3rd	3	4	1		2		
	3rd → 2nd	3	4	1		2		
	2nd → 1st	3	4	1		2		
Lock-up does not engage		3	4		1	2	6	5
Lock-up does not disengage		3	4		1	2		5
Shift point too high or too low		3	4			1		
Up-shifts to 2nd while in L position Up-shifts to 3rd while in 2 position							1	
Up-shifts to O/D from 3rd while O/D main switch is OFF								
Up-shifts to O/D from 3rd while engine is cold								
Harsh engagement	N → D				1	3	4	
	Lock-up	3	4		1	2		
	Any driving position	4	5		1	3		
Slip or Shudder	Forward and reverse							
	A particular position							
No engine braking								
Poor acceleration		2	3	4	5	1		
No kick-down		2		3		1		
No pattern select								
Large shift shock or engine stalls when starting off or stopping					1			2

AT

V06558

ATF temperature sensor circuit	Pattern select switch circuit	O/D main switch & O/D OFF indicator light circuit	O/D cancel signal circuit	Engine coolant temperature sensor circuit	ECM	On-vehicle repair matrix chart	OFF-vehicle repair matrix chart
AT-62	AT-78	AT-78	AT-76	3RZ-FE : EG-215 5VZ-FE : EG-225	IN-29	AX-58	AT-60
						1	2
						1	2
					8	5	7
					8	5	7
		1	7	8	11	9	10
					6	5	
					6	5	
					7	5	6
				7	10	8	9
					8	6	7
	2				5		
					2		
					1		
				1	4	2	3
2					7	5	6
					7	5	6
2					8	6	7
						1	2
						1	2
						1	2
						6	7
					5		4
	1				2		
					4		3

AT

V07132

Chapter 2. On–Vehicle Repair

★ : A340E, A340F, A340H AUTOMATIC TRANSMISSION Repair Manual (Pub.No.RM391U) or A340F, A343F AUTOMATIC TRANSMISSION Repair Manual (Pub.No.RM479U)

See Page / Suspect Area / Symptom		AT-43 Throttle cable	AT-43 Transmission control rod	★ Oil strainer	★ Parking lock pawl	★ Manual valve	★ Throttle valve	★ 1-2 shift valve	★ 2-3 shift valve
Vehicle does not move in any forward position and reverse position		1	2		5	3			
Vehicle does not move in R position									
Vehicle does not move in a particular positions or positions (except R position)									
No up-shift	1st → 2nd							1	
	2nd → 3rd								1
	3rd → O/D								
No down-shift	O/D → 3rd								
	3rd → 2nd								1
	2nd → 1st							1	
Lock-up does not engage or Lock-up does not disengage									
Harsh engagement	N → D								
	Lock-up								
	N → R								
	N → L								
	1st → 2nd (D position)								
	1st → 2nd (2 position)								
	2nd → 3rd → O/D 1st → 2nd → 3rd → O/D						1		
	2nd → 3rd								
	3rd → O/D								
	O/D → 3rd								
Slip or Shudder	Forward and Reverse	1	2	3					
	Particular position	1	2						
No engine braking	1st								
	2nd								
No kick-down								1	2

AT

V06513

★	★	★	★	★	★	★	★	★	★	★	★	AT-60
3-4 shift valve	Primary regulator valve	Lock-up relay valve	Accumulator control valve	Cut-back valve	C_2 accumulator	Low coast modulator valve	B_2 accumulator	2nd coast modulator valve	B_0 accumulator	C_0 accumulator	Pressure relief valve	Off-vehicle repair matrix chart
	4											6
												1
												1
												2
												2
1												2
1												
												2
		1										2
			1									2
		1										2
			1		2							3
						1						
			1				2					
			1				2					
				1								
			2									
			1		2							3
			1						2			3
			1							2		3
											4	5
												3
						1						2
								1				2

AT

Chapter 3. Off–Vehicle Repair

★ : A340E, A340F, A340H AUTOMATIC TRANSMISSION Repair Manual (Pub.No.RM391U) or A340F, A343F AUTOMATIC TRANSMISSION Repair Manual (Pub.No.RM479U)

See Page / Suspect Area / Symptom		★ O/D one-way clutch (Fo)	★ O/D brake (Bo)	★ O/D direct clutch (Co)	★ O/D planetary gear unit	AT-17, 25 Torque converter clutch	★ 1st and reverse brake (B3)
Vehicle does not move in any forward position and reverse position		1	2	3	4	5	
Vehicle does not move in R position				5			4
Vehicle does not move in	D, 2 and L positions						
	D and 2 positions						
	2 position						1
	L position						
No up-shift	1st → 2nd						
	2nd → 3rd						
	3rd → O/D		1				
No down-shift	2nd → 1st						
Lock-up does not engage or Lock-up does not disengage						1	
Harsh engagement	N → D						
	N → R						2
	2nd → 3rd						
	3rd → O/D		2	1	3		
	O/D → 3rd		1				
	Lock-up					1	
Slip or Shudder	Forward and Reverse (After warm-up)	2		3		1	
	Forward and Reverse (Just after engine starts)					1	
	R position						2
	1st						
	2nd						
	3rd						
	O/D		1				
No engine braking	1st ~ 3rd			1			
	1st						1
	2nd						
Poor acceleration	All positions					1	
	O/D			1	2		
	Other than O/D		1				
	Other than 2nd						
	1st and 2nd						
	L and R positions						1
	R position						
Engine stalls when starting off or stopping						1	

V06266

★	★	★	★	★	★	★
2nd coast brake (B_1)	Direct clutch (C_2)	Front and rear planetary gear unit	Forward clutch (C_1)	No. 2 one-way clutch (F_2)	2nd brake (B_2)	No. 1 one-way clutch (F_1)
1	3	2				
			1			
				1		
2	3				1	
					1	2
	1					
1					2	
			1			
	1					
1						
	1					
			1	2		
2					1	3
	1					
1						
1					2	
	1					
			1			

AT

V06267

CIRCUIT INSPECTION

DTC	P0500	Vehicle Speed Sensor Malfunction (No.1 Vehicle Speed Sensor)

See page 3RZ-FE EG-276, 5VZ-FE EG-286.

DTC	P0710	Transmission Fluid Temperature Sensor Circuit Malfunction (ATF Temperature Sensor)

CIRCUIT DESCRIPTION

The ATF temperature sensor converts fluid temperature into a resistance value which is input into the ECM.

DTC No.	DTC Detecting Condition	Trouble Area
P0710	Either a) or b) is detected for 0.5 sec. or more: a) Temperature sensor resistance less than 79 kΩ b) After the engine has been operating for 15 minutes or more, the resistance at the temperature sensor is more than 156 kΩ	• Open or short in ATF temperature sensor circuit • ATF temperature sensor • ECM

WIRING DIAGRAM

AT

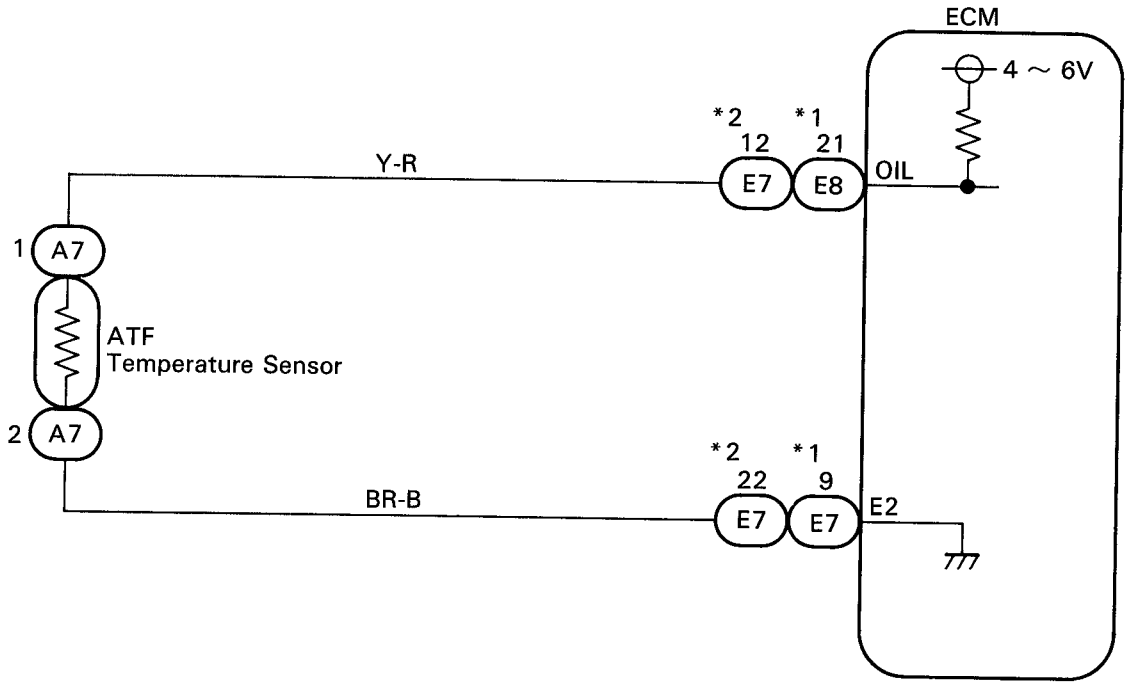

*1: 3RZ-FE
*2: 5VZ-FE

Q07378

INSPECTION PROCEDURE

1 Check ATF Temperature Sensor.

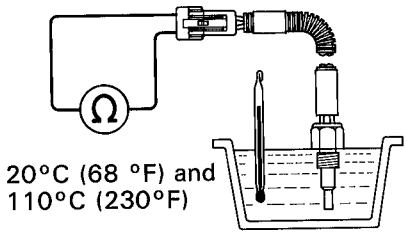

P Remove ATF temperature sensor.

C Measure resistance between terminals of ATF temperature sensor at 20°C (68°F) and 110°C (230°F).

OK **Resistance:**
20°C (68°F): Approx. 4,290 Ω
110°C (230°F): Approx. 690 Ω

Q07637

OK

NG → **Replace ATF temperature sensor.**

2 Check harness and cennector between ATF temperature sensor and ECM. (See page IN-24).

OK

NG → **Repair or replace harness or connector.**

Check and replace ECM.

AT

DTC P0750 P0755 Shift Solenoid A/B Malfunction (Shift Solenoid Valve No.1/No.2)

SYSTEM DESCRIPTION

The ECM uses signals from the vehicle speed sensor to detect the actual gear position (1st, 2nd, 3rd or O/D gear). The ECM then compares the actual gear with the shift schedule in the ECM memory to detect mechanical trouble of the shift solenoid valves and valve body.

DTC No.	DTC Detecting Condition	Trouble Area
P0750 P0755	During normal driving, the gear required by the ECM does not match the actual gear. (2 trip detection logic)	• Shift solenoid valve No.1/No.2 is stuck open or closed. • Valve body is blocked up or stuck.

Check the shift solenoid valve No.1 when DTC P0750 is output and check shift solenoid valve No.2 when DTC P0755 is output.

INSPECTION PROCEDURE

1 **Check shift solenoid valve No.1 or No.2 operation.**

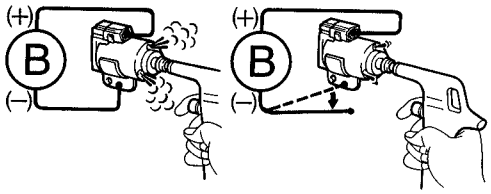

Q07640

P
1. Remove the oil pan.
2. Remove the shift solenoid valve No.1 or No.2.

C
1. Applying 490 kPa (5 kgf/cm², 71 psi) of compressed air, check that the shift solenoid valves do not leak air.
2. When battery positive voltage is supplied to the shift solenoid valves, check they open.

OK

NG → **Replace shift solenoid valve No.1 or No.2.**

2 **Check valve body (See page AT-58).**

OK

NG → **Repair or replace valve body.**

AT

Repair the transmission (See page AT-14, 19).

DTC P0753 P0758 Shift Solenoid A/B Electrical Malfunction (Shift Solenoid Valve No.1/No.2)

CIRCUIT DESCRIPTION

Shifting from 1st to O/D is done in combination with ON and OFF of the shift solenoid valves No.1 and No.2 controlled by ECM. If an open or short circuit occurs in either of the shift solenoid valves, the ECM controls the remaining normal shift solenoid valve to allow the vehicle to be operated safely (Fail safe function).

Fail Safe Function

If either of the shift solenoid valve circuits develops an open or a short, the ECM turns the other shift solenoid ON and OFF to shift to the gear positions shown in the table below. The ECM also turns the shift solenoid valve SL OFF at the same time. If both solenoids are malfunction, hydraulic control cannot be done electronically so it must be done manually.

Manual shifting as shown in the following table must be done. (In the case of a short circuit, the ECM stops sending current to the short circuited solenoid).

Position	NORMAL			SHIFT SOLENOID VALVE NO.1 MALFUNCTIONING			SHIFT SOLENOID VALVE NO.2 MALFUNCTIONING			BOTH SOLENOIDS MALFUNCTIONING
	Solenoid valve		Gear	Solenoid valve		Gear	Solenoid valve		Gear	Gear when shift selector is manually operated
	No.1	No.2		No.1	No.2		No.1	No.2		
D	ON	OFF	1st	X	ON	3rd	ON	X	1st	O/D
	ON	ON	2nd	X	ON	3rd	OFF	X	O/D	O/D
	OFF	ON	3rd	X	ON	3rd	OFF	X	O/D	O/D
	OFF	OFF	O/D	X	OFF	O/D	OFF	X	O/D	O/D
2	ON	OFF	1st	X	ON	3rd	ON	X	1st	3rd
	ON	ON	2nd	X	ON	3rd	OFF	X	3rd	3rd
	OFF	ON	3rd	X	ON	3rd	OFF	X	3rd	3rd
L	ON	OFF	1st	X	OFF	1st	ON	X	1st	1st
	ON	ON	2nd	X	ON	2nd	ON	X	1st	1st

X: Malfunctions

Check the shift solenoid valve No. 1 when DTC P0753 is output and check the shift solenoid valve No. 2 when DTC P0758 is output.

DTC No.	DTC Detecting Condition	Trouble Area
P0753 P0758	The ECM checks for an open or short circuit in the shift solenoid valves No.1 and No.2 circuit when it changes. The ECM records DTC P0753 or P0758 if condition a) or b) is detected once, but it does not light up MIL. After ECM detects condition a) or b) continuously 8 times or more in one-trip, it causes the MIL light up until condition a) or b) disappears. After that, if the ECM detects condition a) or b) once, it starts lighting up MIL again. a) When the solenoid is energized, the solenoid resistance is 8 Ω or less and is counted b) When the solenoid is not energized, the solenoid resistance is 100 kΩ or more and is counted	• Solenoid valve • Open or short in shift solenoid valve No.1 or No.2 circuit • ECM

AT

WIRING DIAGRAM

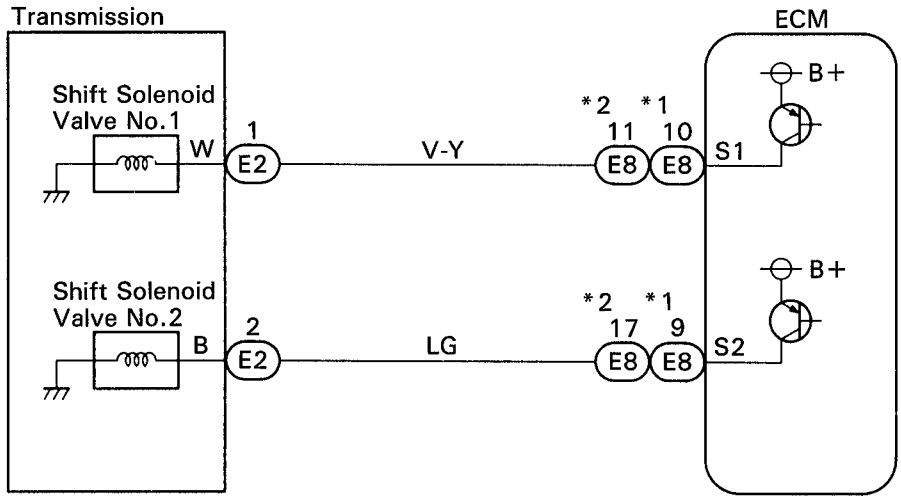

*1: 3RZ-FE
*2: 5VZ-FE

Q07400

INSPECTION PROCEDURE

1 **Measure resistance between terminal S1 or S2 of ECM and body ground.**

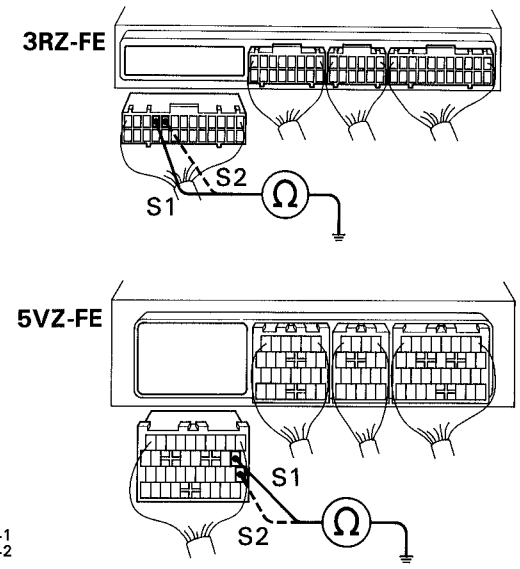

Q07641
Q07642

P Disconnect the connector from the ECM.

C Measure resistance between terminal S1 or S2 of ECM and body ground.

OK **Resistance: 11 ~ 15 Ω**

NG

OK → **Check and replace ECM.**

AT

2 **Check harness and connector between ECM and automatic transmission solenoid connector.**

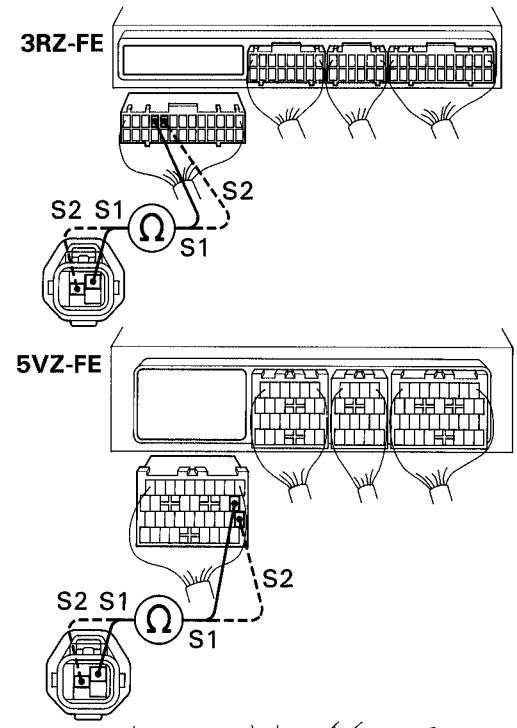

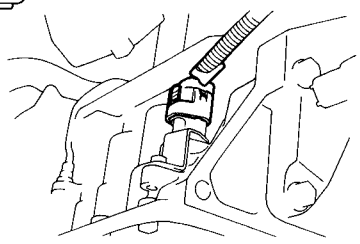

Q07643
Q07644
Q05336

P Disconnect the solenoid connector on the automatic transmission.

C Check harness and connector between terminals S1 or S2 of ECM and S1 or S2 terminals of solenoid connector.

OK **There is no open and no short circuit.**

OK

NG → **Repair or replace harness or connector.**

3 Check shift solenoid valve No.1 or No.2.

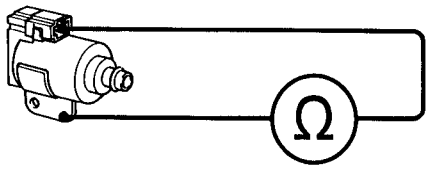

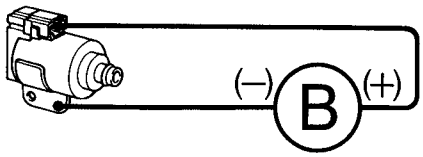

Q07645
Q07646

P
1. Jack up the vehicle.
2. Remove oil pan.
3. Disconnect solenoid connector.
4. Remove shift solenoid valve No.1 or No.2.

C Measure resistance between solenoid connector and solenoid body.

OK **Resistance: 11 ~ 15 Ω**

C Connect positive ⊕ lead to terminal of solenoid connector, negative ⊖ lead to solenoid body.

OK **The solenoid makes an operating noise.**

OK → **Repair or replace solenoid wire.**

NG → **Replace shift solenoid valve.**

DTC P0770 Shift Solenoid E Malfunction (Shift Solenoid Valve SL)

AT

SYSTEM DESCRIPTION

The ECM uses the signals from the throttle position sensor, air-flow meter and crankshaft position sensor to monitor the engagement condition of the lock-up clutch.

Then the ECM compares the engagement condition of the lock-up clutch with the lock-up schedule in the ECM memory to detect mechanical trouble of the shift solenoid valve SL, valve body and torque converter clutch.

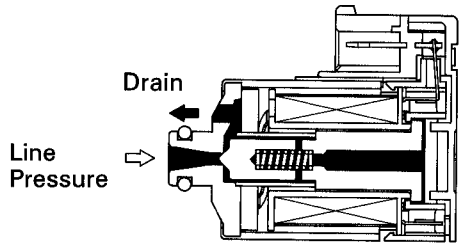

Q06995

DTC No.	DTC Detecting Condition	Trouble Area
P0770	Lock-up does not occur when driving in the lock-up range (normal driving at 80 km/h [50 mph], or lock-up remains ON in the lock-up OFF range. (2 trip detection logic)	• Shift solenoid valve SL is stuck open or closed. • Valve body blocked up or stuck. • Lock-up clutch

INSPECTION PROCEDURE

1 **Check shift solenoid valve SL operation.**

P Remove shift solenoid valve SL from valve body.

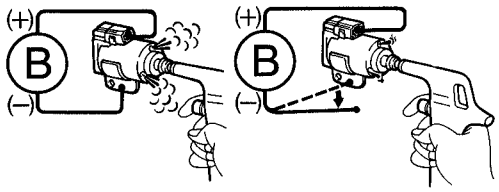

Q07640

C
1. Applying 490 kPa (5 kgf/cm², 71 psi) of compressed air, check that the solenoid valve does not leak air.
2. When battery positive voltage is supplied to the shift solenoid valve, check it opens.

OK → **2** Check valve body (See page AT-76).

NG → **Replace shift solenoid valve SL.**

OK → **Replace torque converter clutch (See pages AT-18, 25).**

NG → **Repair or replace valve body.**

AT

DTC P0773 Shift Solenoid E Electrical Malfunction (Shift Solenoid Valve SL)

CIRCUIT DESCRIPTION

The shift solenoid valve SL is turned ON and OFF by signals from the ECM to control the hydraulic pressure acting on the lock-up relay valve, which then controls operation of the lock-up clutch.

Fail safe Function
If the ECM detects a malfunction, it turns the shift solenoid valve SL OFF.

DTC No.	DTC Detecting Condition	Trouble Area
P0773	Either a) or b) are detected for 1 time. (2 trip detection logic) a) Solenoid resistance is 8 Ω or less short circuit when solenoid is energized. b) Solenoid resistance is 100 kΩ or more open circuit when solenoid is not energized.	• Open or short in shift solenoid valve SL circuit. • Shift solenoid valve SL • ECM

WIRING DIAGRAM

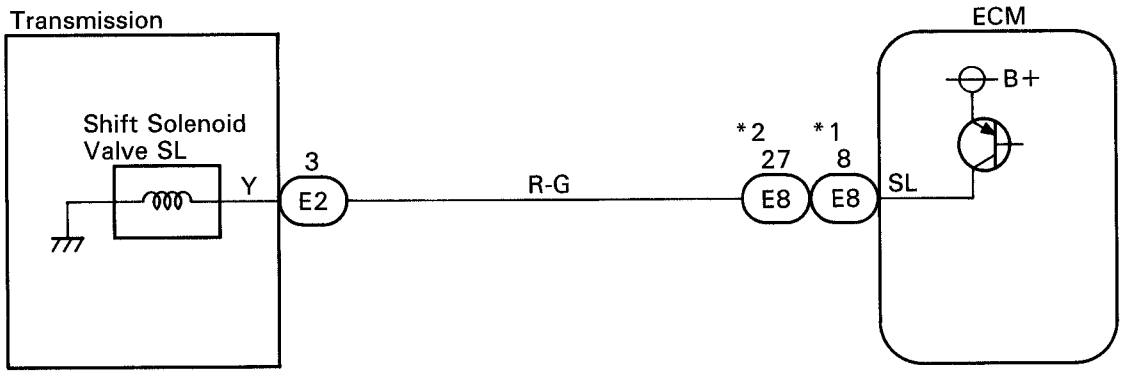

*1: 3RZ-FE
*2: 5VZ-FE

Q07379

INSPECTION PROCEDURE

AT

1 **Measure resistance between terminal SL of ECM and body ground.**

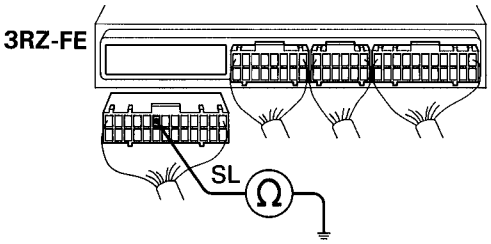

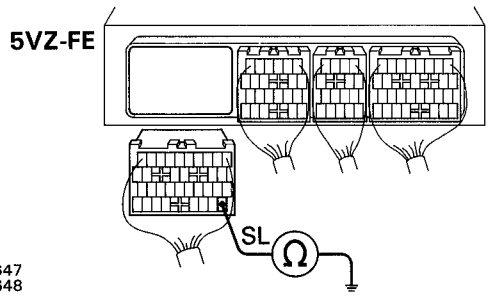

Q07647
Q07648

P Disconnect the connector from ECM.

C Measure resistance between terminal SL of ECM and body ground.

OK **Resistance: 11 ~ 15 Ω**

NG

OK → **Check and replace ECM.**

2 Check harness and connector between ECM and automatic transmission solenoid connector.

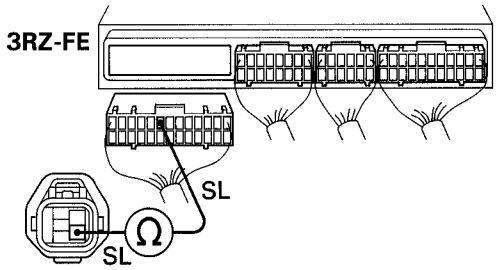

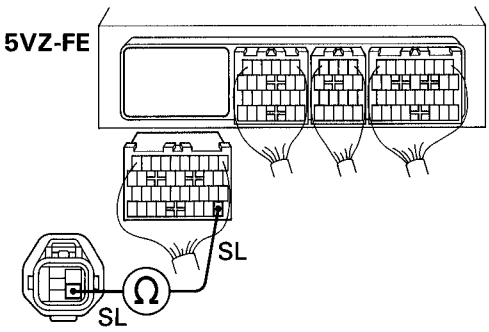

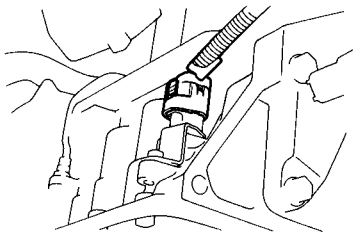

Q07649
Q07650
Q05336

P Disconnect the solenoid connector from transmission.

C Check harness between terminal SL of ECM and terminal SL of automatic transmission solenoid connector.

OK **There is no open or short circuit.**

OK

NG **Repair or replace harness or connector between ECM and automatic transmission solenoid connector.**

3 Check shift solenoid valve SL.

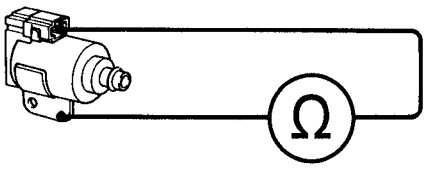

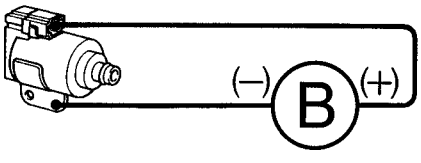

Q07645
Q07646

P
1. Jack-up the vehicle.
2. Remove oil pan.
3. Disconnect shift solenoid valve SL connector.
4. Remove shift solenoid valve SL.

C Measure resistance between shift solenoid valve SL connector terminal and solenoid body.

OK **Resistance: 11 ~ 15 Ω**

C Connect positive ⊕ lead to terminal of solenoid connector, negative ⊖ lead to solenoid body.

OK **The shift solenoid valve SL makes operation noise.**

OK

NG **Replace shift solenoid valve SL.**

Check and replace or repair the solenoid wire.

CIRCUIT INSPECTION

DTC	P1700	Speed Sensor No.2 (No.2 Vehicle Speed Sensor) Circuit Malfunction

CIRCUIT DESCRIPTION

The No.2 vehicle speed sensor detects the rotation speed of the transmission output shaft and sends signals to the ECM. The ECM determines the vehicle speed based on these signals. An AC voltage is generated in the No.2 vehicle speed sensor coil as the rotor mounted on the output shaft rotates, and this voltage is sent to the ECM.

The gear shift point and lock-up timing are controlled by the ECM based on the signals from this vehicle speed sensor and the throttle position sensor signal.

If the No.2 vehicle speed sensor malfunctions, the ECM uses input signals from the No.1 vehicle speed sensor as a back-up signal.

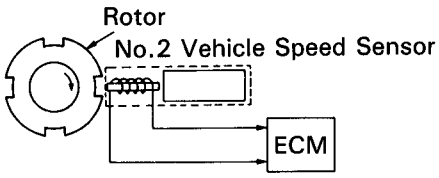

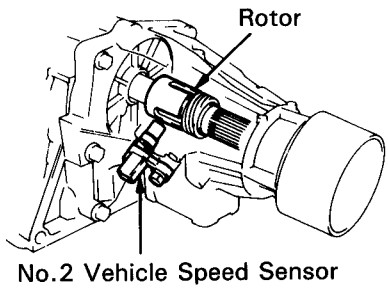

Q04812 Q04813

DTC No.	DTC Detecting Condition	Trouble Area
P1700	All conditions below are detected 500 times or more continuously. (2 trip detection logic) a) No signal from No.1 vehicle speed sensor is input to ECM while 4 puleses of No.2 vehicle speed sensor singnal is sent. b) Vehicle speed: 9 km/h (5.6 mph) or more for at least 4 secs. c) Park/neutral position switch: OFF (Other than P or N position) d) T/R: Other than N position (A340F only).	• No.2 vehicle speed sensor • Open or short in No.2 vehicle speed sensor circuit • ECM

Reference

- Wave form between terminals SP2+ and SP2− when vehicle speed is approx. 60 km/h (37 mph).

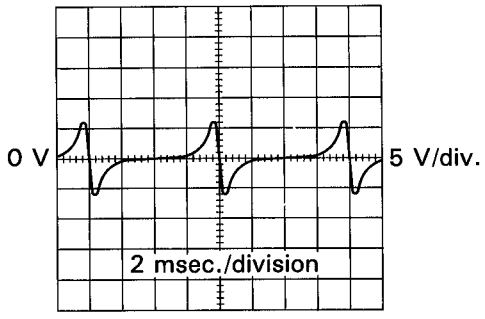

AT8761

WIRING DIAGRAM

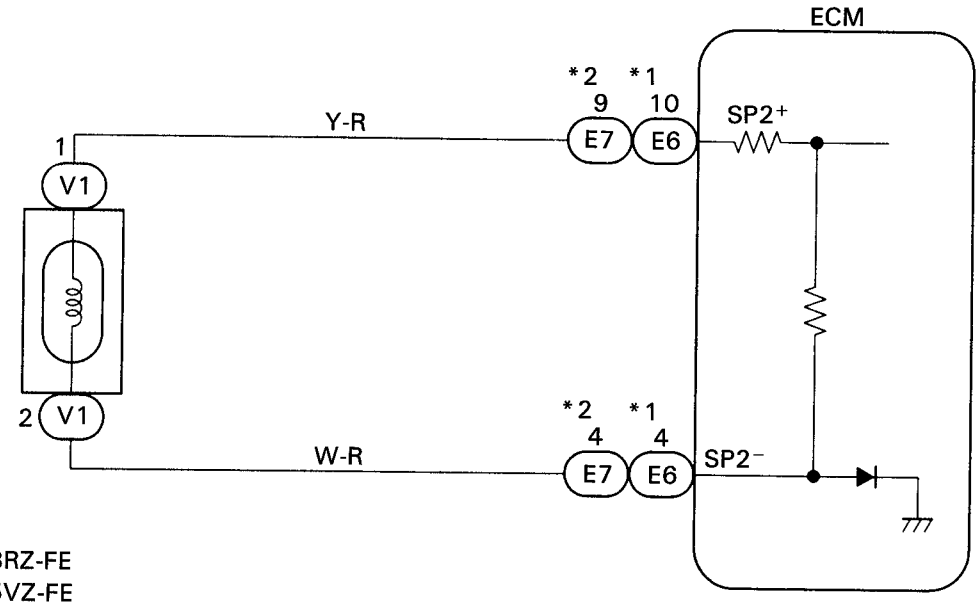

*1: 3RZ-FE
*2: 5VZ-FE

Q07396

INSPECTION PROCEDURE

1 **Check vehicle speed value or continuity between terminals SP2+ and SP2− of ECM.**

AT

When using OBD II scan tool or TOYOTA hand-held tester:

P (1) Remove the DLC3 cover.
(2) Connect the OBD II scan tool or TOYOTA hand-held tester to the DLC3.
(3) Start the engine and OBD II scan tool or TOYOTA hand-held tester main switch ON.

C Drive the vehicle and read vehicle speed value.

OK **Vehicle speed matches tester speed value.**

When not using OBD II scan tool or TOYOTA hand-held tester:

P Disconnect connector from ECM.

C Check resistance between terminals SP2+ and SP2− of ECM.

OK **Resistance: 560 ~ 680 Ω**

3RZ-FE

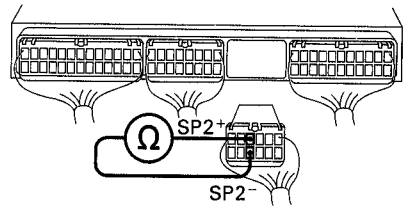

5VZ-FE

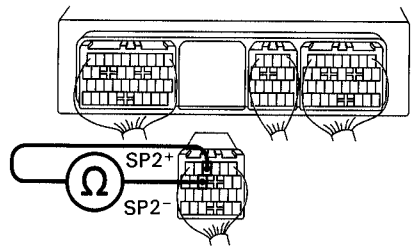

Q08458
Q08457

NG

OK → **Check and replace ECM.**

2	Check No.2 vehicle speed sensor.

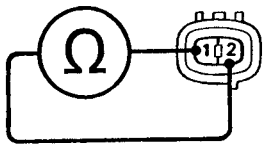

A340E

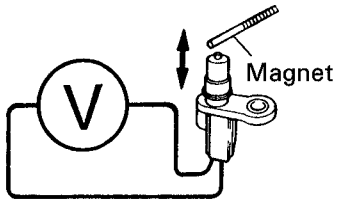

A340F

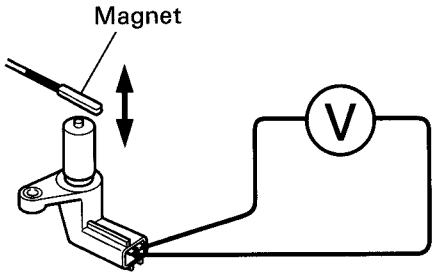

Q08218
Q08292

P Remove No.2 vehicle speed sensor from transmission.

C Measure resistance between terminals 1 and 2 of vehicle speed sensor.

OK **Resistance: 560 ~ 680 Ω**

Reference
Check the vehicle speed sensor's function

C Check voltage between terminals 1 and 2 the vehicle speed sensor when a magnet is put close to the front end of the vehicle speed sensor then taken away quickly.

OK **Voltage is generated intermittently.**

Hint: The voltage generated is extremely low.

OK → **Check and repair harness and connector between ECM and No.2 vehicle speed sensor. (See page IN-24).**

NG → **Replace No.2 vehicle speed sensor.**

AT

DTC P1780 Park/Neutral Position Switch Malfunction

CIRCUIT DESCRIPTION

The park/neutral position switch detects the shift lever position and sends signals to the ECM.

The ECM receives signals (NSW, R, 2 and L) from the park/neutral position switch. When the signal is not sent to the ECM from the park/neutral position switch, the ECM judges that the shift lever is in D position.

DTC No.	DTC Detecting Condition	Trouble Area
P1780	2 or more switches are ON simultaneously for "R", "N", "2" and "L" positions. (2 trip detection logic)	• Short in park/neutral position switch circuit • Park/neutral position switch • ECM
	When driving under conditions a) and b) for 30 seconds or more, the park/neutral position switch is ON (N position). (2 trip detection logic) a) Vehicle speed: 70 km/h (44 mph) or more b) Engine speed: 1,500 ~ 2,500 rpm	

WIRING DIAGRAM

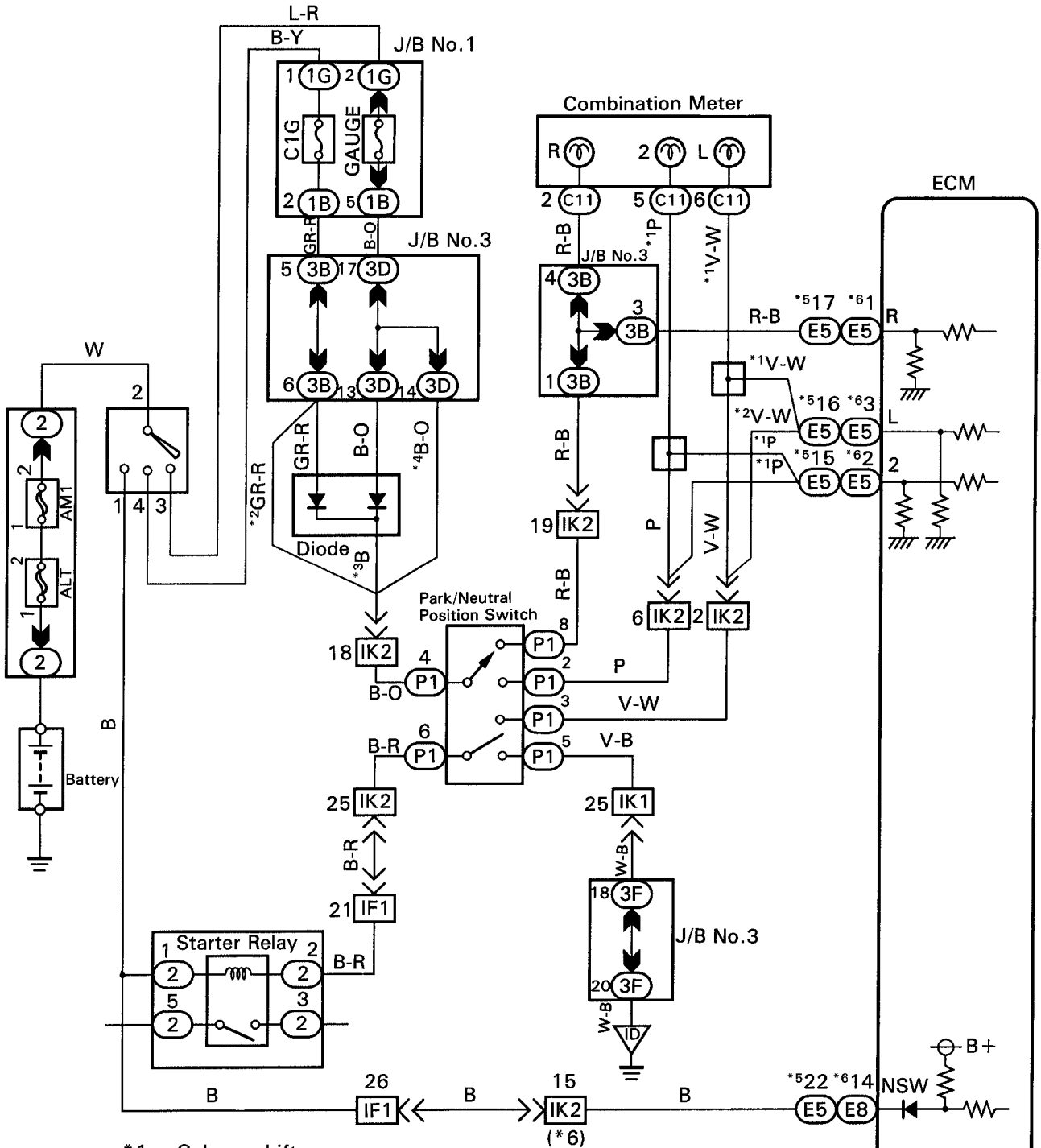

*1: Column shift
*2: Floor shift
*3: Column shift (Canada)
*4: Column shift (USA)
*5: 3RZ-FE
*6: 5VZ-FE

Q08493

INSPECTION PROCEDURE

1	Read PNP, REVERSE, 2ND, LOW signals.

When using TOYOTA hand-held tester:

P 1. Remove the DLC3 cover.
2. Connect the TOYOTA hand-held tester to the DLC3.
3. Turn ignition switch ON and TOYOTA hand-held tester main switch ON.

C Shift the shift lever to the R, 2 and L positions, and read the PNP, REVERSE, 2ND and LOW signal on the TOYOTA hand-held tester.

OK

Shift position	Signal
2	2ND OFF → ON
L	LOW OFF → ON
R	REVERSE OFF → ON
P, N	NSW OFF → ON

When not using TOYOTA hand-held tester:



P Turn ignition switch ON.

C Measure voltage between terminals NSW, 2, L of ECM and body ground when the shift lever is shifted to the following positions.

OK

Position	NSW-body ground	R-body ground	2-body ground	L-body ground
P,N	0 V	0 V	0 V	0 V
R	9 ~ 14V*	9 ~ 14 V	0 V	0 V
D	9 ~ 14V	0 V	0 V	0 V
2	9 ~ 14V	0 V	9 ~ 14 V	0 V
L	9 ~ 14V	0 V	0 V	9 ~ 14 V

*: The voltage will drop slightly due to lighting up of the back up light.

3RZ-FE

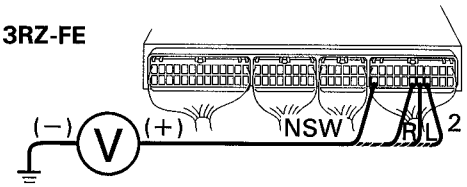

5VZ-FE

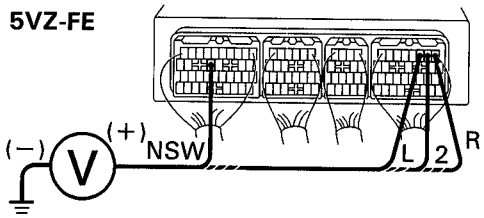

BE3840
Q08479
Q08480

NG

OK → **Proceed to next circuit inspection shown on matrix chart (See page AT-58).**

AT

2 **Check park/neutral position switch.**

P
1. Jack up the vehicle.
2. Remove the park/neutral position switch.

C Check continuity between each terminal shown below when the shift lever is moved to each position.

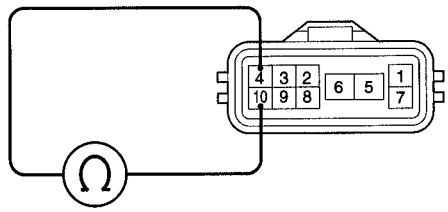

Q07657

○—○ Continuity

Position \ Terminal	6	5	4	7	8	10	9	2	3
P	○	○	○	○					
R			○		○				
N	○	○	○			○			
D			○				○		
2			○					○	
L			○						○

OK → **3** **Check harness and connector between battery and park/neutral position switch, ECM and park/neutral position switch (See page IN-24).**

NG → **Replace park/neutral position switch.**

AT

OK → **Check and replace ECM.**

NG → **Repair or replace harness and connector.**

O/D Cancel Signal Circuit

CIRCUIT DESCRIPTION

While driving uphill with cruise control activated, in order to minimize gear shifting and provide smooth cruising, overdrive may be prohibited temporarily under some conditions.

The cruise control ECU sends O/D cut signals to the ECM as necessary and the ECM cancels overdrive shifting until these signals are discontinued.

WIRING DIAGRAM

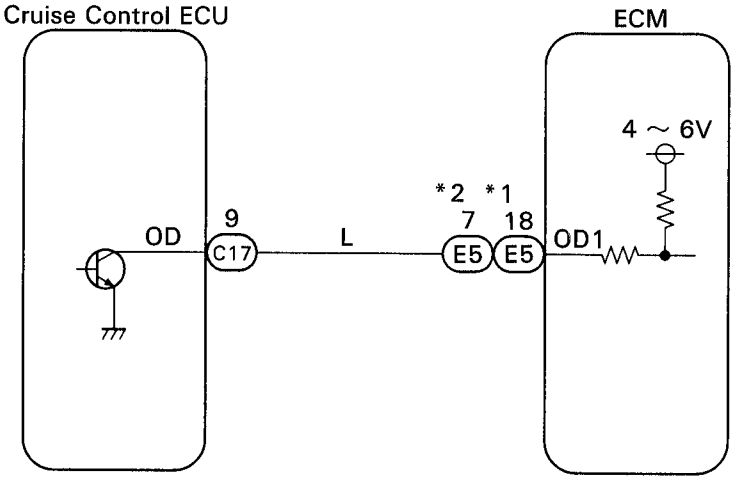

*1: 3RZ-FE
*2: 5VZ-FE

Q07397

INSPECTION PROCEDURE

1 **Check voltage between terminal OD1 of ECM and body ground.**

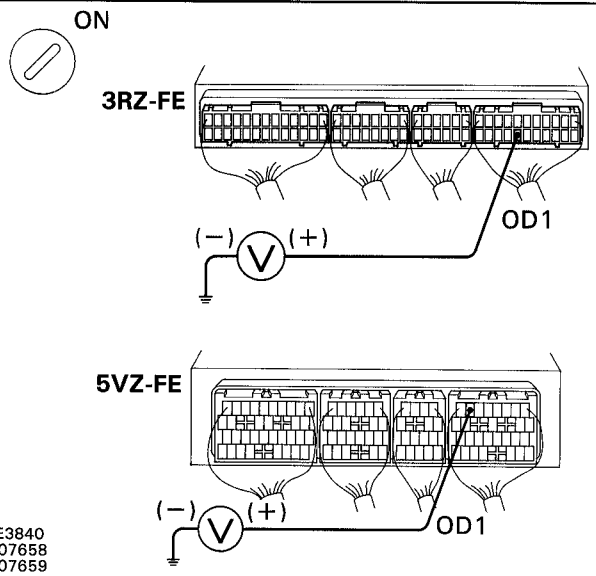

BE3840
Q07658
Q07659

P Turn ignition switch ON.

C Measure voltage between terminal OD1 of ECM and body ground.

OK **Voltage: 4 ~ 6 V**

AT

NG

OK → **Proceed to next circuit inspection shown on matrix chart (See page AT-58).**

2 **Check voltage between terminal OD of cruise control ECU harness side connector and body ground.**

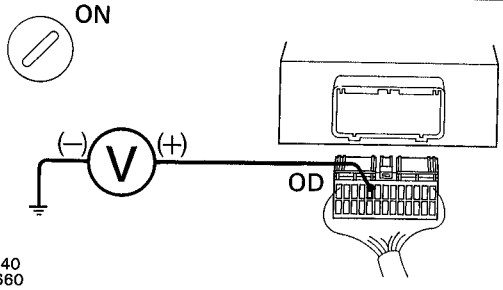

BE3840
Q07660

P 1. Disconnect cruise control ECU connector.
2. Turn ignition switch ON.

C Measure voltage between terminal OD of cruise control ECU harness side connector and body ground.

OK **Voltage: 4 ~ 6 V**

NG

OK → **Check and replace cruise control ECU.**

3	Check harness and connector between cruise control ECU and ECM.

OK

NG → Repair or replace harness or connector.

Check and replace ECM.

O/D Main Switch & O/D OFF Indicator Light Circuit

CIRCUIT DESCRIPTION

The O/D main switch contacts go open when the switch is pushed in and go closed when it is pushed out. In O/D main switch at OFF position, the O/D OFF indicator light lights up, and the ECM prohibits shifting to overdrive.

WIRING DIAGRAM

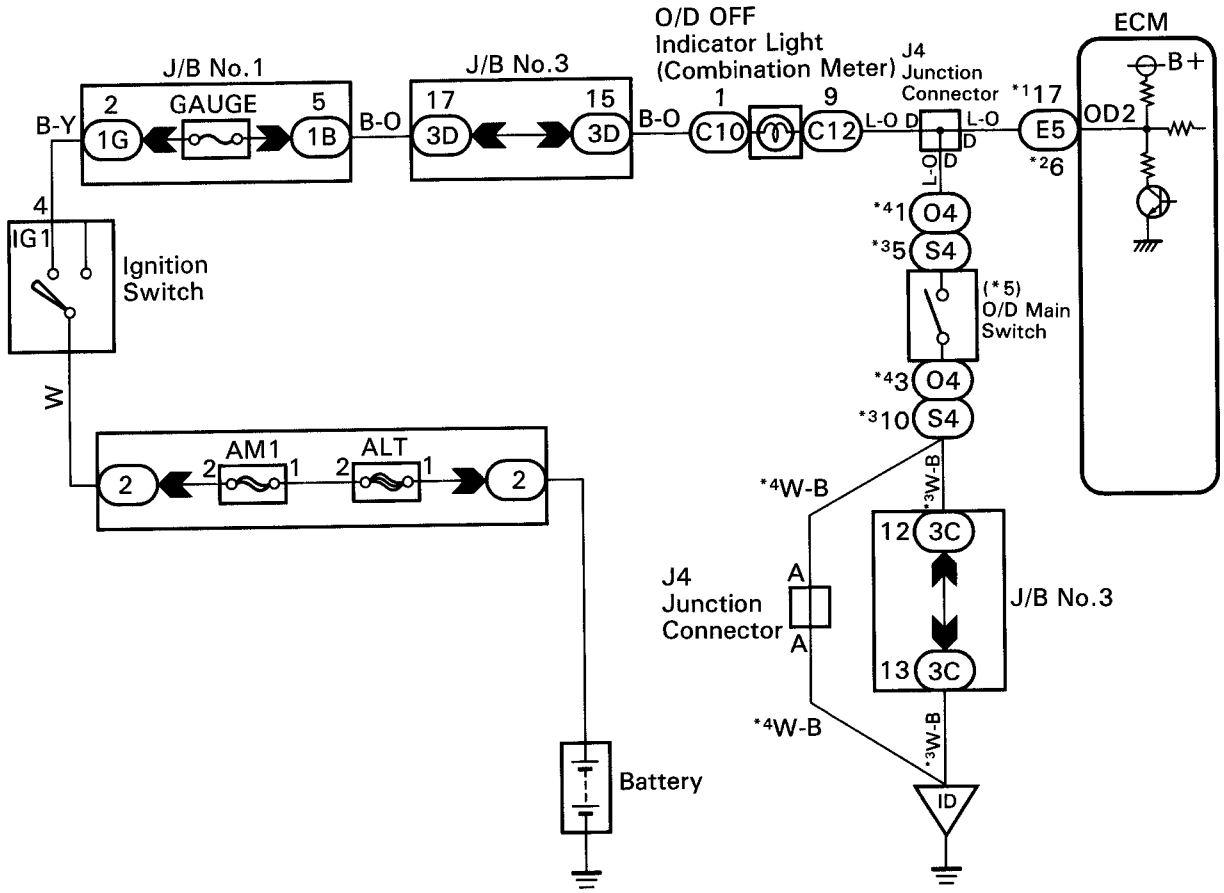

Q08622

INSPECTION PROCEDURE

O/D OFF indicator light does not light up.

1 Check operation of O/D Main Switch.

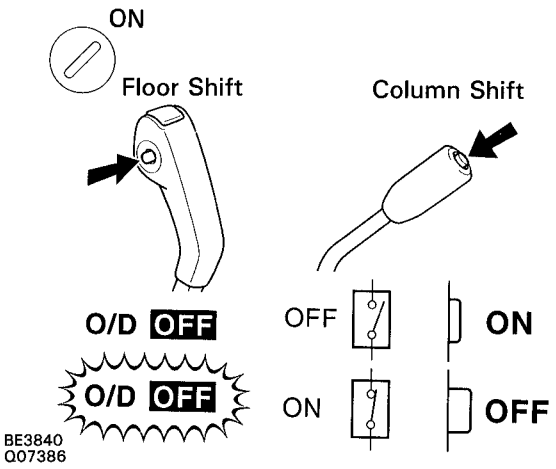

C 1. Turn ignition switch ON.
2. Check "O/D OFF" indicator light when O/D main switch is pushed in to ON.

OK **"O/D OFF" indicator light goes off.**

C 3. Check "O/D OFF" indicator light when O/D main switch is pushed again, to OFF.

OK **"O/D OFF" indicator light lights up.**

OK

NG → **Go to step 4 .**

2 Check OVRDRIVE CUT SW2 signal.

When using TOYOTA hand-held tester:

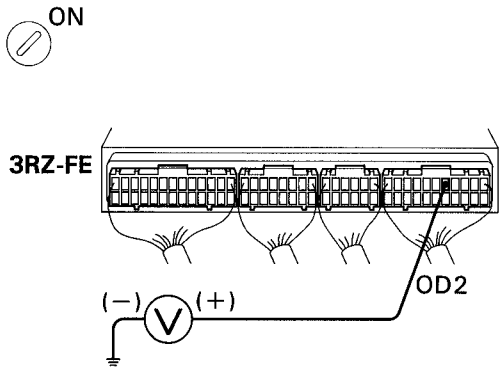

P 1. Remove the DLC3 cover.
2. Connect the TOYOTA hand-held tester to the DLC3.
3. Turn ignition switch ON and TOYOTA hand-held tester main switch ON.

C Read the OD2 signal on the TOYOTA hand-held tester.

OK **O/D main switch pushed in:**
OVRDRIVE CUT SW2 OFF
O/D main switch pushed out:
OVRDRIVE CUT SW2 ON

When not using TOYOTA hand-held tester:

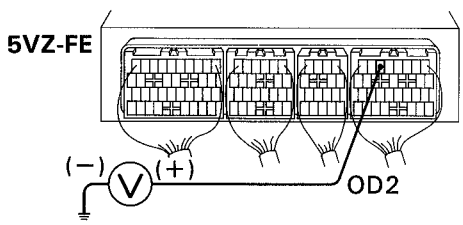

P Turn ignition switch ON.

C Check voltage between terminal OD2 of ECM and body ground.

OK

O/D Main Switch	Voltage
OFF	Below 1.5 V
ON	9 ~ 14 V

NG

OK → **Proceed to next circuit inspection shown on matrix chart (See page AT-58).**

3 **Check harness and connector between O/D OFF indicator light and ECM (See page IN-24).**

OK → **Check and replace ECM.**

NG → **Repair or replace harness or connector.**

4 **Check O/D Main Switch.**

Column Shift

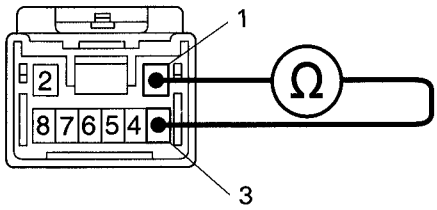

Floor Shift

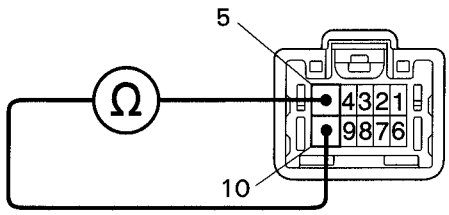

Q08283
Q08284

C
1. Disconnect O/D main switch connector.
2. Measure resistance at each terminal of O/D main switch connector.

OK

O/D Main Switch	Resistance
ON	∞ Ω (open)
OFF	0 Ω (continuity)

OK → **Check and replace combination meter. (See page BE-34).**

NG → **Replace O/D main switch.**

O/D OFF indicator light remains ON

1 Check O/D Main Switch.

Column Shift

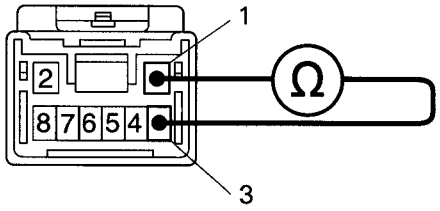

Floor Shift

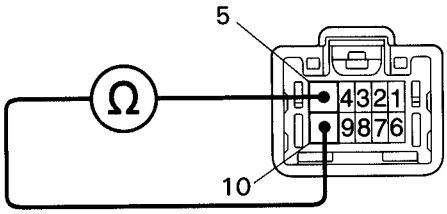

Q08283
Q08284

C

1. Disconnect O/D main switch connector.
2. Measure resistance at each terminal of O/D main switch connector.

OK

O/D Main Switch	Resistance
ON	∞ Ω (open)
OFF	0 Ω (continuity)

OK → **2 Check harness and connector between O/D OFF indicator light and O/D main switch, O/D OFF indicator light and ECM (See page IN-24).**

NG → **Replace O/D main switch.**

OK → **Check and replace ECM.**

NG → **Repair or replace harness or connector.**

AT

Pattern Select Switch Circuit

CIRCUIT DESCRIPTION

The ECM memory contains the shift programs for the NORMAL and POWER patterns, 2 position, L position and the lock-up patterns. Following the programs corresponding to the signals from the pattern select switch, the park/neutral position and other various sensors, the ECM switches the solenoid valves ON and OFF, and controls the transmission gear change and the lock-up clutch operation.

WIRING DIAGRAM

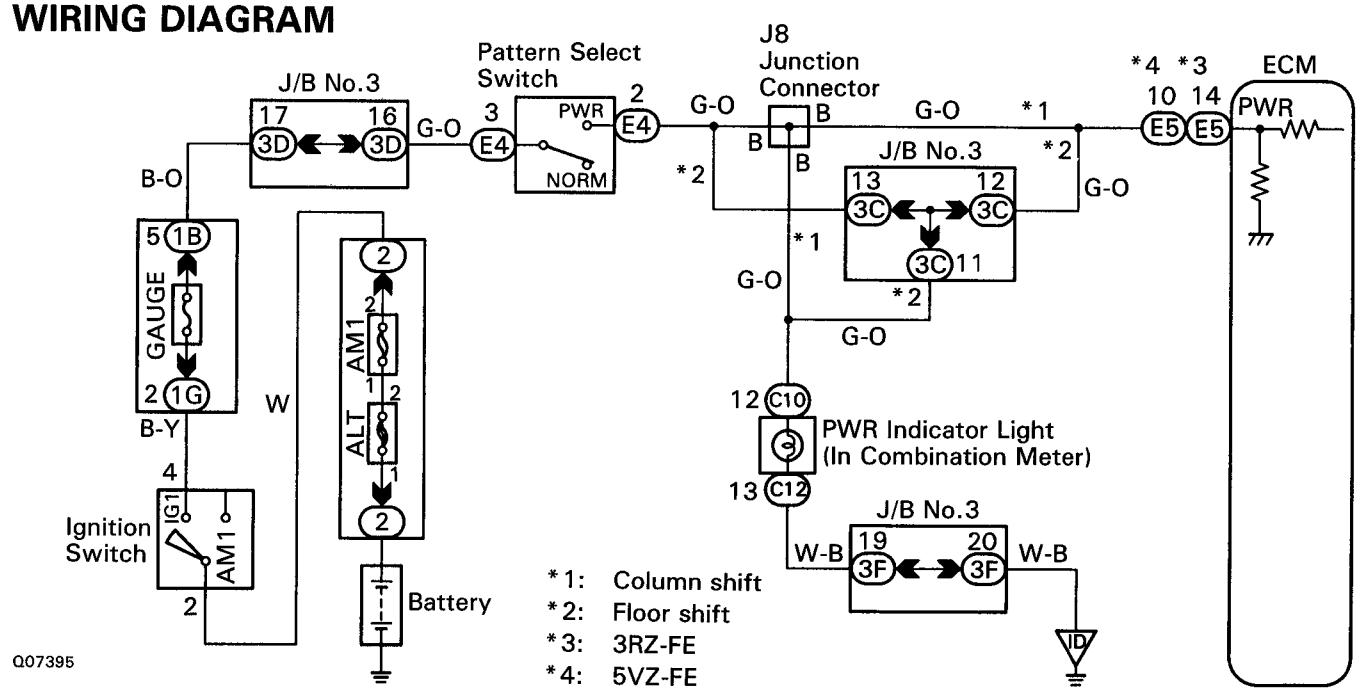

INSPECTION PROCEDURE

1 **Check PATTERN SEL SW signal.**

AT

When using TOYOTA hand-held tester:

P
1. Remove the DLC3 cover.
2. Connect the TOYOTA hand-held tester to the DLC3.
3. Turn ignition switch ON and TOYOTA hand-held tester main switch ON.

C Read the PWR signal on the TOYOTA hand-held tester.

OK **Pattern select switch pushed in:**
PATTERN SEL SW ON
Pattern select switch pushed out:
PATTERN SEL SW OFF

When not using TOYOTA hand-held tester:

P Turn ignition switch ON.

C Measure voltage between terminal PWR of ECM and body ground when the pattern select switch is set to the PWR (POWER) position and NORM (NORMAL) position.

OK

Pattern select switch	Voltage
PWR	10 ~ 14 V
NORM	Below 1 V

Hint: The ECM uses the normal pattern signal if the PWR signal is not input.

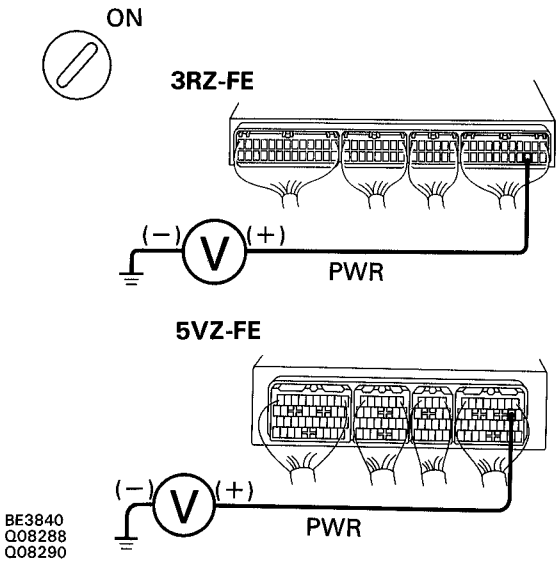

NG

OK → **Proceed to next circuit inspection shown on matrix chart (See page AT-58).**

2 **Check pattern select switch.**

P Disconnect pattern select switch connector.

C Measure resistance between 2 and 3 terminals pattern select switch connector when the select switch is set to PWR and NORM positions.

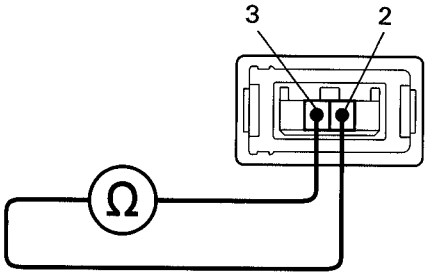

Q08286

Pattern	Resistance
PWR	0 Ω (continuity)
NORM	∞ Ω (open)

OK

NG → **Replace pattern select switch.**

3 **Check harness and connector between battery and pattern select switch, pattern select switch and ECM (See page IN-24).**

OK

NG → **Repair or replace harness or connector.**

Check and replace ECM.

AT

Stop Light Switch Circuit

CIRCUIT DESCRIPTION

The purpose of this circuit is to prevent the engine from stalling, while driving in lock-up condition, when brakes are suddenly applied.

When the brake pedal is operated, this switch sends a signal to ECM. Then the ECM cancels operation of the lock-up clutch while braking is in progress.

WIRING DIAGRAM

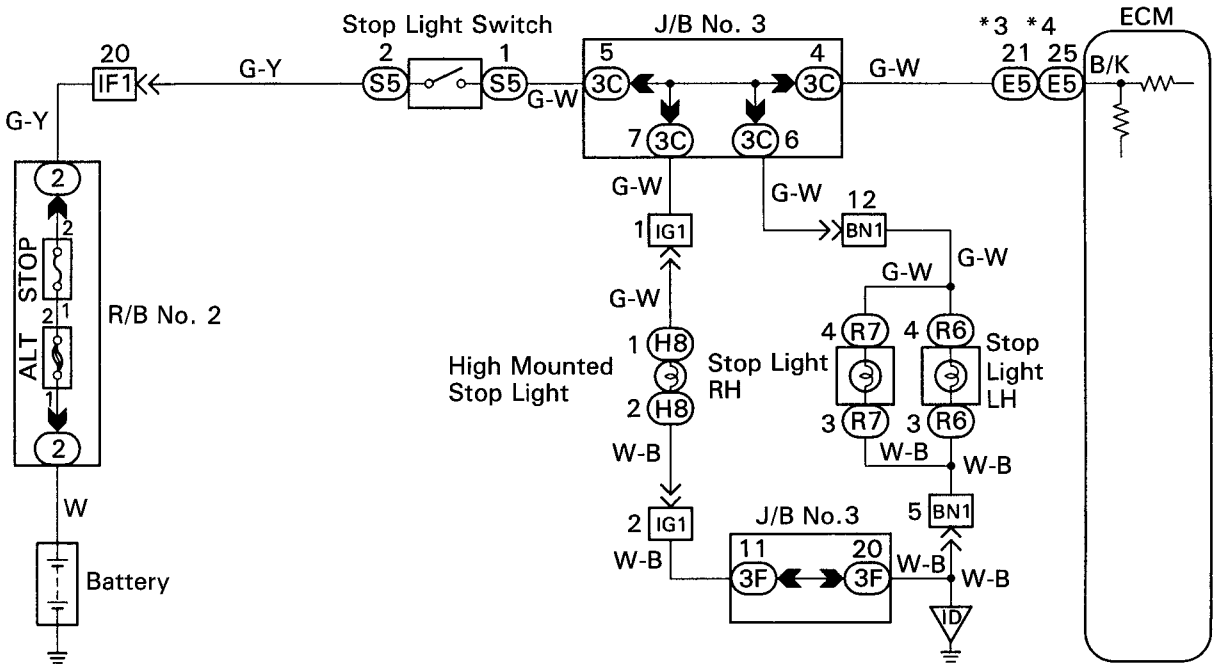

*1: w/ Cruise Control System
*2: w/o Cruise Control System
*3: 3RZ-FE
*4: 5VZ-FE

AT Q08623

INSPECTION PROCEDURE

1	Check operation of stop light.

C Check if the stop lights go on and off normally when the brake pedal is operated and released.

OK

NG → Check and repair stop light circuit.

2 Check STP signal.

When using OBD Ⅱ scan tool or TOYOTA hand-held tester:

P 1. Connect the OBD Ⅱ scan tool or TOYOTA hand-held tester to the DLC3.
2. Turn ignition switch ON and OBD Ⅱ scan tool or TOYOTA hand-held tester main switch ON.

C Read the STP signal on the TOYOTA hand-held tester.

OK **Brake pedal is depressed: STP ON**
Brake pedal is released: STP OFF

When not using OBD Ⅱ scan tool or TOYOTA hand-held tester:

P Turn ignition switch ON.

C Check voltage between terminal B/K of ECM and body ground.

OK

Brake pedal	Voltage
Depressed	7.5 ~ 14 V
Released	Below 1.5 V

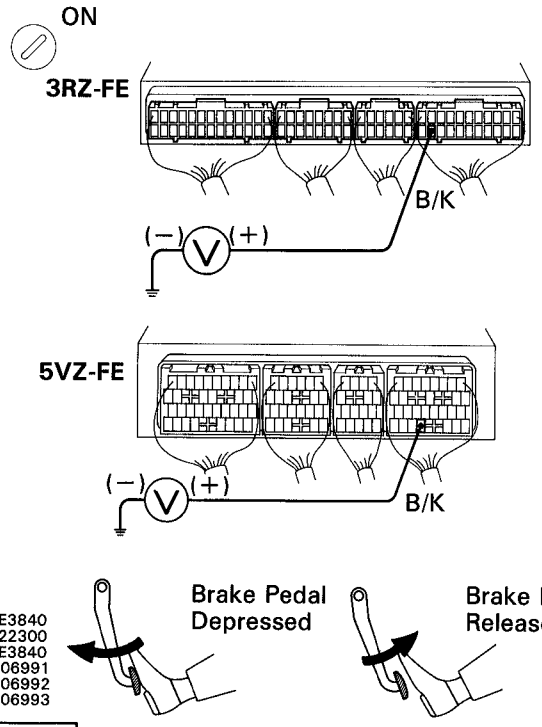

NG

OK → **Proceed to next circuit inspection shown on matrix chart (See page AT-58).**

3 Check harness and connector between ECM and stop light switch.

OK

NG → **Repair or replace harness or connector.**

Check and replace ECM.

A/T.P. (Automatic Transmission Parking) Indicator Circuit

CIRCUIT DESCRIPTION

The propeller shaft and wheels are free even when the transmission shift lever is set to "P" as long as the transfer shift lever is in "neutral" position. The A/T.P. indicator light lights up to warn the driver that the propeller shaft and wheels are not locked. If the A/T.P. indicator light goes on, the transfer shift lever should be shifted out of "N" position.

WIRING DIAGRAM

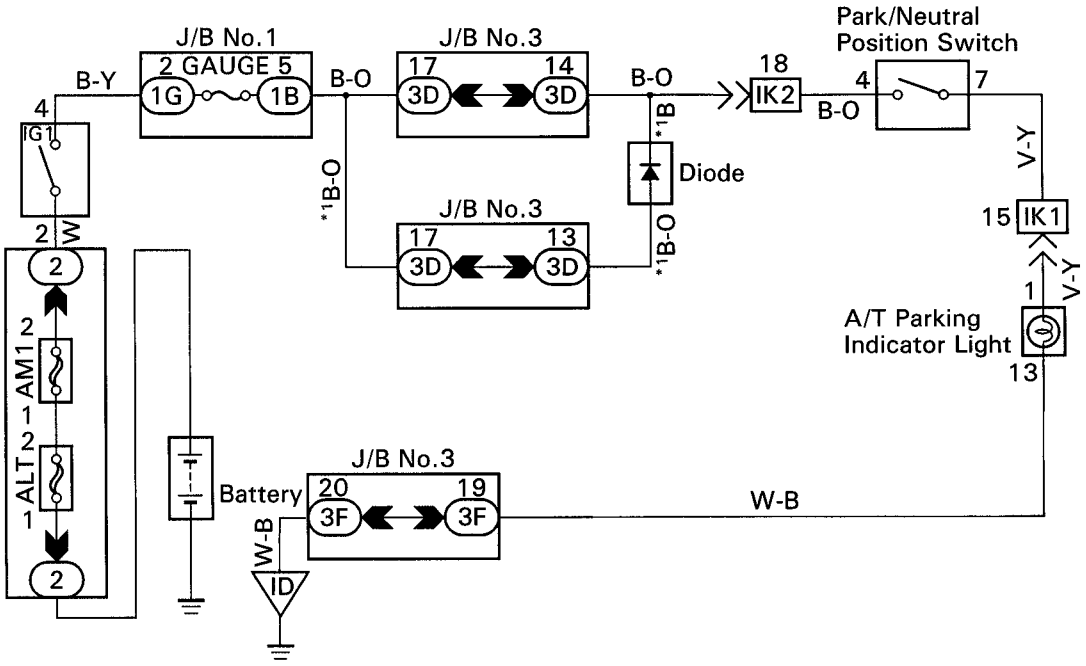

*1: Canada Column only

Q08621

INSPECTION PROCEDURE

1 Check park/neutral position switch (See page AT-73).

OK

NG → Replace park/neutral position switch.

2 Check transfer neutral position switch (See page TR-20).

NG

OK → Replace transfer neutral position switch.

3 Check combination meter (See page BE-34).

OK

NG → Repair or replace combination meter.

Check and replace harness and connector.
(See page IN-24)

SERVICE SPECIFICATIONS

SERVICE DATA

AT0VX-03

3RZ-FE (A340E):

Line pressure (wheel locked)			
Engine idling			
D position	363-422 kPa	3.7-4.2 kgf/cm²	53-61 psi
R position	490-588 kPa	5.0-6.0 kgf/cm²	71-85 psi
AT stall (Throttle valve fully opened)			
D position	932-1,177 kPa	9.5-12.0 kgf/cm²	135-171 psi
R position	1,294-1,638 kPa	13.2-16.7 kgf/cm²	188-238 psi
Engine stall revolution — D and R positions	1,950 ± 150 rpm		
Time lag — N → D position	Less than 1.2 seconds		
N → R position	Less than 1.5 seconds		
Engine idle speed (A/C OFF)			
N position	700 ± 50 rpm		
Throttle cable adjustment (Throttle valve fully closed)	Between boot and face and inner cable stopper		
	0-1 mm	0-0.04 in.	
Torque converter clutch installation distance	More than 31.75 mm	More than 1.2500 in.	
Drive plate runout — Max.	0.20 mm	0.0079 in.	
Torque converter clutch runout — Max.	0.30 mm	0.0118 in.	

TIRE SIZE: 31 X 10.5R15

SHIFT POINT (NORM and PWR Pattern)

Shift position	Shifting point		Vehicle speed km/h (mph)
D	Throttle valve fully opened	1→2	52-56 (32-35)
		2→3	93-101 (58-63)
		3→O/D	132-140 (82-87)
		O/D→3	126-134 (78-83)
		3→2	87-92 (54-57)
		2→1	41-45 (25-28)
	Throttle valve fully closed	3→O/D	32-36 (20-22)
		O/D→3	24-28 (15-17)
2	Throttle valve fully opened	1→2	52-56 (32-35)
		3→2	104-112 (65-70)
		2→1	41-45 (25-28)
L	Throttle valve fully opened	3→2	89-97 (55-60)
		2→1	50-55 (31-34)

LOCK-UP POINT (NORM and PWR Pattern)

D position — Throttle valve opening 5%	Lock-up ON km/h (mph)	Lock-up OFF km/h (mph)
O/D Gear	76-81 (47-50)	70-75 (44-47)

TIRE SIZE: P255/75R15
SHIFT POINT (NORM and PWR Pattern)

Shift position	Shifting point		Vehicle speed km/h (mph)
D	Throttle valve fully opened	1→2	53—58 (33—36)
		2→3	96—104 (60—65)
		3→O/D	135—144 (84—89)
		O/D→3	129—138 (80—86)
		3→2	89—95 (55—59)
		2→1	42—47 (26—29)
	Throttle valve fully closed	3→O/D	33—37 (21—23)
		O/D→3	24—29 (15—18)
2	Throttle valve fully opened	1→2	53—58 (33—36)
		3→2	107—116 (66—72)
		2→1	42—47 (26—29)
L	Throttle valve fully opened	3→2	91—100 (57—62)
		2→1	52—56 (32—35)

LOCK—UP POINT (NORM and PWR Pattern)

D position Throttle valve opening 5%	Lock—up ON km/h (mph)	Lock—up OFF km/h (mph)
O/D Gear	78—83 (48—52)	72—77 (45—48)

AT

5VZ—FE (A340E and A340F):

Line pressure (wheel locked)				
	Engine idling			
	D position	363—422 kPa	3.7—4.3 kgf/cm²	53—61 psi
	R position	608—696 kPa	6.2—7.1 kgf/cm²	88—101 psi
	AT stall(Throttle valve fully opened)			
	D position	902—1,147 kPa	9.2—11.7 kgf/cm²	131—166 psi
	R position	1,432—1,942 kPa	14.6—19.8 kgf/cm²	208—282 psi
Engine stall revolution	D and R positions	2,150 ± 150 rpm		
Time lag	N → D position	Less than 1.2 seconds		
	N → R position	Less than 1.5 seconds		
Engine idle speed (A/C OFF)				
	N position	700 ± 50 rpm		
Throttle cable adjustment (Throttle valve fully closed)		Between boot and face and inner cable stopper		
		0—1 mm	0—0.04 in.	
Torque converter clutch installation distance3RZ—FE		More than 31.75 mm	More than 1.2500 in.	
	5VZ—FE	More than 17.95 mm	More than 0.7067 in.	
Drive plate runout	Max.	0.20 mm	0.0079 in.	
Torque converter clutch runout	Max.	0.30 mm	0.0118 in.	

A340E:

SHIFT POINT (NORM and PWR Pattern)

Shift position	Shifting point		Vehicle speed km/h (mph)
D	Throttle valve fully opened	1→2	64–69 (40–43)
		2→3	120–130 (75–81)
		3→O/D	162–172 (101 – 107)
		O/D→3	154–164 (96–102)
		3→2	111–120 (69–75)
		2→1	51–56 (32–35)
	Throttle valve fully closed	3→O/D	47–52 (29–32)
		O/D→3	25–30 (16–19)
2	Throttle valve fully opened	1→2	64–69 (40–43)
		3→2	128–137 (80–85)
		2→1	51–56 (32–35)
L	Throttle valve fully opened	3→2	109–118 (68–73)
		2→1	62–67 (38–42)

LOCK–UP POINT (NORM and PWR Pattern)

D position Throttle valve opening 5%	Lock–up ON km/h (mph)	Lock–up OFF km/h (mph)
O/D Gear	81–86 (50–53)	73–79 (45–49)

A340F:

TIRE SIZE: 31 X 10.5R15

SHIFT POINT (NORM and PWR Pattern)

Shift position	Shifting point		Vehicle speed km/h (mph)
D	Throttle valve fully opened	1→2	58–63 (36–39)
		2→3	109–117 (68–73)
		3→O/D	147–156 (91–97)
		O/D→3	140–149 (87–93)
		3→2	100–109 (62–68)
		2→1	46–50 (29–31)
	Throttle valve fully closed	3→O/D	42–47 (26–29)
		O/D→3	22–27 (14–18)
2	Throttle valve fully opened	1→2	58–63 (36–39)
		3→2	116–125 (72–78)
		2→1	46–50 (29–31)
L	Throttle valve fully opened	3→2	99–107 (62–68)
		2→1	56–61 (35–38)

LOCK–UP POINT (NORM and PWR Pattern)

D position Throttle valve opening 5%	Lock–up ON km/h (mph)	Lock–up OFF km/h (mph)
O/D Gear	73–78 (45–48)	66–71 (41–44)

A340F:
TIRE SIZE: P225/75R15
SHIFT POINT (NORM and PWR Pattern)

Shift position	Shifting point		Vehicle speed km/h (mph)
D	Throttle valve fully opened	1→2	56–61 (35–38)
		2→3	105–114 (65–71)
		3→O/D	142–152 (88–94)
		O/D→3	135–145 (84–90)
		3→2	97–106 (60–66)
		2→1	44–49 (27–30)
	Throttle valve fully closed	3→O/D	41–46 (25–29)
		O/D→3	22–26 (14–16)
2	Throttle valve fully opened	1→2	56–61 (35–38)
		3→2	112–121 (70–75)
		2→1	44–49 (27–30)
L	Throttle valve fully opened	3→2	95–105 (59–65)
		2→1	54–59 (34–37)

LOCK–UP POINT (NORM and PWR Pattern)

D position Throttle valve opening 5%	Lock–up ON km/h (mph)	Lock–up OFF km/h (mph)
O/D Gear	71–76 (44–47)	64–69 (40–43)

AT

AT03W-0A

TORQUE SPECIFICATIONS

Part tightened		N·m	kgf·cm	ft·lbf
Valve body x Transmission case		10	100	7
Oil strainer x Valve body (A340E)		10	100	7
Oil strainer case x Valve body (A340F)		10	100	7
Oil strainer x Oil strainer case (A340F)		6.9	70	61 in.·lbf
Oil pan		7.4	75	65 in.·lbf
Drain plug		20	205	15
Parking lock pawl bracket x Transmission case		7.4	75	65 in.·lbf
Extension housing x Transmission case (A340E)		36	370	27
Extension housing x Rear mounting insulator		25	260	19
Rear support member x Rear mounting insulator (A340F)		18	185	13
Rear support member x Body (A340F)		95	970	70
Rear mounting insulator x Rear mounting bracket (A340E)		18	185	13
Rear mounting bracket x Frame (A340E)		58	590	42
Center support bearing x Body		36	370	27
Drive plate x Crankshaft (3RZ—FE)		74	750	54
Drive plate x Crankshaft (5VZ—FE)		83	850	61
Torque converter clutch x Drive plate		41	420	30
Front exhaust pipe x Exhaust manifold		62	630	46
Front exhaust pipe x TWC		48	490	35
Rear support member x Dynamic damper		61	620	44
Oil cooler pipe union nut		34	350	25
Transmission x Engine		71	730	53
Rear end plate x Transmission (3RZ—FE)		37	380	27
Rear end plate x Transmission (5VZ—FE)		18	185	13
Exhaust pipe clamp (3RZ—FE)		19	195	14
Exhaust pipe support bracket x Transmission (3RZ—FE)		71	730	53
Exhaust pipe support bracket x Transmission (5VZ—FE)		44	450	33
Exhaust pipe support bracket x Exhaust pipe (5VZ—FE)		44	450	33
Park/Neutral position switch	Nut	6.9	70	61 in.·lbf
	Bolt	13	130	9
No.2 vehicle speed sensor		5.4	55	48 in.·lbf
Speedometer driven gear sleeve x Locking plate		16	160	12
ATF Temperature sensor x Transmission		15	150	11
Solenoid valve x Valve body		10	100	7

AT

TRANSFER

PRECAUTION ..... TR– 2
PREPARATION ..... TR– 2
TROUBLESHOOTING ..... TR– 5
ASSEMBLY REMOVAL AND INSTALLATION ..... TR– 6
COMPONENT PARTS REMOVAL ..... TR– 7
OIL PUMP BODY ..... TR– 21
DRIVEN SPROCKET ..... TR– 23
REAR OUTPUT SHAFT ..... TR– 25
INPUT SHAFT ..... TR– 33
PLANETARY GEAR ..... TR– 35
OIL SEALS ..... TR– 37
COMPONENT PARTS INSTALLATION ..... TR– 39
ONE TOUCH 2–4 SELECTOR SYSTEM ..... TR– 39
SERVICE SPECIFICATIONS ..... TR– 44

PRECAUTION

TR00P-0E

When working with FIPG material, you must observe the following.

- **Using a razor blade and gasket scraper, remove all the old packing (FIPG) material from the gasket surfaces.**
- **Thoroughly clean all components to remove all the loose material.**
- **Clean both sealing surfaces with a non–residue solvent.**
- **Apply FIPG in approx. 1 mm (0.04 in.) wide bead along the sealing surface.**
- **Parts must be assembled within 10 minutes of application. Otherwise, the packing (FIPG) material must be removed and reapplied.**

PREPARATION

SST (SPECIAL SERVICE TOOLS)

TR03E-05

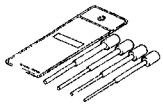	09201–10000	Valve Guide Bushing Remover & Replacer Set	
	(09201–01080)	Valve Guide Bushing Remover & Replacer 8	Speedometer driven gear oil seal
	09223–15020	Oil Seal & Bearing Replacer	Planetary gear outer bearing
	09304–12012	Input Shift Front Bearing Replacer	Shift fork shaft oil seal
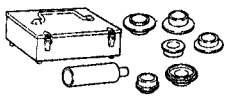	09316–60011	Transmission & Transfer Bearing Replacer	
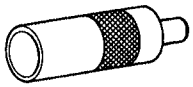	(09316–00011)	Replacer Pipe	High and low clutch hub Rear output shaft bearing Front case oil seal
	(09316–00071)	Replacer "F"	Rear output shaft bearing
	09330–00021	Companion Flange Holding Tool	Companion flange
	09515–30010	Rear Wheel Bearing Replacer	Planetary gear outer bearing
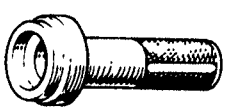	09554–22010	Differential Oil Seal Replacer	Extension housing oil seal

TR

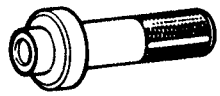	09554–30011	Differential Oil Seal Replacer	Planetary gear outer bearing
	09555–55010	Differential Drive Pinion Bearing Replacer	Driven sprocket rear bearing Rear output shaft bearing Planetary gear outer bearing
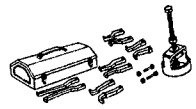	09612–65014	Steering Worm Bearing Puller	
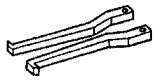	(09612–01030)	Claw "C"	Planetary gear inner bearing
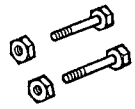	(09612–01050)	Hanger Pin with Nut	Planetary gear inner bearing
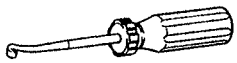	09921–00010	Spring Tension Tool	Speedometer driven gear oil seal Oil pump spring seat
	09950–40010	Puller B Set	
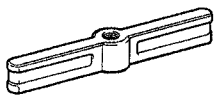	(09951–04020)	Hanger 200	Companion flange
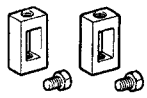	(09952–04010)	Slide Arm	Companion flange
	(09953–04030)	Center Bolt 200	Companion flange
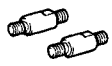	(09954–04010)	Arm 25	Companion flange
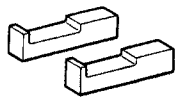	(09955–04050)	Claw No.5	Companion flange
	(09957–04010)	Attachment	Companion flange
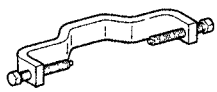	(09958–04010)	Holder	Companion flange

TR

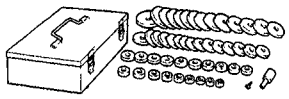	09950–60010 Replacer Set	
	(09951–00220) Replacer 22	Companion flange oil seal
	(09951–00350) Replacer 35	Companion flange oil seal
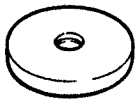	(09951–00570) Replacer 57	Planetary gear inner bearing
	(09951–00590) Replacer 59	Front bearing retainer oil seal
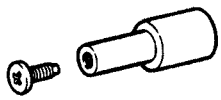	(09952–06010) Adapter	Companion flange oil seal
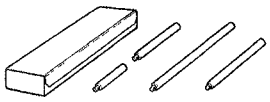	09950–70010 Handle Set	
	(09951–07100) Handle 100	Front bearing retainer oil seal Planetary gear outer bearing Planetary gear inner bearing Companion flange oil seal
	(09951–07150) Handle 150	Speedometer driven gear oil seal

MT013–0K

RECOMMENDED TOOLS

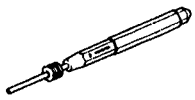	09031–00030 Pin Punch .	
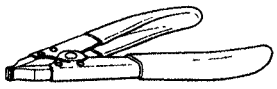	09905–00012 Snap Ring No.1 Expander .	

MX027–0Y

EQUIPMENT

Calipers	
Dial indicator	
Micrometer	
Torque wrench	
Feeler gauge	

LUBRICANT

MX028–1B

Item	Capacity	Classification
Transfer oil	1.0 liters (1.1 US qts, 0.9 Imp.qts)	API GL–4 or GL–5 SAE 75W–90

SSM (SPECIAL SERVICE MATERIALS)

MX029–0W

08826–00090	Seal Packing 1281, THREE BOND 1281 or equivalent (FIPG)	Front case x Rear case Rear companion flange Extension housing x Rear case Front retainer x Front case
08833–00080	Adhesive 1344, THREE BOND 1344, LOCTITE 242 or equivalent	Straight screw plug Extension housing set bolt Front retainer set bolt

TROUBLESHOOTING

TR003–06

Use the table below to help you find the cause of the problem. The numbers indicate the priority of the likely cause of the problem. Check each part in order. If necessary, replace these parts.

See Page / Parts Name / Trouble	TR-7, 8, 9	TR-5	TR-5	TR-5	TR-37	TR-7, 8, 9
	Transfer faulty	Wrong oil grade	Oil lever low	Oil level too high	Oil seal, O-ring or gasket worn or damaged	Center differential or transfer faulty
Noise	3	2	1			
Oil leakage				1	2	
Tight corner braking						1

V06800

TR

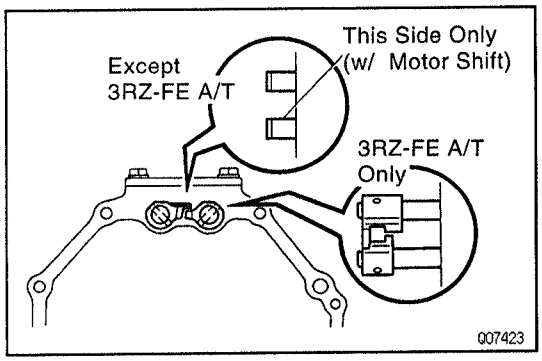

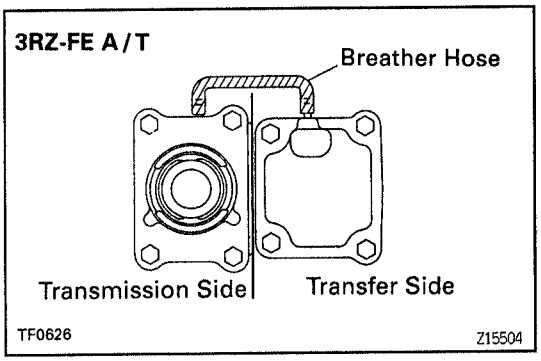

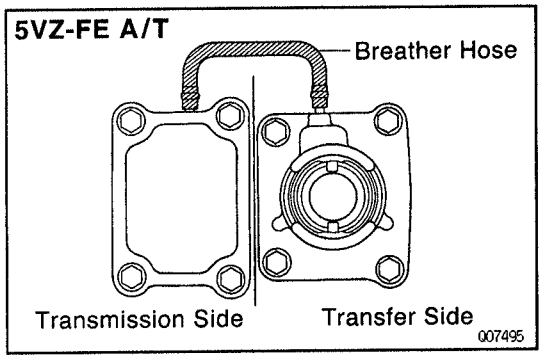

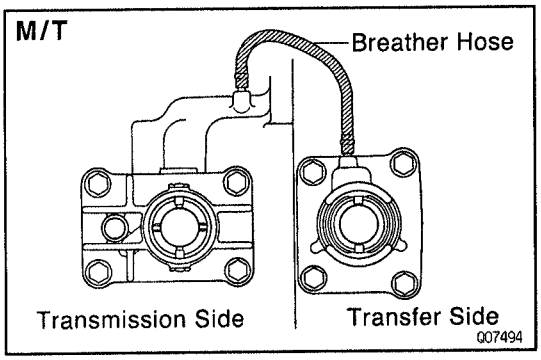

ASSEMBLY REMOVAL AND INSTALLATION

TR04E-02

ASSEMBLY REMOVAL

1. REMOVE TRANSFER WITH TRANSMISSION

M/T – See pages R150F MT–8 and W59 MT–8.

A/T – See page AT–19.

INSTALLATION HINT:

- Apply MP grease to the transfer adaptor oil seal.
- w/o One touch 2–4 selector system:
  Shift the 2 shift fork shafts to the high–4 position.
- w/ One touch 2–4 selector system:
  Shift the shift fork shaft to the high–2 position.

2. REMOVE BREATHER HOSE

Disconnect the breather hose from transfer upper cover and transmission control retainer.

Hose depth:

13 mm (0.51 in.) or more

TR05D-01

ASSEMBLY INSTALLATION

Installation is in the reverse order of removal.

COMPONENT PARTS REMOVAL

COMPONENTS

TR05E–01

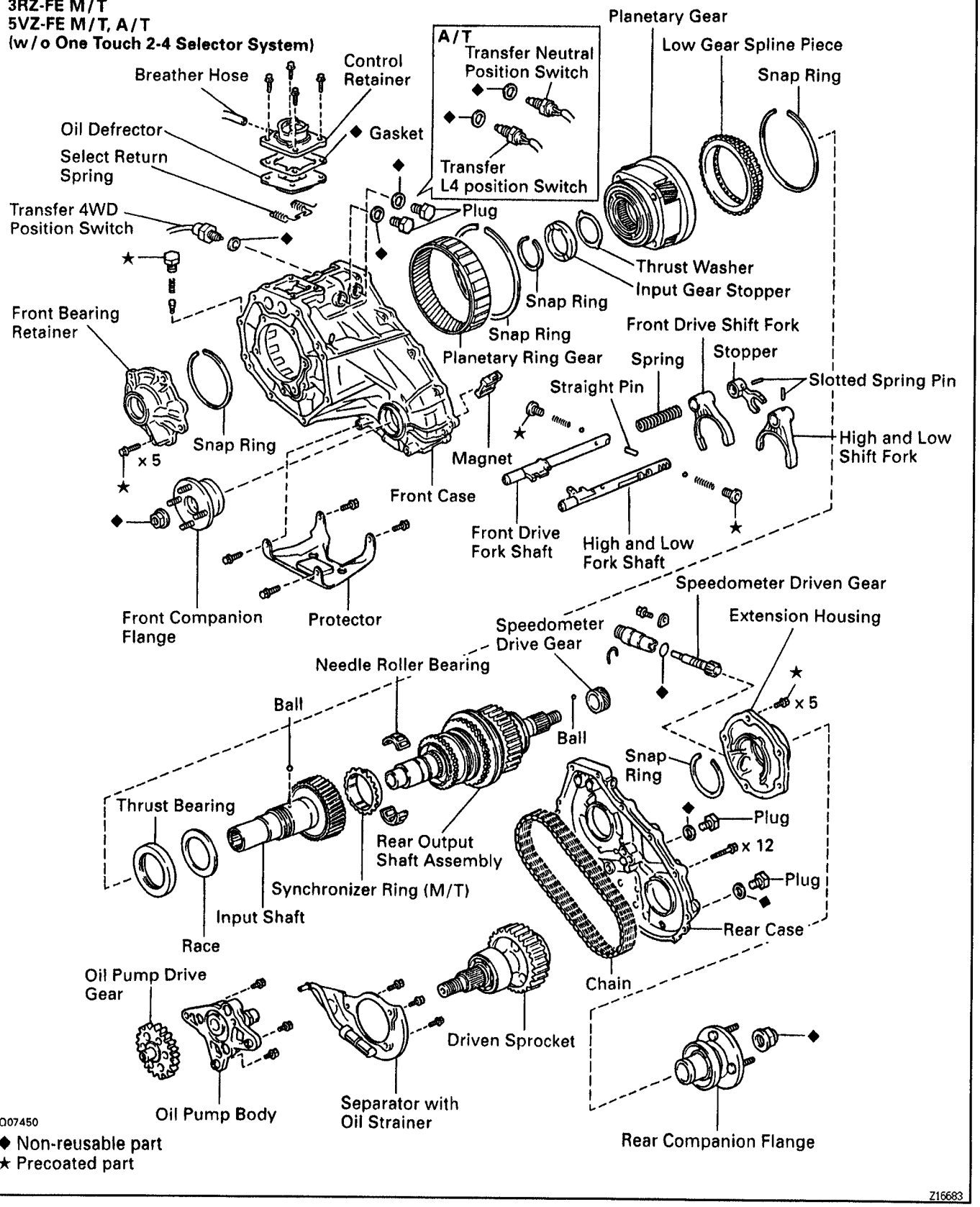

3RZ-FE A/T

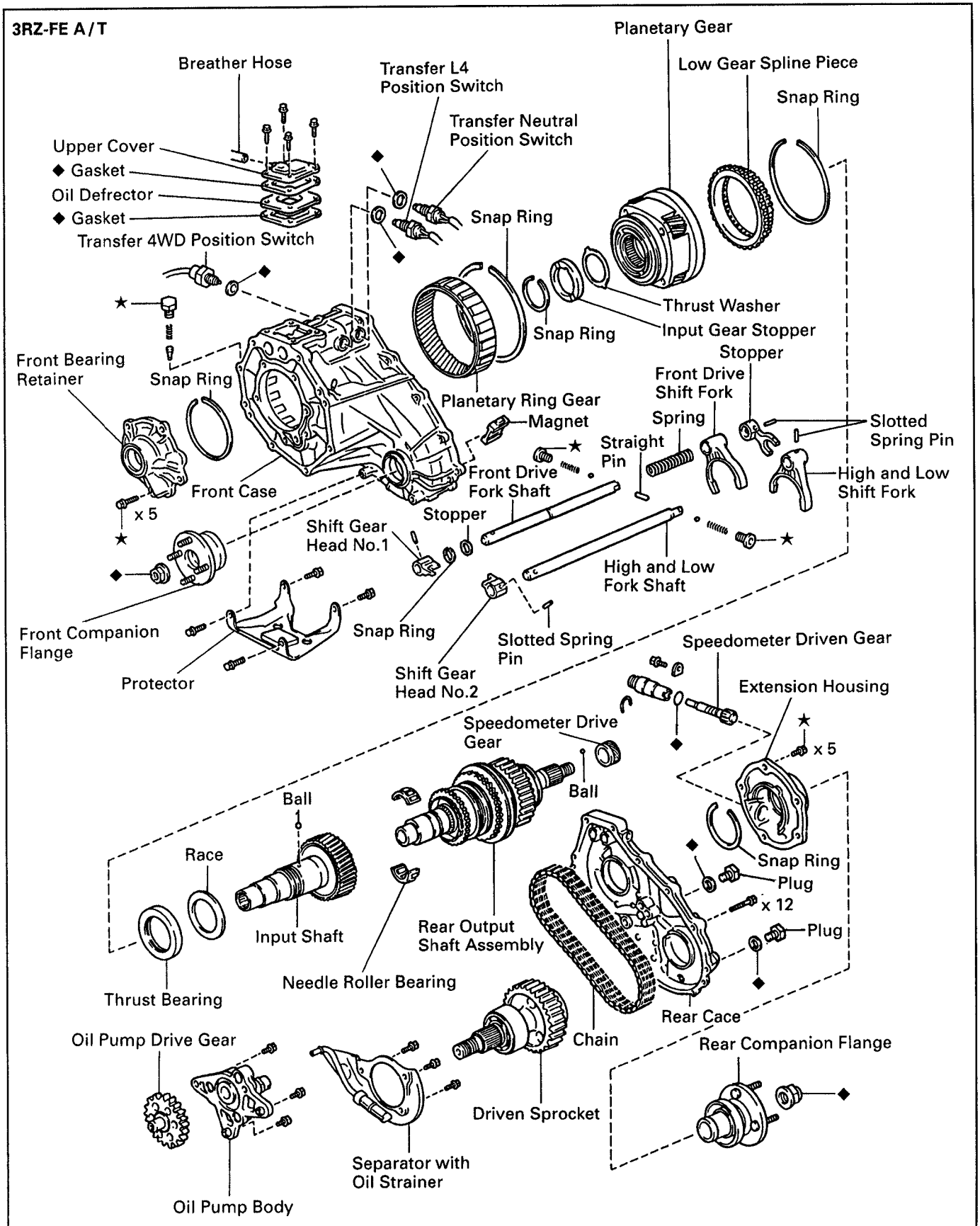

Q07452

◆ Non-reusable part

★ Precoated part

Z16685

5VZ-FE M/T, A/T
(w/ One Touch 2-4 Selector System)

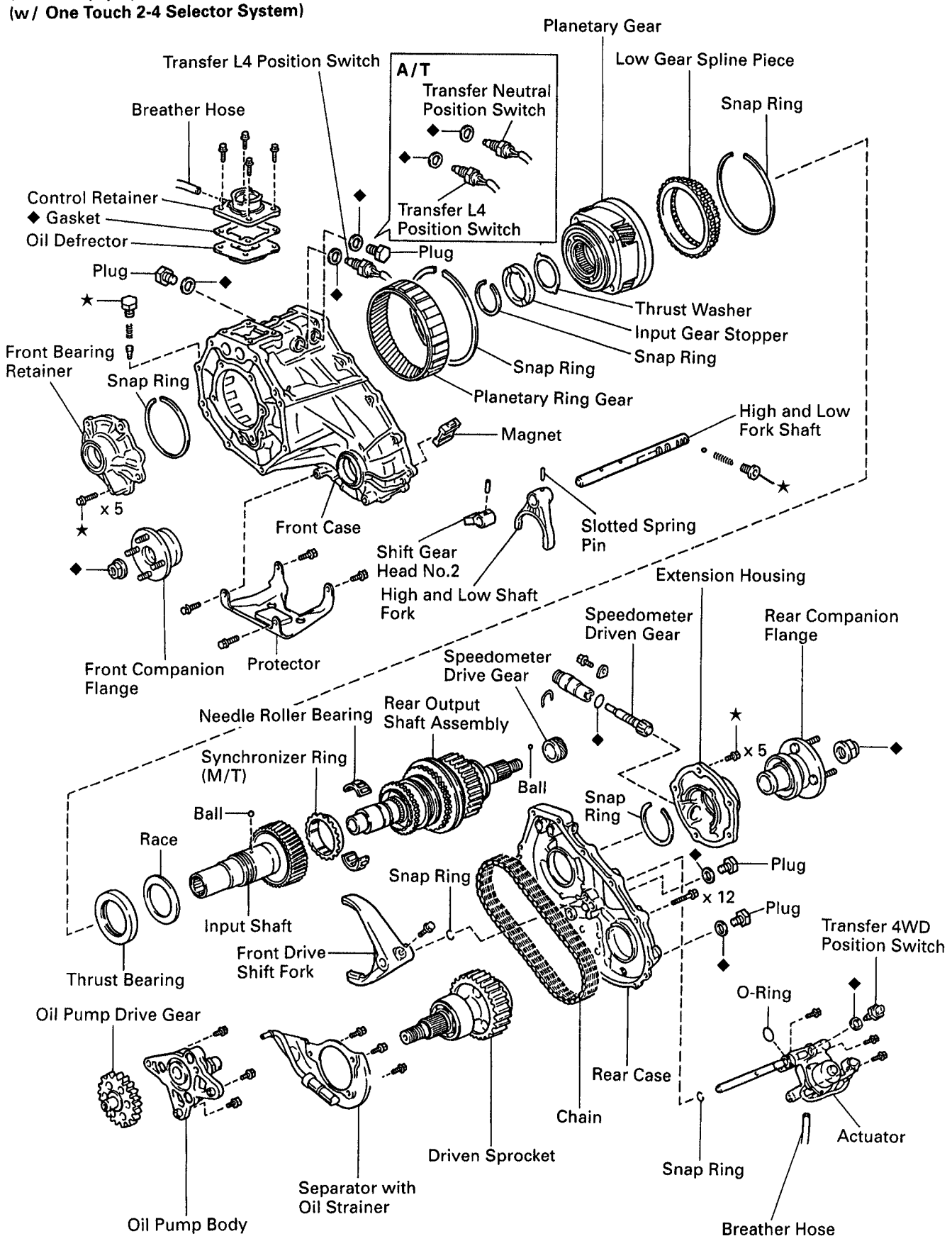

Q07453

◆ Non-reusable part
★ Precoated part

Z16686

TR05F-01

BASIC SUBASSEMBLY SEPARATION

1. **REMOVE SPEEDOMETER DRIVEN GEAR**
   Torque: 11.5 N·m (115 kgf·cm, 8 ft·lbf)
2. **w/ One touch 2–4 selector system and A/T:**
   REMOVE L4 POSITION SWITCH
   Torque: 37 N·m (380 kgf·cm, 27 ft·lbf)
3. **w/o One touch 2–4 selector system:**
   REMOVE 4WD POSITION SWITCH
   Torque: 37 N·m (380 kgf·cm, 27 ft·lbf)
4. **A/T:**
   REMOVE NEUTRAL POSITION SWITCH
   Torque: 37 N·m (380 kgf·cm, 27 ft·lbf)
5. **REMOVE PLUGS OF FRONT CASE**
   Torque: 37 N·m (380 kgf·cm, 27 ft·lbf)
   INSTALLATION HINT: Check the following items.
   - The input shaft and output shafts rotate smoothly.
   - Shifting can be made smoothly to all position.
6. **REMOVE PROTECTOR**
   Remove the 4 bolts.
   Torque: 18 N·m (185 kgf·cm, 13 ft·lbf)
7. **3RZ–FE A/T:**
   REMOVE SHIFT GEAR HEAD NO.1 AND NO.2

(a) Using a pin punch and hammer, drive out the 2 slotted spring pins.
(b) Remove the 2 shift gear heads.

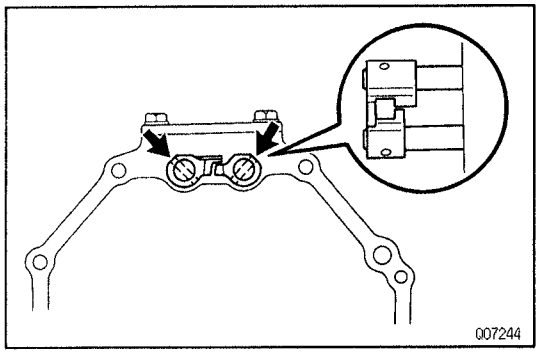

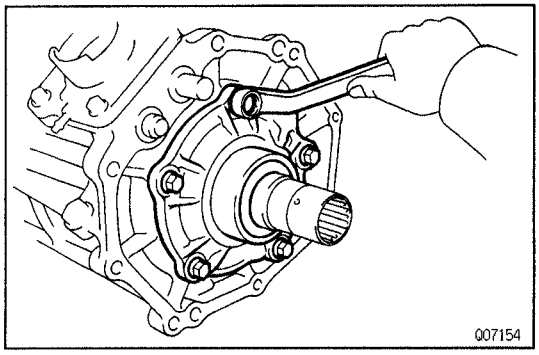

8. **REMOVE FRONT BEARING RETAINER**

(a) Remove the 5 bolts.
Torque: 11.5 N·m (115 kgf·cm, 8 ft·lbf)
INSTALLATION HINT: Apply liquid sealer to the bolts.
Sealant: Part No. 08833 – 00080, THREE BOND 1344, LOCTITE 242 or equivalent
(b) Using a plastic hammer, tap the front bearing retainer and remove it.

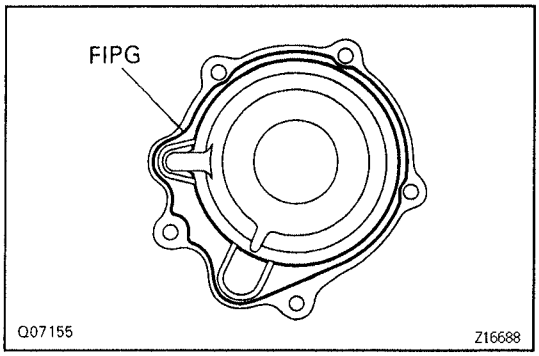

INSTALLATION HINT:
- Remove any FIPG material and be careful not to drop oil on the contacting surfaces of the front bearing retainer.
- Apply FIPG to the front bearing retainer, as shown.

FIPG: Part No. 08826–00090, THREE BOND 1281 or equivalent

9. **3RZ–FE A/T:**
REMOVE UPPER COVER AND OIL DEFLECTOR
Remove the 4 bolts and the upper cover and oil deflector.
Torque: 18 N·m (185 kgf·cm, 13 ft·lbf)
INSTALLATION HINT: Install a new gasket and oil deflector.

10. **Except 3RZ–FE A/T:**
REMOVE CONTROL RETAINER AND OIL DEFLECTOR
(a) Remove the 4 bolts and the control retainer and oil deflector.
Torque: 18 N·m (185 kgf·cm, 13 ft·lbf)
INSTALLATION HINT: Install a new gasket and control retainer.
(b) w/o One touch 2–4 selector system:
Remove the select return spring from the control retainer.

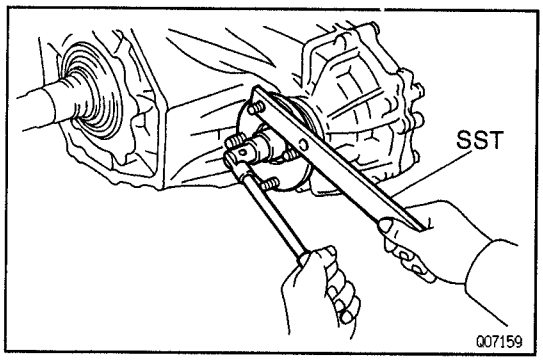

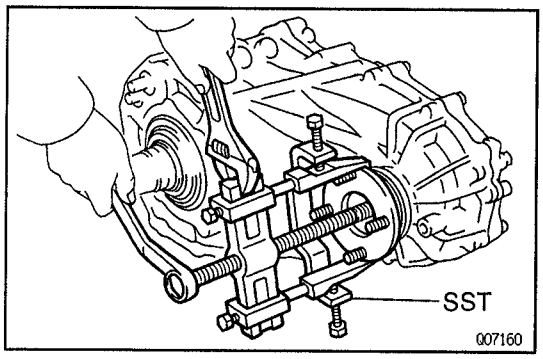

11. **REMOVE FRONT COMPANION FLANGE**
(a) Using a chisel and hammer, loosen the staked part of the nut.
INSTALLATION HINT: Stake a new lock nut.
(b) Using SST to hold the flange, remove the companion flange lock nut.
SST 09330–00021
Torque: 118 N·m (1,200 kgf·cm, 87 ft·lbf)
(c) Using SST, remove the companion flange.
SST 09950–40010 (09951–04020, 09952–04010, 09953–04030, 09954–04010, 09955–04050, 09957–04010, 09958–04010)

12. **REMOVE REAR COMPANION FLANGE**
Remove the rear companion flange in the same way as the front companion flange.
INSTALLATION HINT:
- Front companion flange bolts are slim.
- Rear companion flange bolts are thick.

13. **REMOVE EXTENSION HOUSING**
(a) Remove the 5 bolts.
Torque: 12 N·m (120 kgf·cm, 9 ft·lbf)
INSTALLATION HINT: Apply liquid sealer to the bolts.
Sealant: Part No. 08833 – 00080, THREE BOND 1344, LOCTITE 242 or equivalent
(b) Using a plastic hammer, tap the extension housing and remove it.

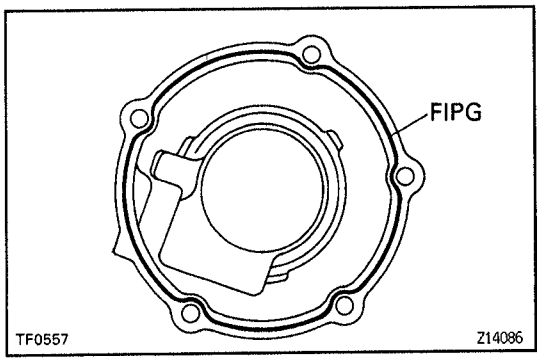

INSTALLATION HINT:

- Remove any FIPG material and be careful not to drop oil on the contacting surfaces of the extension housing.
- Apply FIPG to the extension housing, as shown.

FIPG: Part No.08826–00090, THREE BOND 1281 or equivalent

14. REMOVE SPEEDOMETER DRIVE GEAR

(a) Remove the speedometer drive gear.
INSTALLATION HINT: Make sure to install the speedometer drive gear in the correct direction.

(b) Using a magnetic finger, remove the ball from the rear output shaft.

15. SEPARATE FRONT CASE AND REAR CASE

(a) Remove the 12 bolts.
Torque: 28 N·m (285 kgf·cm, 21 ft·lbf)

(b) Using a screwdriver, separate the front case and rear case.
INSTALLATION HINT:

- Shift the high and low sleeve to low side (rear side) and assemble the front case and rear case.
- Remove any FIPG material and be careful not to drop oil on the contacting surfaces of the rear case.
- Apply FIPG to the rear case, as shown.

FIPG: Part No.08826–00090, THREE BOND 1281 or equivalent

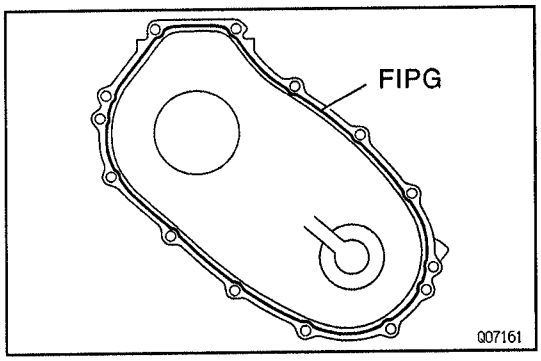

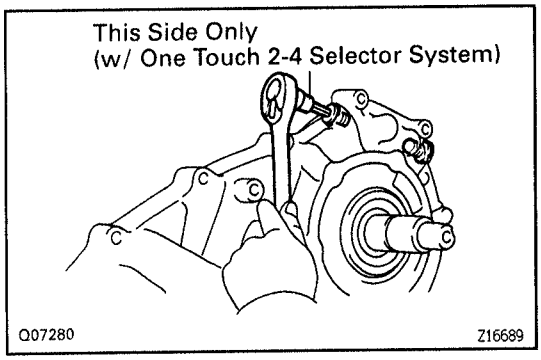

16. REMOVE STRAIGHT SCREW PLUG, SPRING AND LOCKING BALL

(a) Using a hexagon wrench, remove the screw.
Torque: 18.6 N·m (190 kgf·cm, 14 ft·lbf)
INSTALLATION HINT: Apply liquid sealer to the plugs.
Sealant: Part No. 08833 – 00080, THREE BOND 1344, LOCTITE 242 or equivalent

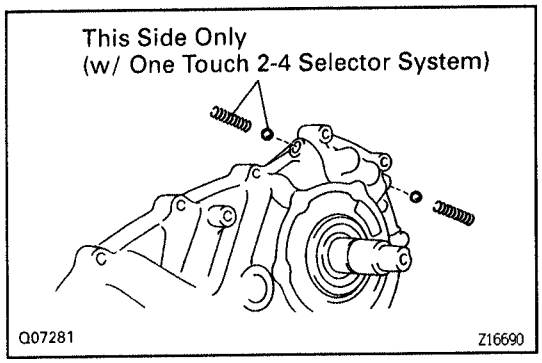

(b) Using a magnetic finger, remove the spring and ball from the both hole.

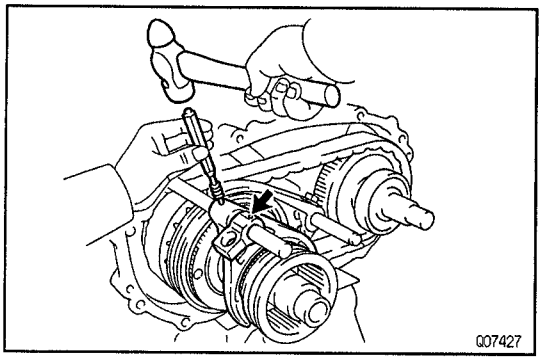

17. w/ One touch 2–4 selector system:
REMOVE HIGH AND LOW FORK SHAFT, SHIFT FORK AND SHIFT HEAD NO.2

(a) Mount the rear case in a vise.
NOTICE: Be careful not to damage the sealing surface.

(b) Using a pin punch and hammer, drive out the 2 slotted spring pins.

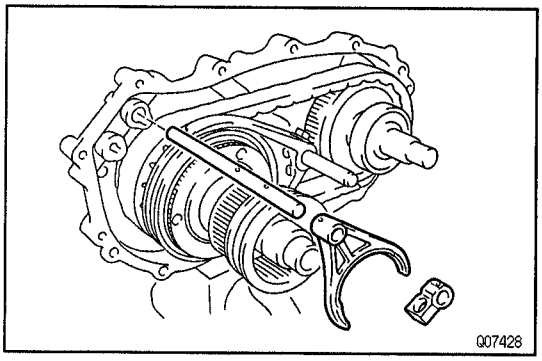

(c) Remove high and low fork shaft, shift fork and shift head No.2.
INSTALLATION HINT:
- Place the high and low shift fork into the groove of the clutch sleeve.
- Make sure to install the shift fork and shift head No.2 in the correct direction.

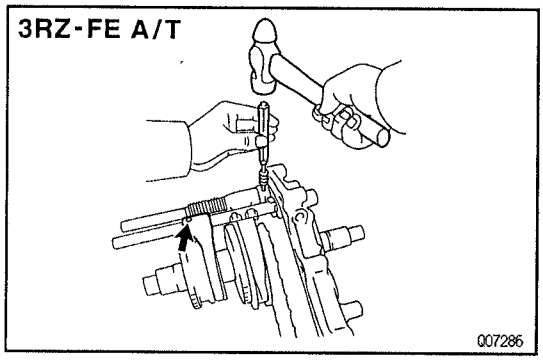

18. w/o One touch 2–4 selector system:
REMOVE FRONT DRIVE FORK SHAFT, SHIFT FORK, SPRING AND STOPPER

(a) Mount the rear case in a vise.
NOTICE: Be careful not to damage the sealing surface.

(b) Using a pin punch and hammer, drive out the 2 slotted spring pins.
HINT: When the pin is removed from the front drive fork shaft, the shaft will spring loose if the pin punch is removed, so keep the pin punch inserted in the shaft hole.

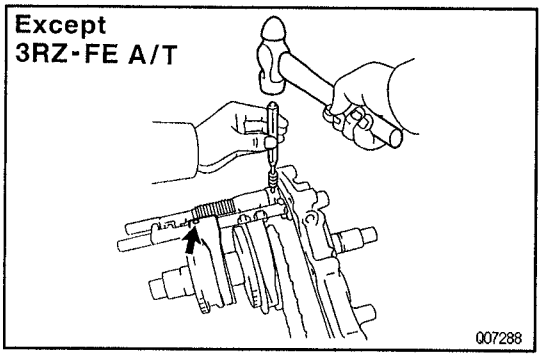

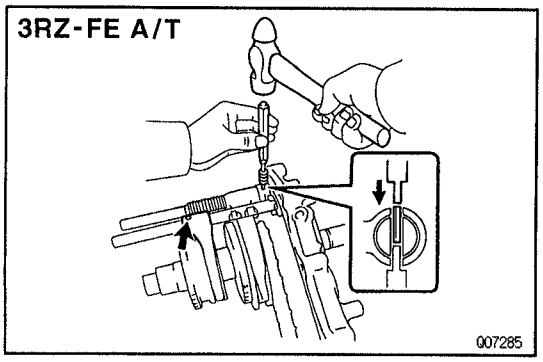

INSTALLATION HINT:
- Using a pin punch and hammer, drive in the 2 slotted spring pins.
- When installing the pin in the front drive fork shaft, push the shaft towards the rear case and install the pin while the spring is compressed.

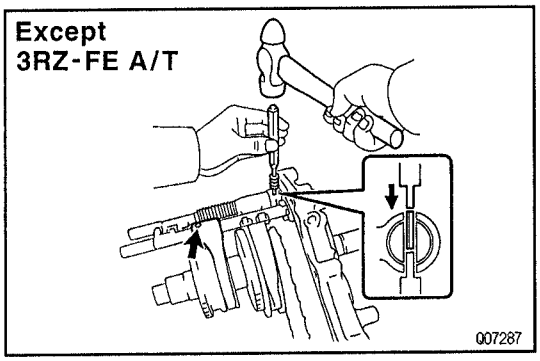

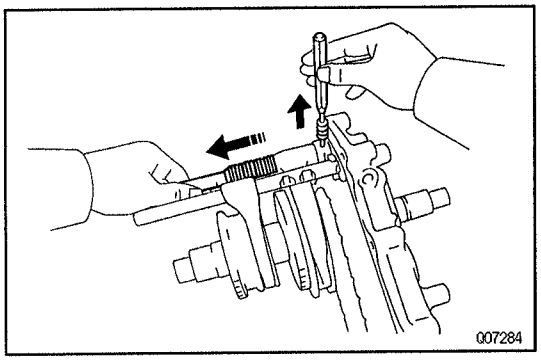

(c) Hold the front drive fork shaft in place by hand, when removing the pin punch.

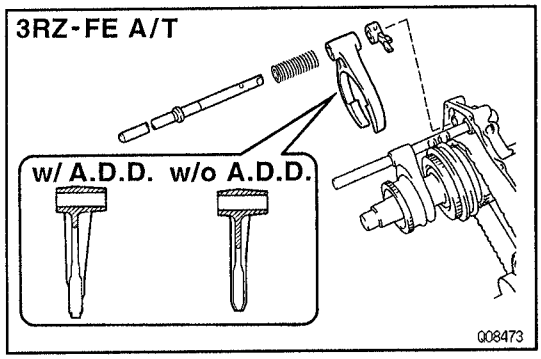

(d) Remove the front drive fork shaft, shift fork, spring and stopper.
INSTALLATION HINT:
- Place the front drive shift fork into the groove of the clutch sleeve.
- Make sure to install the shift fork and stopper in the correct direction.

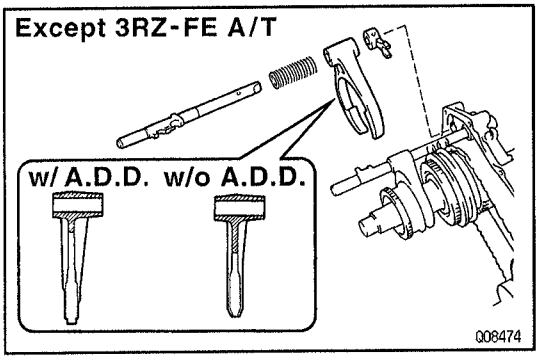

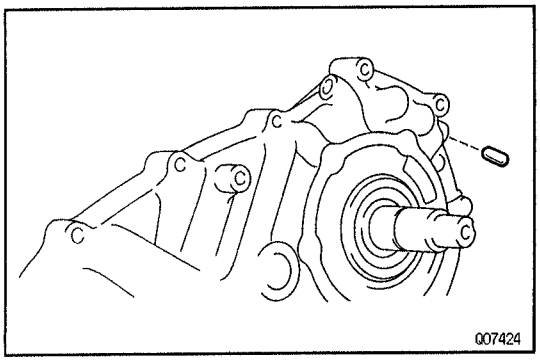

(e) w/o One touch 2–4 selector system:
Using a magnetic finger, remove the straight pin.
INSTALLATION HINT: Apply gear oil to the straight pin and insert it into the case hole.

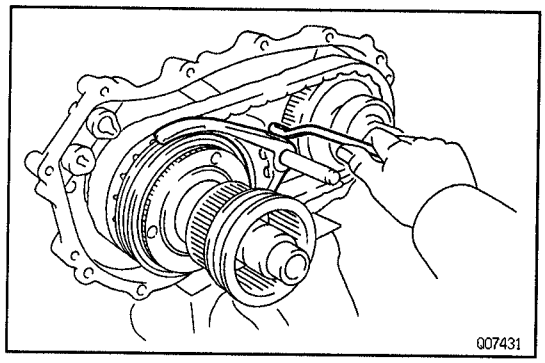

19. **w/ One touch 2–4 selector system:**
REMOVE REAR OUTPUT SHAFT, DRIVEN SPROCKET, CHAIN AND FRONT DRIVE SHIFT FORK

(a) Remove the shift fork bolt.
Torque: 24 N·m (240 kgf·cm, 17 ft·lbf)

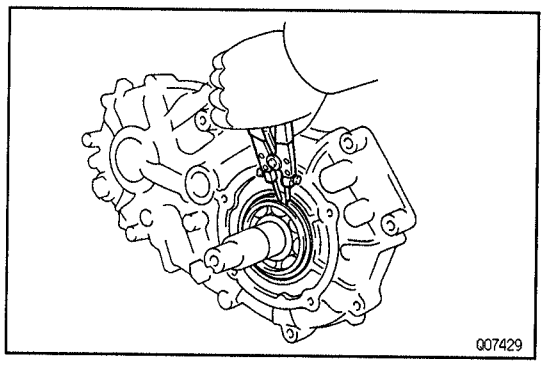

(b) Using a snap ring expander, remove the snap ring.

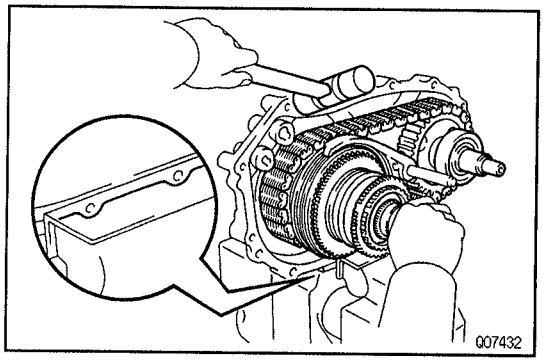

(c) Using a plastic hammer, tap the rear case with pulling the rear output shaft, driven sprocket and front drive shift fork.
INSTALLATION HINT:
- Place the front drive shift fork into the groove of the clutch sleeve.
- Make sure to install the shift fork in the correct direction.
- If necessary, heat the rear case to about 50 – 80 °C (122 – 176 °F).

(d) Remove the chain.

3RZ-FE A/T

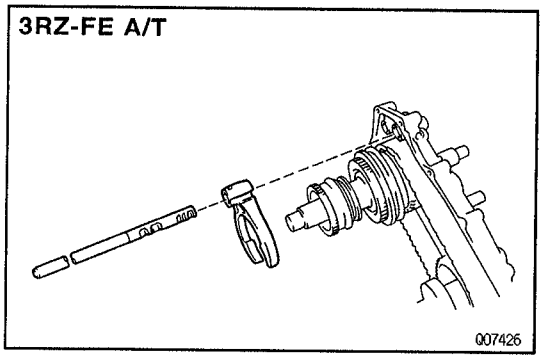

20. **w/o One touch 2–4 selector system:**
REMOVE HIGH AND LOW FORK SHAFT AND SHIFT FORK
INSTALLATION HINT:
- Place the high and low shift fork into the groove of the clutch sleeve.
- Make sure to install the shift fork in the correct direction.

Except 3RZ-FE A/T

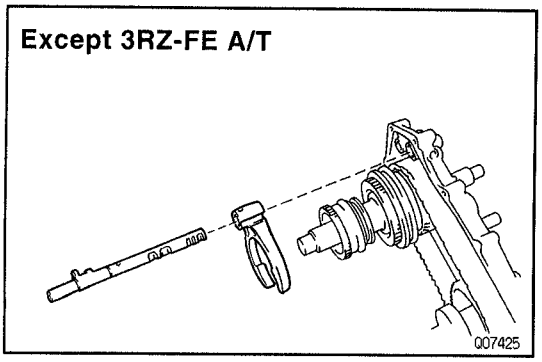

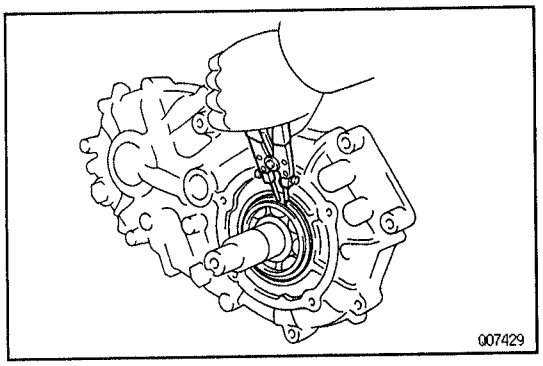

21. w/o One touch 2–4 selector system:
REMOVE REAR OUTPUT SHAFT, DRIVEN SPROCKET AND CHAIN

(a) Using a snap ring expander, remove the snap ring.

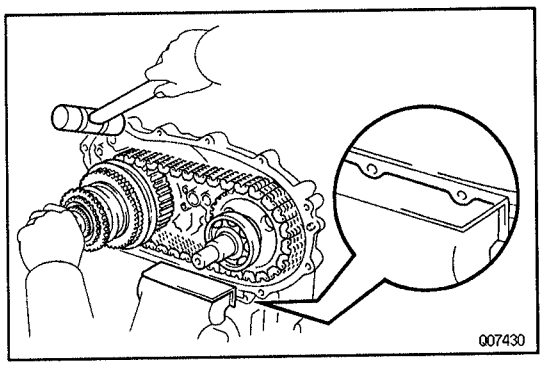

(b) Using a plastic hammer, tap the rear case with pulling the rear output shaft and driven sprocket.
INSTALLATION HINT: If necessary, heat the rear case to about 50 – 80 °C (122 – 176 °F).

(c) Remove the chain.

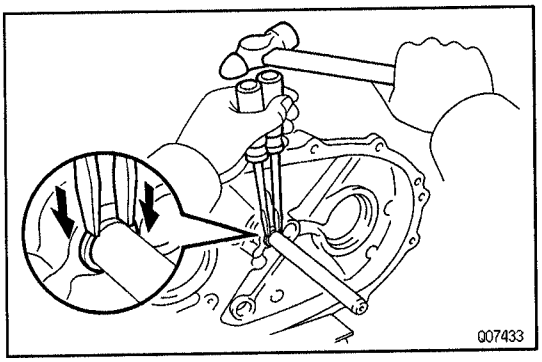

22. w/ One touch 2–4 selector system:
REMOVE ACTUATOR ASSEMBLY

(a) Using 2 screwdrivers and a hammer, remove the snap ring.

(b) Remove the 3 bolts and the actuator assembly.
Torque: 20 N·m (200 kgf·cm, 14 ft·lbf)

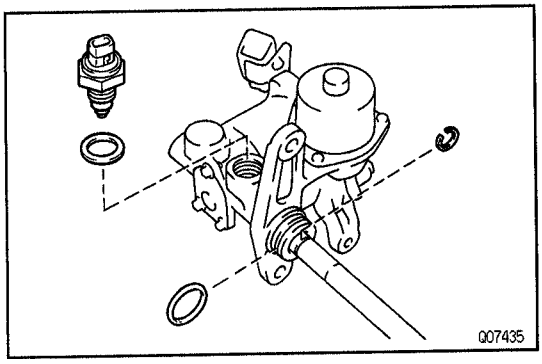

(c) Remove the O–ring, 4WD position switch and snap ring from the actuator assembly.
Torque: 37 N·m (380 kgf·cm, 27 ft·lbf)
INSTALLATION HINT: Coat a new O–ring with gear oil and install it to the actuator assembly.

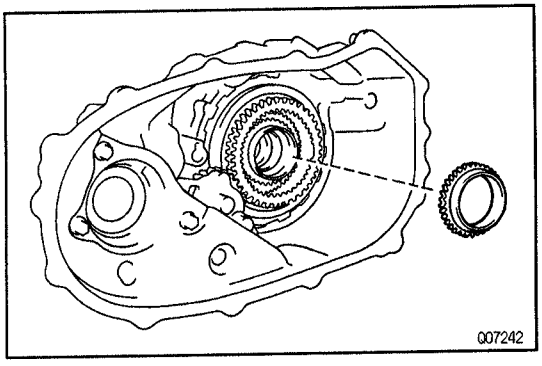

23. M/T:
REMOVE SYNCHRONIZER RING FROM INPUT SHAFT
INSTALLATION HINT:
- Apply MP grease to the synchronizer ring.
- Align the synchronizer ring slots with the shifting keys, and install it on the high and low clutch hub.

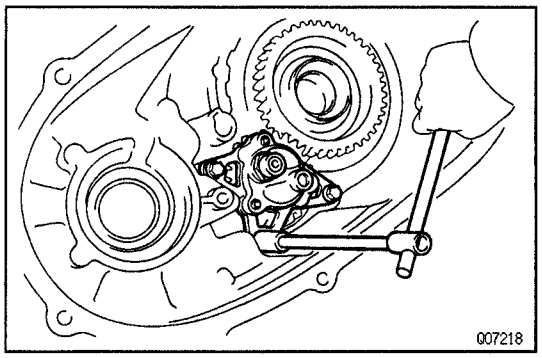

24. REMOVE SEPARATOR WITH OIL STRAINER AND MAGNET

Remove the 3 bolts and the separator with the oil strainer and magnet.

Torque: 7.5 N·m (80 kgf·cm, 69 in.lbf)

25. REMOVE OIL PUMP BODY ASSEMBLY

Remove the 3 bolts and the oil pump body assembly.

Torque: 7.5 N·m (80 kgf·cm, 69 in.lbf)

26. REMOVE OIL PUMP DRIVE GEAR

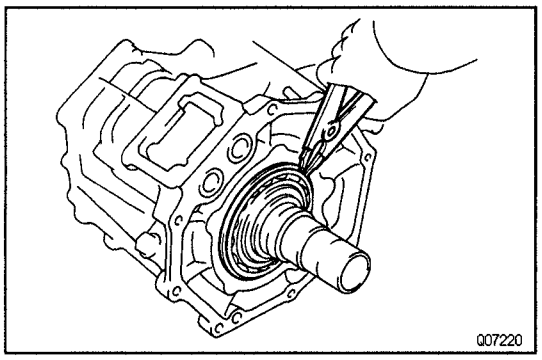

27. REMOVE PLANETARY GEAR ASSEMBLY WITH INPUT SHAFT

(a) Using a snap ring expander, remove the snap ring.

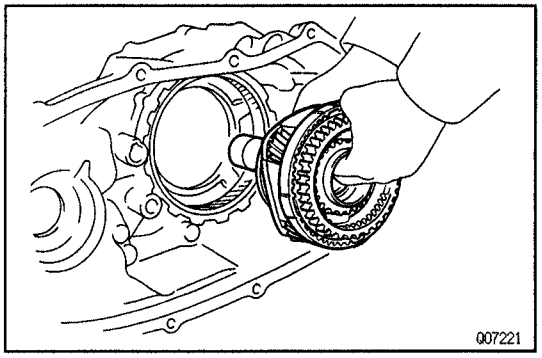

(b) Pull out the planetary gear assembly with the input shaft.

INSTALLATION HINT: If necessary, heat the front case to about 50 – 80 °C (122 – 176 °F).

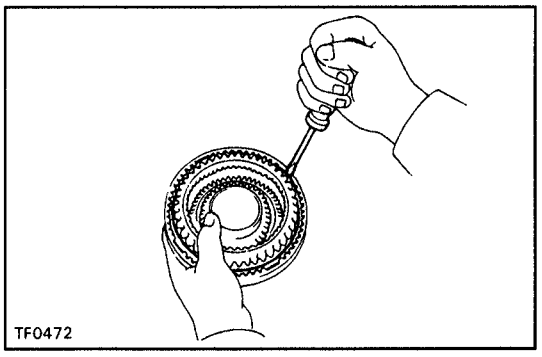

28. REMOVE LOW GEAR SPLINE PIECE

(a) Using a screwdriver, remove the snap ring.

INSTALLATION HINT: Be sure the end gap of the snap ring is not aligned with cutout portion of the planetary carrier.

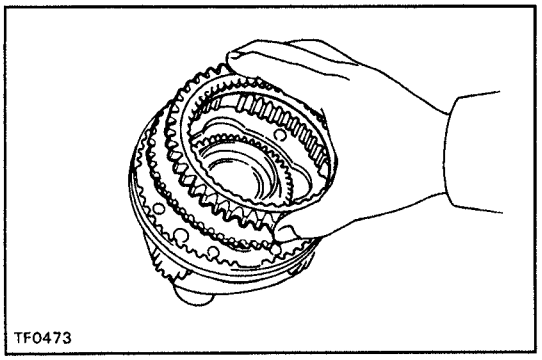

(b) Remove the low gear spline piece.

TR

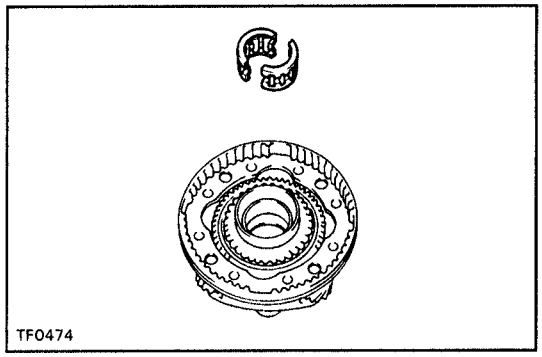
TF0474

29. REMOVE NEEDLE ROLLER BEARING FROM INPUT SHAFT

INSTALLATION HINT: Apply gear oil to the needle roller bearing.

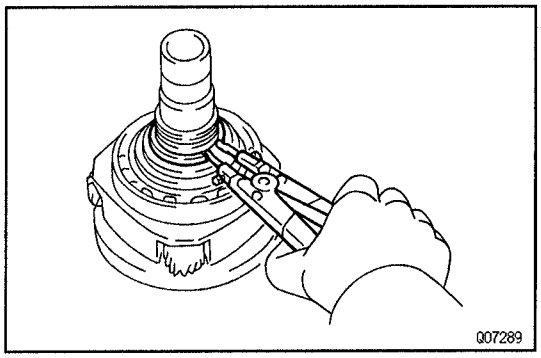
Q07289

30. REMOVE INPUT SHAFT STOPPER AND THRUST BEARING

(a) Using a snap ring expander, remove the snap ring.

INSTALLATION HINT: Select a snap ring that will allow 0.05–0.15 mm (0.0020–0.0059 in.) axial play.

Mark	Thickness mm (in.)
A	2.10 – 2.15 (0.0827 – 0.0846)
B	2.15 – 2.20 (0.0846 – 0.0866)
C	2.20 – 2.25 (0.0866 – 0.0886)
D	2.25 – 2.30 (0.0886 – 0.0906)
E	2.30 – 2.35 (0.0906 – 0.0925)
F	2.35 – 2.40 (0.0925 – 0.0945)
G	2.40 – 2.45 (0.0945 – 0.0965)
H	2.45 – 2.50 (0.0965 – 0.0984)
J	2.50 – 2.55 (0.0984 – 0.1004)
K	2.55 – 2.60 (0.1004 – 0.1024)
L	2.60 – 2.65 (0.1024 – 0.1043)
M	2.65 – 2.70 (0.1043 – 0.1063)
N	2.70 – 2.75 (0.1063 – 0.1083)
P	2.75 – 2.80 (0.1083 – 0.1102)
Q	2.80 – 2.85 (0.1102 – 0.1122)
R	2.85 – 2.90 (0.1122 – 0.1142)
S	2.90 – 2.95 (0.1142 – 0.1161)
T	2.95 – 3.00 (0.1161 – 0.1181)
U	3.00 – 3.05 (0.1181 – 0.1201)

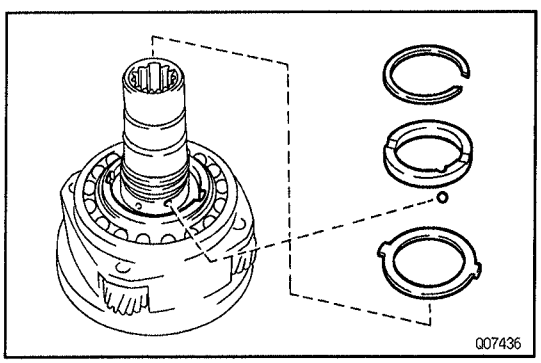
Q07436

(b) Remove the input gear stopper, thrust washer and ball.

INSTALLATION HINT: Apply gear oil to the input gear stopper and thrust washer.

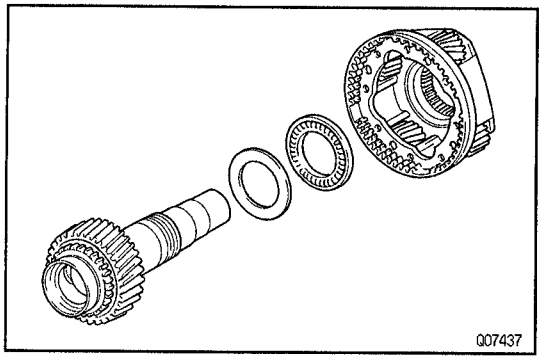

31. REMOVE INPUT SHAFT, THRUST NEEDLE ROLLER BEARING AND THRUST RACE

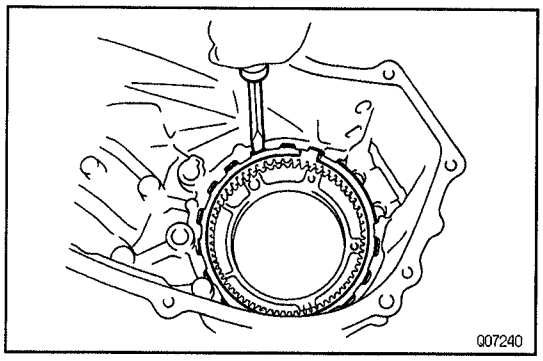

32. REMOVE PLANETARY RING GEAR

(a) Using a screwdriver, remove the snap ring.
INSTALLATION HINT: Be sure the end gap of the snap ring is not aligned with the upper side of the case.

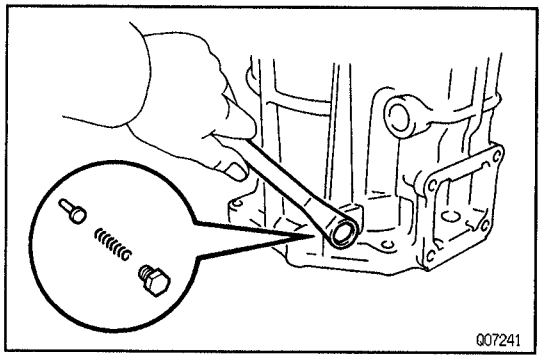

(b) Remove the plug, spring and pin.
Torque: 18.6 N·m (190 kgf·cm, 14 ft·lbf)
INSTALLATION HINT: Apply liquid sealer to the plug.
Sealant: Part No. 08833 – 00080, THREE BOND 1344, LOCTITE 242 or equivalent

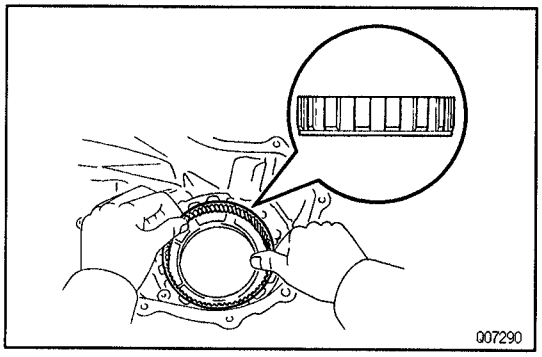

(c) Remove the planetary ring gear.
INSTALLATION HINT: Make sure to install the ring gear in the correct direction.

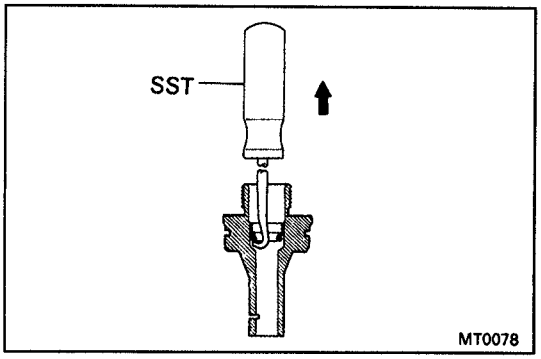

33. IF NECESSARY, REPLACE SPEEDOMETER DRIVEN GEAR OIL SEAL

(a) Using SST, remove the oil seal.
SST 09921–00010

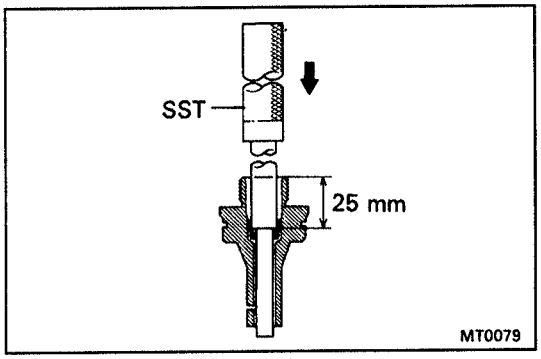

(b) Coat the lip of oil seal with MP grease.
(c) Using SST, drive in a new oil seal.
SST 09201 – 10000 (09201 – 01080),
09950 – 70010 (09951 – 07150)
Drive in depth: 25 mm (0.98 in.)

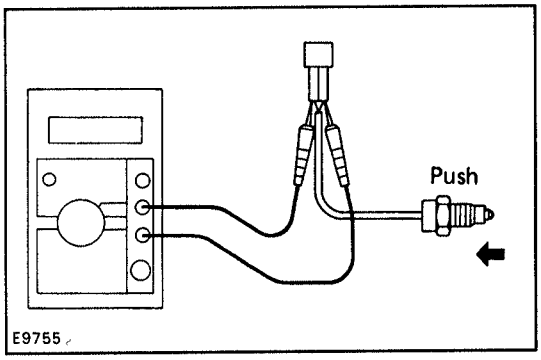

34. INSPECT SWITCHES

Check that there is continuity between terminals as shown.

Switch Position	Specified Condition
Push	Continuity
Free	No continuity

If operation is not as specified, replace the switch.

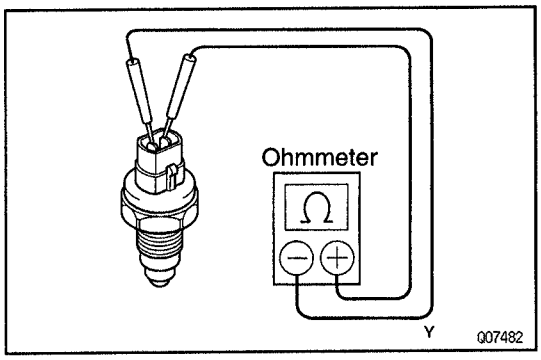

OIL PUMP BODY
COMPONENTS

TR00V–06

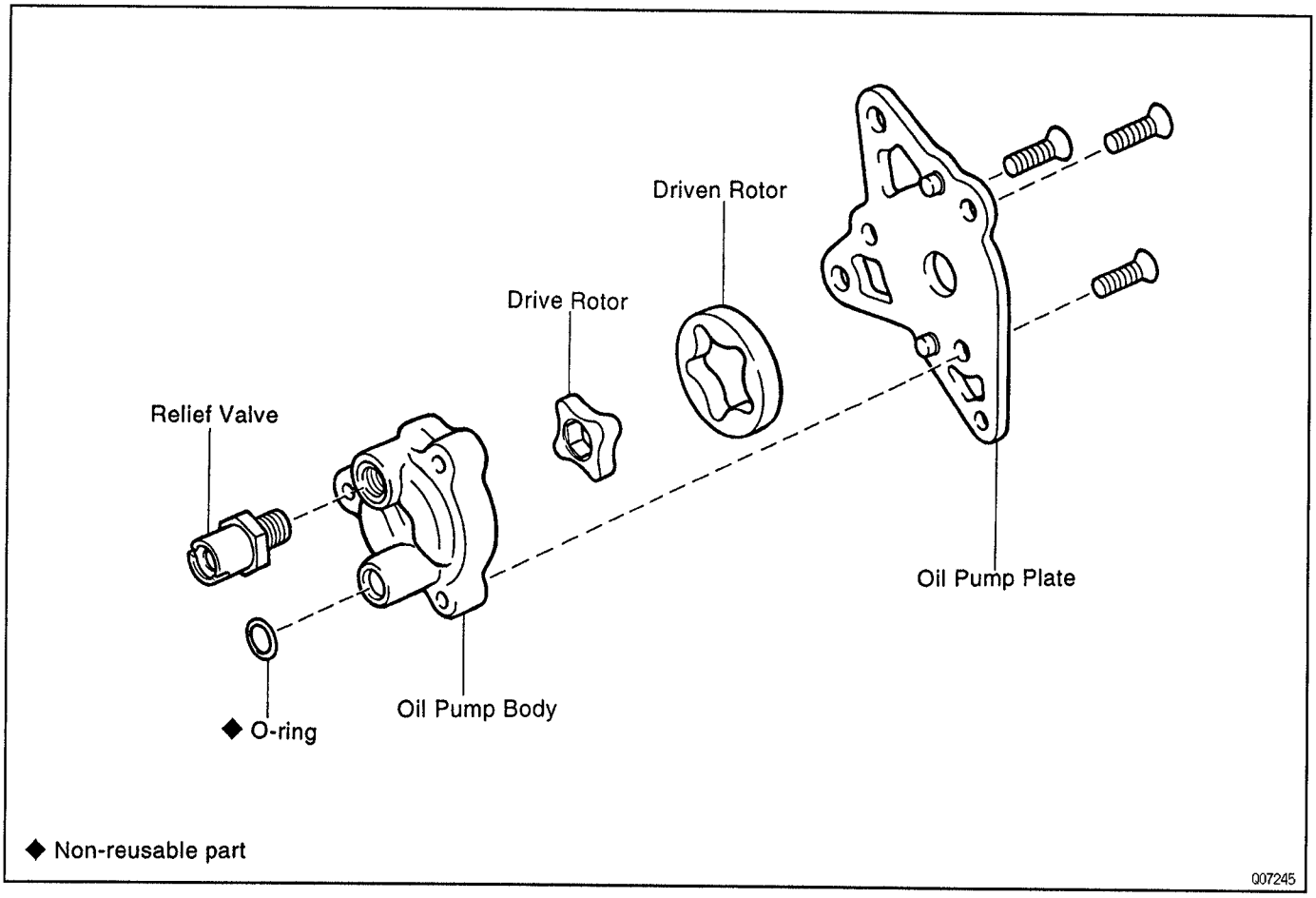

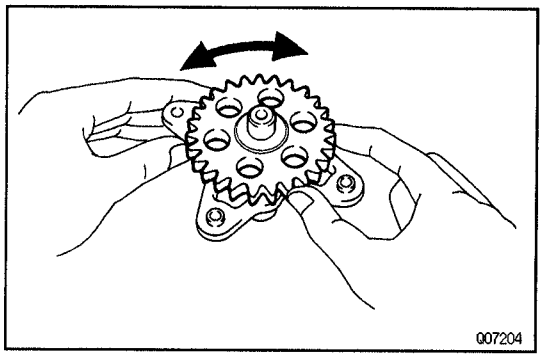

OIL PUMP BODY DISASSEMBLY

TR04G–02

1. CHECK OIL PUMP OPERATION

Install the oil pump drive gear to the drive rotor, check that the drive rotor turns smoothly.

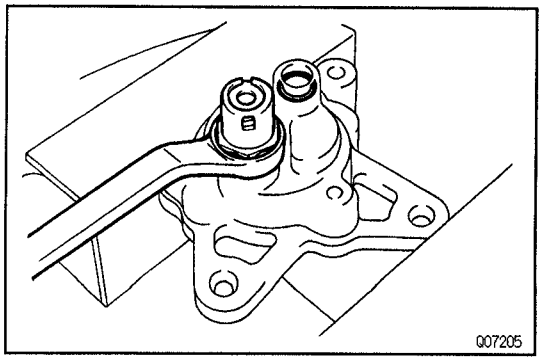

2. REMOVE RELIEF VALVE AND O–RING

(a) Mount the oil pump plate in a vise.

(b) Remove the relief valve and O–ring from the oil pump body.

Torque: 29.4 N·m (300 kgf·cm, 21 ft·lbf)

INSTALLATION HINT: Coat a new O–ring with gear oil and install it to the oil pump body.

TR

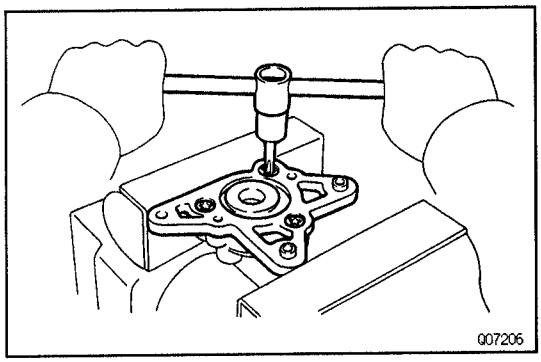

3. REMOVE OIL PUMP PLATE

(a) Using a torx socket wrench, unscrew the 3 torx screws.
(Torx socket wrench T30 09042–00010).
Torque: 7.4 N·m (75 kgf·cm, 65 in.lbf)

(b) Remove the oil pump plate.

4. REMOVE DRIVE ROTOR AND DRIVEN ROTOR

INSTALLATION HINT: Apply gear oil to the both rotors.

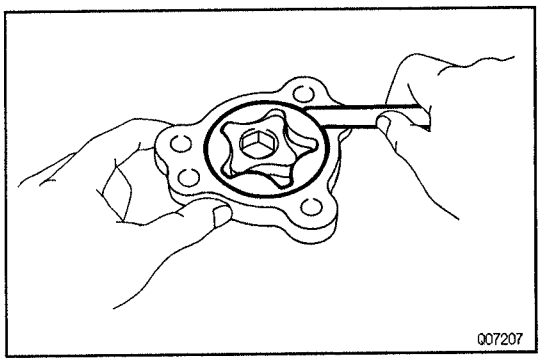

TR00X–0A

OIL PUMP BODY INSPECTION

1. INSPECT DRIVEN ROTOR BODY CLEARANCE

Push the driven rotor to one side of the body.
Using a feeler gauge, measure the clearance.
Standard clearance:
0.09 – 0.16 mm (0.0035 – 0.0063 in.)
Maximum clearance:
0.16 mm (0.0063 in.)
If the clearance exceeds the maximum, replace the drive rotor, driven rotor or pump body.

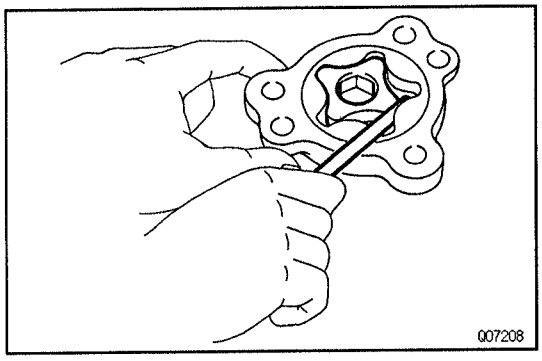

2. INSPECT BOTH ROTOR TIPS CLEARANCE

Using a feeler gauge, measure the clearance between both rotor tips.
Standard clearance:
0.05 – 0.15 mm (0.0020 – 0.0059 in.)
Maximum clearance:
0.15 mm (0.0059 in.)
If the clearance exceeds the maximum, replace the drive rotor, driven rotor or pump body.

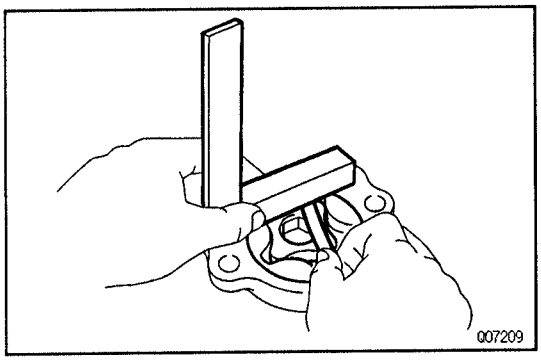

3. INSPECT BOTH ROTORS SIDE CLEARANCE

Using a steel straight edge and feeler gauge, measure the clearance between the rotors and straight edge.
Standard clearance:
0.03 – 0.10 mm (0.0012 – 0.0039 in.)
Maximum clearance:
0.10 mm (0.0039 in.)
If the clearance exceeds the maximum, replace the drive rotor, driven rotor or pump body.

TR05G–01

OIL PUMP BODY ASSEMBLY

Assembly is in the reverse order of disassembly.

DRIVEN SPROCKET
COMPONENTS

TR00Z–07

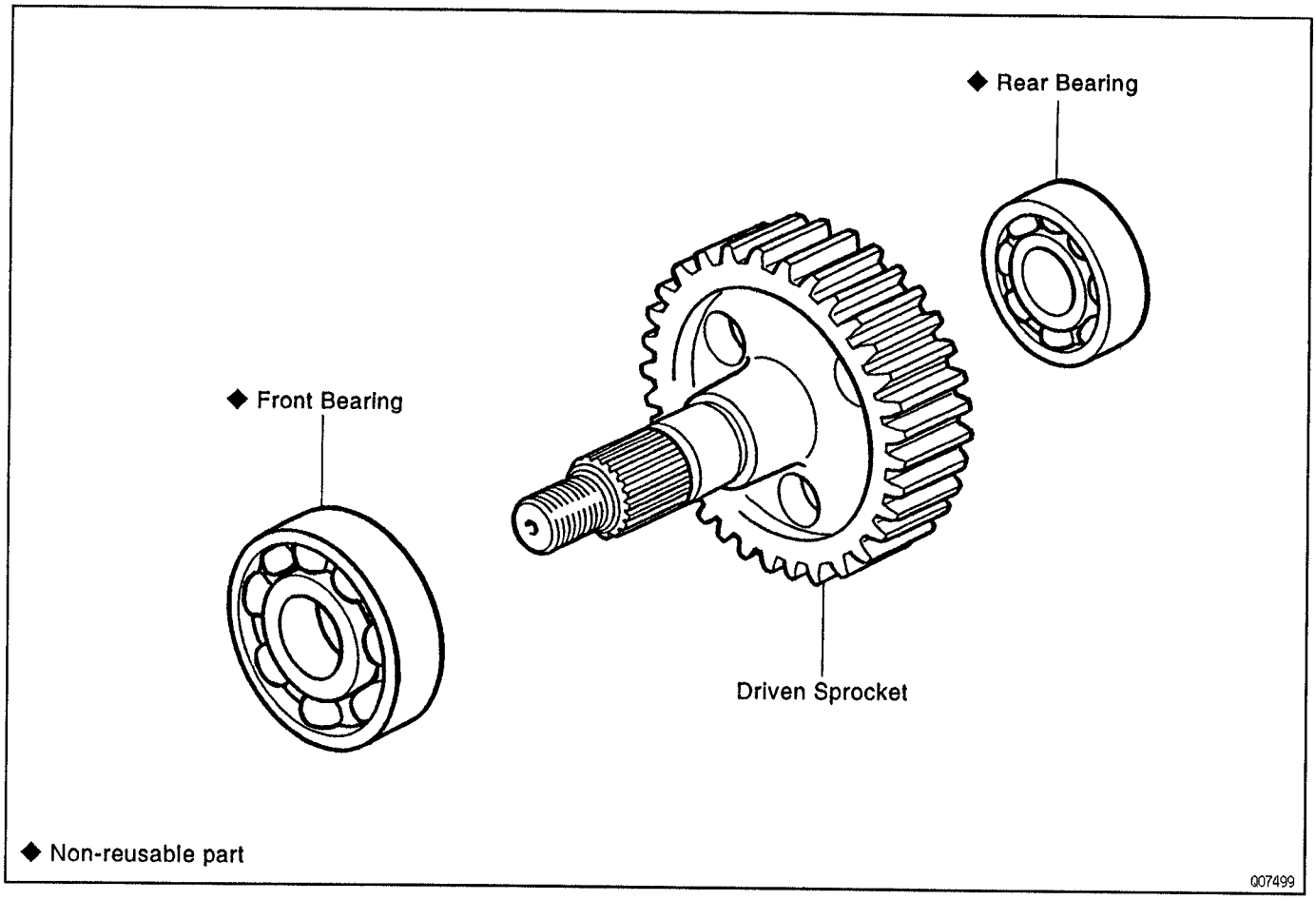

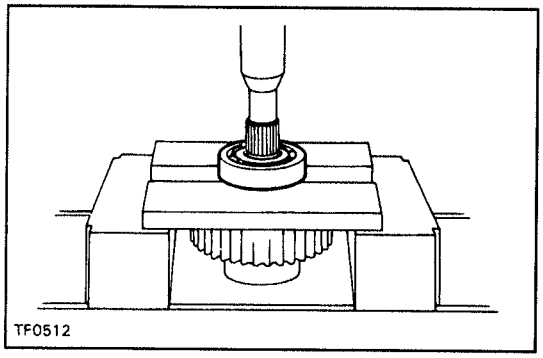

DRIVEN SPROCKET DISASSEMBLY

TR010–06

1. **REMOVE FRONT BEARING**
   Using a press, remove the front bearing.

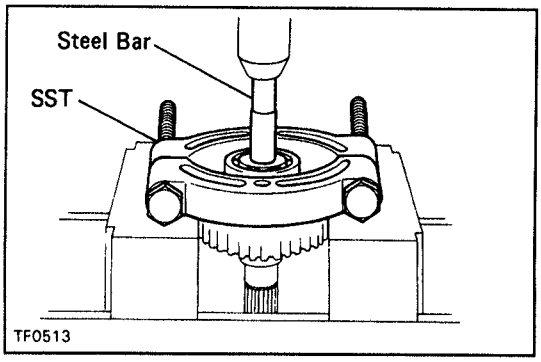

2. **REMOVE REAR BEARING**
   Using SST and a press, remove the rear bearing.
   SST 09555–55010

TR011-07

DRIVEN SPROCKET ASSEMBLY

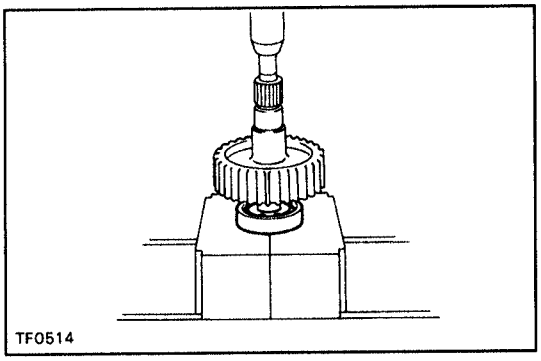
TF0514

1. INSTALL REAR BEARING

Using a press, install a new rear bearing.

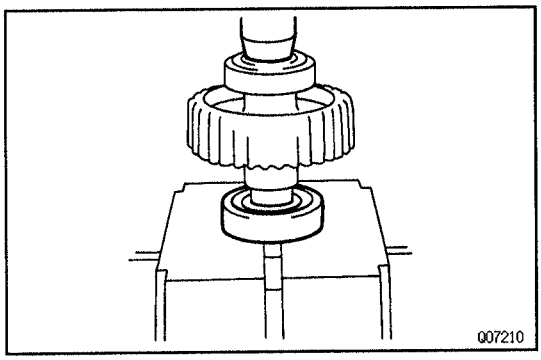
Q07210

2. INSTALL FRONT BEARING

Using a press, install a new front bearing.

REAR OUTPUT SHAFT
COMPONENTS

TR04H–02

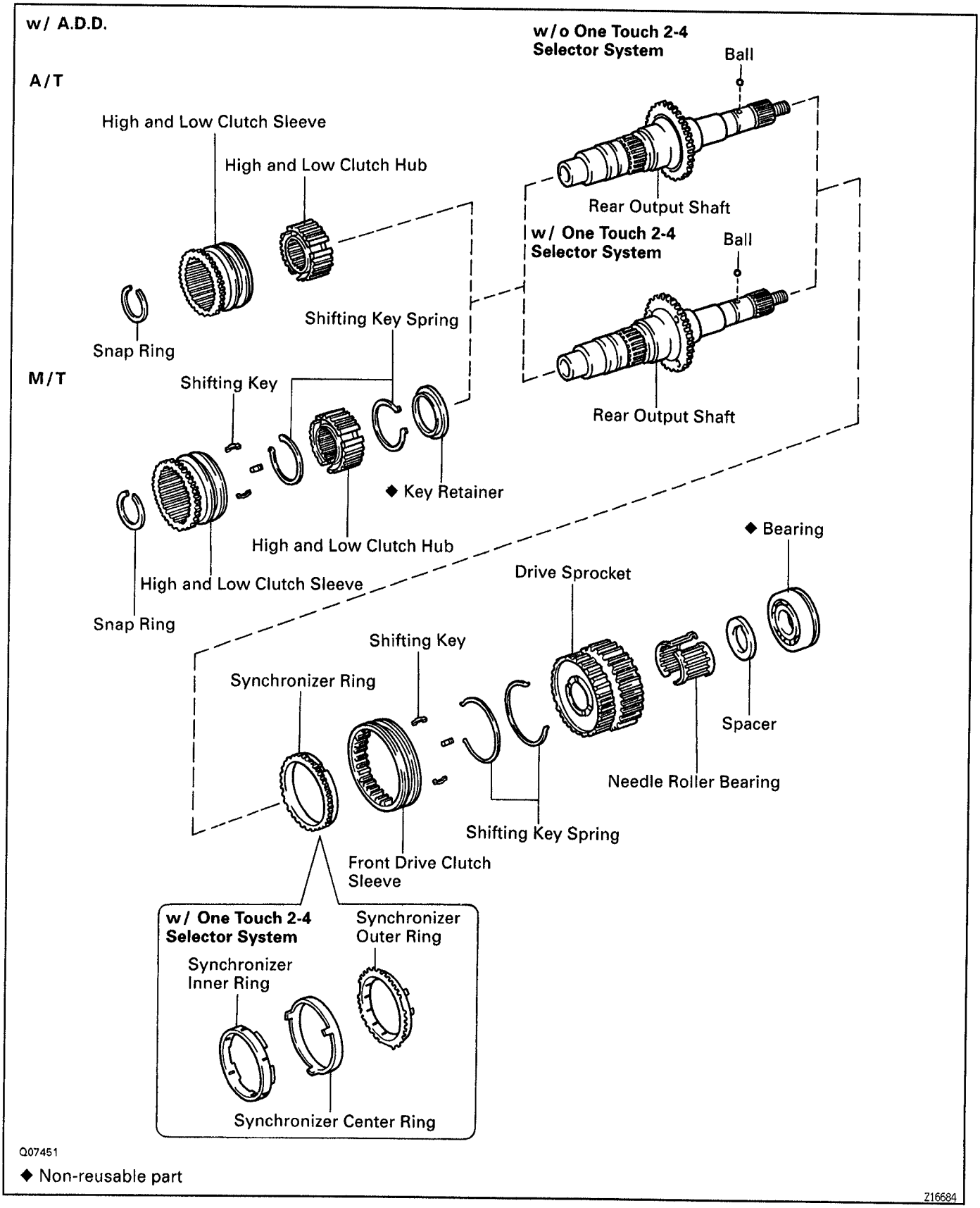

w/o A.D.D.

A/T

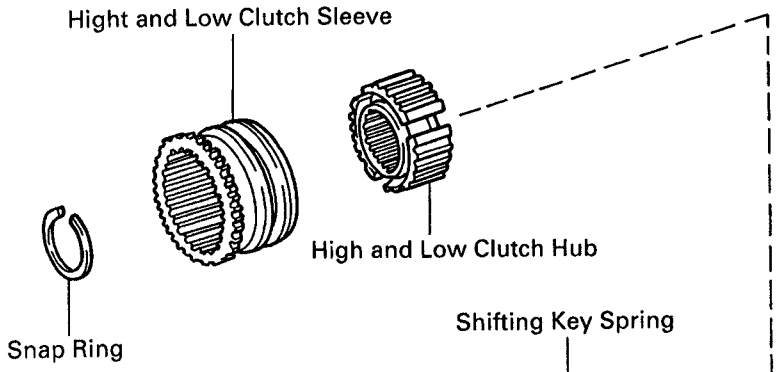

M/T

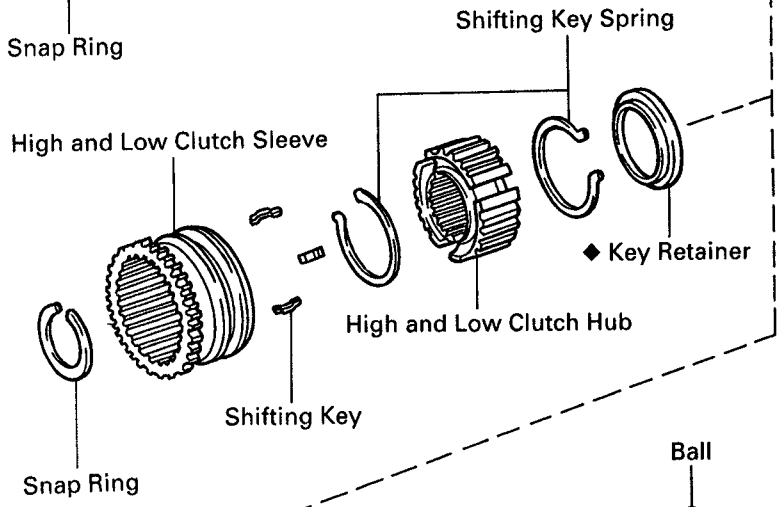

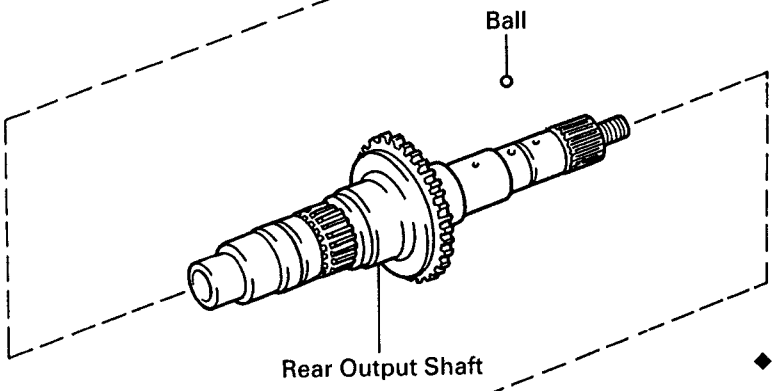

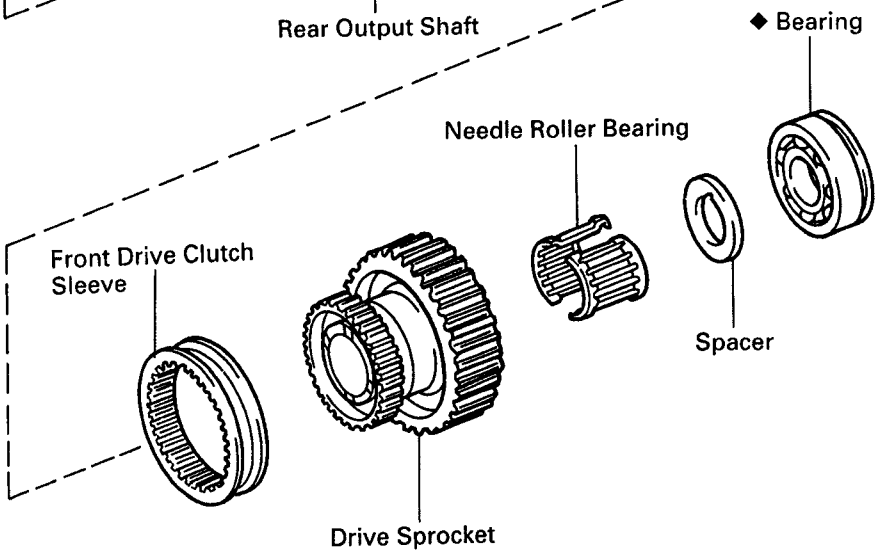

Q07454

◆ Non-reusable part

Z16687

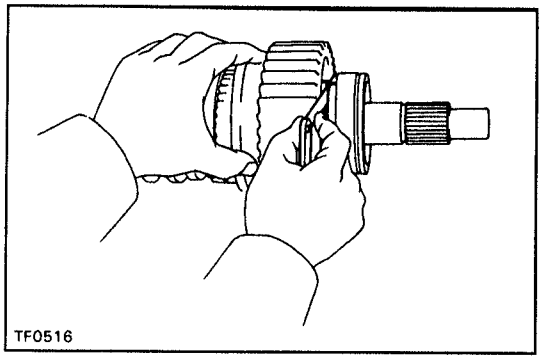
TF0516

REAR OUTPUT SHAFT DISASSEMBLY TR04J-02

1. **INSPECT DRIVE SPROCKET THRUST CLEARANCE**
Using a feeler gauge, measure the drive sprocket thrust clearance.
Standard clearance:
0.10 – 0.25 mm (0.0039 – 0.0098 in.)
Maximum clearance:
0.25 mm (0.0098 in.)
If the clearance exceeds the maximum, replace the drive sprocket.

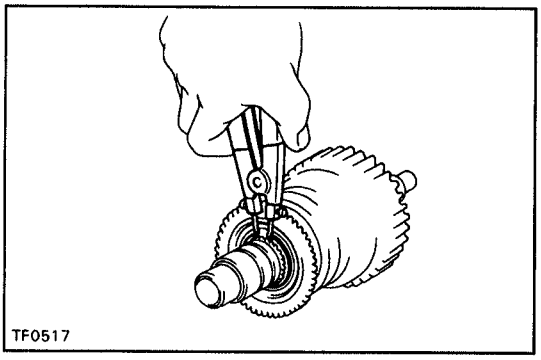
TF0517

2. **M/T:**
REMOVE HIGH AND LOW CLUTCH SLEEVE ASSEMBLY
(a) Using a snap ring expander, remove the snap ring.
(b) Remove the clutch sleeve and shifting keys.
(c) Using a press, remove the clutch hub, key springs and key retainer.

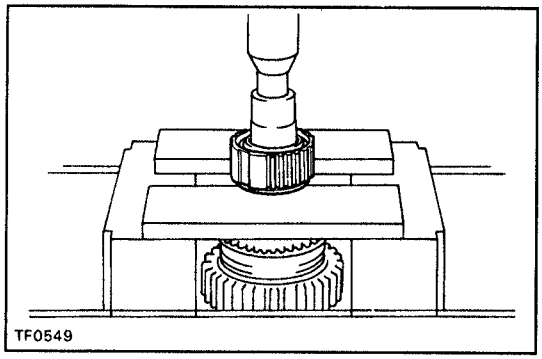
TF0549

3. **A/T:**
REMOVE HIGH AND LOW CLUTCH SLEEVE ASSEMBLY
(a) Using a snap ring expander, remove the snap ring.
(b) Remove the clutch sleeve.
(c) Using a press, remove the clutch hub.

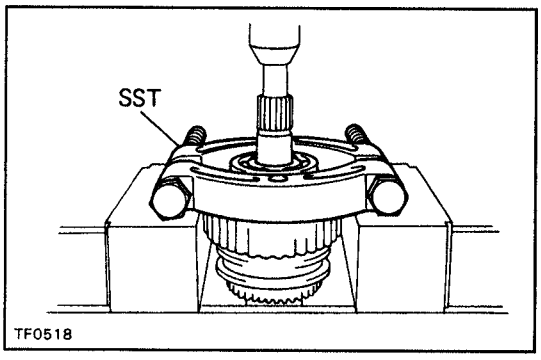

TF0518

4. **w/ A.D.D.:**
REMOVE BEARING, SPACER AND DRIVE SPROCKET WITH FRONT DRIVE CLUTCH SLEEVE ASSEMBLY
(a) Using SST and a press, remove the bearing.
SST 09555–55010

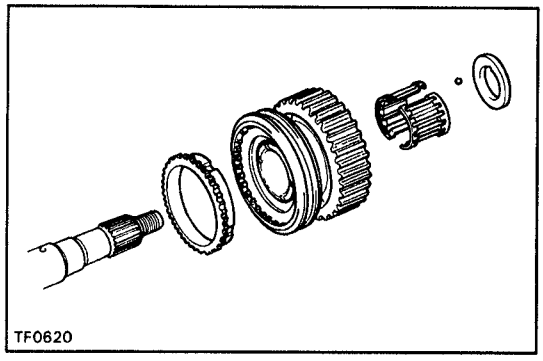
TF0620

(b) w/o One touch 2–4 selector system:
Remove these parts.
- Spacer and ball
- Drive sprocket with front drive clutch sleeve assembly
- Needle roller bearing
- Synchronizer ring

TR

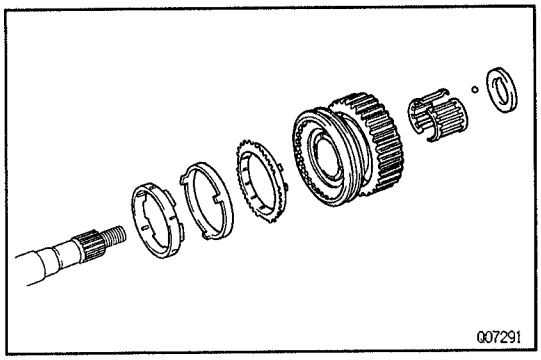

w/ One touch 2–4 selector system:
Remove these parts.
- Spacer and ball
- Drive sprocket with front drive clutch sleeve assembly
- Needle roller bearing
- Synchronizer outer ring, center ring and inner ring

(c) Remove the front drive clutch sleeve assembly from the drive sprocket.

5. w/o A.D.D.:
REMOVE BEARING, SPACER AND DRIVE SPROCKET WITH FRONT DRIVE CLUTCH SLEEVE

(a) Using SST and a press, remove the bearing.
SST 09555–55010

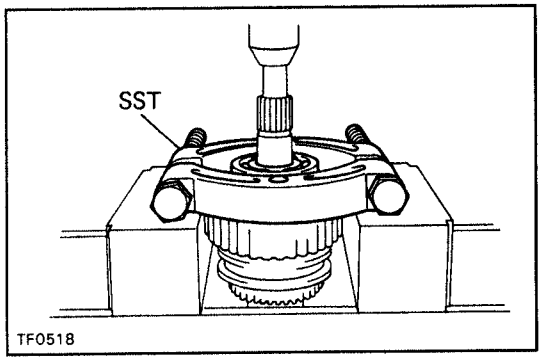

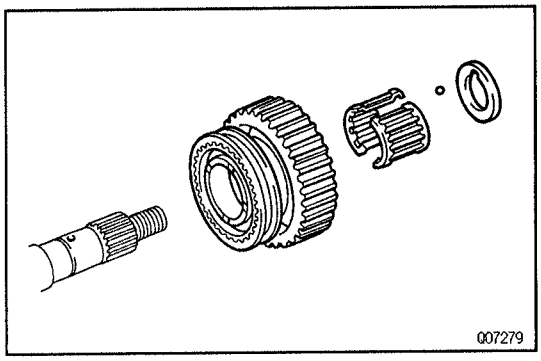

(b) Remove these parts.
- Spacer and ball
- Drive sprocket with front drive clutch sleeve
- Needle roller bearing

(c) Remove the front drive clutch sleeve from the drive sprocket.

6. w/ A.D.D.:
REMOVE SHIFTING KEYS AND KEY SPRINGS FROM FRONT DRIVE CLUTCH SLEEVE

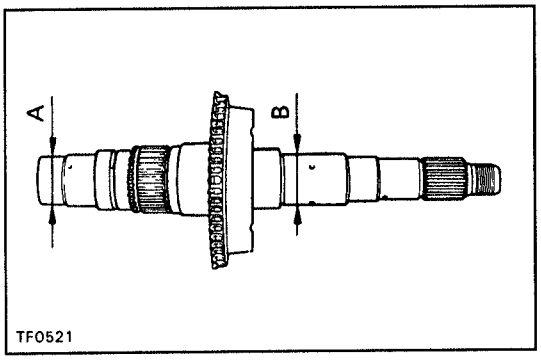

REAR OUTPUT SHAFT INSPECTION

TR014–0A

1. INSPECT REAR OUTPUT SHAFT
Using a micrometer, measure the outer diameter of the rear output shaft journal surface.
Minimum diameter:
Part A: 27.98 mm (1.1016 in.)
Part B: 36.98 mm (1.4561 in.)

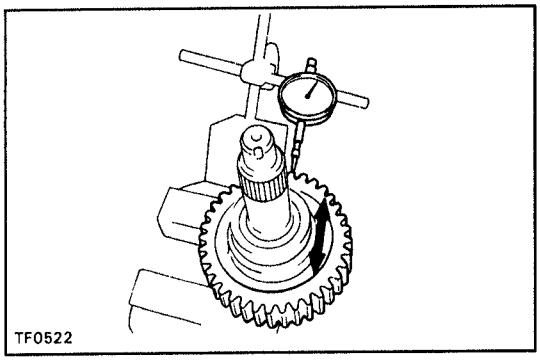

2. INSPECT DRIVE SPROCKET RADIAL CLEARANCE
Using a dial indicator, measure the radial clearance between the sprocket and shaft with the needle roller bearing installed.
Standard clearance:
0.010 – 0.055 mm (0.0004 – 0.0022 in.)
Maximum clearance:
0.055 mm (0.0022 in.)
If the clearance exceeds the maximum, replace the drive sprocket, rear output shaft or needle roller bearing.

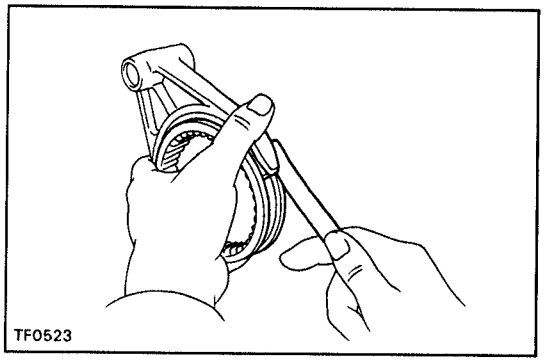
TF0523

3. **INSPECT FRONT DRIVE SHIFT FORK AND CLUTCH SLEEVE CLEARANCE**

Using a feeler gauge, measure the clearance between the front drive shift fork and clutch sleeve.

Maximum clearance:

1.0 mm (0.039 in.)

If the clearance exceeds the maximum, replace the shift fork or clutch sleeve.

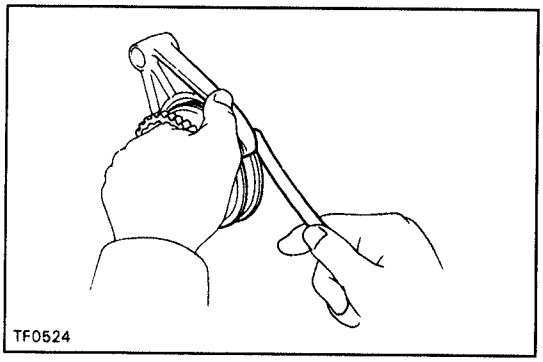
TF0524

4. **INSPECT HIGH AND LOW SHIFT FORK AND CLUTCH SLEEVE CLEARANCE**

Using a feeler gauge, measure the clearance between the high and low shift fork and clutch sleeve.

Maximum clearance:

1.0 mm (0.039 in.)

If the clearance exceeds the maximum, replace the shift fork or clutch sleeve.

REAR OUTPUT SHAFT ASSEMBLY

TR04K-02

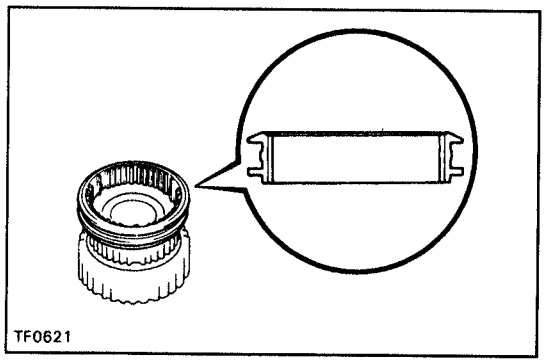
TF0621

1. **w/ A.D.D.:**
INSTALL FRONT DRIVE CLUTCH SLEEVE ONTO DRIVE SPROCKET

(a) Install the front drive clutch sleeve onto the drive sprocket.

HINT: Make sure to install the clutch sleeve in the correct direction.

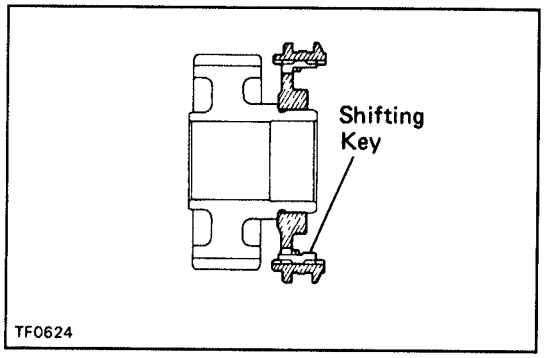

TF0624

(b) Install the shifting keys and springs.

NOTICE: Install the key springs positioned so that their end gaps are not in line.

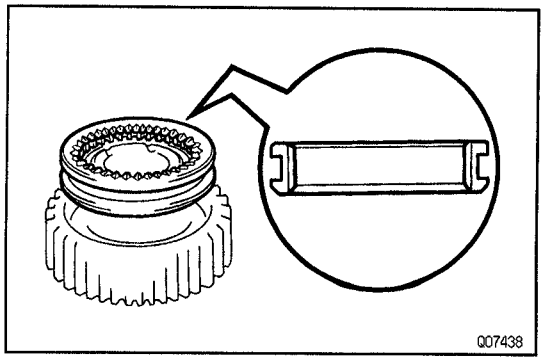
Q07438

2. **w/o A.D.D.:**
INSTALL FRONT DRIVE CLUTCH SLEEVE ONTO DRIVE SPROCKET

Install the front drive clutch sleeve onto the drive sprocket.

HINT: Make sure to install the clutch sleeve in the correct direction.

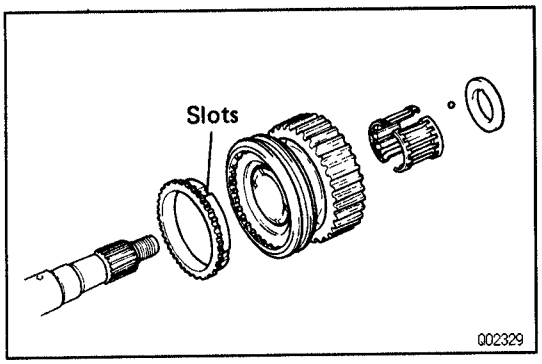

3. w/ A.D.D.:
INSTALL DRIVE SPROCKET WITH FRONT DRIVE CLUTCH SLEEVE ASSEMBLY, SPACER AND BEARING

w/o One touch 2–4 selector system:

(a) Apply gear oil to the shaft and needle roller bearing.
(b) Place the synchronizer ring on the spline and align the ring slots with the shifting keys.
(c) Install the needle roller bearing in the drive sprocket.
(d) Install the drive sprocket with the front drive clutch sleeve assembly.

w/ One touch 2–4 selector system:

(a) Apply gear oil to the shaft and needle roller bearing.
(b) Install the synchronizer inner ring, center ring and outer ring.
NOTICE: Align the slots of outer and inner rings.

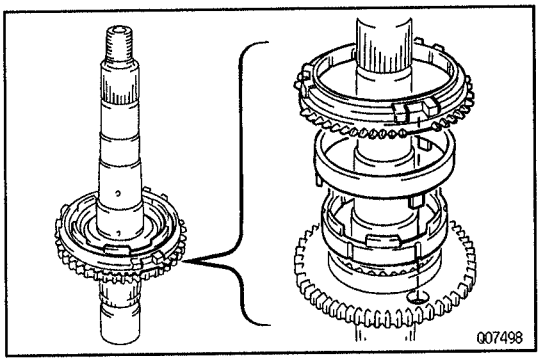

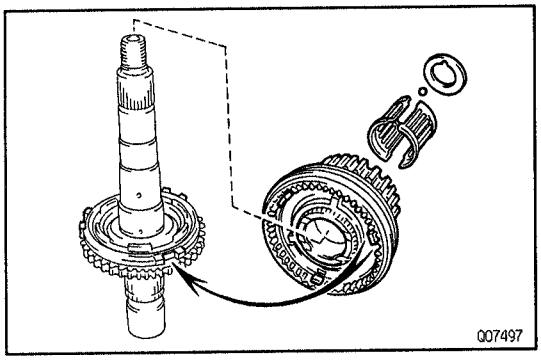

(c) Install the needle roller bearing in the drive sprocket.
(d) Install the drive sprocket with the front drive clutch sleeve assembly.

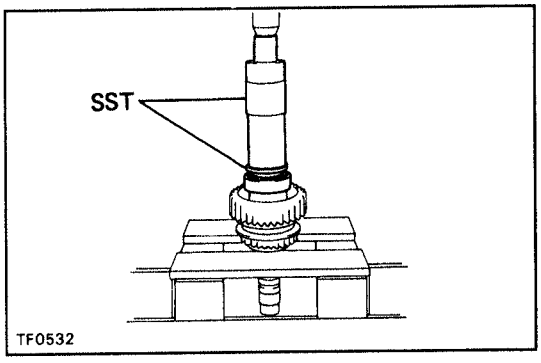

(e) Place the synchronizer ring on the gear and align the ring slots with the shifting keys.
(f) Install the spacer to align it with the ball.
(g) Using SST and a press, install a new bearing with the outer race snap ring groove toward the rear.
SST 09316–60011 (09316–00011, 09316–00071)

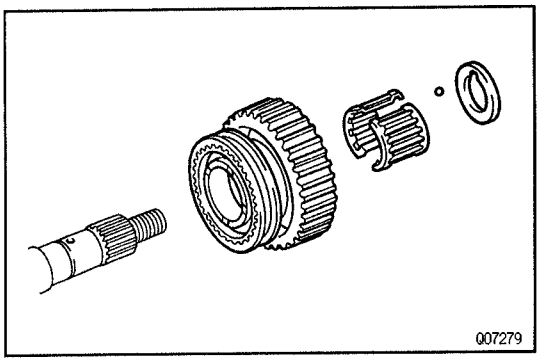

4. w/o A.D.D.:
INSTALL DRIVE SPROCKET WITH FRONT DRIVE CLUTCH SLEEVE, SPACER AND BEARING

(a) Apply gear oil to the shaft and needle roller bearing.
(b) Install the needle roller bearing in the drive sprocket.
(c) Install the drive sprocket with the front drive clutch sleeve assembly.

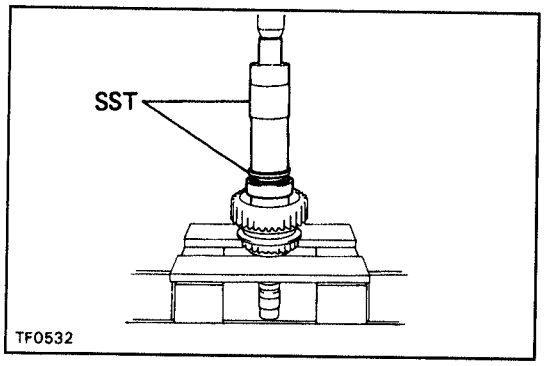

(d) Install the spacer to align it with the ball.
(e) Using SST and a press, install a new bearing with the outer race snap ring groove toward the rear.
SST 09316–60011 (09316–00011,09316–00071)

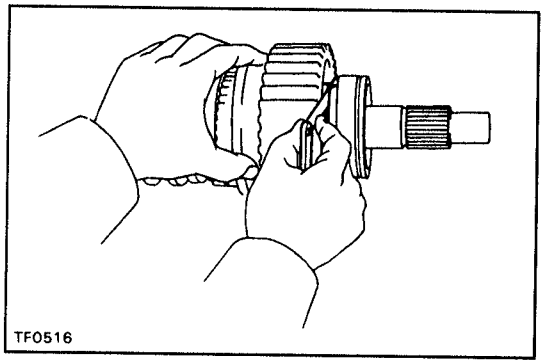

5. INSPECT DRIVE SPROCKET THRUST CLEARANCE
Using a feeler gauge, measure the drive sprocket thrust clearance.
Standard clearance:
0.10 – 0.25 mm (0.0039 – 0.0098 in.)

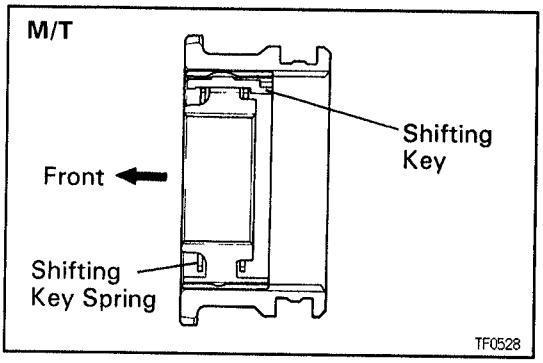

6. M/T:
INSERT HIGH AND LOW CLUTCH HUB ONTO CLUTCH SLEEVE
(a) Install the clutch hub and shifting keys onto the clutch sleeve.
(b) Install the shifting key springs under the shifting keys.
NOTICE: Install the key springs positioned so that their end gaps are not in line.

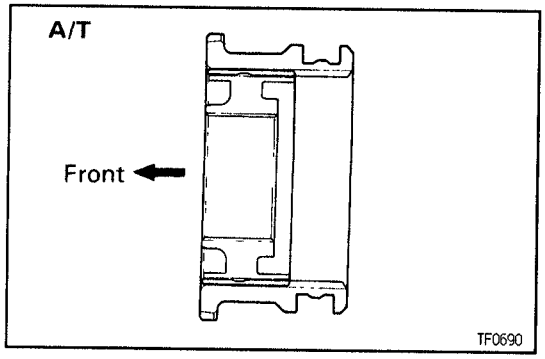

7. A/T:
INSERT HIGH AND LOW CLUTCH HUB ONTO CLUTCH SLEEVE
Install the clutch hub onto the clutch sleeve.

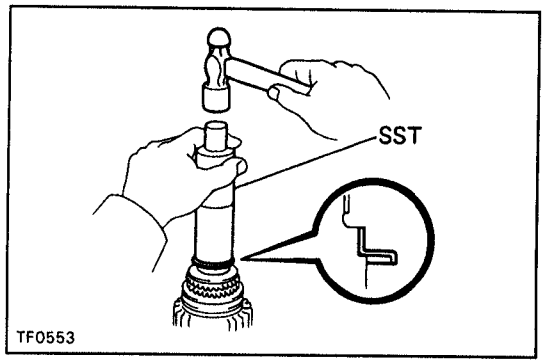

8. M/T:
INSTALL HIGH AND LOW CLUTCH HUB ASSEMBLY
(a) Using SST and a hammer, drive in a new key retainer.
SST 09316–60011 (09316–00011)
NOTICE: Be careful not to deform or damage the key retainer.

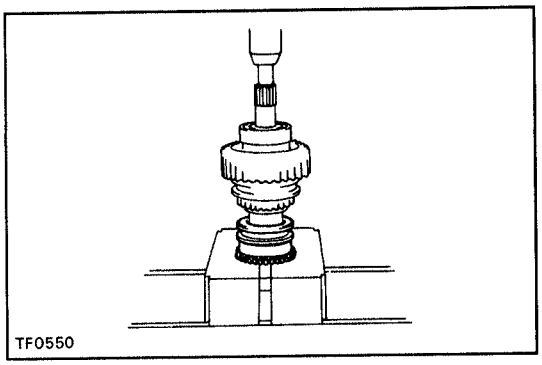
TF0550

(b) Using a press, install the high and low clutch hub assembly.

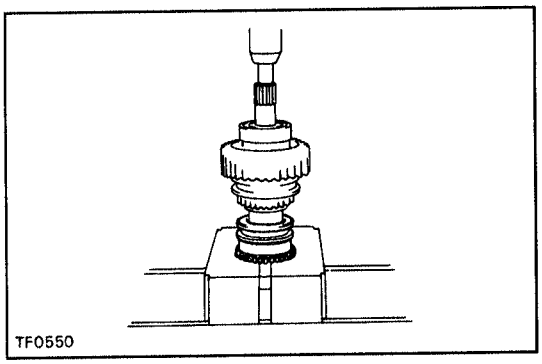
TF0550

9. A/T:
INSTALL HIGH AND LOW CLUTCH HUB ASSEMBLY
Using a press, install the high and low clutch hub assembly.

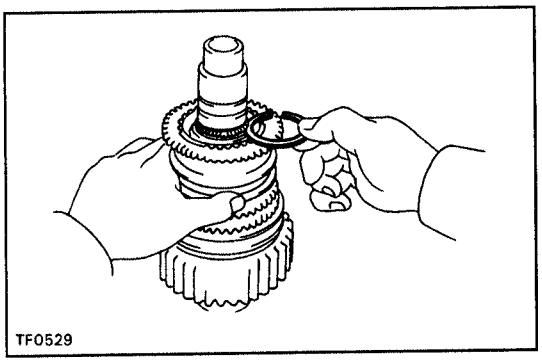
TF0529

10. INSTALL SNAP RING
Select a snap ring that will allow minimum axial play and install it to the shaft.

Mark	Thickness mm (in.)
A	2.10 – 2.15 (0.0827 – 0.0846)
B	2.15 – 2.20 (0.0846 – 0.0866)
C	2.20 – 2.25 (0.0866 – 0.0886)
D	2.25 – 2.30 (0.0886 – 0.0906)
E	2.30 – 2.35 (0.0906 – 0.0925)
F	2.35 – 2.40 (0.0925 – 0.0945)
G	2.40 – 2.45 (0.0945 – 0.0965)
H	2.45 – 2.50 (0.0965 – 0.0984)
J	2.50 – 2.55 (0.0984 – 0.1004)
K	2.00 – 2.05 (0.0787 – 0.0807)
L	2.05 – 2.10 (0.0807 – 0.0827)

INPUT SHAFT
COMPONENTS

TR018–06

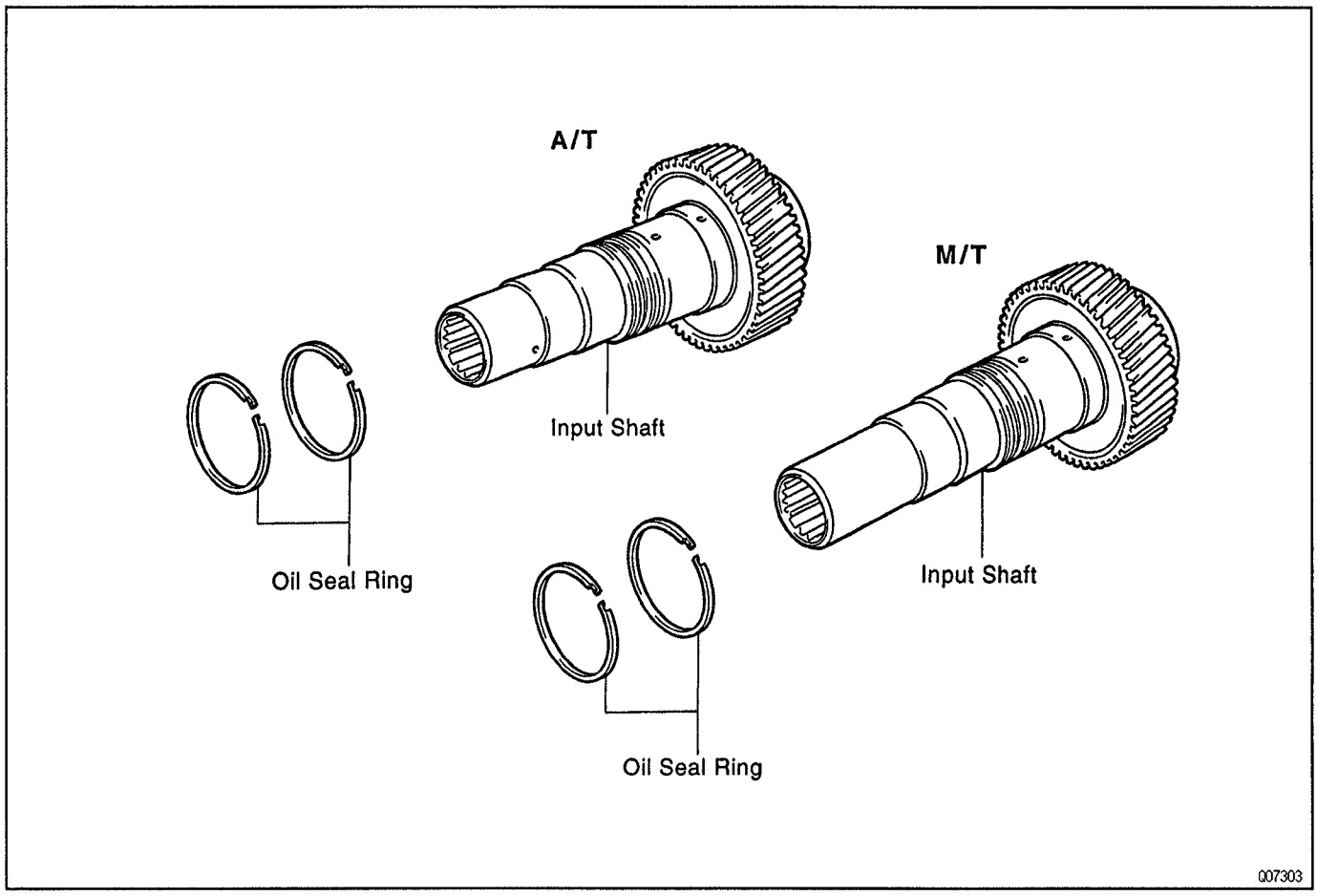

TR04L–02

INPUT SHAFT DISASSEMBLY

REMOVE OIL SEAL RINGS

Remove the 2 oil seal rings.

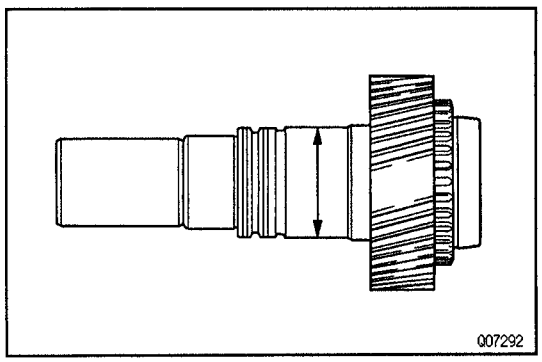

TR018–06

INPUT SHAFT INSPECTION

1. INSPECT INPUT SHAFT

(a) Using a micrometer, measure the outer diameter of the input shaft journal surface.

Minimum diameter:

47.59 mm (1.8736 in.)

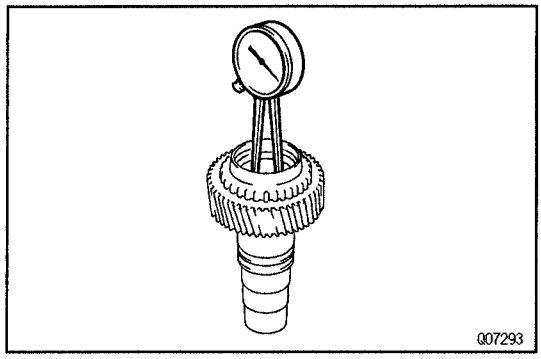

(b) Using a dial indicator, measure the inside diameter of the input shaft bushing.
Maximum inside diameter:
39.14 mm (1.5409 in.)
If the inside diameter exceeds the maximum, replace the input shaft.

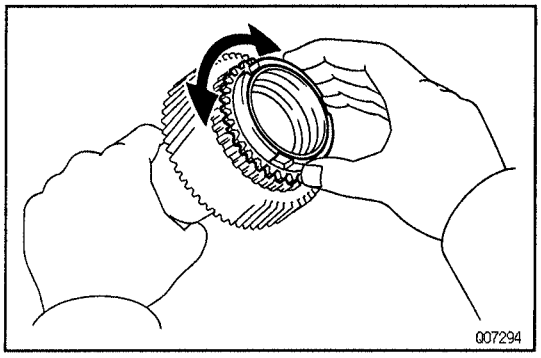

2. M/T:
INSPECT SYNCHRONIZER RING
(a) Turn the ring and push it in to check the braking action.

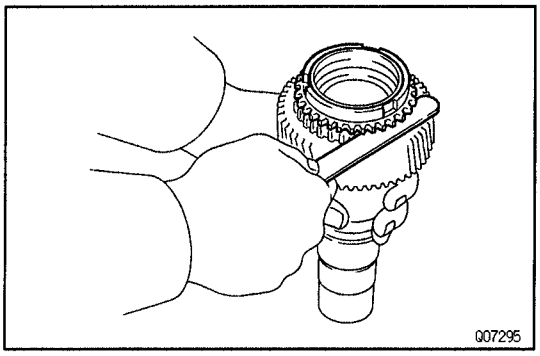

(b) Measure the clearance between the synchronizer ring back and the input shaft spline end.
Standard clearance:
1.05 – 1.85 mm (0.0413 – 0.0728 in.)
Minimum clearance:
0.80 mm (0.0315 in.)
If the clearance is less than the minimum, replace the synchronizer ring.

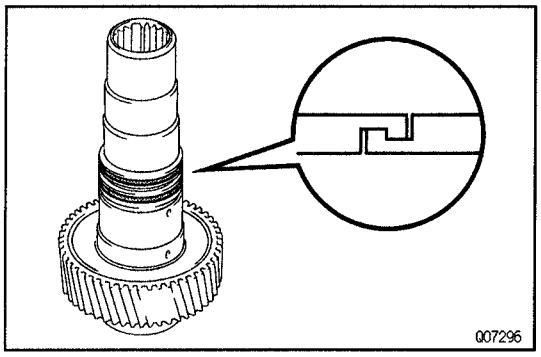

INPUT SHAFT ASSEMBLY

TR04M–02

INSTALL OIL SEAL RINGS
Install the 2 oil seal rings.
HINT:
- Apply gear oil to the oil seal ring.
- Hang securely to eliminate clearance.

PLANETARY GEAR
COMPONENTS

TR01A–06

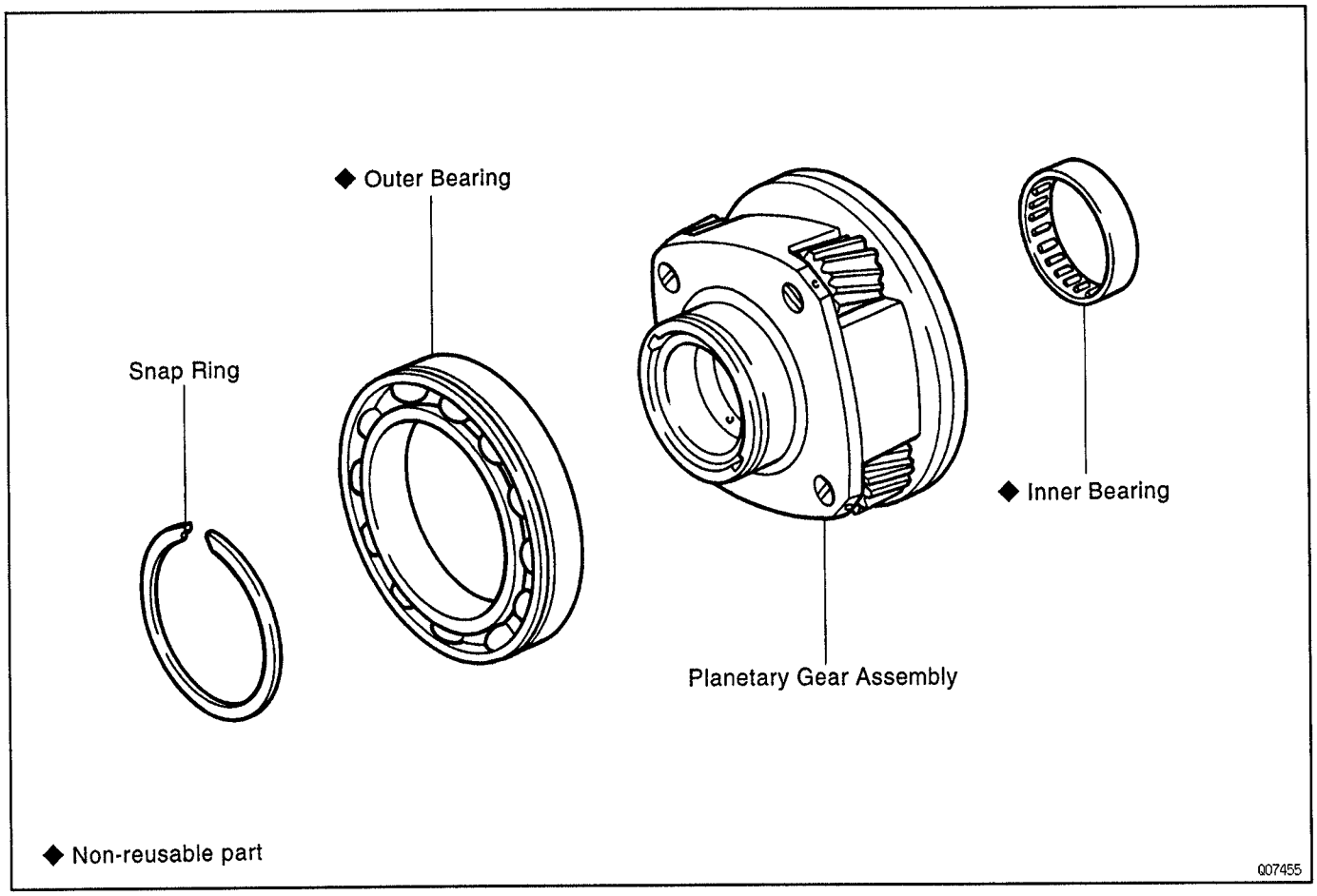

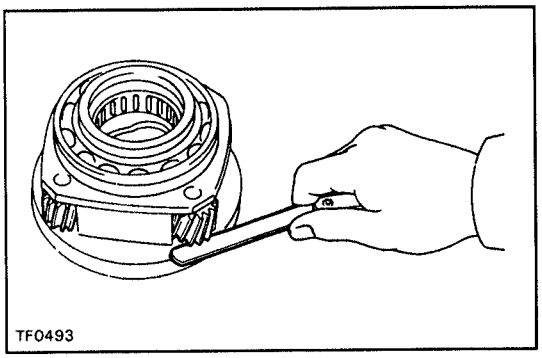

TR05H–01

PLANETARY GEAR INSPECTION

1. **INSPECT PINION GEAR THRUST CLEARANCE**

Using a feeler gauge, measure the planetary pinion gear thrust clearance.

Standard clearance:

0.11 – 0.84 mm (0.0043 – 0.0331 in.)

Maximum clearance:

0.84 mm (0.0331 in.)

If the clearance exceeds the maximum, replace the planetary gear assembly

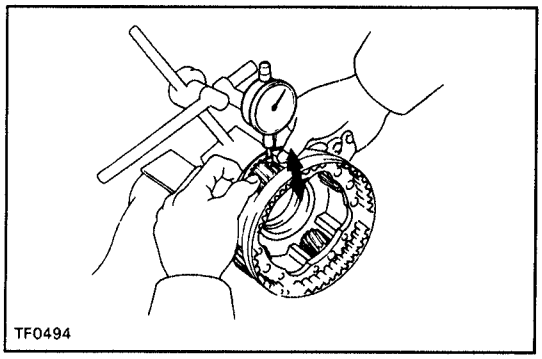
TF0494

2. INSPECT PLANETARY PINION GEAR RADIAL CLEARANCE

Using a dial indicator, measure the radial clearance of the planetary pinion gear.

Standard clearance:

0.009 – 0.038 mm (0.0004 – 0.0015 in.)

Maximum clearance:

0.038 mm (0.0015 in.)

If the clearance exceeds the maximum, replace the planetary gear assembly.

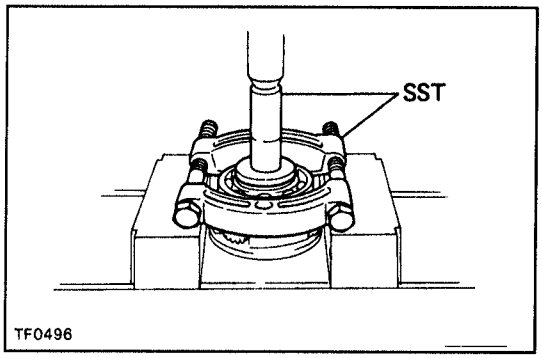

TF0496

3. IF NECESSARY, REPLACE PLANETARY GEAR OUTER BEARING

(a) Using a snap ring expander, remove the snap ring.

(b) Using SST and a press, remove the bearing.
SST 09554–30011, 09555–55010

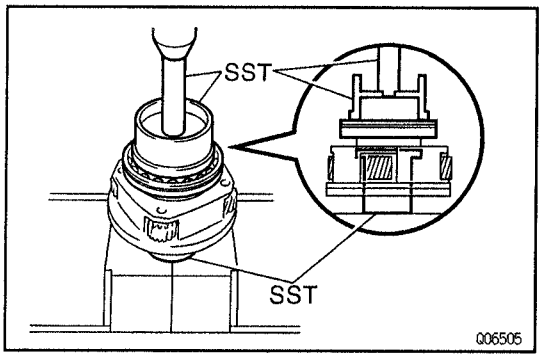

Q06505

(c) Using SST and a press, install a new bearing with the groove faced forward..
SST 09223–15020, 09515–30010, 09950–70010 (09951–07100)

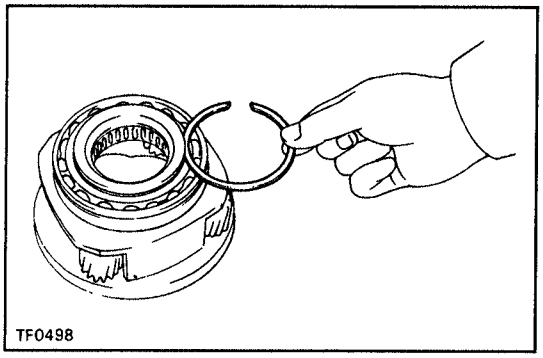
TF0498

(d) Select a snap ring that will allow minimum axial play.

Mark	Thickness mm (in.)
1	1.45 – 1.50 (0.0571 – 0.0591)
2	1.50 – 1.55 (0.0591 – 0.0610)
3	1.55 – 1.60 (0.0610 – 0.0630)
4	1.60 – 1.65 (0.0630 – 0.0650)
5	1.65 – 1.70 (0.0650 – 0.0669)

(e) Using a snap ring expander, install the snap ring.

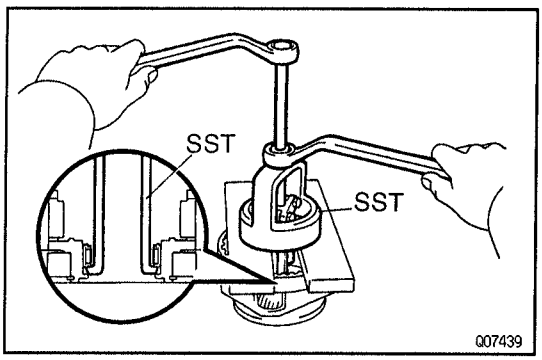

Q07439

4. IF NECESSARY, REPLACE PLANETARY GEAR THRUST INNER BEARING

(a) Using SST and a press, remove the bearing.
SST 09612–65014 (09612–01030, 09612–01050)
NOTICE: Hang SST securely to the clearance between the thrust inner bearing and planetary gear.

TR

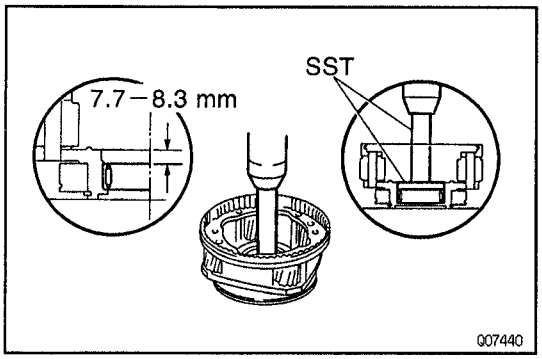

(b) Using SST and a press, install a new bearing.
SST 09950–60010 (09951–00570),
09950–70010 (09951–07100)
Bearing depth:
7.7 – 8.3 mm (0.303 – 0.327 in.)

OIL SEALS
COMPONENTS

TR01C–06

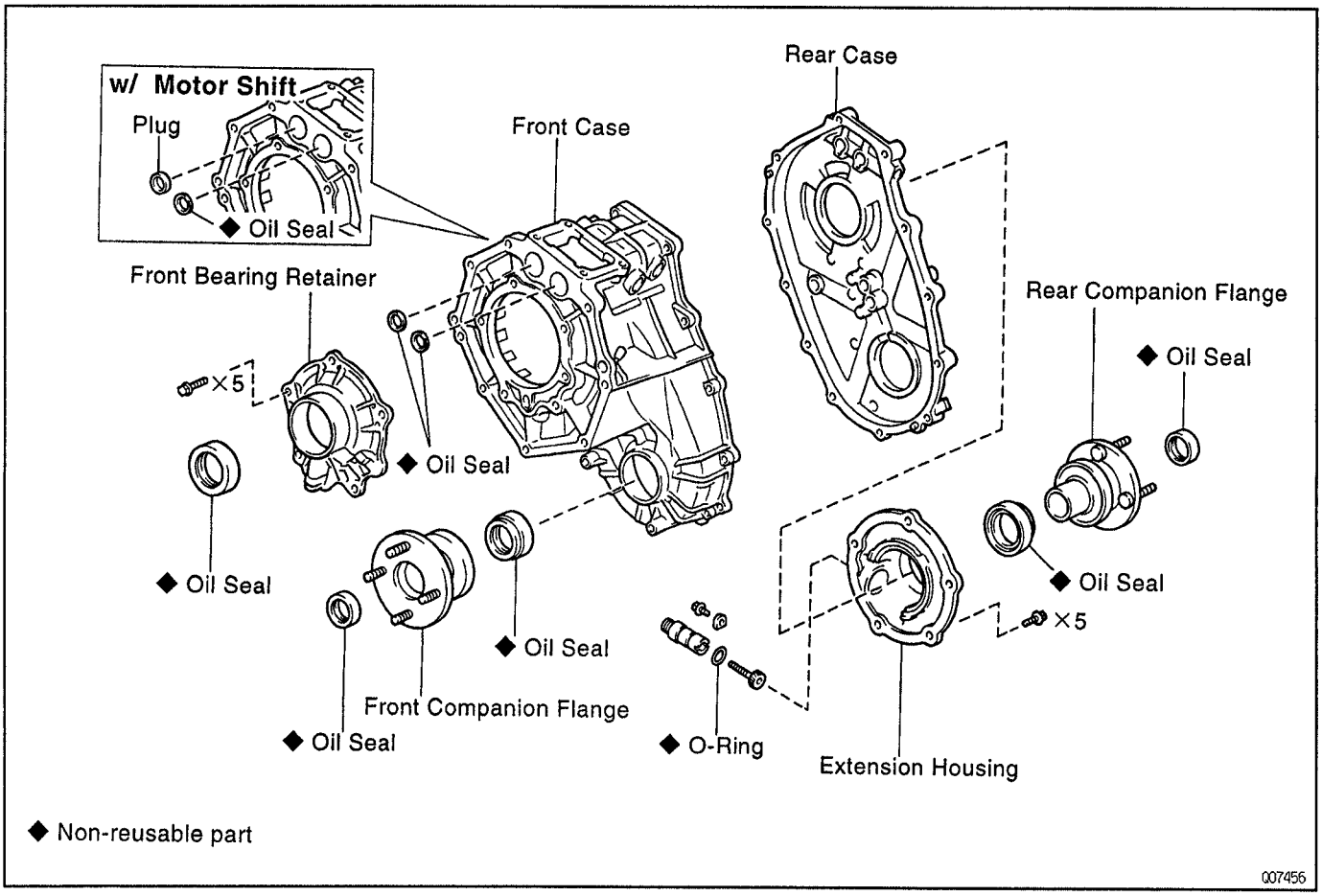

TR

TR05J–01

OIL SEALS REPLACEMENT

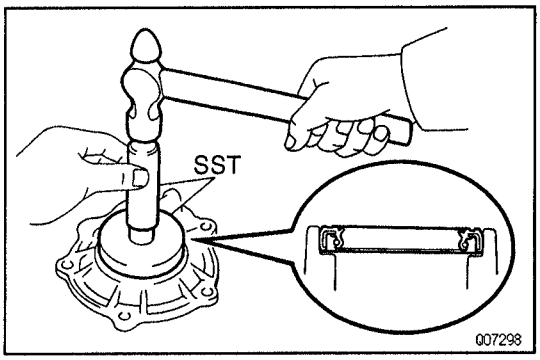

1. IF NECESSARY, REPLACE FRONT BEARING RETAINER OIL SEAL

(a) Using a screwdriver and hammer, drive out the oil seal.

(b) Using SST and a hammer, drive in a new oil seal until its surface is flush with the retainer upper surface.
SST 09950–60010 (09951–00590),
09950–70010 (09951–07100)

(c) Coat the lip of the oil seal with MP grease.

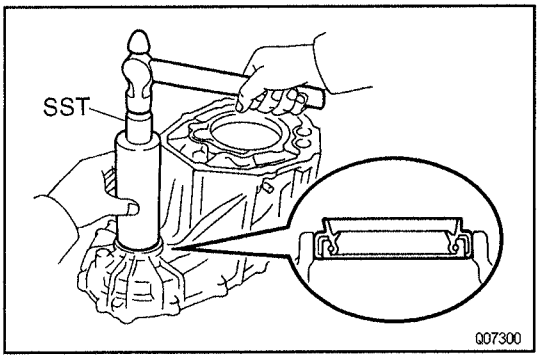

2. IF NECESSARY, REPLACE FRONT CASE OIL SEAL

(a) Using a screwdriver and hammer, drive out the oil seal.

(b) Using SST and a hammer, drive in a new oil seal until its surface is flush with the case upper surface.
SST 09316–60011 (09316–00011)

(c) Coat the lip of the oil seal with MP grease.

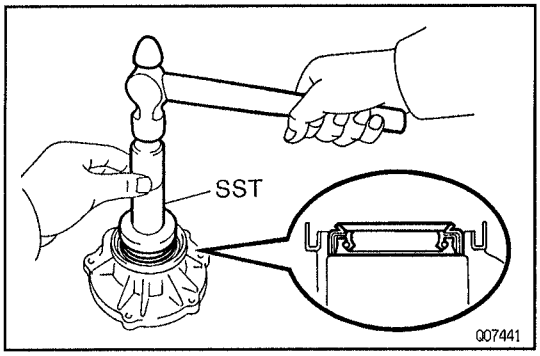

3. IF NECESSARY, REPLACE EXTENSION HOUSING OIL SEAL

(a) Using a screwdriver and hammer, drive out the oil seal.

(b) Using SST and a hammer, drive in a new oil seal until its surface is flush with the housing upper surface.
SST 09554–22010

(c) Coat the lip of the oil seal with MP grease.

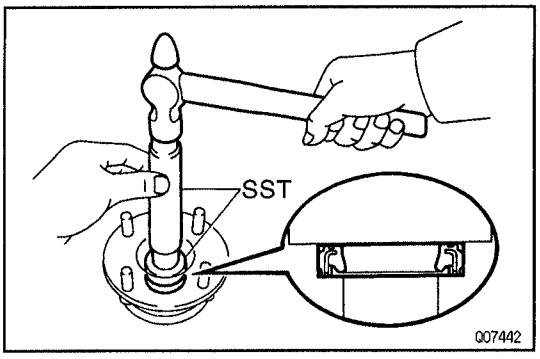

4. IF NECESSARY, REPLACE FRONT AND REAR COMPANION FLANGE OIL SEALS

(a) Using a screwdriver and hammer, drive out the oil seals from the 2 flanges.

(b) Using SST and a hammer, drive in a new oil seal.
SST 09950–60010 (09951–00220, 09951–00350,
09952–06010), 09950–70010
(09951–07100)

(c) Coat the lip of the oil seal with MP grease.

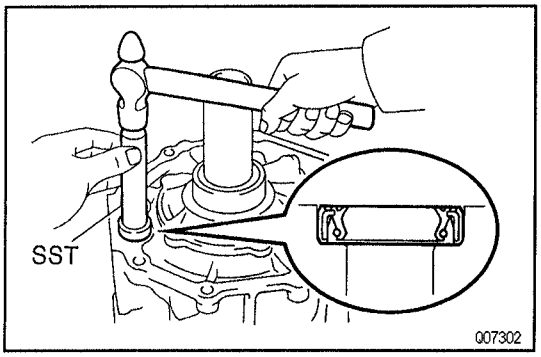

5. IF NECESSARY, REPLACE SHIFT FORK SHAFT OIL SEALS

(a) Using a screwdriver, pry out the oil seal.

(b) Using SST and a hammer, drive in a new oil seal.
SST 09304–12012
Oil seal depth:
–0.5 ~ 0.5 mm (–0.020 ~ 0.020 in.)

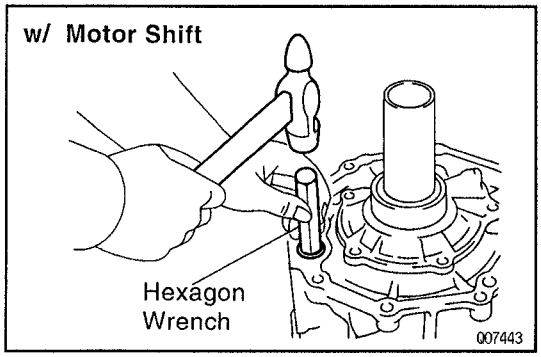

6. **w/ One touch 2–4 selector system:**
(Only when replacing the front case)
IF NECESSARY, REPLACE PLUG
Using a hexagon wrench (19 mm) and hammer, drive in a new plug.

COMPONENT PARTS INSTALLATION
TR05K–01

BASIC SUBASSEMBLY REASSEMBLY

Assembly is in the reverse order of separation.
INSTALLATION HINT: Coat all of the sliding and retating surfaces with gear oil before assembly.

ONE TOUCH 2–4 SELECTOR SYSTEM

PARTS LOCATION
TR04P–02

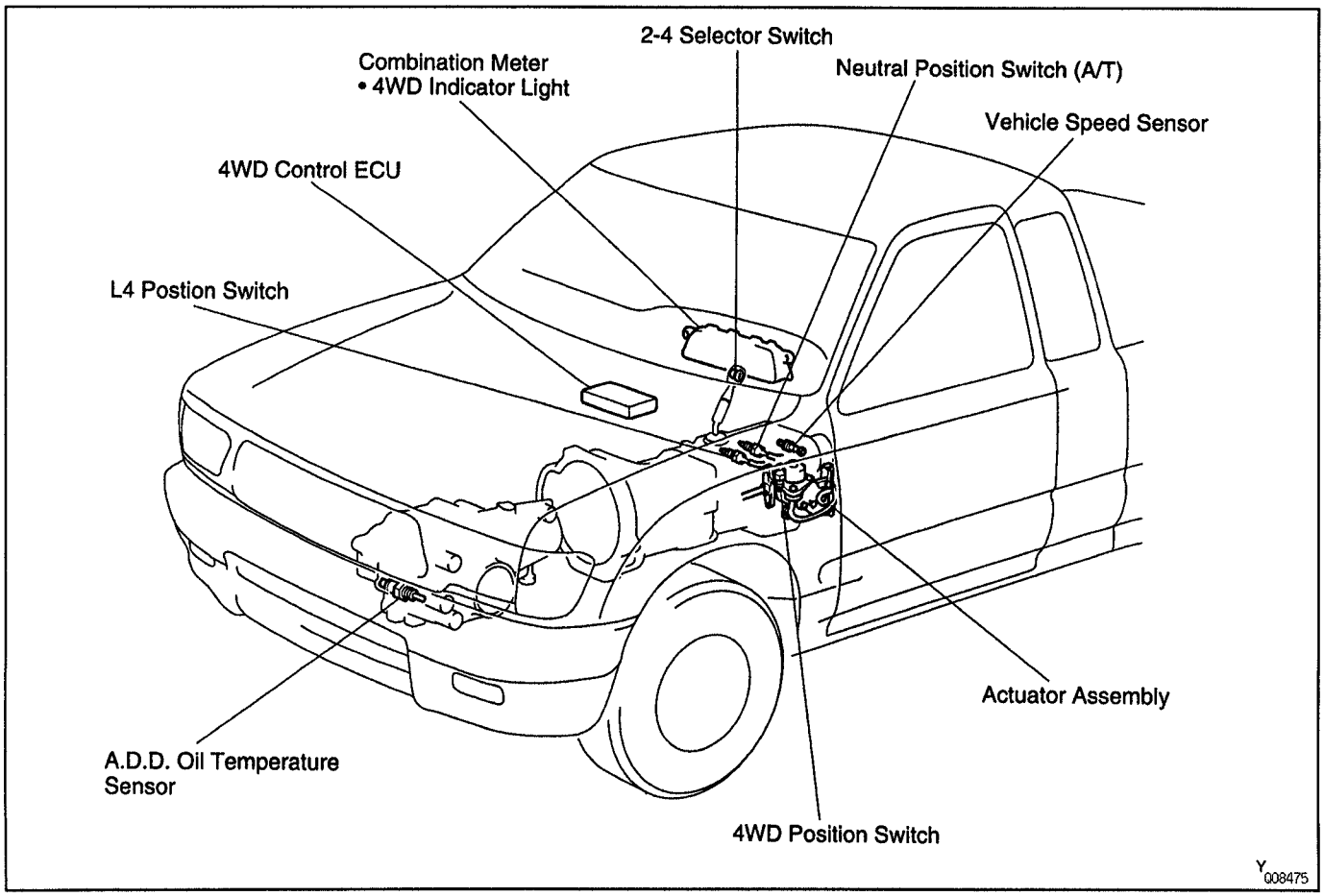

TR04G-02

MATRIX CHART OF PROBLEM SYMPTOMS

Trouble \ Parts name		4WD Fuse	2-4 Selector Switch	L4 Position Switch	4WD Position Switch	A.D.D. Oil Temp. Sensor	Vehicle Speed Sensor	4WD Indicator Light	Actuator Assembly	A.D.D. Control System	4WD Control ECU	Wire Harness	Transfer Assembly
See page		—	TR-41	TR-20	TR-20	TR-41	BE-36	BE-31	TR-41	SA-60	TR-43	—	—
2WD ↓ 4WD	Shift from 2WD to 4WD (H4 and L4) impossible	1			5	3	4	6	7	8	9	2	10
	Shift from 2WD to 4WD (H4) impossible		1								3	2	
	Shift from 2WD to 4WD (L4) impossible			1							3	2	
4WD ↓ 2WD	Shift from 4WD (H4 and L4) to 2WD impossible	1						3	4	5	6	2	7
	Shift from 4WD (H4) to 2WD impossible		1								3	2	
	Shift from 4WD (L4) to 2WD impossible			1							3	2	

V06630

TR

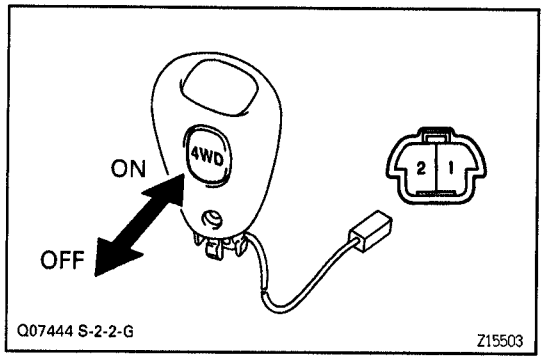

2–4 SELECTOR SWITCH INSPECTION TR04R–02

INSPECT 2–4 SELECTOR SWITCH CONTINUITY

Switch position	Tester connection to terminal number	Specified condition
OFF	1 – 2	No continuity
ON	1 – 2	Continuity

If continuity is not as specified, replace the shift lever knob.

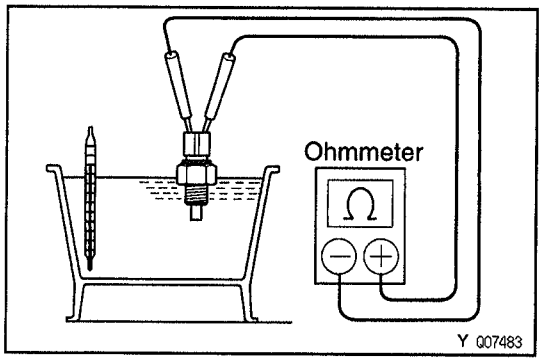

A.D.D. OIL TEMPERATURE SENSOR INSPECTION TR04S–02

INSPECT SENSOR RESISTANCE

Measure the resistance between terminals.

HINT: When checking, apply 0.1 mA current.

Temperature °C (°F)	Resistance (kΩ)
–25 (–13)	Approx. 20.5
5 (41)	Approx. 4.593
30 (86)	Approx. 1.660

If resistance value is not as specified, replace the sensor.

TR

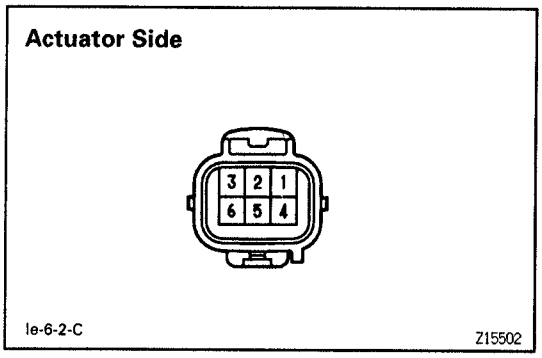

ACTUATOR ASSEMBLY INSPECTION TR04T–02

1. INSPECT RESISTANCE

(a) Using an ohmmeter, measure the resistance between terminals 2 and 3.

Standard resistance:

0.3 – 100 Ω

(b) Using an ohmmeter, measure the resistance between terminals 2 or 3 and body ground.

Standard resistance:

More than 0.5 MΩ

If resistance value is not as specified, replace the actuator assembly.

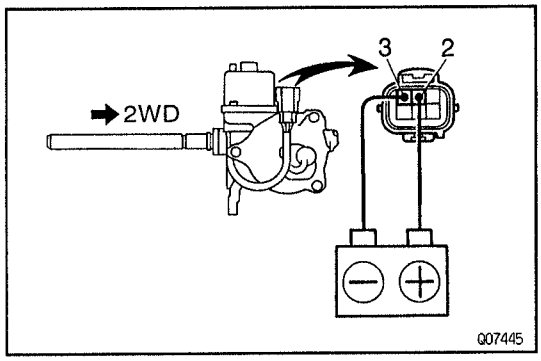

2. INSPECT OPERATION

(a) Connect the positive (+) lead from the battery to terminal 2 and the negative (–) lead to terminal 3, then check that the actuator fork shaft moves to 2WD position.

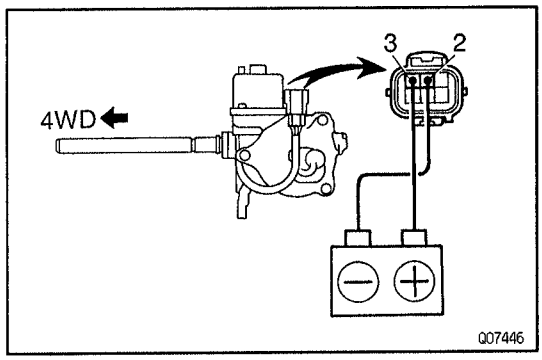

(b) Connect the positive (+) lead from the battery to terminal 3 and the negative (–) lead to terminal 2, then check that the actuator fork shaft moves to 4WD position.
If operation is not as specified, replace the actuator assembly.

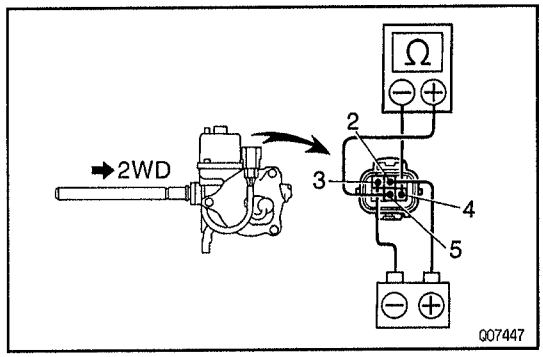

3. INSPECT LIMIT SWITCH CONTINUITY

(a) Connect the positive (+) lead from the battery to terminal 2 and the negative (–) lead to terminal 3.
(b) Connect the positive (+) lead from the ohmmeter to terminal 5 and the negative (–) lead to terminal 4.
(c) Check that there is continuity between terminals 4 and 5.

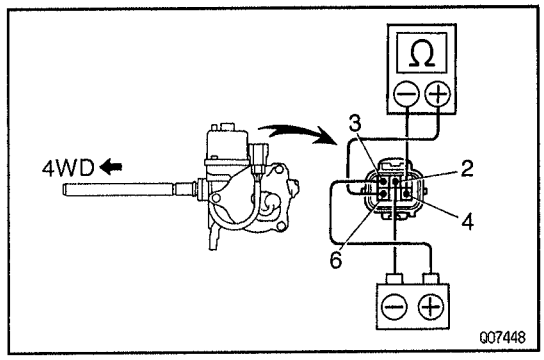

(d) Connect the positive (+) lead from the battery to terminal 3 and the negative (–) lead to terminal 2.
(e) Connect the positive (+) lead from the ohmmeter to terminal 6 and the negative (–) lead to terminal 4.
(f) Check that there is continuity between terminal 4 and 6.
If continuity is not as specified, replace the actuator assembly.

TR04U–02

NO.1 VEHICLE SPEED SENSOR INSPECTION

(See page BE–36)

TR04V–02

4WD INDICATOR LAMP INSPECTION

CHECK COMBINATION METER

(See page BE–31)

TR04W–02

From Back Side

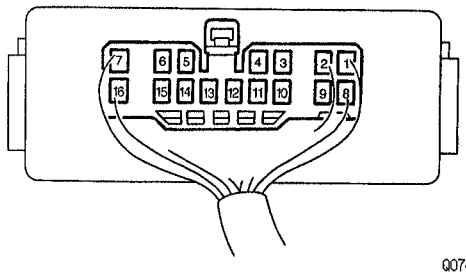

Q07449

w/ One touch 2–4 selector system: 4WD CONTROL ECU INSPECTION

INSPECT 4WD CONTROL ECU

Connect the wire harness side connector to the ECU and inspect wire harness side connector from the back side, as shown.

STANDARD VALUE OF ECU TERMINAL

Terminals	Symbols	Condition		Standard Value
1 – 8	IND – GND	Engine Running. 2WD → 4WD (4WD Indicator light light up).		12 ~ 16 V → 1.2 V or less
3 – 2	M1 – M2	Ignition switch ON. 2WD → *1		0.5 V or less → *2
		→ *1 4WD (2-4 selector switch ON or transfer shift lever L4 position). → *3		→ *2 10 ~ 14 V (for about 5 second) then less than 0.5 V → *4
		→ *3 2WD (2-4 selector switch OFF and transfer shift lever H position).		→ *4 10 ~ 14 V (for about 5 second) then less than 0.5 V
4 – 8	V4 – GND	Ignition switch ON. 4WD (2-4 selector switch ON and transfer shift lever H position or 2-4 selector switch OFF and transfer shift lever L4 position).	A.D.D. VSV Temp. 20°C (68°F)	9 V or less (after 0.1 second)
			A.D.D VSV Temp. 120°C (248°F)	13 V or less (after 0.1 second)
5 – 8	SPD – GND	Ignition switch ON. During driving.		Repeatedly chages from Below 0.5 V or less to 4 V or more
6 –8	4WD – GND	Ignition switch ON. 4WD (2-4 selector switch ON and transfer shift lever H position or 2-4 selector switch OFF and transfer shift lever L4 position)		2 V or less
8 – Body Ground	GND – Body Ground	Constant		Continuity
9 – 8	RL-2 – GND	Ignition switch ON. 4WD (2-4 selector switch ON or transfer shift lever L4 position) → 2WD (2-4 selector switch OFF and transfer shift lever H position)		0.5 V or less → 10 ~ 14 V then 0.5 V (after 5 second)
10 – 8	RL-1 – GND	Ignition switch ON. 2WD (2 – 4 selector switch OFF and transfer shift lever H position) → 4WD (2-4 selector switch ON or transfer shift lever L4 position)		0.5 V or less → 10 ~ 14 V then 0.5 (after 5 second)
11 – 8	V2 – GND	Ignition switch ON. 2WD (2-4 selector switch OFF and transfer shift lever H position)	A.D.D. VSV Temp. 20°C (68°F)	9 V or less (after 0.1 second)
			A.D.D VSV Temp. 120°C (248°F)	13 V or less (after 0.1 second)
13 – 12	TH+ – TH–	Oil temp. sensor	–20°C (–4°F)	13.36 ~ 18.02 kΩ
			–10°C (14°F)	8.07 ~ 10.61 kΩ
			–5°C (23°F)	6.47 ~ 8.43 kΩ
			5°C (41°F)	4.15 ~ 5.27 kΩ
14 – 8	L4 – GND	Transfer shift lever H2 (2-4 selector switch OFF and transfer shift lever H position) → L4		10 ~ 14 V → 0.5 V or less
15 – 8	2-4 – GND	2-4 selector switch OFF → ON		10 ~ 14 V → 2 V or less
16 – 8	IG – GND	Constant		10 ~ 14 V

TR

V06629

SERVICE SPECIFICATIONS

SERVICE DATA

TR01F-09

Oil pump body	Body clearance	STD	0.09 – 0.16 mm	0.0035 – 0.0063 in.
		Max	0.16 mm	0.0063 in.
	Tip clearance	STD	0.05 – 0.15 mm	0.0020 – 0.0059 in.
		Max	0.15 mm	0.0059 in.
	Side clearance	STD	0.03 – 0.10 mm	0.0012 – 0.0039 in.
		Max	0.10 mm	0.0039 in.
Rear output Shaft assembly	Drive sprocket thrust clearance	STD	0.10 – 0.25 mm	0.0039 – 0.0098 in.
		Max	0.25 mm	0.0098 in.
	Rear output shaft journal diameter			
	Part A	Min	27.98 mm	1.1016 in.
	Part B	Min	36.98 mm	1.4561 in.
	Drive sprocket radial clearance	STD	0.010 – 0.055 mm	0.0004 – 0.0022 in.
		Max	0.055 mm	0.0022 in.
	Front drive shift fork to clutch sleeve clearance	Max	1.0 mm	0.039 in.
	High and low shift fork to sleeve clearance	Max	1.0 mm	0.039 in.
	Rear output shaft snap ring thickness			
		Mark		
		A	2.10 – 2.15 mm	0.0827 – 0.0846 in.
		B	2.15 – 2.20 mm	0.0846 – 0.0866 in.
		C	2.20 – 2.25 mm	0.0866 – 0.0886 in.
		D	2.25 – 2.30 mm	0.0886 – 0.0906 in.
		E	2.30 – 2.35 mm	0.0906 – 0.0925 in.
		F	2.35 – 2.40 mm	0.0925 – 0.0945 in.
		G	2.40 – 2.45 mm	0.0945 – 0.0965 in.
		H	2.45 – 2.50 mm	0.0965 – 0.0984 in.
		J	2.50 – 2.55 mm	0.0984 – 0.1004 in.
		K	2.00 – 2.05 mm	0.0787 – 0.0807 in.
		L	2.05 – 2.10 mm	0.0807 – 0.0827 in.

Input shaft	Input shaft journal outer diameter			
		Min	47.59 mm	1.8736 in.
	Input shaft bushing diameter	Max	39.14 mm	1.5409 in.
	Synchronizer ring to sprocket clearance			
		STD	1.05 – 1.85 mm	0.0413 – 0.0728 in.
		Min	0.80 mm	0.0315 in.
	Input shaft snap ring thickness	Mark		
		A	2.10 – 2.15 mm	0.0827 – 0.0846 in.
		B	2.15 – 2.20 mm	0.0846 – 0.0866 in.
		C	2.20 – 2.25 mm	0.0866 – 0.0886 in.
		D	2.25 – 2.30 mm	0.0886 – 0.0906 in.
		E	2.30 – 2.35 mm	0.0906 – 0.0925 in.
		F	2.35 – 2.40 mm	0.0925 – 0.0945 in.
		G	2.40 – 2.45 mm	0.0945 – 0.0965 in.
		H	2.45 – 2.50 mm	0.0965 – 0.0984 in.
		J	2.50 – 2.55 mm	0.0984 – 0.1004 in.
		K	2.55 – 2.60 mm	0.1004 – 0.1024 in.
		L	2.60 – 2.65 mm	0.1024 – 0.1043 in.
		M	2.65 – 2.70 mm	0.1043 – 0.1063 in.
		N	2.70 – 2.75 mm	0.1063 – 0.1083 in.
		P	2.75 – 2.80 mm	0.1083 – 0.1102 in.
		Q	2.80 – 2.85 mm	0.1102 – 0.1122 in.
		R	2.85 – 2.90 mm	0.1122 – 0.1142 in.
		S	2.90 – 2.95 mm	0.1142 – 0.1161 in.
		T	2.95 – 3.00 mm	0.1161 – 0.1181 in.
		U	3.00 – 3.05 mm	0.1181 – 0.1201 in.
Planetary gear	Pinion gear thrust clearance	STD	0.11 – 0.84 mm	0.0043 – 0.0331 in.
		Max	0.84 mm	0.0331 in.
	Pinion gear radial clearance	STD	0.009 – 0.038 mm	0.0004 – 0.0015 in.
		Max	0.038 mm	0.0015 in.
	Outer bearing snap ring thickness			
		Mark		
		1	1.45 – 1.50 mm	0.0571 – 0.0591 in.
		2	1.50 – 1.55 mm	0.0591 – 0.0610 in.
		3	1.55 – 1.60 mm	0.0610 – 0.0630 in.
		4	1.60 – 1.65 mm	0.0630 – 0.0650 in.
		5	1.65 – 1.70 mm	0.0650 – 0.0669 in.
	Thrust inner bearing depth		7.7 – 8.3 mm	0.303 – 0.327 in.
Oil seal	Speedometer driven gear oil seal depth		25 mm	0.98 in.
	Shift fork shaft oil seal depth		−0.5 ~ 0.5 mm	−0.020 ~ 0.020 in.

TORQUE SPECIFICATIONS

Part tightened	N·m	kgf·cm	ft·lbf
Speedometer driven gear set bolt	11.5	115	8
4WD position switch	37	380	27
L4 position switch	37	380	27
Neutral position switch	37	380	27
Protector	18	185	13
Front bearing retainer	11.5	115	8
Control retainer	18	185	13
Upper cover and oil deflector	18	185	13
Companion flange lock nut	118	1,200	87
Extension housing	12	120	9
Front case x Rear case	28	285	21
Straight screw plug for shift fork shaft	18.6	190	14
Front drive shaft fork (w/ One touch 2−4 selector system)	24	240	17
Actuator assembly x Rear case (w/ One touch 2−4 selector system)	20	200	14
Separator with oil strainer x Front case	7.5	80	69 (in.lbf)
Oil pump body x Front case	7.5	80	69 (in.lbf)
Straight screw plug for ring gear	18.6	190	14
Relief valve x Oil pump body	29.4	300	21
Oil pump plate x Oil pump body	7.4	75	65 (in.lbf)

PROPELLER SHAFT

PRECAUTION ..... PR– 2
PREPARATION ..... PR– 2
TROUBLESHOOTING ..... PR– 3
PROPELLER SHAFT ..... PR– 4
SERVICE SPECIFICATIONS ..... PR– 15

PRECAUTION

PR00T–05

Be careful not to grip the propeller shaft tube too tightly in a vise as this will cause deformation.

PREPARATION

PR00U–0D

SST (SPECIAL SERVICE TOOLS)

	09325–20010	Transmission Oil Plug	2–joint type: Transmission oil leakage prevention
	09325–40010	Transmission Oil Plug	3–joint type: Transmission oil leakage prevention
	09330–00021	Companion Flange Holding Tool	Flange removal and installation
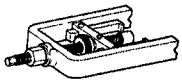	09332–25010	Universal Joint Bearing Remover & Replacer	Spider bearing replacement
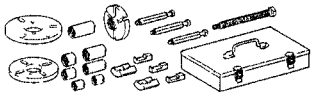	09950–30010	Puller A Set	Flange removal
	(09951–03010)	Upper Plate	
	(09953–03010)	Center Bolt	
	(09954–03010)	Arm	
	(09955–03030)	Lower Plate 130	
	(09956–03020)	Adapter 18	

PR00V–08

EQUIPMENT

Dial indecator	
Torque wrench	

TROUBLESHOOTING

PR004-08

Use the table below to help you find the cause of the problem. The numbers indicate the priority of the likely cause of the problem. Check each part in order. If necessary, replace these parts.

See Page / Parts Name / Trouble	PR-8	PR-8	PR-7	PR-7	PR-8	PR-8	
	Sleeve yoke spline worn	Center bearing worn	Propeller shaft runout	Propeller shaft imbalance	Sleeve yoke spline stuck	Spider bearing worn or stuck	Transmission extension housing rear bushing worn
Noise	2	1				3	
Vibration			3	4	2		1

PR

V04454

PROPELLER SHAFT
COMPONENTS

PR020-05

[2WD]
2-Joint Type
TMC-made

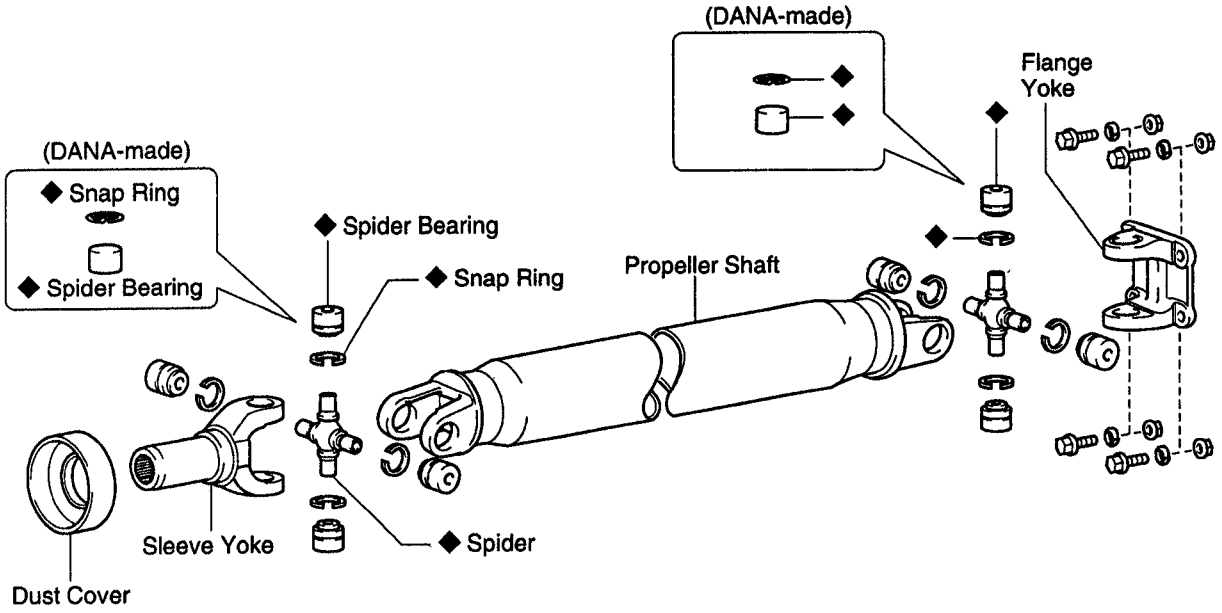

3-Joint Type

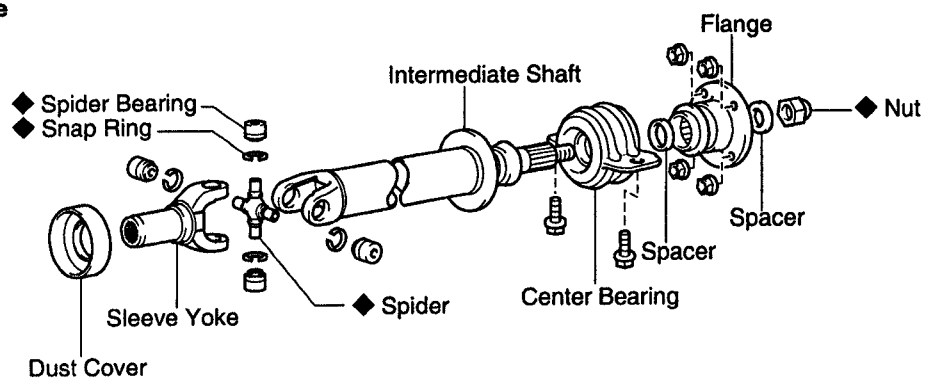

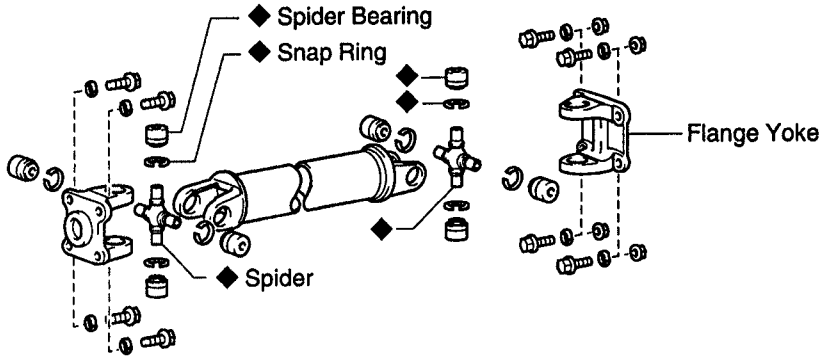

Q07222

◆ Non-reusable part

Y

Z16692

[4WD]

Front Propeller Shaft

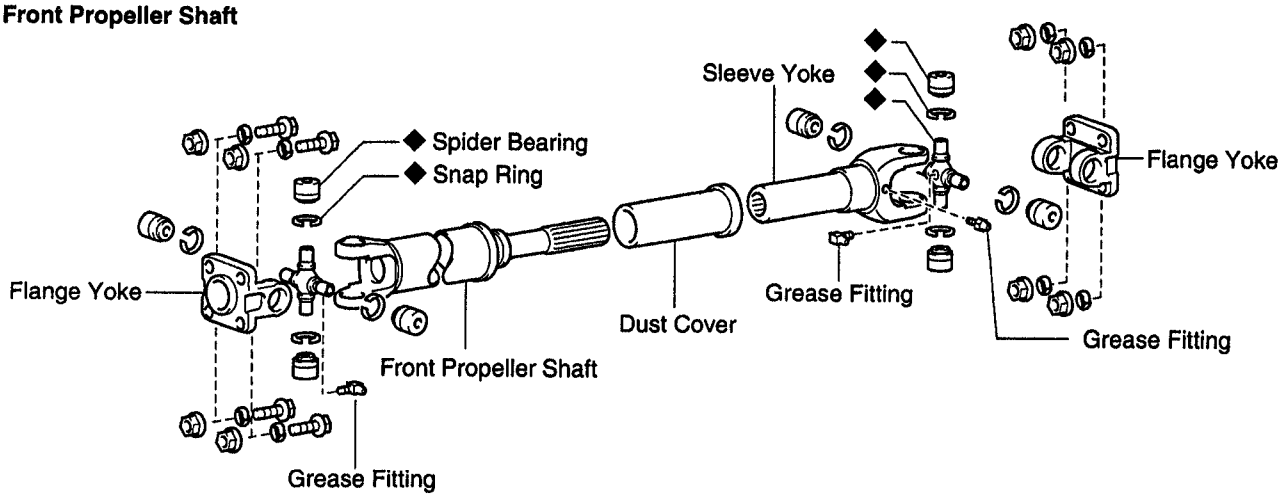

Rear Propeller Shaft
2-Joint Type

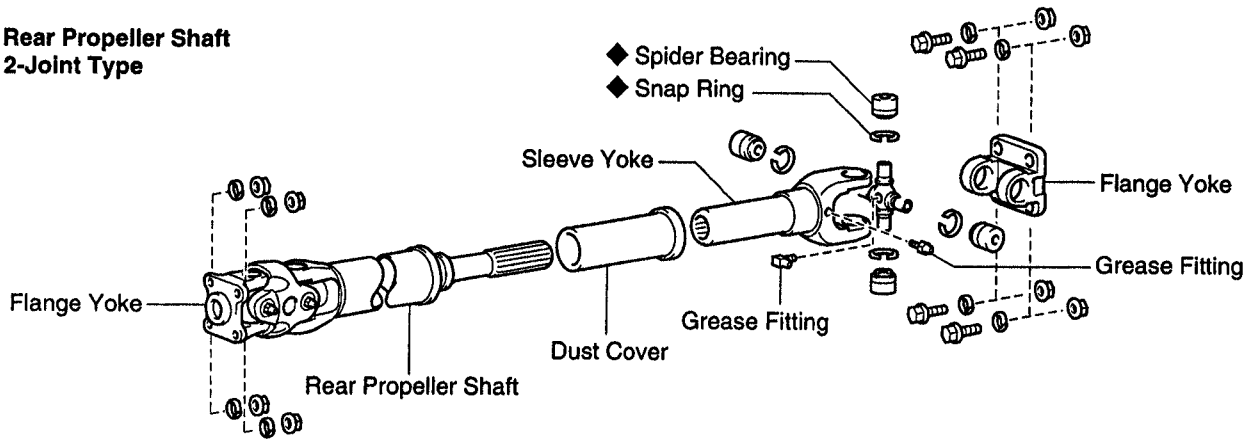

3-Joint Type

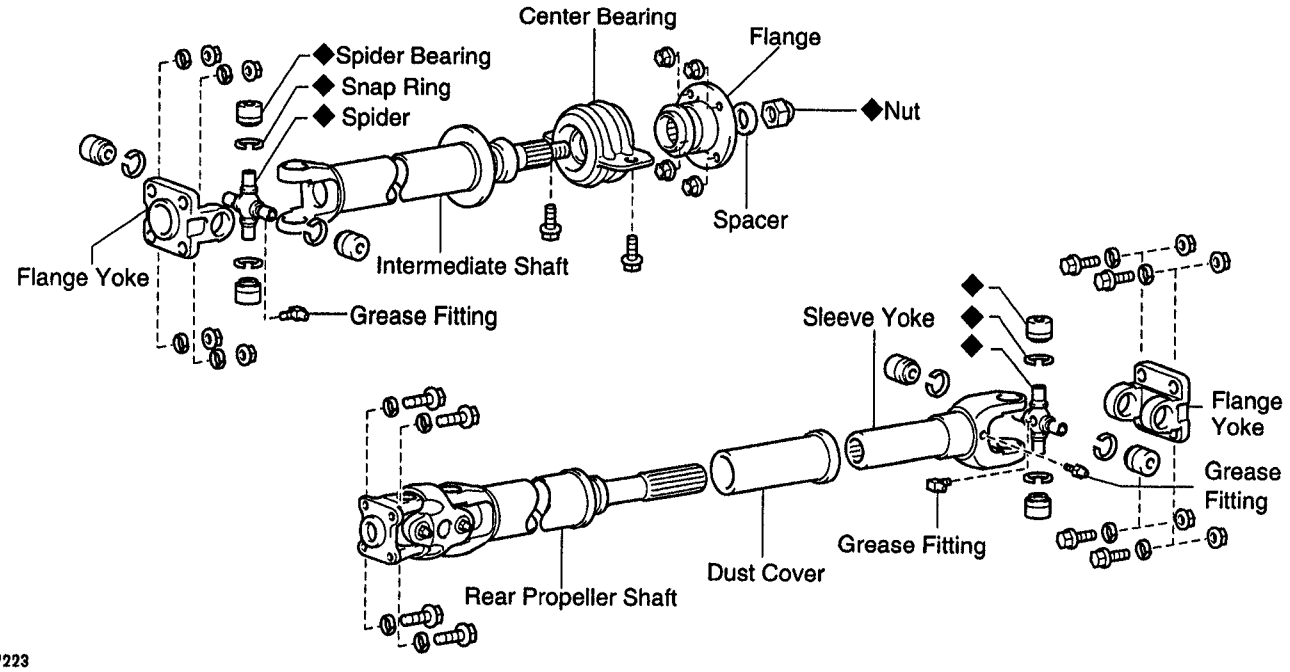

007223

◆ Non-reusable part

Y Z16693

PR

PR06H-02

PROPELLER SHAFT REMOVAL
2WD:

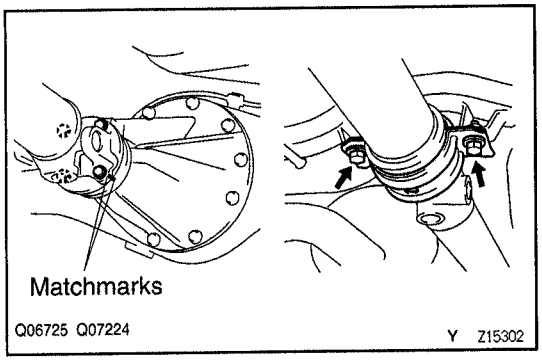

REMOVE PROPELLER SHAFT

(a) Place matchmarks on the propeller shaft and differential flanges.

(b) Remove the 4 nuts, bolts and washers.
Torque: 74 N·m (750 kgf·cm, 54 ft·lbf)

(c) 3–joint type:
Remove the 2 bolts and center support bearing from the frame crossmember.
Torque: 36 N·m (370 kgf·cm, 27 ft·lbf)

(d) Pull the yoke from the transmission.

(e) Insert SST in the transmission to prevent oil leakage.
SST 09325–20010 (2–joint type)
09325–40010 (3–joint type)

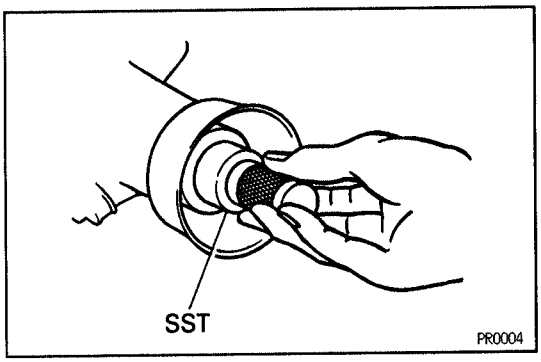

PR06J-02

PROPELLER SHAFT REMOVAL
4WD:

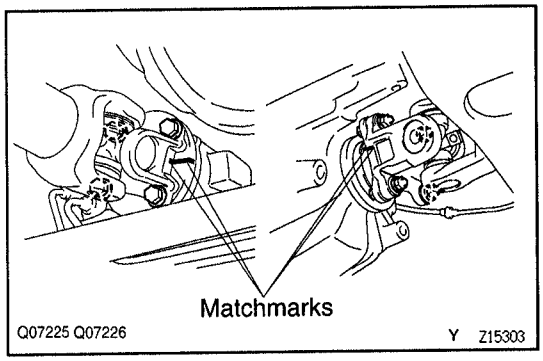

1. REMOVE FRONT PROPELLER SHAFT

(a) Place matchmarks on the propeller shaft and differential flanges.

(b) Remove the 4 nuts, bolts and washers.
Torque: 74 N·m (750 kgf·cm, 54 ft·lbf)

(c) Suspend the front side of the propeller shaft.

(d) Place matchmarks on the propeller shaft and transfer flanges.

(e) Remove the 4 nuts and washers.
Torque: 74 N·m (750 kgf·cm, 54 ft·lbf)

(f) Remove the front propeller shaft.

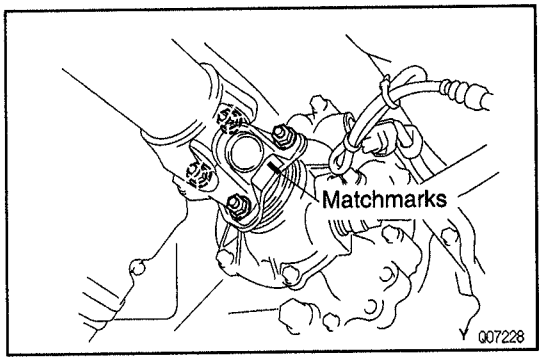

2. REMOVE REAR PROPELLER SHAFT

(a) Place matchmarks on the propeller shaft and transfer flanges.

(b) Remove the 4 nuts and washers.
Torque: 74 N·m (750 kgf·cm, 54 ft·lbf)

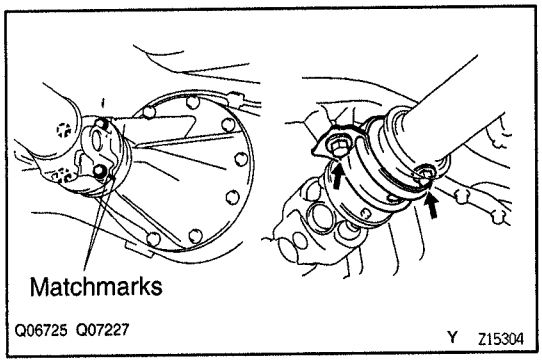

(c) Place matchmarks on the propeller shaft and differential flanges.

(d) Remove the 4 nuts, bolts and washers.
Torque: 74 N·m (750 kgf·cm, 54 ft·lbf)

(e) 3–joint type:
Remove the 2 bolts and center support bearing from the frame crossmember.
Torque: 36 N·m (370 kgf·cm, 27 ft·lbf)

(f) Remove the rear propeller shaft.

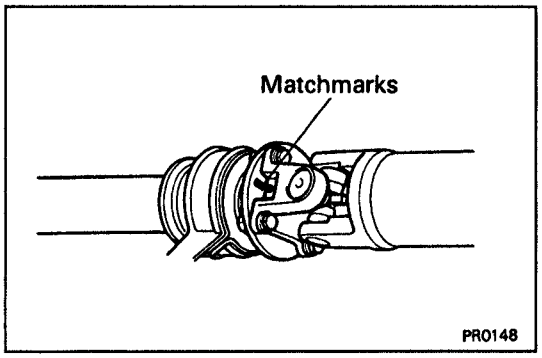

PR06K-01

PROPELLER SHAFT DISASSEMBLY

1. SEPARATE PROPELLER SHAFT AND INTERMEDIATE SHAFT

(a) Place matchmarks on the flanges.

(b) Remove the 4 nuts, bolts and washers.

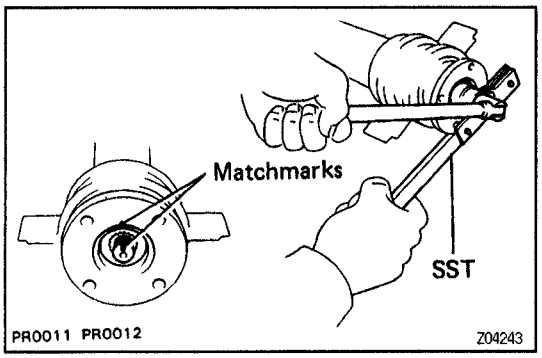

2. REMOVE CENTER SUPPORT BEARING FROM INTERMEDIATE SHAFT

(a) Using a chisel and hammer, loosen the staked part of the nut.

(b) Using SST to hold the flange, remove the nut.
SST 09930–00021

(c) Place matchmarks on the flange and shaft.

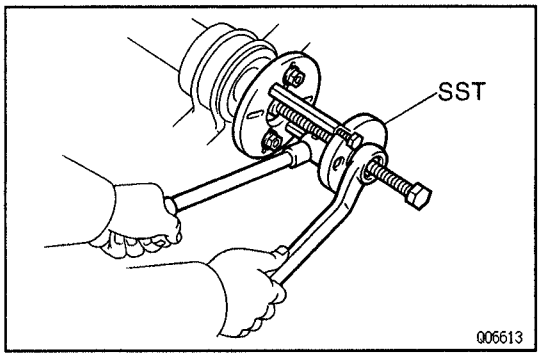

(d) Using SST, remove the flange from the intermediate shaft.
SST 09950–30010 (09951–03010, 09953–03010, 09954–03010, 09955–03030, 09956–03020)

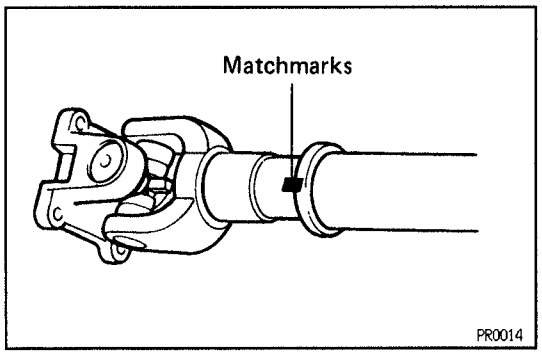

3. 4WD:
REMOVE SLEEVE YOKE FROM PROPELLER SHAFT

(a) Place matchmarks on the sleeve yoke and shaft.

(b) Pull out the sleeve yoke from the shaft.

(c) Remove the dust cover from the shaft.

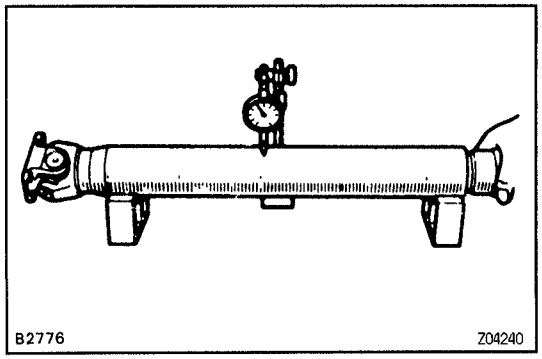

PR024-05

PROPELLER SHAFT INSPECTION

1. INSPECT PROPELLER SHAFT AND INTERMEDIATE SHAFTS FOR DAMAGE OR RUNOUT

Using a dial indicator, check the runout of shafts.
Maximum runout: 0.8 mm (0.031 in.)

If shaft runout is greater than maximum, replace the shaft.

PR

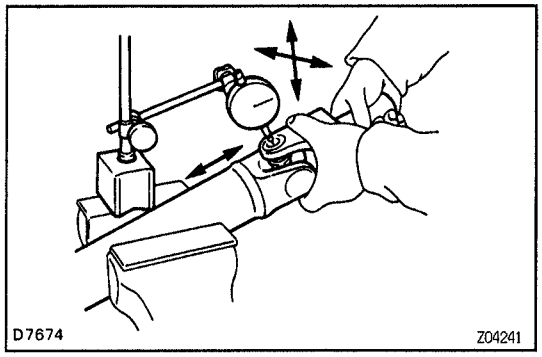

2. INSPECT SPIDER BEARINGS

- Inspect the spider bearings for wear or damage.
- Using a dial indicator, check the spider bearing axial play by turning the yoke while holding the shaft tightly.

Bearing axial play:

w/o double cardan joint propeller shaft

Maximum 0.05 mm (0.0020 in.)

If necessary, replace the spider bearing.

Bearing axial play:

w/ double cardan joint propeller shaft

Maximum 0.05 mm (0.0020 in.)

If necessary, replace the propeller shaft.

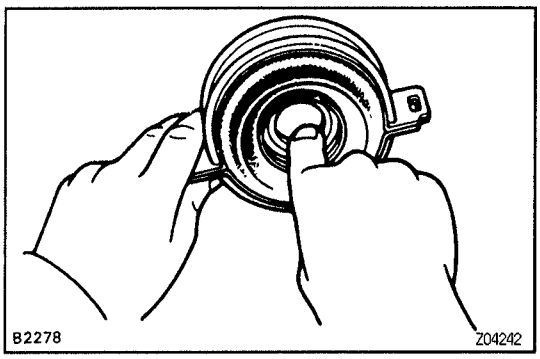

3. INSPECT CENTER SUPPORT BEARING FOR WEAR OR DAMAGE

- Check that the bearing turns freely.

If the bearing is damaged, worn, or does not turn freely, replace it.

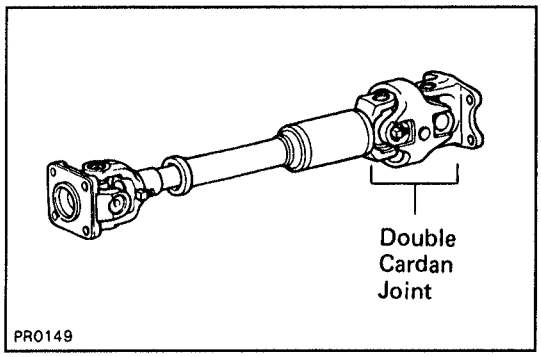

4. INSPECT WITH DOUBLE CARDAN JOINT PROPELLER SHAFT

HINT: Double cardan joint is used on 4WD rear propeller shafts.

- Inspect the shaft for wear or damage.
- Inspect the double cardan joint for wear or damage.

If any problem is found, replace the propeller shaft assembly.

SPIDER BEARING REPLACEMENT

PR06L-02

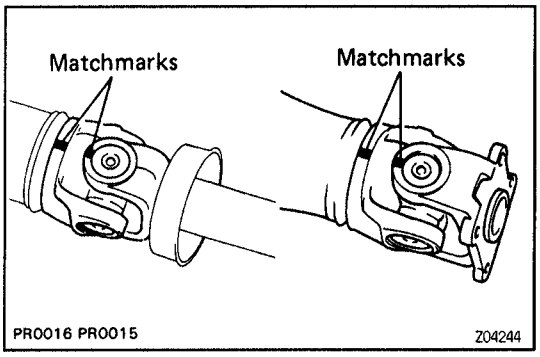

1. PLACE MATCHMARKS ON SHAFT AND YOKE

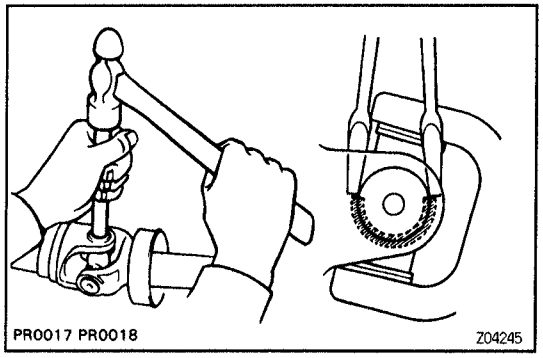

2. REMOVE SNAP RINGS

TMC–made:

(a) Using a brass bar and hammer, slightly tap in the bearing outer races.

(b) Using 2 screwdrivers, remove the 4 snap rings from the grooves.

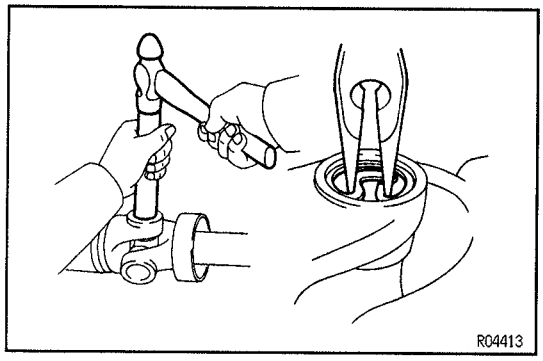

DANA–made:

(a) Using a brass bar and hammer, slightly tap in the bearing outer races.

(b) Using pliers, remove the 4 snap rings from the grooves.

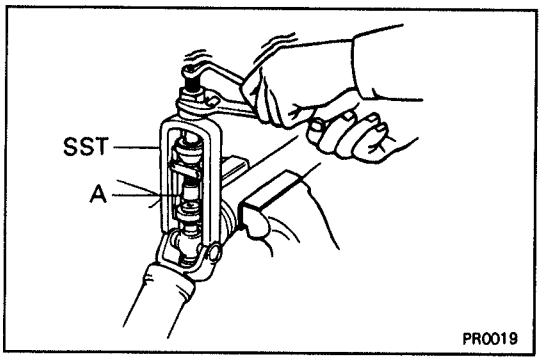

3. REMOVE SPIDER BEARINGS

(a) Using SST, push out the bearing from the propeller shaft.
SST 09332–25010
HINT: Sufficiently raise the part indicated by A so that it does not come into contact with the bearing.

(b) Clamp the bearing outer race in a vise and tap off the propeller shaft with a hammer.
HINT: Remove the bearing on opposite side in the same procedure.

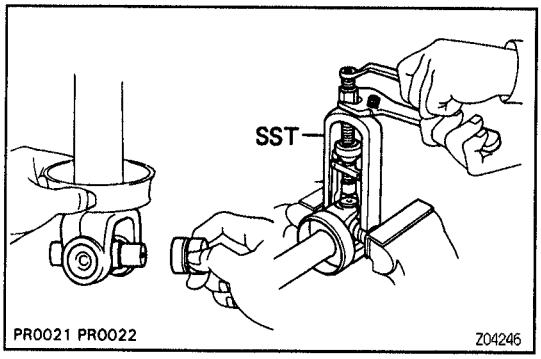

(c) Install the 2 removed bearing outer races to the spider.

(d) Using SST, push out the bearing from the yoke.
SST 09332–25010

(e) Clamp the outer bearing race in a vise and tap off the yoke with a hammer.
HINT: Remove the bearing on the opposite side in the same procedure.

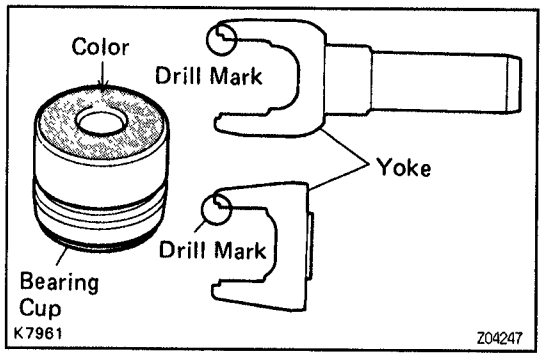

4. SELECT SPIDER BEARING

Select the bearing according to whether or not there is a drill mark on the yoke section.

Yoke	Bearing
With drill mark	With color mark (Red)
No drill mark	No color mark

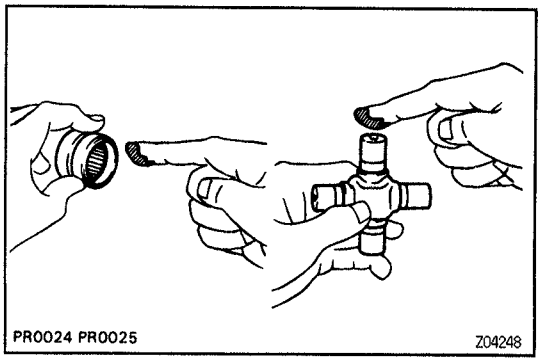

5. INSTALL SPIDER BEARINGS

(a) Apply MP grease to a new spider and bearings.
NOTICE: Be careful not to apply too much grease.

(b) Align the matchmarks on the yoke and shaft.

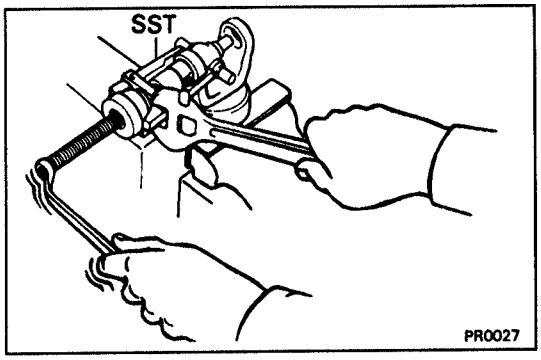

(c) Fit the spider into the yoke.
(d) Using SST, install new bearings on the spider.
SST 09332–25010

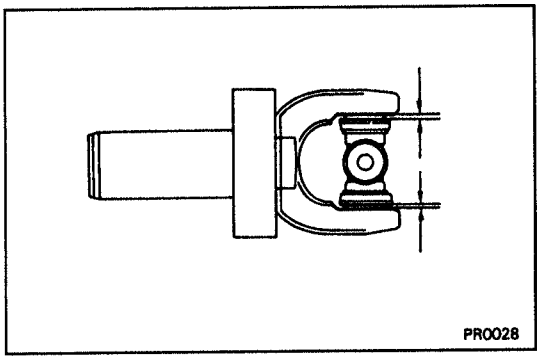

(e) Using SST, adjust both bearings so that the snap ring grooves are at maximum and equal widths.

6. INSTALL SNAP RINGS

(a) Install 2 new snap rings of equal thickness which will allow 0–0.05 mm (0–0.0020 in.) axial play.
HINT: Do not reuse the snap rings.

• **TMC**

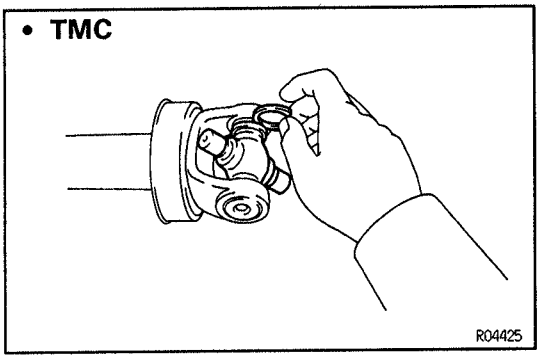

TMC–made:

Color	Mark	Thickness mm (in.)
–	1	2.100 – 2.150 (0.0827 – 0.0846)
–	2	2.150 – 2.200 (0.0846 – 0.0866)
–	3	2.200 – 2.250 (0.0866 – 0.0886)
Brown	–	2.250 – 2.300 (0.0886 – 0.0906)
Blue	–	2.300 – 2.350 (0.0906 – 0.0925)
–	6	2.350 – 2.400 (0.0925 – 0.0945)
–	7	2.400 – 2.450 (0.0945 – 0.0965)
–	8	2.450 – 2.500 (0.0965 – 0.0984)

V01997

• **DANA**

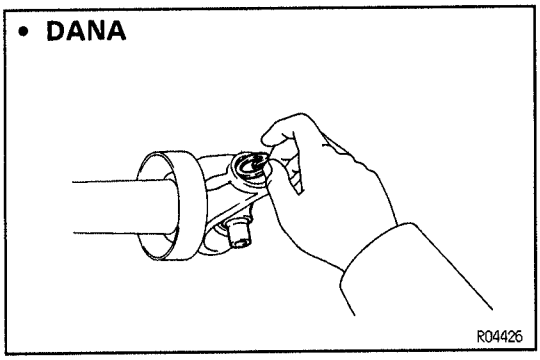

DANA–made:

Color	Thickness mm (in.)
Green	1.384 (0.0545)
Red	1.435 (0.0565)
Black	1.486 (0.0585)
Copper	1.511 (0.0595)
Silver	1.537 (0.0605)
Yellow	1.588 (0.0625)
Blue	1.638 (0.0645)

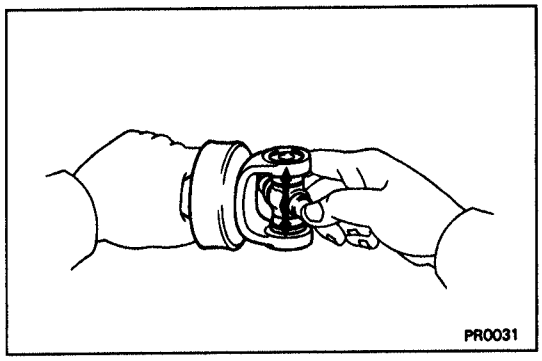

(b) Using a hammer, tap the yoke until there is no clearance between the bearing outer race and snap ring.

7. CHECK SPIDER BEARING

- Check that the spider bering moves smoothly.
- Check the spider bearing axial play.

Bearing axial play: Maximum 0.05 mm (0.0020 in.)

HINT: Install new spider bearings on the shaft side in the procedure described above.

HINT: When replacing the rear propeller shaft spider on 4WD vehicles, be sure that the grease fitting assembly hole is facing in the direction shown in the illustration.

SPIDER GREASE FITTING ASSEMBLY DIRECTION FOR 4WD FRONT PROPELLER SHAFT

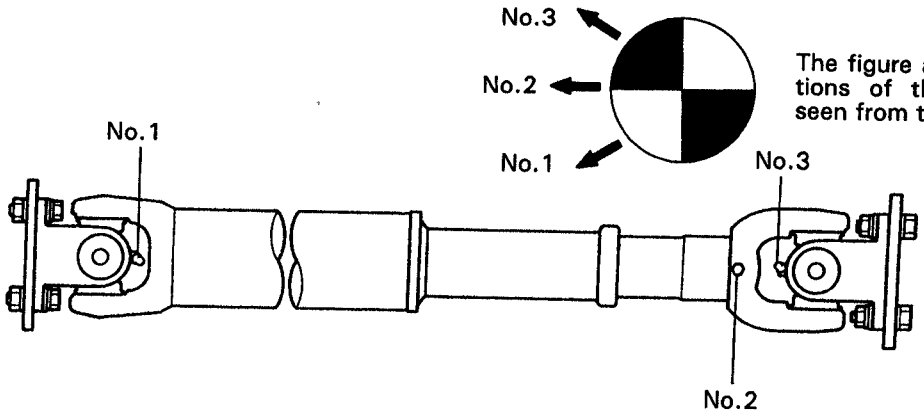

The figure at left shows the locations of the grease fittings as seen from the rear.

SPIDER GREASE FITTING ASSEMBLY DIRECTION FOR 4WD REAR PROPELLER SHAFT 2-JOINT TYPE

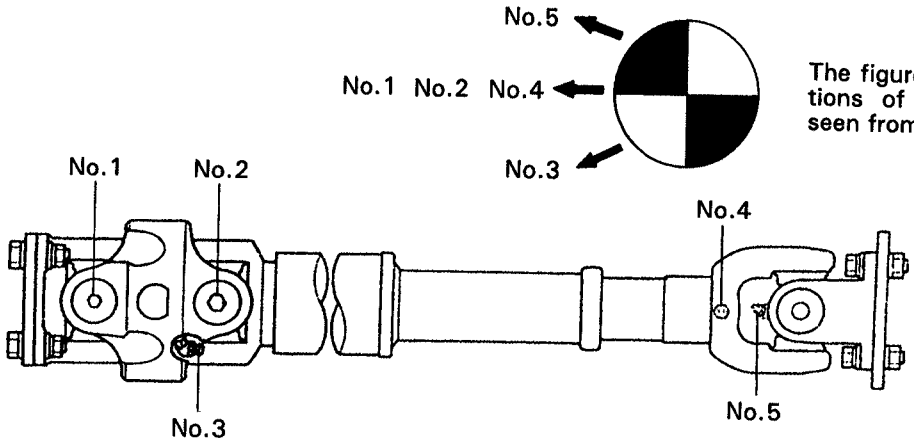

The figure at left shows the locations of the grease fittings as seen from the rear.

SPIDER GREASE FITTING ASSEMBLY DIRECTION FOR 4WD REAR PROPELLER SHAFT 3-JOINT TYPE

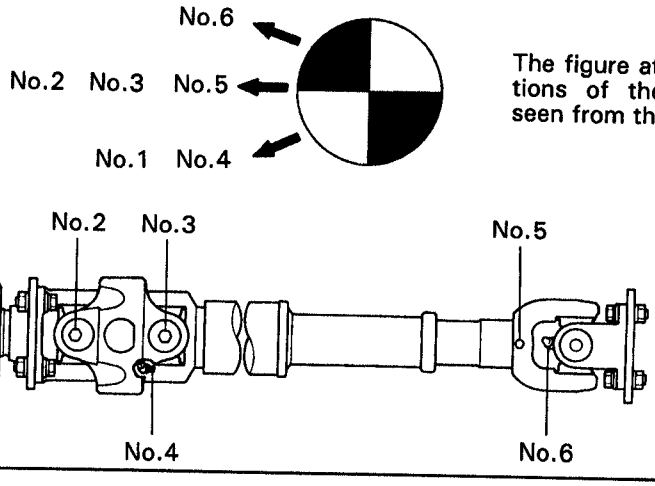

The figure at left shows the locations of the grease fittings as seen from the rear.

Q07229
Q07230
Q07231

Z15305

PR08L–01

PROPELLER SHAFT ASSEMBLY

HINT: When replacing the propeller shaft, install the new parts facing, as shown in the illustration.

2WD
3-Joint Type

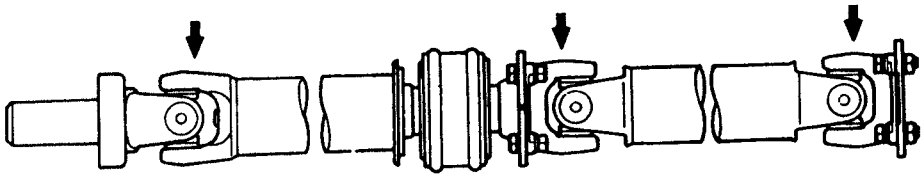

4WD Front

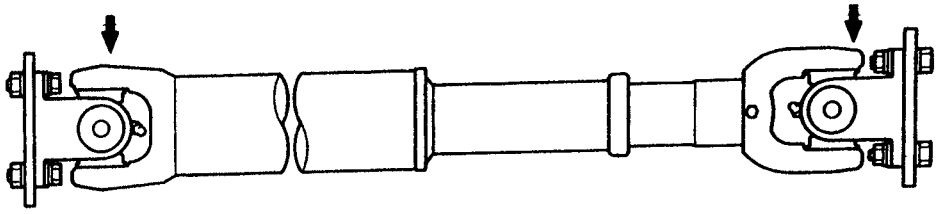

4WD Rear
2-Joint Type

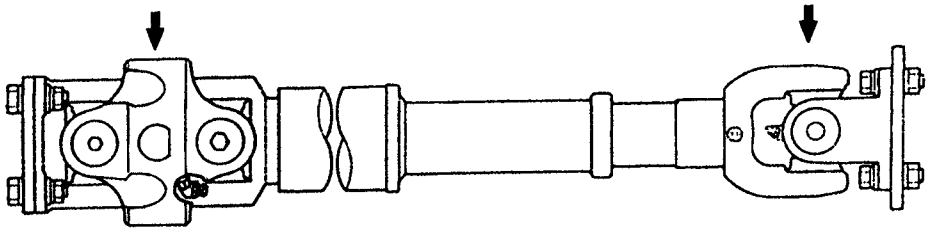

4WD Rear
3-Joint Type

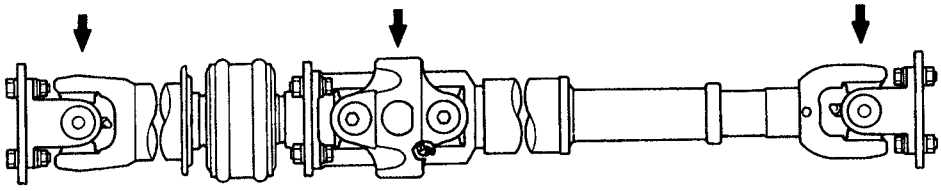

Q07232
Q07229
Q07230
Q07231

Z15306

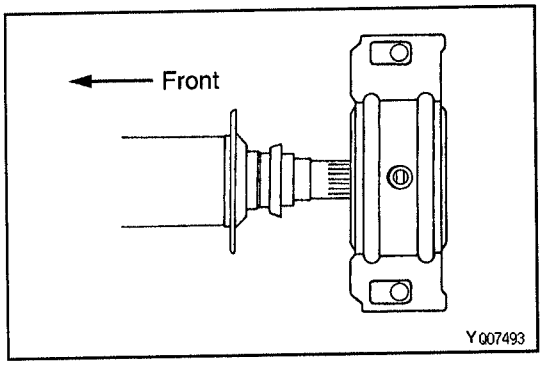

1. **INSTALL CENTER SUPPORT BEARING ON INTERMEDIATE SHAFT**

HINT: Install the center support bearing with the cutout toward the rear.

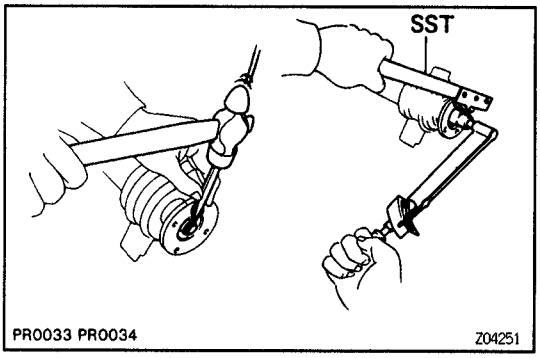

2. INSTALL FLANGE ON INTERMEDIATE SHAFT

(a) Coat the splines of the intermediate shaft with MP grease.

(b) Place the flange on the shaft and align the matchmarks.

HINT: If replacing either the center flange or intermediate shaft, reassemble them so that the front flange yoke of the intermediate shaft and the rear flange yoke of the propeller shaft are facing in the same direction.

(c) Using SST to hold the flange, press the bearing into position by tightening down a new nut.

SST 09930–00021

Torque: 181 N·m (1,850 kgf·cm, 134 ft·lbf)

(d) Loosen the nut.

(e) Torque the nut again.

Torque: 69 N·m (700 kgf·cm, 51 ft·lbf)

(f) Using a chisel and hammer, stake the nut.

3. INSTALL PROPELLER SHAFT

(a) Align the matchmarks on the flanges and connect the flanges with 4 bolts, washers and nuts.

HINT: If replacing either the center flange or intermediate shaft, reassemble them so that the front flange yoke of the intermediate shaft and the rear flange yoke of the propeller shaft are facing in the same direction.

(b) Torque the bolts.

Torque: 74 N·m (750 kgf·cm, 54 ft·lbf)

4. 4WD:

INSERT SLEEVE YOKE INTO PROPELLER SHAFT

(a) Apply grease to the propeller shaft spline and sleeve yoke sliding surface.

Grease: Molybdenum disulfide lithium base chassis grease, NLGI No.2.

(b) Install the dust cover to the shaft.

(c) Align the matchmarks on the yoke and propeller shaft.

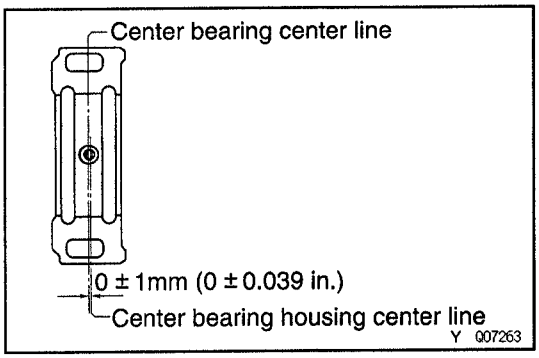

PR08M-01

PROPELLER SHAFT INSTALLATION 2WD:

Installation is in the reverse order of removal.

HINT 3–joint type:

- Center bearing center line and the center bearing housing center line must be adjusted within ±1 mm of each other in the vehicles longitudinal direction when the veicle is unloaded.
- When adjusting the center bearing housing center line, it should be perpendicular to the axis of front propeller shaft.

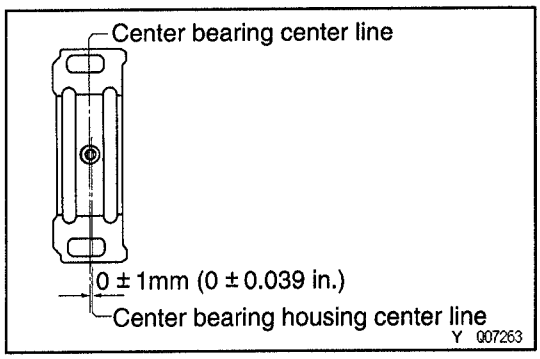

PR08N-01

PROPELLER SHAFT INSTALLATION 4WD:

Installation is in the reverse order of removal.

HINT: Rear propeller shaft 3–joint type:

- Center bearing center line and the center bearing housing center line must be adjusted within ±1 mm of each other in the vehicles longitudinal direction when the veicle is unloaded.
- When adjusting the center bearing housing center line, it should be perpendicular to the axis of front propeller shaft.

HINT: With a grease gun, pump grease into each fitting until it begins to flow around the oil seal.

Grease:

Spiders:

Lithium base chassis grease, NLGI No.2.

Sleeve yoke and double cardan joint:

Molybdenum disulfide lithium base chassis grease, NLGI No.2.

SERVICE SPECIFICATIONS

SERVICE DATA

PR013–0E

Propeller shaft runout			Maximum	0.8 mm (0.031 in.)
Spider bearing axial play				0.05 mm (0.0020 in.)
Spider bearing selection			Mark	
Bearing cup outer diameter			None	29.008 – 29.021 mm (1.1420 – 1.1426 in.)
			Red	29.028 – 29.041 mm (1.1428 – 1.1433 in.)
Bearing hole inner diameter			None	29.000 – 29.020 mm (1.1417 – 1.1425 in.)
			Drill	29.021 – 29.042 mm (1.1426 – 1.1434 in.)
Snap ring thickness	TMC–made	mark	color	
		1	–	2.100 – 2.150 mm (0.0827 – 0.0846 in.)
		2	–	2.150 – 2.200 mm (0.0846 – 0.0866 in.)
		3	–	2.200 – 2.250 mm (0.0866 – 0.0886 in.)
		–	Brown	2.250 – 2.300 mm (0.0886 – 0.0906 in.)
		–	Blue	2.300 – 2.350 mm (0.0906 – 0.0925 in.)
		6	–	2.350 – 2.400 mm (0.0925 – 0.0945 in.)
		7	–	2.400 – 2.450 mm (0.0945 – 0.0965 in.)
		8	–	2.450 – 2.500 mm (0.0965 – 0.0984 in.)
	DANA–made		color	
			Green	1.384 mm (0.0545 in.)
			Red	1.435 mm (0.0565 in.)
			Black	1.486 mm (0.0585 in.)
			Copper	1.511 mm (0.0595 in.)
			Silver	1.537 mm (0.0605 in.)
			Yellow	1.588 mm (0.0625 in.)
			Blue	1.638 mm (0.0645 in.)

PR

TORQUE SPECIFICATIONS

PR014–0B

Part tightened		N·m	kgf·cm	ft·lbf
Front differential x Front propeller shaft	4WD	74	750	54
Front propeller shaft x Transfer	4WD	74	750	54
Propeller shaft x Rear differential	4WD	74	750	54
Propeller shaft x Transfer	4WD	74	750	54
Intermediate shaft x Propeller shaft	4WD	74	750	54
Propeller shaft x Differential	2WD	74	750	54
Intermediate shaft x Propeller shaft	2WD	74	750	54
Center support bearing x Frame		36	370	27
Intermediate shaft x Center bearing x Joint flange	4WD			
	1st	181	1,850	134
	2nd		Loosen nut	
	3rd	69	700	51

PR

SUSPENSION AND AXLE

TROUBLESHOOTING ..... SA– 2
GENERAL INSPECTION ..... SA– 2
WHEEL ALIGNMENT ..... SA– 3
(2WD) ..... SA– 3
WHEEL ALIGNMENT ..... SA– 8
(4WD) ..... SA– 8
FRONT AXLE SA–12
(2WD) SA–12
PREPARATION SA–12
FRONT AXLE HUB AND STEERING KNUCKLE SA–13
FRONT AXLE SA–18
(4WD) SA–18
PREPARATION SA–18
FRONT AXLE HUB SA–21
FREE WHEEL HUB SA–26
FRONT DRIVE SHAFT SA–27
PREPARATION SA–27
FRONT DRIVE SHAFT SA–28
FRONT DIFFERENTIAL SA–33
PREPARATION SA–33
ON–VEHICLE REPAIR SA–38
ASSEMBLY REMOVAL AND INSTALLATION SA–41
DIFFERENTIAL CARRIER SA–43
A.D.D. CONTROL SYSTEM SA–60
FRONT SUSPENSION SA–64
(2WD) SA–64
PREPARATION SA–64
FRONT SHOCK ABSORBER SA–65
UPPER SUSPENSION ARM SA–66
LOWER SUSPENSION ARM AND COIL SPRING SA–69
LOWER BALL JOINT SA–72
STABILIZER BAR SA–73
FRONT SUSPENSION SA–75
(4WD) SA–75
PREPARATION SA–75
FRONT SHOCK ABSORBER SA–77
UPPER SUSPENSION ARM SA–81
LOWER SUSPENSION ARM SA–82
UPPER AND LOWER BALL JOINT SA–84
STABILIZER BAR SA–87
REAR AXLE SA–89
PREPARATION SA–89
REAR AXLE SHAFT SA–91
REAR DIFFERENTIAL SA–97
PREPARATION SA–97
ON–VEHICLE REPAIR SA–102
ASSEMBLY REMOVAL AND INSTALLATION SA–106
DIFFERENTIAL CARRIER SA–108
(2RZ–FE) SA–108
DIFFERENTIAL CARRIER SA–120
(3RZ–FE, 5VZ–FE w/o Diff. Lock) SA–120
DIFFERENTIAL CARRIER SA–133
(3RZ–FE, 5VZ–FE w/ Diff. Lock) SA–133
DIFFERENTIAL LOCKING SYSTEM SA–149
REAR SUSPENSION SA–155
PREPARATION SA–155
REAR SHOCK ABSORBER SA–156
REAR LEAF SPRING SA–158
SERVICE SPECIFICATIONS SA–161

TROUBLESHOOTING

SA06G-07

Use the table below to help you find the cause of the problem. The numbers indicate the priority of the likely cause of the problem. Check each part in order. If necessary, replace these parts.

See Page / Parts Name / Trouble	Tires	Cold tire inflation pressure	Wheel alignment	Springs	Stabilizer bar	Shock absorber	Ball joint	Hub bearings	Steering linkage	Steering gear	Suspension parts	Overloaded	Wheel balance
See Page	I								I	I	I	I	I
Wander/pulls	1		2					4	3	5	6		
Bottoming				2		3						1	
Sways/pitches	1				2	3							
Front wheel shimmy	1		4			3	5	6	7	8			2
Abnormal tire wear		1	2			4					3		

V00313

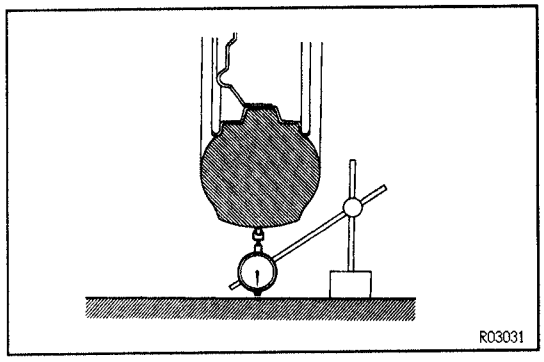

R03031

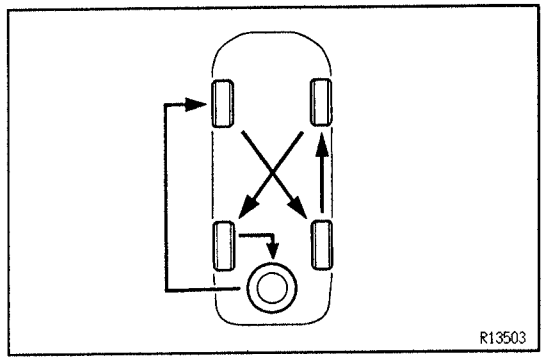

R13503

GENERAL INSPECTION

SA27F-01

1. INSPECT TIRE

(a) Check the tires for wear and for the proper inflation pressure.

Cold tire inflation pressure

Tire size	Front kPa (kgf/cm², psi)	Rear kPa (kgf/cm², psi)
P195/75R14	200 (2.0, 29)	240 (2.4, 35)
P215/70R14	200 (2.0, 29)	200 (2.0, 29)
P225/75R15 31 x 10.5R 15LT	180 (1.8, 26)	200 (2.0, 29)

(b) Check the tire runout.

Tire runout:

Less than 3.0 mm (0.118 in.)

2. ROTATE TIRE

HINT: See the illustration for where to rotate each tire when you include the spare tire in rotation.

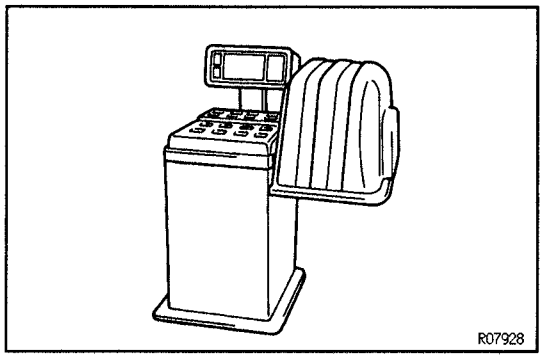

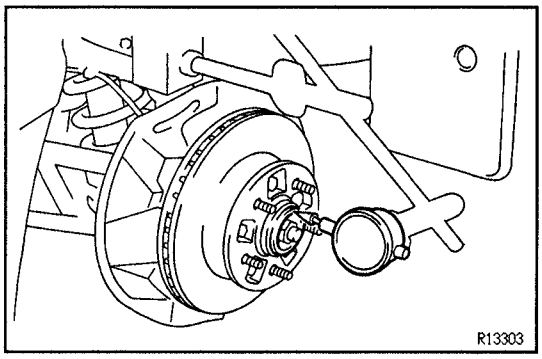

3. INSPECT WHEEL BALANCE

(a) Check and adjust the Off–the–car balance.

(b) If necessary, check and adjust the On–the–car balance.

Unbalance after adjustment:

2WD 11.0 g (0.024 lb) or less

4WD 14.0 g (0.031 lb) or less

4. 2WD:

CHECK WHEEL BEARING LOOSENESS

Check the backlash in bearing shaft direction.

Maximum: 0.05 mm (0.0020 in.)

5. CHECK FRONT SUSPENSION FOR LOOSENESS

6. CHECK STEERING LINKAGE FOR LOOSENESS

7. CHECK BALL JOINT FOR LOOSENESS

8. CHECK SHOCK ABSORBER WORKS PROPERLY

- Check for oil leak.
- Check the mounting bushings for wear.
- Bounce front and rear of the vehicle.

WHEEL ALIGNMENT (2WD)

SA1R8–04

HINT: With non–loaded vehicles, there is a difference in the vehicle height according to the model.

Although the wheel alignment standard value changes according to the vehicle height, by setting the vehicle height to the standard height the standard alignment value becomes the same for all models.

For the vehicle height of non–loaded vehicles for each model and the alighment standard values, refer to page SA–161.

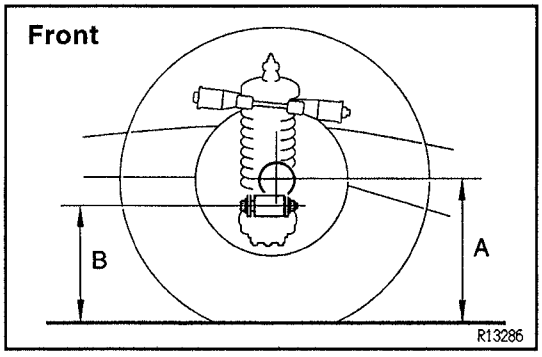

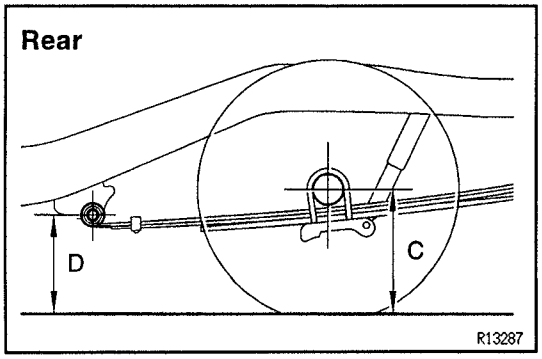

1. MEASURE VEHICLE HEIGHT

Vehicle height:

Front: A–B=56 mm (2.205 in.)

Rear: C–D=108 mm (4.252 in.)

Measuring points:

A: Ground clearance of spindle center.

B: Ground clearance of lower suspension arm bolt center.

C: Ground clearance of rear axle shaft center.

D: Ground clearance of leaf spring front hanger pin center.

NOTICE: Before inspecting the wheel alignment, adjust the vehicle height to specification.

If the vehicle height is not within the specification, try to adjust it by pushing down on or lifting the body.

SA

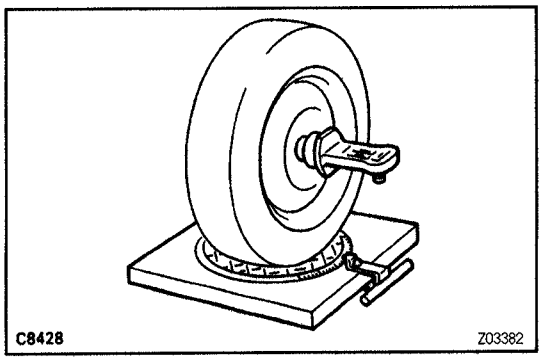

2. INSTALL CAMBER–CASTER–KINGPIN GAUGE OR ONTO WHEEL ALIGNMENT TESTER

Follow the specific instructions of the equipment manufacturer.

3. INSPECT CAMBER, CASTER AND STEERING AXIS INCLINATION

Camber	0°00′ ± 45′
Left–right error	30′ or less
Caster	1°50′ ± 45′
Left–right error	30′ or less
Steering axis inclination	10°00′ ± 45′
Left–right error	30′ or less

If the steering axis inclination is not within the specification, after camber and caster have correctly adjusted, recheck the steering knuckle front wheel for bearing or looseness.

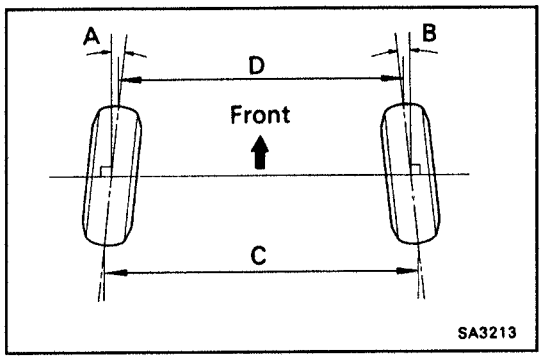

4. INSPECT TOE–IN

Toe–in (Total)	A+B= 0° ± 0.2°
	C–D= 0 ± 2 mm (0 ± 0.08 in.)

If the toe–in is not within the specification, adjust the rack ends.

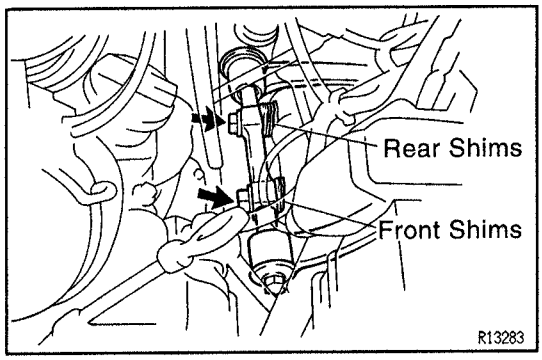

5. ADJUST CAMBER AND CASTER

Camber	0°00′ ± 30′
Left–right error	30′ or less
Caster	1°50′ ± 30′
Left–right error	30′ or less

(a) Loosen the upper suspension arm set bolts.

(b) Adjust the camber and caster by adding or removing shims.

(See adjustment chart)

Shim thickness

4.0 mm (0.157 in.)	1.6 mm (0.063 in.)	1.2 mm (0.047 in.)

(c) Torque the upper suspension arm set bolts

Torque: 130 N·m (1,300 kgf·cm, 94 ft·lbf)

NOTICE: Adjust the shim thickness to 7 mm (+4, –3), and adjust the difference between the front and rear of the upper suspension arm shaft to within 4 mm.

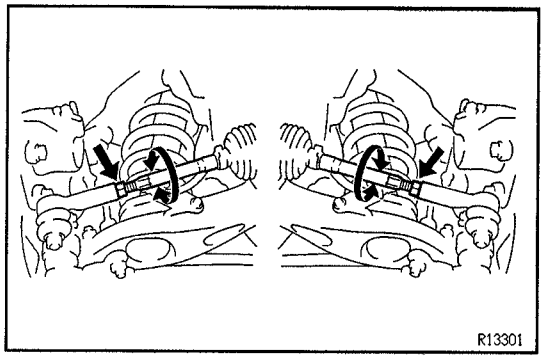

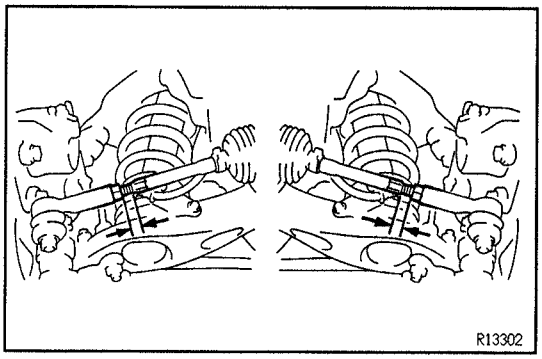

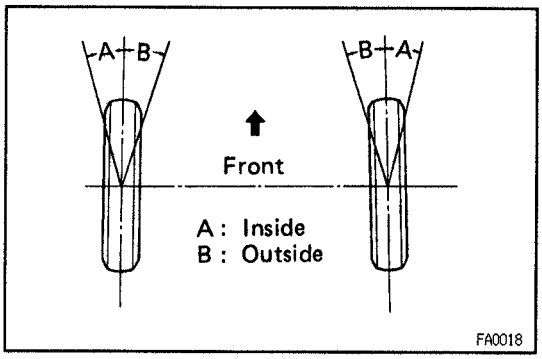

6. ADJUST TOE–IN

(a) Remove the boot clamps.

(b) Loosen the rack end lock nuts.

(c) Turn the left and right rack ends an amount to adjust the toe–in.

Toe–in (Total)	A+B= 0° ± 0.1° C–D= 0 ± 1 mm (0 ± 0.04 in.)

HINT: Ensure that the lengths of the left and right tie rods are the same.

Tie rod end length left–right error:

Less than 1.5 mm (0.059 in.)

(d) Tighten the rack end lock nut.

Torque: 54 N·m (550 kgf·cm, 40 ft·lbf)

(e) Place the boot on the seat and clip it.

HINT: Ensure that the boots are not twisted.

7. INSPECT WHEEL ANGLE

Wheel angle

Item	Inside wheel	Outside wheel (reference)
Max.	36°00′ (33°00′ ~ 36°00′)	30°45′ (27°45′ ~ 30°45′)

If the wheel angle differ from the standard specifications, check to see if the lengths of the left and right tie rods are the same.

HINT: If the tie rods lenghts are not equal, the wheel angle can not be adjusted properly.

Reinspect the toe–in after adjusting the tie rods lengths.

SA

SA16N–05

ADJUSTMENT CHART

Example:

o = Measurement Point

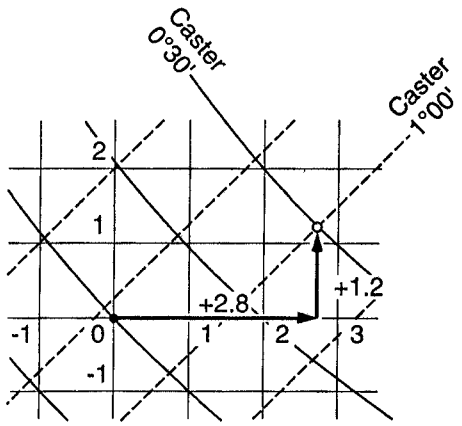

Y R13382

HOW TO READ ADJUSTMENT CHART

Standard loaded vehicle:

(a) Mark on the graph the measurements taken from the vehicle.

Example:

Camber 0°30'
Caster 1°00'

(b) As shown in the illustration, read from the graph the amounts by which the front and/or rear cams are to be adjusted.

Example:

Front shim thickness + 1.2 mm (0.047 in.)
Rear shim thickness + 2.8 mm (0.110 in.)

Example (RZN150L):

• = Standard value point
o = Measurement point

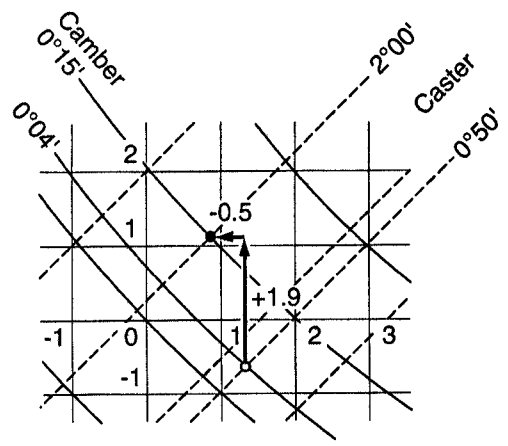

Y R13383

Non–loaded vehicle:

(a) Find the wheel alignment standard value applicable for the particular model in non–loaded condition. (See page SA–161)

(b) Mark the selected standard value on the adjustment chart.

Example (RZN150L):

Camber 0°04'
Caster 0°50'

(c) Mark on the adjustment chart the alignment values measured at the non–loaded vehicle height.

Example:

Camber 0°15'
Caster 2°00'

(d) As shown in the illustration, read the distance from the standard value to the measured value, and adjust the front and/or rear shim thickness accordingly.

Example:

Front shim thickness + 1.9 mm (0.075 in.)
Rear shim thickness – 0.5 mm (0.020 in.)

SA

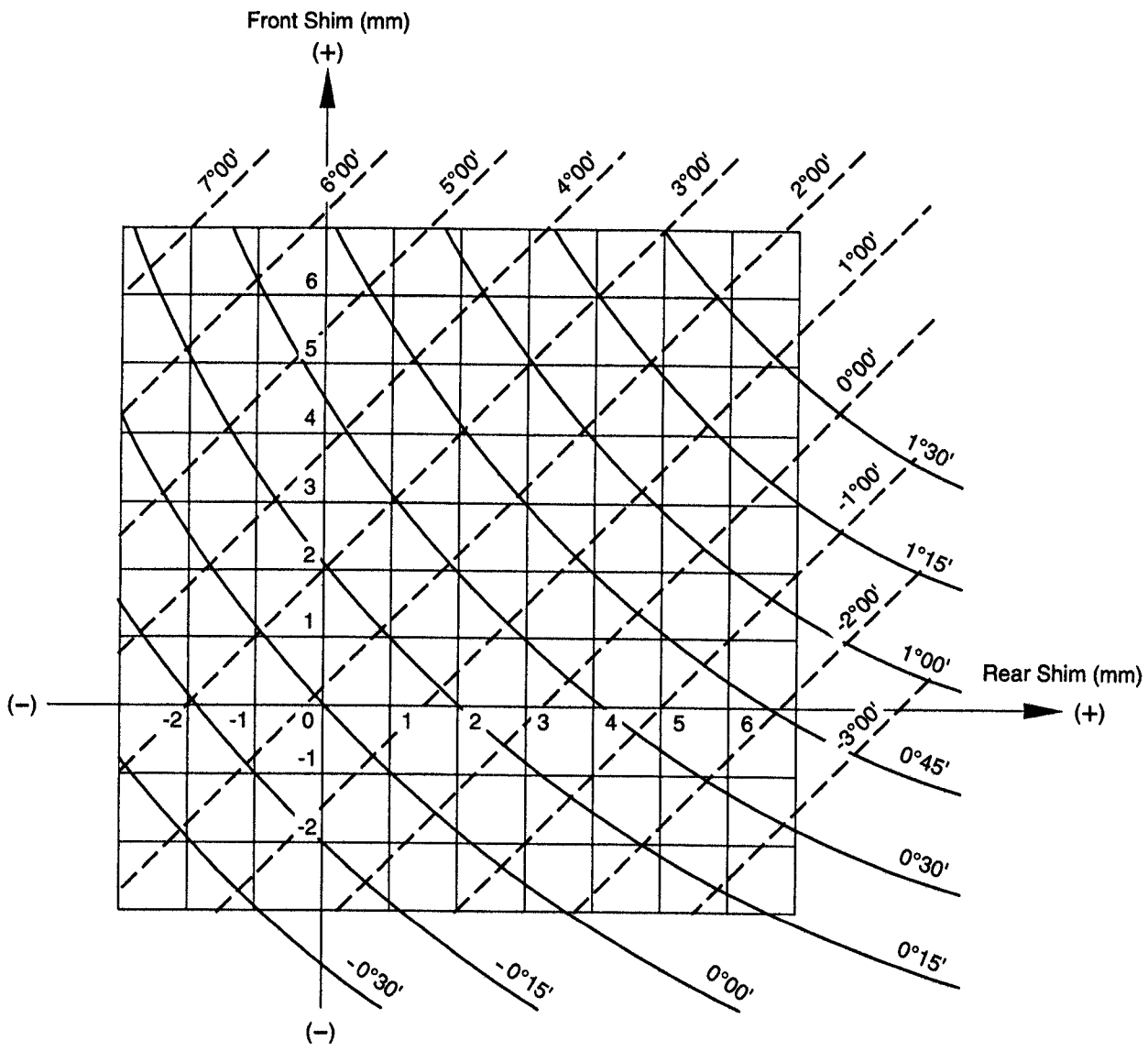
Camber
Caster
Front Shim (mm)
(+)
(–)
Rear Shim (mm)
(+)
(–)
7°00'
6°00'
5°00'
4°00'
3°00'
2°00'
1°00'
0°00'
-1°00'
-2°00'
-3°00'
1°30'
1°15'
1°00'
0°45'
0°30'
0°15'
0°00'
-0°15'
-0°30'
6
5
4
3
2
1
-1
-2
-2
-1
0
1
2
3
4
5
6
Y
R13388

SA

WHEEL ALIGNMENT (4WD)

SA1WA–02

HINT: With non–loaded vehicles, there is a difference in the vehicle height according to the model.
Although the wheel alignment standard value changes according to the vehicle height, by setting the vehicle height to the standard height the standard alignment value becomes the same for all models.
For the vehicle height of non–loaded vehicles for each model and the alignment standard values, refer to page SA–162, 163.

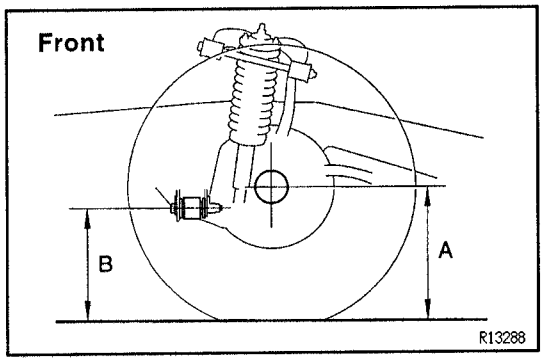

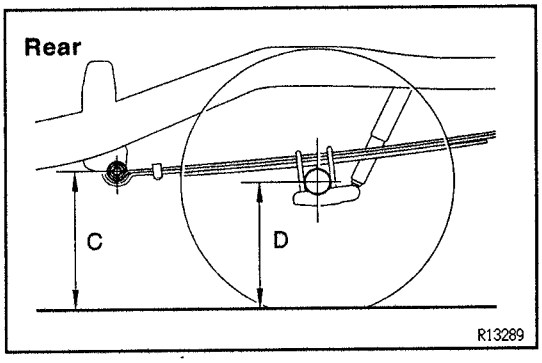

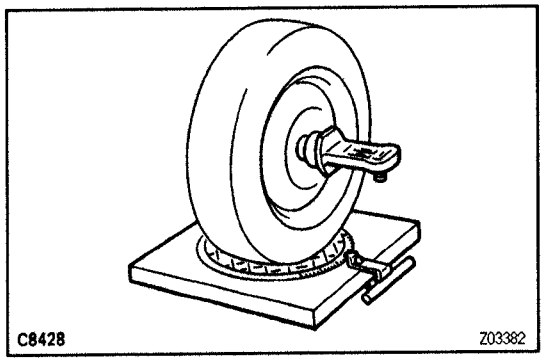

1. MEASURE VEHICLE HEIGHT

Vehicle height:

Front: A–B=57 mm (2.244 in.)

Rear: C–D=–5 mm (–0.197 in.)

Measuring points:

A: Ground clearance of spindle center.

B: Ground clearance of front adjusting cam bolt center.

C: Ground clearance of leaf spring front hanger pin center.

D: Ground clearance of rear axle shaft center.

NOTICE: Before inspecting the wheel alignment, adjust the vehicle height to specification.

If the vehicle height is not within the specification, try to adjust it by pushing down on or lifting the body.

2. INSTALL CAMBER–CASTER–KINGPIN GAUGE OR ONTO WHEEL ALIGNMENT TESTER

Follow the specific instructions of the equipment manufacturer.

3. INSPECT CAMBER, CASTER AND STEERING AXIS INCLINATION

Camber	0°00′ ± 45′
Left–right error	30′ or less
Caster	2°50′ ± 45′
Left–right error	30′ or less
Steering axis inclination	10°45′ ± 45′
Left–right error	30′ or less

If the steering axis inclination is not within the specification, after camber and caster have correctly adjusted, recheck the steering knuckle front wheel for bearing or looseness.

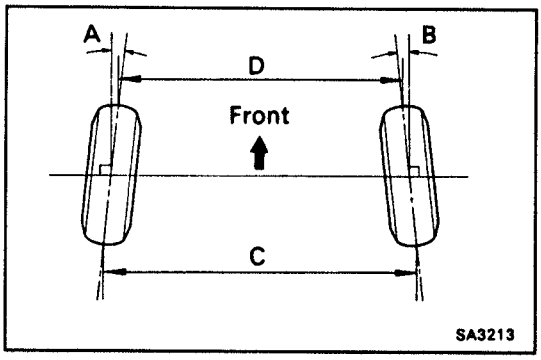

4. INSPECT TOE–IN

Toe–in (Total)	A+B= 0° ± 0.2° C–D= 0 ± 2 mm (0 ± 0.08 in.)

If the toe–in is not within the specification, adjust the rack ends.

5. ADJUST CAMBER AND CASTER

Camber	0°00′ ± 30′
Left–right error	30′ or less
Caster	2°50′ ± 30′
Left–right error	30′ or less

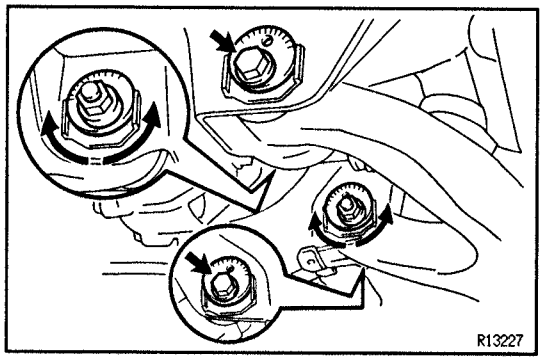

(a) Loosen the front and/or rear adjusting cam nuts.
(b) Adjust the camber and caster by front and/or rear adjusting cams.
(See adjustment chart)
(c) Torque the front and/or rear adjusting cam nuts.
Torque: 130 N·m (1,325 kgf·cm, 96 ft·lbf)

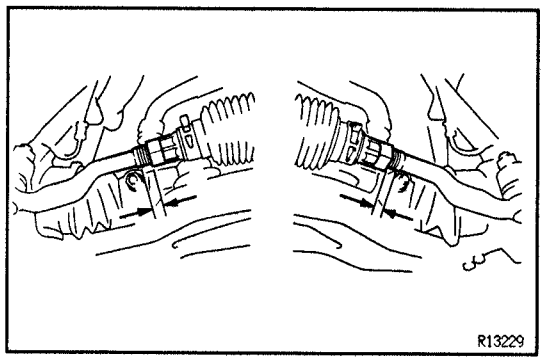

6. ADJUST TOE–IN AND WHEEL ANGLE

HINT: First, check or adjust the lengths of the tie rod ends, then adjust the toe–in.
Tie rod end length left–right error:
Less than 1.5 mm (0.059 in.)

(a) Remove the boot clamps.
(b) Loosen the rack end lock nuts.
(c) Turn the left and right rack ends an amount to adjust the toe–in.

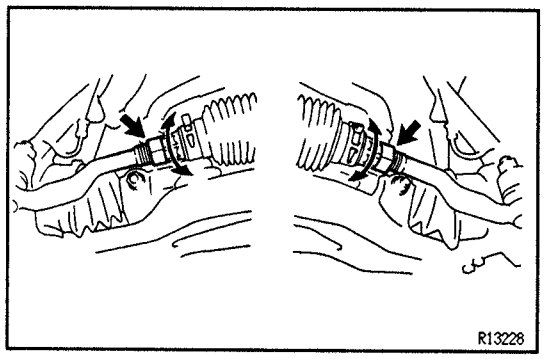

Toe–in (Total)	A+B= 0° ± 0.1° C–D= 0 ± 1 mm (0 ± 0.04 in.)

(d) Tighten the rack end lock nuts.
Torque: 55 N·m (560 kgf·cm, 41 ft·lbf)
(e) Place the boot on the seat and clip it.
HINT: Ensure that the boots are not twisted.

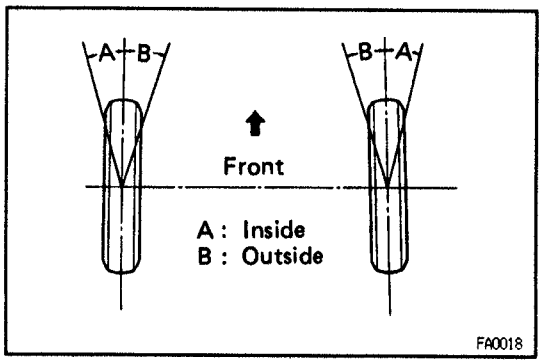

(f) Inspect the wheel angle.
Wheel angle

Item	Inside wheel	Outside wheel (reference)
Max.	37°05′ (35°05′ ~ 38°05′)	32°20′

If wheel angle deviates from the specifications, readjust the toe–in and wheel angle within the specifications. At this time, the lengths of the tie rod end may be within less than 1.5 mm (0.059 in.).

SA

SA1WC-01

ADJUSTMENT CHART

Example :

o = Measurement point

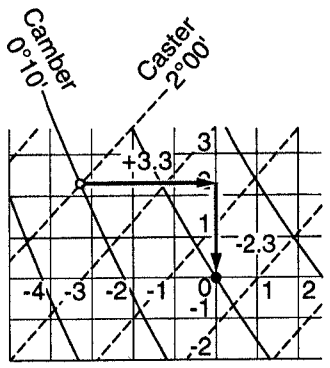

Y R13385

HOW TO READ ADJUSTMENT CHART

Standard loaded vehicle:

(a) Mark on the graph the measurements taken from the vehicle.

Example:

Camber 0°10'

Caster 2°00'

(b) As shown in the illustration, read from the graph the amounts by which the front and/or rear cams are to be adjusted.

Amount to turn adjusting cam (by graduation):

Front cam —(Shorter) 2.3

Rear cam +(Longer) 3.3

Example (VZN170L-CRMDKAB):

• = Standard value point

o = Measurement point

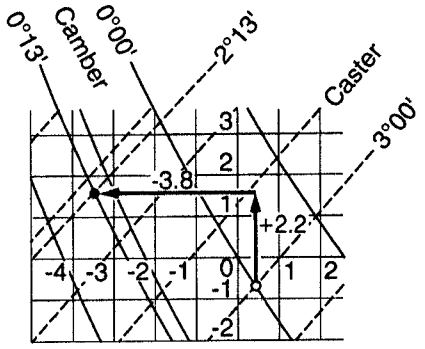

Y R13384

Non—loaded vehicle:

(a) Find the wheel alignment standard value applicable for the particular model in non—loaded condition. (See page SA—162, 163)

(b) Mark the selected standard value on the adjustment chart.

Example (RZN171L—CRMDKAB):

Camber 0° 13'

Caster 2° 13'

(c) Mark on the adjustment chart the alignment values measured at the non—loaded vehicle height.

Example:

Camber 0° 00'

Caster 3° 00'

(d) As shown in the illustration, read the distance from the standard value to the measured value, and adjust the front and/or rear adjusting cams accordingly.

Example:

Front cam +(Longer) 2.2

Rear cam —(Shorter) 3.8

SA

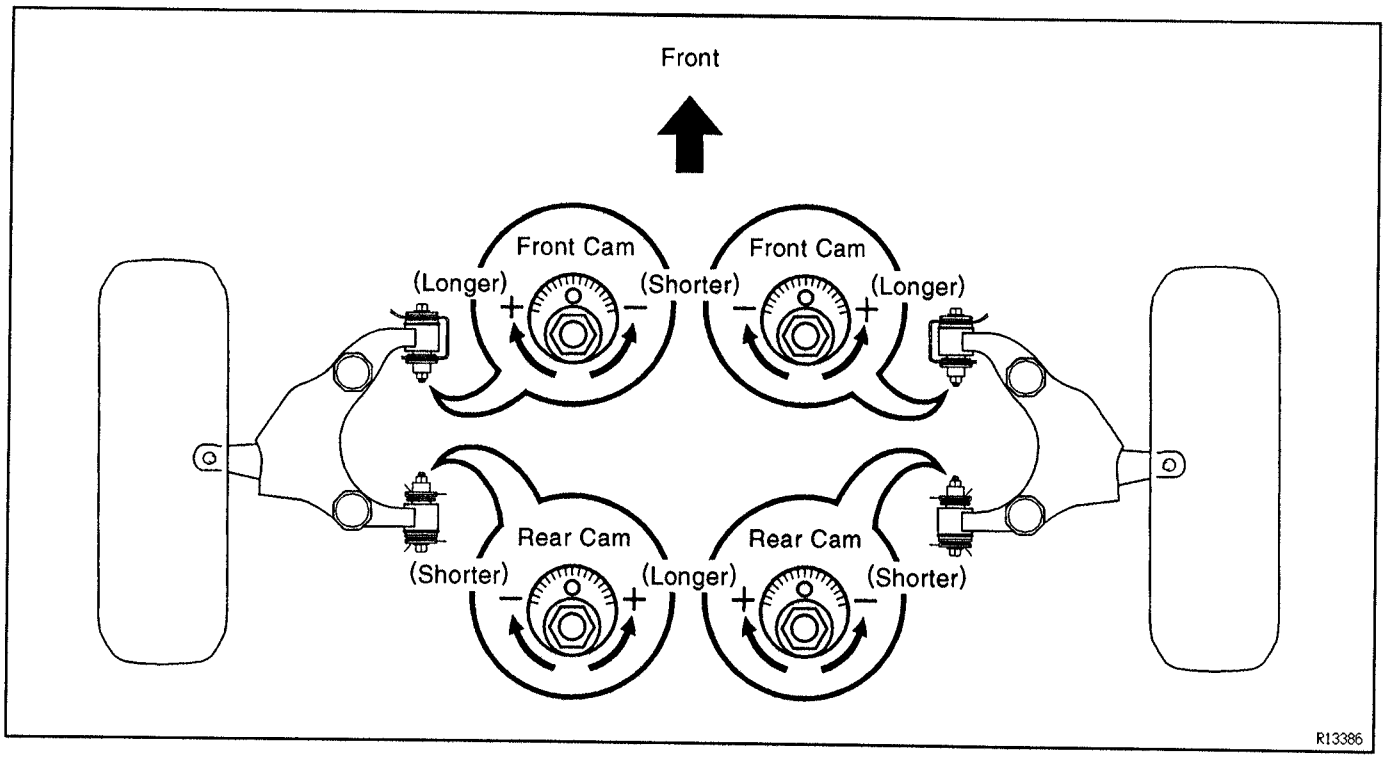
Front
Front Cam
(Longer)
(Shorter)
Front Cam
(Shorter)
(Longer)
Rear Cam
(Shorter)
(Longer)
Rear Cam
(Longer)
(Shorter)
R13386

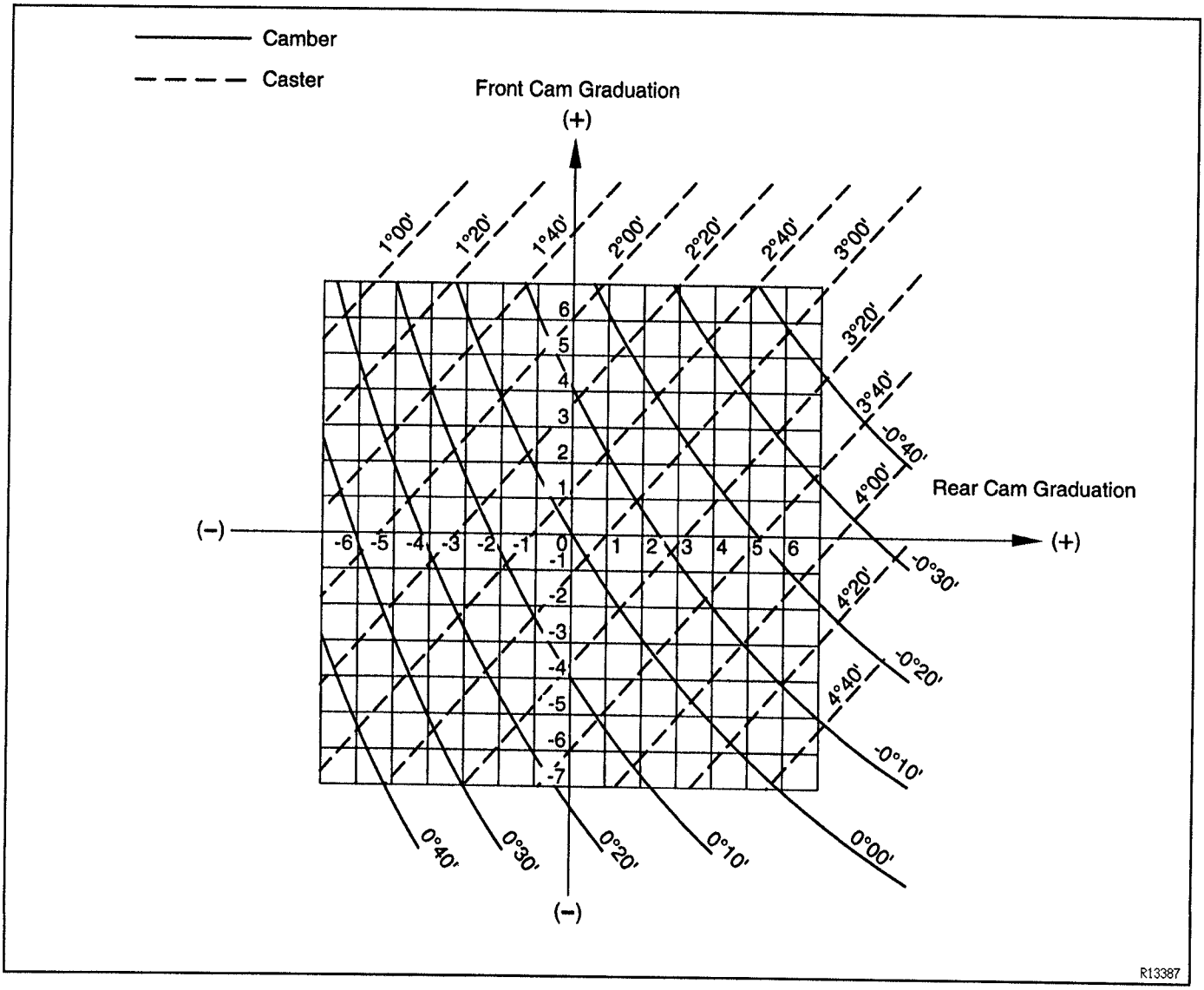
Camber
Caster
Front Cam Graduation
(+)
(–)
Rear Cam Graduation
(+)
(–)
1°00'
1°20'
1°40'
2°00'
2°20'
2°40'
3°00'
3°20'
3°40'
4°00'
4°20'
4°40'
-0°40'
-0°30'
-0°20'
-0°10'
0°00'
0°10'
0°20'
0°30'
0°40'
R13387

SA

FRONT AXLE (2WD)

PREPARATION

SAGJ7-06

SST (SPECIAL SERVICE TOOLS)

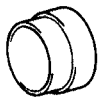	09527-17011 Rear Axle Shaft Bearing Remover	Bearing outer race removal and installation
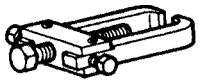	09628-62011 Ball Joint Puller	Steering knuckle disconnection
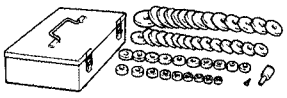	09950-60010 Replacer Set	Bearing outer race installation
	(09951-00490) Replacer 49	Outside bearing race installation
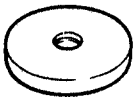	(09951-00640) Replacer 64	Inside bearing race installation
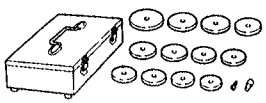	09950-60020 Replacer Set No.2	Oil seal installation
	(09951-00710) Replacer 71	
	09950-70010 Handle Set	Bearing races installation
	(09951-07150) Handle 150	

SAGJ8-07

EQUIPMENT

Dial indicator	
Torque wrench	
Spring tension gauge	

FRONT AXLE HUB AND STEERING KNUCKLE

COMPONENTS

SAOJA–06

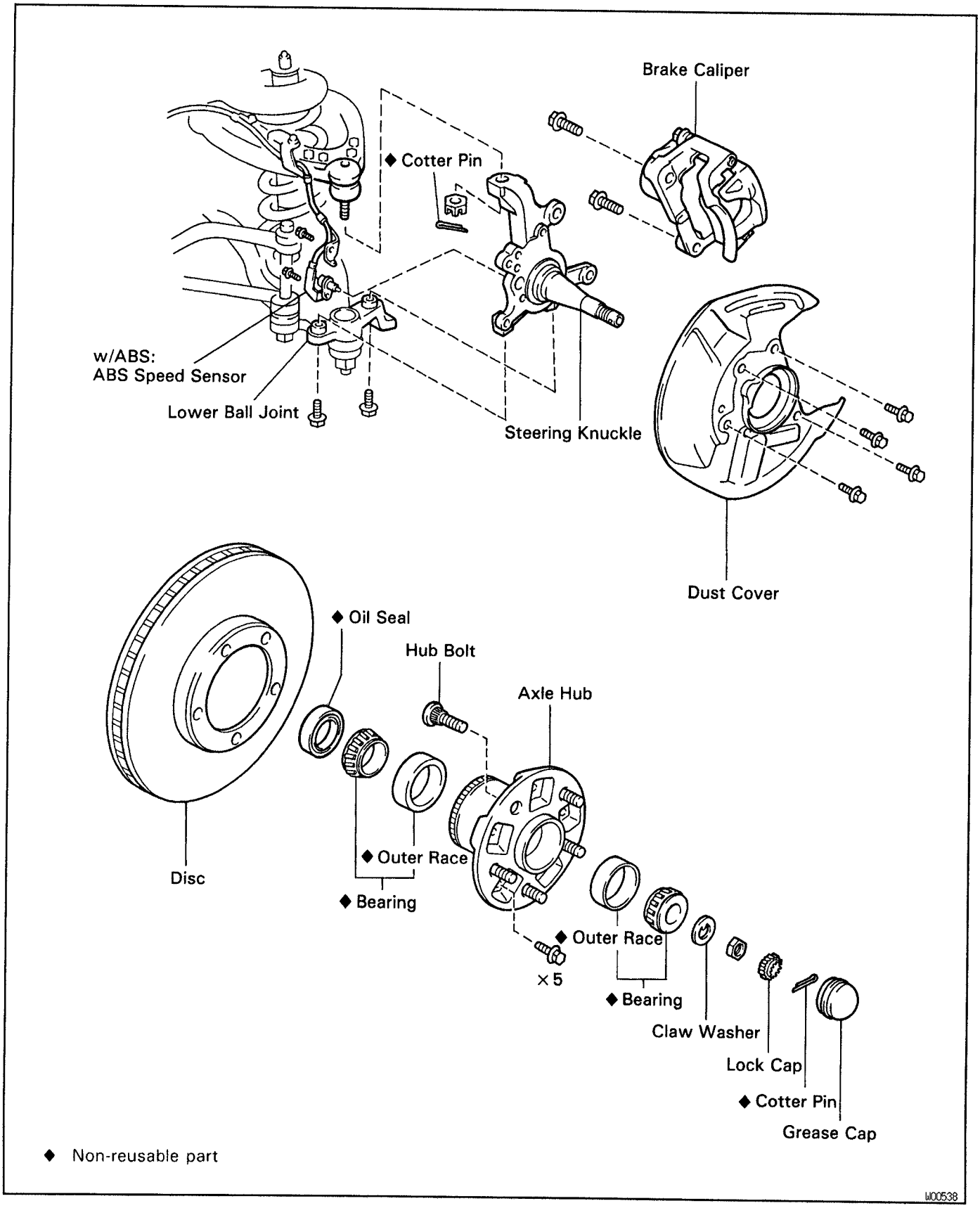

◆ Non-reusable part

W00538

SA

SA1RA-03

FRONT AXLE HUB AND STEERING KNUCKLE REMOVAL

1. REMOVE FRONT WHEEL

2. w/ ABS:
REMOVE ABS SPEED SENSOR AND WIRE HARNESS CLAMP FROM STEERING KNUCKLE

3. REMOVE BRAKE CALIPER

(a) Remove the 2 bolts and brake caliper.

(b) Support the brake caliper securely.

4. CHECK AXLE HUB BEARING BACKLASH

(a) Using a screwdriver, remove the grease cap.

(b) Place the dial indicator near the center of the axle hub and check the backlash in the bearing shaft direction.
Maximum:
0.05 mm (0.0020 in.)
If it is greater than the maximum, replace the axle hub bearing.

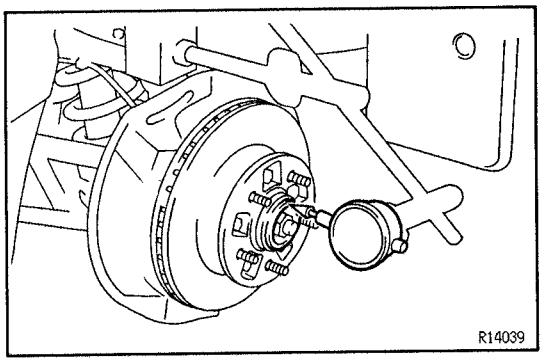

5. REMOVE AXLE HUB WITH DISC

(a) Remove the cotter pin and lock cap.

(b) Using a 30 mm socket, remove the nut.

(c) Remove the axle hub with the disc from the steering knuckle.
NOTICE: Be careful not to drop the outer bearing.

6. REMOVE OIL SEAL AND INNER BEARING

(a) Using a screwdriver, pry out the oil seal.
NOTICE: Be careful not to damage the ABS speed sensor rotor.

(b) Remove the inner bearing from the hub.

7. REMOVE DUST COVER
Remove the 4 bolts and dust cover.

8. REMOVE STABILIZER BAR LINK
(See page SA–73)

9. REMOVE STEERING KNUCKLE

(a) Support the lower suspension arm with a jack.

(b) Loosen the 2 lower ball joint set bolts.

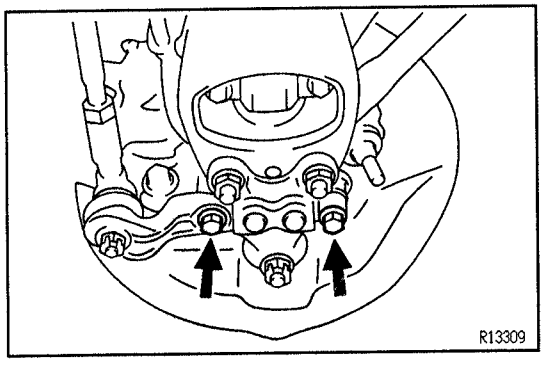

(c) Remove the cotter pin and loosen the nut.

(d) Using SST, disconnect the steering knuckle from the upper ball joint.
SST 09628–62011

(e) Remove the 2 lower ball joint set bolts.

(f) Remove the nut and steering knuckle.
NOTICE: Do not remove the jack.

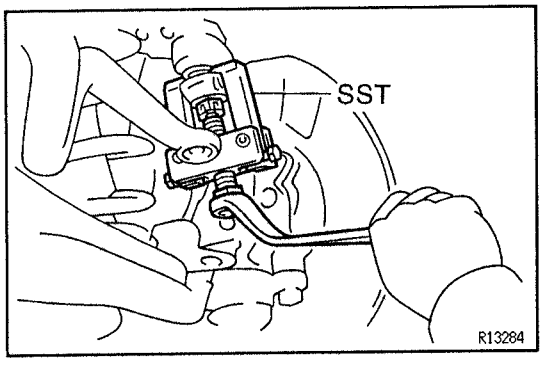

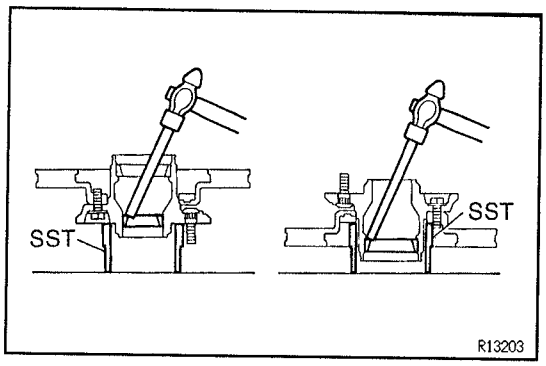

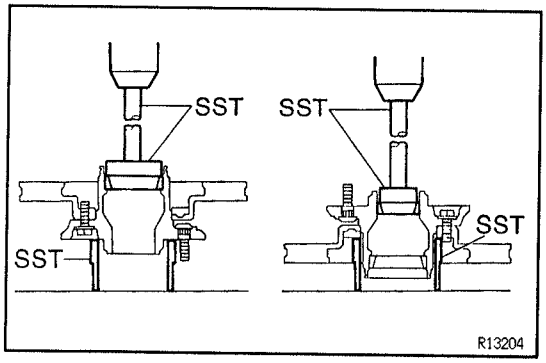

FRONT AXLE HUB BEARING INSPECTION AND REPAIR

SA0JC-07

1. CHECK HUB BEARINGS

Clean the bearings and outer races and inspect them for wear or damage.

2. REMOVE BEARING OUTER RACES

Using SST, a brass bar and a hammer, remove the bearing outer races.

SST 09527–17011

NOTICE: Be careful not to damage the ABS speed sensor rotor.

3. INSTALL NEW BEARING OUTER RACES

(a) Using SST and a press, install a new inside bearing race.

SST 09527–17011, 09950–60010 (09951–00640), 09950–70010 (09951–07150)

(b) Using SST and a press, install a new outside bearing race.

SST 09527–17011, 09950–60010 (09951–00490), 09950–70010 (09951–07150)

NOTICE: Be careful not to damage the ABS speed sensor rotor.

SA

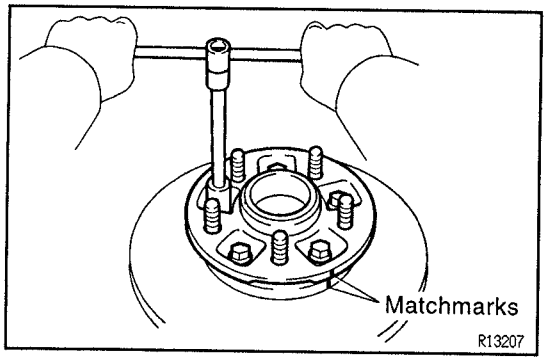

HUB BOLT REPLACEMENT

SA1R8-03

1. REMOVE HUB BOLT

(a) Place matchmarks on the disc and axle hub.

(b) Remove the 5 bolts and separate the disc and axle hub.

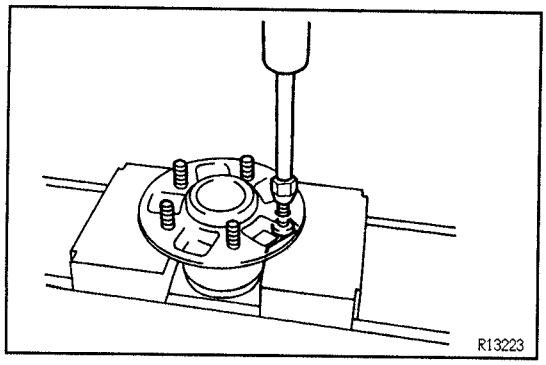

(c) Install the nut to the hub bolt.

(d) Using a brass bar and a press, remove the hub bolt.

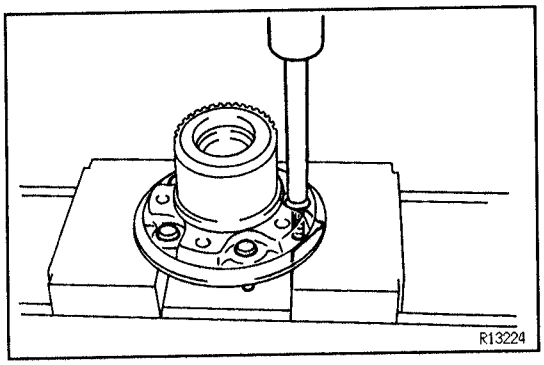

2. INSTALL HUB BOLT

(a) Using a brass bar and a press, install the hub bolt.

(b) Align the matchmarks and install the axle hub to the disc with the 5 bolts.

Torque: 64 N·m (650 kgf·cm, 47 ft·lbf)

SA27G–01

FRONT AXLE HUB AND STEERING KNUCKLE INSTALLATION

1. INSTALL STEERING KNUCKLE

(a) Support the lower suspension arm with a jack.

(b) Place the steering knuckle to the lower ball joint and temporarily install the 2 bolts.

(c) Push down the upper suspension arm and connect the upper ball joint to the steering knuckle and install the nut.

Torque: 110 N·m (1,100 kgf·cm, 80 ft·lbf)

(d) Install a new cotter pin.

(e) Torque the 2 lower ball joint bolts.

Torque: 160 N·m (1,600 kgf·cm, 116 ft·lbf)

2. INSTALL DUST COVER

Install the dust cover with the 4 bolts.

Torque: 8.3 N·m (85 kgf·cm, 74 in.·lbf)

3. INSTALL STABILIZER BAR LINK

(See page SA–73)

SA

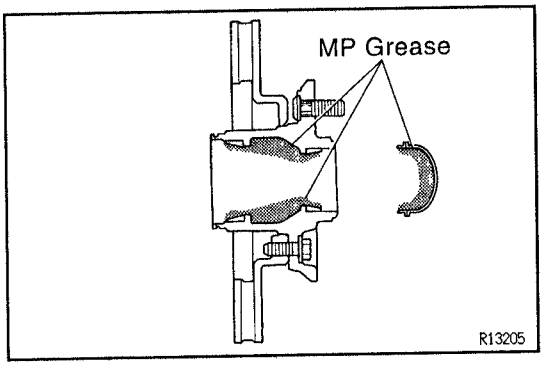

4. PACK BEARINGS WITH MP GREASE

(a) Place MP grease in the palm of your hand.

(b) Pack grease into the bearing, continuing until the grease oozes out from the other side.

(c) Do the same around the bearing circumference.

5. COAT INSIDE OF HUB AND CAP WITH MP GREASE

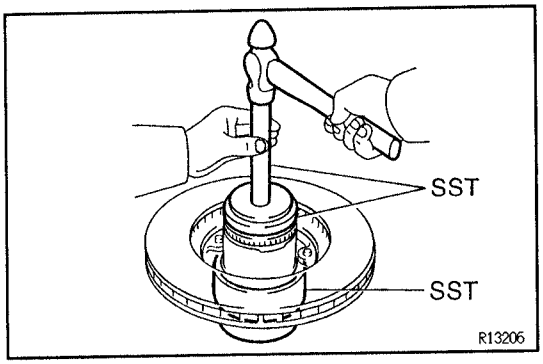

6. INSTALL INNER BEARING AND OIL SEAL

(a) Place inner bearing into the hub.

(b) Using SST and a hammer, install a new oil seal into the hub.

SST 09527–17011, 09950–60020 (09951–00710), 09950–70010 (09951–07150)

NOTICE: Be careful not to damage the ABS speed sensor rotor.

(c) Coat the oil seal lip with MP grease.

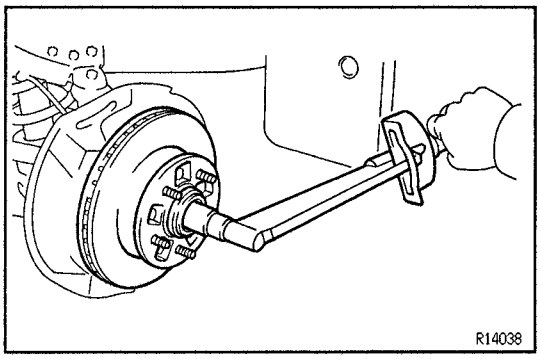

7. INSTALL AXLE HUB WITH DISC

(a) Place the axle hub on the spindle.

(b) Install the outer bearing and claw washer.

8. ADJUST PRELOAD

(a) Install and torque the nut.
Torque: 34 N·m (350 kgf·cm, 25 ft·lbf)

(b) Make the bearing smooth by turning the hub several times.

(c) Loosen the nut until it can be turned by hand.

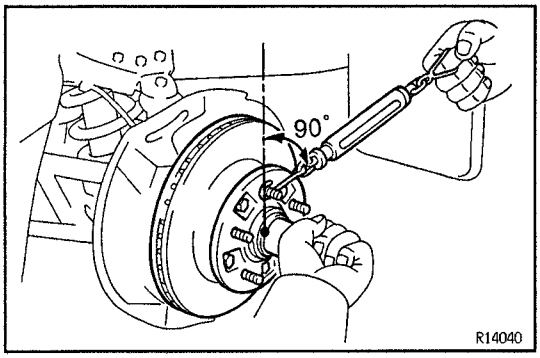

(d) Using a spring tension gauge, measure and make a note of the frictional force of the oil seal.
HINT: Make sure to check preload in the direction of rotation.

(e) Tighten the nut until the preload is within the specification.
Preload (at starting) :
Frictional force plus
6–18 N (0.6–1.8 kgf, 1.3–4.0 lbf)
HINT: Make sure to check preload in the direction of rotation.

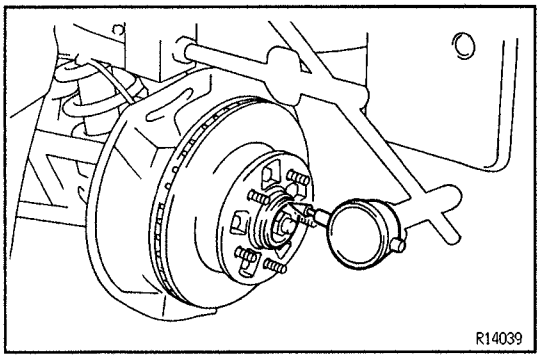

(f) Measure the hub axial play.
Axial play:
0.05 mm (0.0020 in.) or less

SA

9. INSTALL LOCK CAP, COTTER PIN AND GREASE CAP

(a) Install the lock cap and a new cotter pin.

(b) Install the grease cap.

10. INSTALL BRAKE CALIPER
Install the 2 brake caliper set bolts.
Torque: 108 N·m (1,100 kgf·cm, 80 ft·lbf)

11. w/ ABS:
CONNECT ABS SPEED SENSOR AND WIRE HARNESS CLAMP TO STEERING KNUCKLE
Torque: 8 N·m (82 kgf·cm, 71 in.·lbf)

12. INSTALL FRONT WHEEL
Torque: 110 N·m (1,150 kgf·cm, 83 ft·lbf)

13. CHECK FRONT WHEEL ALIGNMENT
(See page SA–3)

14. w/ ABS:
CHECK ABS SPEED SENSOR SIGNAL
(See page BR–51)

FRONT AXLE (4WD)

PREPARATION

SST (SPECIAL SERVICE TOOLS)

SA0N6-04

	09223–15030	Oil Seal & Bearing Replacer	Oil seal (outside) installation
	09318–12010	Transfer Bearing Adjusting Nut Wrench	w/ Free wheel hub: Hub lock nut
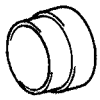	09527–17011	Rear Axle Shaft Bearing Remover	Hub bearing installation Oil seals installation
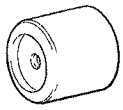	09649–17010	Steering Knuckle Tool	Axle hub installation
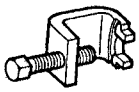	09650–17011	Hub Bolt Remover	Hub bolt replacement
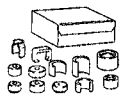	09710–30021	Suspension Bushing Tool Set	Axle hub removal
	(09710–03051)	Bushing Replacer	
	09950–40010	Puller B Set	Upper ball joint disconnection Axle hub removal
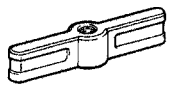	(09951–04010)	Hanger 150	Upper ball joint disconnection
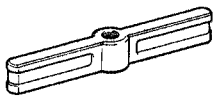	(09951–04020)	Hanger 200	Axle hub removal
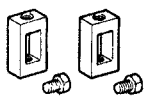	(09952–04010)	Slide Arm	
	(09953–04020)	Center Bolt 150	

SA

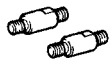	(09954–04010) Arm 25	
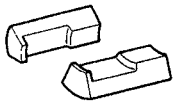	(09955–04030) Claw No.3	
	(09957–04010) Attachment	Axle hub removal
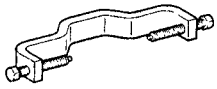	(09958–04010) Holder	
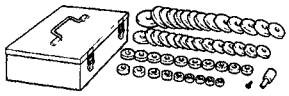	09950–60010 Replacer Set	w/o Free wheel hub: Bearing spacer installation
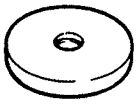	(09951–00650) Replacer 65	
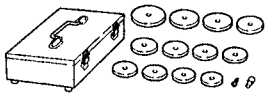	09950–60020 Replacer Set No.2	
	(09951–00810) Replacer 81	Hub bearing removal
	(09951–00910) Replacer 91	Hub bearing installation
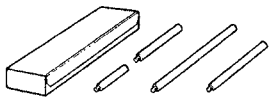	09950–70010 Handle Set	Hub bearing removal and installation w/o Free wheel hub: Bearing spacer installation
	(09951–07150) Handle 150	

SA

SA0N7-03

RECOMMENDED TOOLS

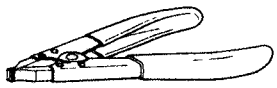	09905-00012 Snap Ring No.1 Expander .	
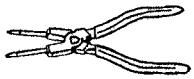	09905-00013 Snap Ring Pliers .	

SA0N8-04

EQUIPMENT

Torque wrench	

SA

FRONT AXLE HUB
COMPONENTS

SAON9–04

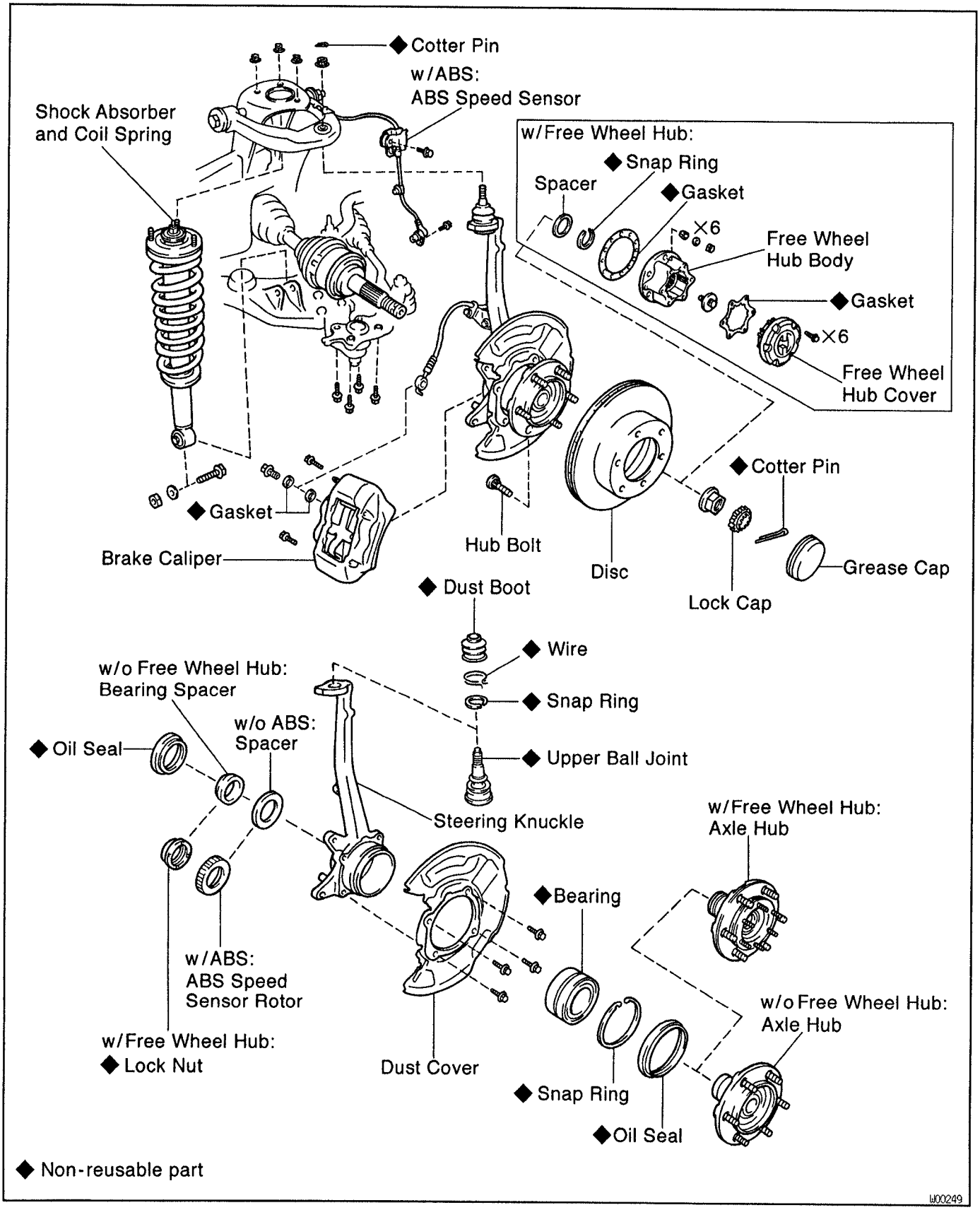

SA

SA27H-01

STEERING KNUCKLE WITH AXLE HUB REMOVAL

1. **REMOVE FRONT WHEEL**
   Torque: 110 N·m (1,150 kgf·cm, 83 ft·lbf)
2. **REMOVE SHOCK ABSORBER**
   (See page SA–77)
3. **DISCONNECT DRIVE SHAFT**
   w/o Free wheel hub:

(a) Using a screwdriver, remove the grease cap.
(b) Remove the cotter pin and lock cap.
(c) While appily the brakes, remove the lock nut.
Torque: 235 N·m (2,400 kgf·cm, 174 ft·lbf)

w/ Free wheel hub:

(a) Remove the free wheel hub.
(See page SA–26)
(b) Using a snap ring expander, remove the snap ring.
(c) Remove the spacer.

4. **w/ABS:**
   REMOVE ABS SPEED SENSOR AND WIRE HARNESS CLAMP FROM STEERING KNUCKLE
   Torque: 8 N·m (82 kgf·cm, 71 in.·lbf)
5. **REMOVE FRONT BRAKE CALIPER AND DISC**
   (See page BR–17)

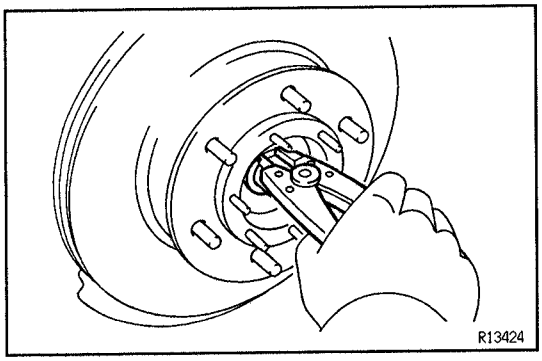

SA

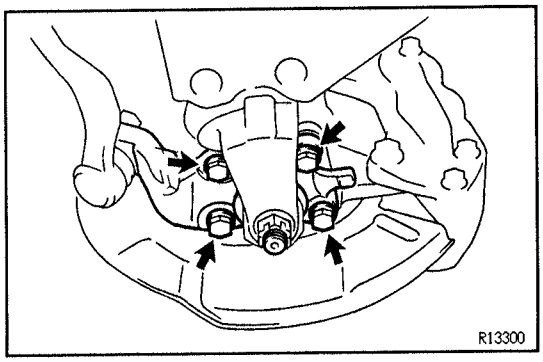

6. **DISCONNECT LOWER BALL JOINT**
   Remove the 4 bolts and disconnect the lower ball joint.
   Torque: 80 N·m (820 kgf·cm, 59 ft·lbf)

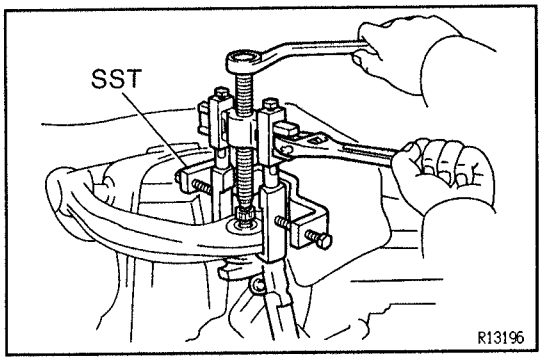

7. **REMOVE STEERING KNUCKLE**

(a) Remove the cotter pin and loosen the nut.
Torque: 105 N·m (1,100 kgf·cm, 80 ft·lbf)
(b) Using SST, disconnect the steering knuckle.
SST 09950–40010 (09951–04010, 09952–04010, 09553–04020, 09554–04010, 09955–04030, 09958–04010)
(c) Remove the nut and steering knuckle.
NOTICE: Be careful not to damage the oil seal and drive shaft boot.
REMOVAL HINT: When it is difficult to disconnect the drive shaft, tap the drive shaft with a plastic hammer.

FRONT AXLE HUB DISASSEMBLY

SA1WN–02

1. REMOVE OIL SEAL (INSIDE)

(a) Clamp the axle hub in a soft jaw vise.
HINT: Close vise until it holds hub bolts. Do not tighten further.

(b) Using a screwdriver, remove the oil seal (inside).

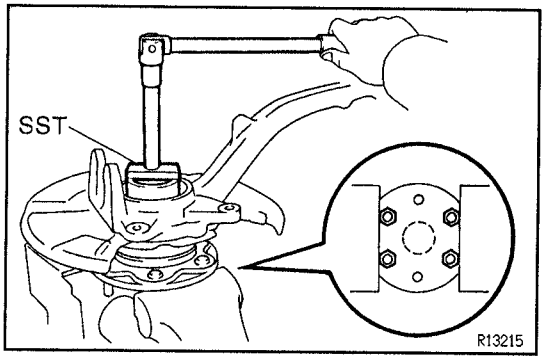

2. w/ Free wheel hub:
REMOVE LOCK NUT AND ABS SPEED SENSOR ROTOR/SPACER

(a) Using a hammer and a chisel, loosen the staked part of the lock nut.
NOTICE: Be careful not to damage the bushing.

(b) Using SST, remove the lock nut.
SST 09318–12010

(c) Remove the ABS speed sensor rotor/spacer.
NOTICE: Take care not to scratch the serration of the speed sensor rotor.

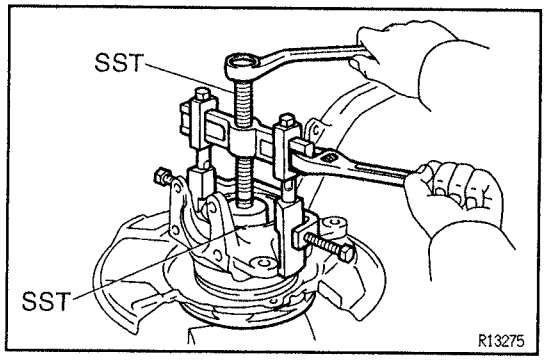

3. REMOVE AXLE HUB FROM STEERING KNUCKLE

(a) Remove the 4 bolts and shift the brake dust cover towards the hub side (outside).

(b) Using SST, remove the axle hub from the steering knuckle.
SST 09710–30020 (09710–03050),
09950–40010 (09951–04020, 09952–04010,
09953–04020, 09954–04010, 09955–04030,
09957–04010, 09958–04010)

(c) w/o Free wheel hub:
Remove the bearing spacer and ABS speed sensor rotor/spacer.

4. REMOVE OIL SEAL (OUTSIDE)

Using a screwdriver, remove the oil seal (outside) from the steering knuckle.

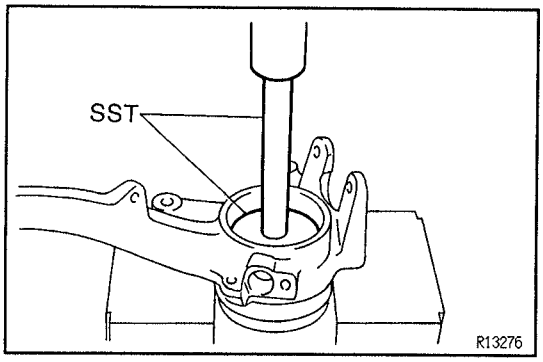

5. REMOVE BEARING FROM STEERING KNUCKLE

(a) Using snap ring pliers, remove the snap ring.

(b) Using SST and a press, remove the bearing from the steering knuckle.
SST 09950–60020 (09951–00810),
09950–70010 (09951–07150)

SA

SA1WP-02

FRONT AXLE HUB ASSEMBLY

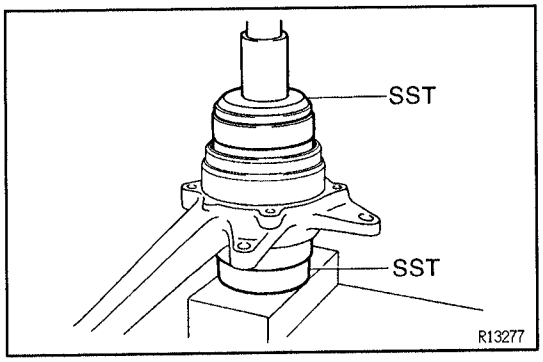

1. INSTALL NEW BEARING

(a) Using SST and a press, install a new bearing to the steering knuckle.
SST 09527–17011, 09950–60020 (09951–00910)

(b) Using snap ring pliers, install the snap ring.

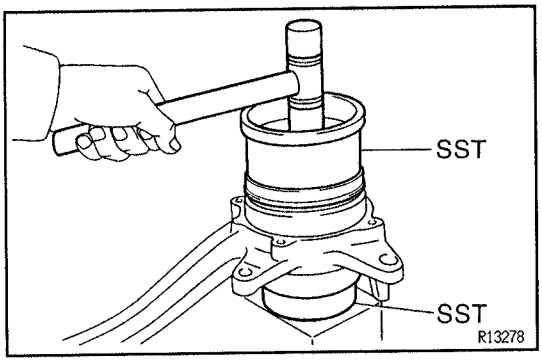

2. INSTALL NEW OIL SEAL (OUTSIDE)

(a) Using SST and a plastic hammer, install a new oil seal (outside).
SST 09223–15030, 09527–17011

(b) Coat MP grease to the oil seal lip.

3. INSTALL AXLE HUB TO STEERING KNUCKLE

(a) Install the brake dust cover to the steering knuckle with the 4 bolts.
Torque: 18 N·m (185 kgf·cm, 13 ft·lbf)

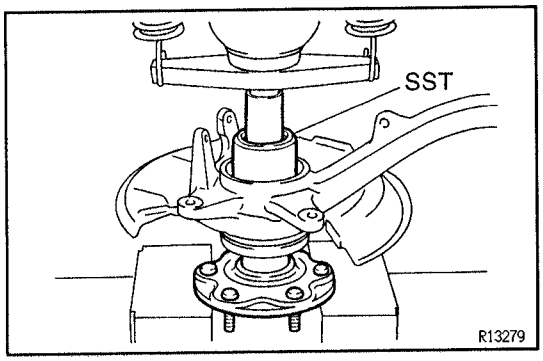

(b) Using SST and a press, install the axle hub to the steering knuckle.
SST 09649–17010

4. INSTALL ABS SPEED SENSOR ROTOR/SPACER

NOTICE: Do not scratch the serration of the speed sensor rotor.

SA

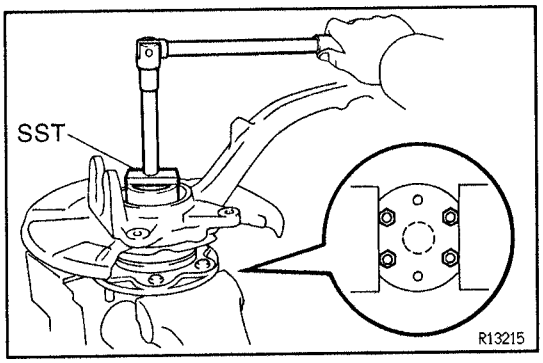

5. w/ Free wheel hub:
INSTALL NEW LOCK NUT

(a) Using SST, install and torque a new nut to the axle hub.
SST 09318–12010
Torque: 274 N·m (2,800 kgf·cm, 203 ft·lbf)

(b) Using a chisel and hammer, stake the nut.

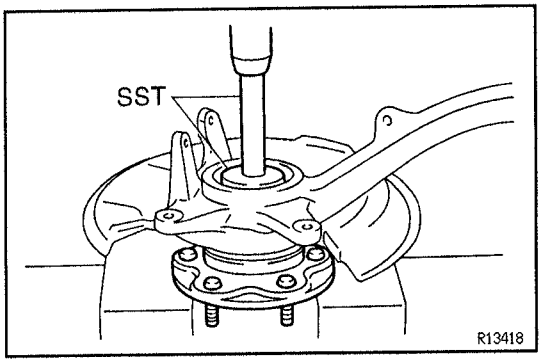

6. w/o Free wheel hub:
INSTALL BEARING SPACER

Using SST and a press, install the bearing spacer.
SST 09950–60010 (09951–00650),
09950–70010 (09951–07150)

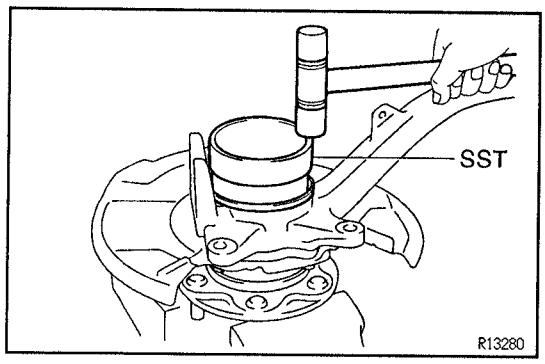

7. INSTALL NEW OIL SEAL (INSIDE)

(a) Using SST and a plastic hammer, install a new oil seal (inside).
SST 09527–17011
HINT: Strike the SST on its cirwmference evenly.

(b) Coat MP grease to the oil seal lip.

STEERING KNUCKLE WITH AXLE HUB INSTALLATION

SA27J–01

Installation is in the reverse order of removal.
HINT: After installation, bleed brake system, check ABS speed sensor signal and front wheel alignment.
(See page BR–5, 51 and SA–8)

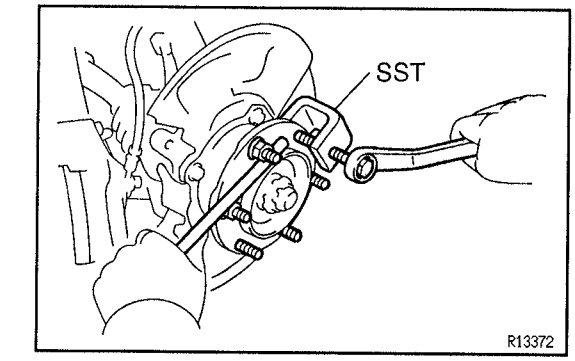

HUB BOLT REPLACEMENT

SA19M–03

1. REMOVE FRONT WHEEL

2. REMOVE BRAKE CALIPER AND DISC
(See page BR–17)

3. REMOVE HUB BOLT
Using SST, remove hub bolt.
SST 09650–17011

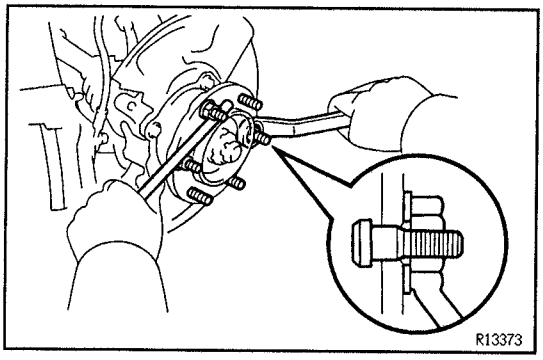

4. INSTALL HUB BOLT
Install a washer and nut to the hub bolt as shown in the illustration, and install the hub bolt with torquing the nut.

5. INSTALL BRAKE DISC AND CALIPER
(See page BR–17)

6. INSTALL FRONT WHEEL
Torque: 110 N·m (1,150 kgf·cm, 83 ft·lbf)

SA

FREE WHEEL HUB

COMPONENTS

(See page SA–21)

SA27K–01

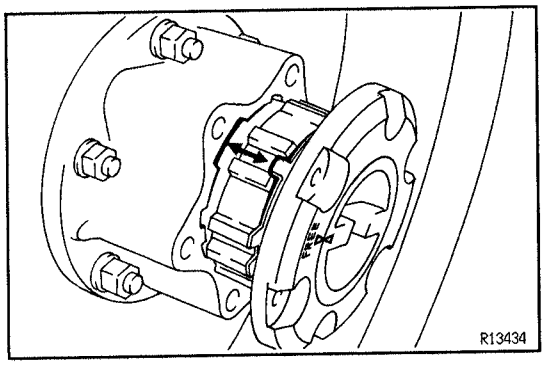

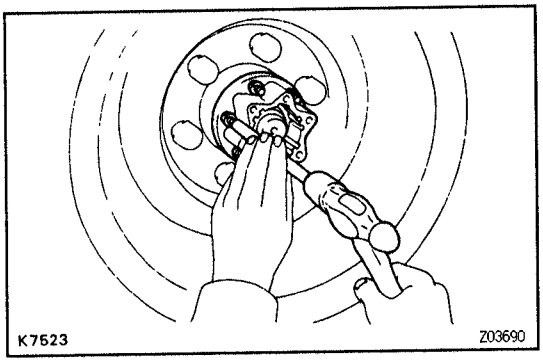

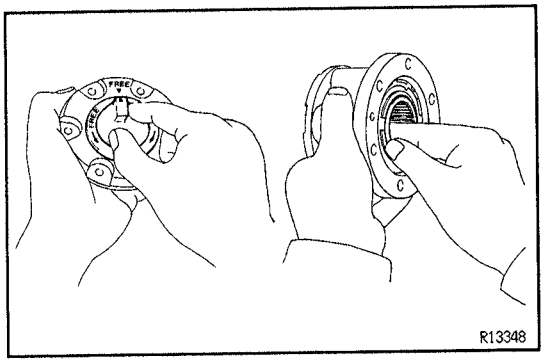

SA1WQ–02

FREE WHEEL HUB REMOVAL

1. **REMOVE FREE WHEEL HUB COVER**

(a) Set the control handle to FREE.

(b) Remove the 6 cover mounting bolts and pull off the cover.

Torque: 10 N·m (100 kgf·cm, 7 ft·lbf)

INSTALLATION HINT: Before install the hub cover, apply MP grease to the clutch splines.

(c) Remove the gasket.

2. **REMOVE BOLT WITH WASHER**

Torque: 18 N·m (185 kgf·cm, 13 ft·lbf)

3. **REMOVE FREE WHEEL HUB BODY**

(a) Remove the 6 mounting nuts and washers.

Torque: 31 N·m (315 kgf·cm, 23 ft·lbf)

(b) Using a brass bar and a hammer, tap on the bolts head and remove the cone washers.

(c) Pull off the free wheel hub body.

(d) Remove the gasket.

SA0JZ–05

FREE WHEEL HUB INSPECTION

1. **INSPECT COVER, HANDLE AND SEAL**

Check the handle moves smoothly.

2. **INSPECT INNER HUB**

Place the cover in the body and check that the inner hub turns smoothly.

SA27L–01

FREE WHEEL HUB INSTALLATION

Installation is in the reverse order of removal.

FRONT DRIVE SHAFT

PREPARATION

SST (SPECIAL SERVICE TOOLS)

SA1WR-02

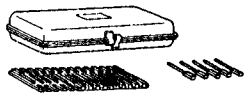	09240–00020 Wire Gauge Set	Boot clamp clearance adjustment
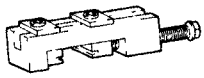	09521–24010 Drive Shaft Boot Clamping Tool	Boot clamp installation
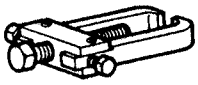	09628–62011 Ball Joint Puller	Lower ball joint removal
	09631–10030 Oil Seal Remover	Drive shaft installation

RECOMMENDED TOOLS

SA02F-0C

	09905–00012 Snap Ring No.1 Expander .	

EQUIPMENT

SA02G-0M

Torque wrench	

LUBRICANT

SA02H-0U

Item	Capacity	Classification
Outboard joint grease	215–235 g (7.58–8.29 oz.)	
Inboard joint grease	230–250 g (8.11–8.82 oz.)	

SA

FRONT DRIVE SHAFT

COMPONENTS

SA0K3—06

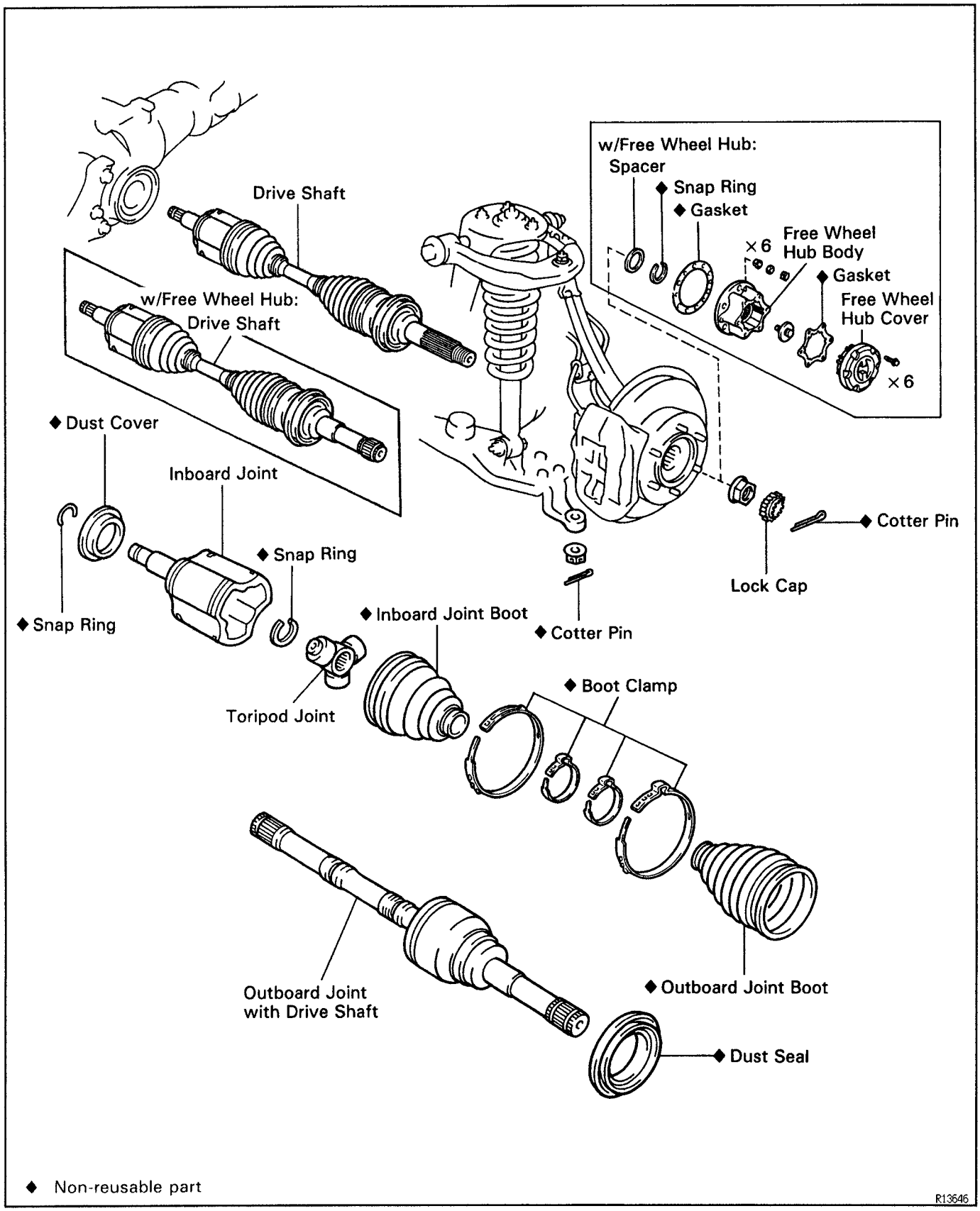

◆ Non-reusable part

R13646

SA

SA1WW-02

FRONT DRIVE SHAFT REMOVAL

1. REMOVE FRONT WHEEL
Torque: 110 N·m (1,150 kgf·cm, 83 ft·lbf)

2. DRAIN DIFFERENTIAL OIL

3. w/o FREE WHEEL HUB:
REMOVE DRIVE SHAFT LOCK NUT

(a) Using a screwdriver, remove the grease cap.
(b) Remove the cotter pin and lock cap.
(c) While apply the brakes, remove the lock nut.
Torque: 235 N·m (2,400 kgf·cm, 174 ft·lbf)

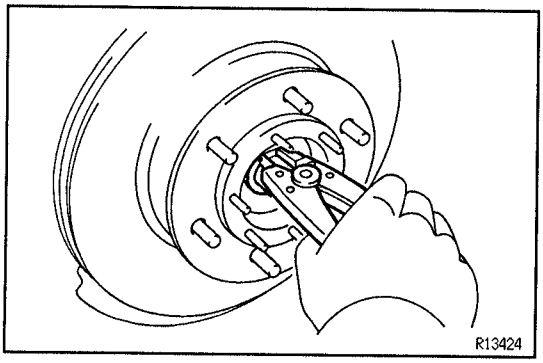

4. w/ FREE WHEEL HUB:
REMOVE FREE WHEEL HUB

(a) Remove the free wheel hub.
(See page SA–26)
(b) Using a snap ring expander, remove the snap ring.
(c) Remove the spacer.

5. DISCONNECT DRIVE SHAFT

Using a brass bar and hammer, disconnect the drive shaft.

REMOVAL HINT: When it is difficult to disconnect the drive shaft, tap in a screwdriver between differential tube/differential carrier and drive shaft.

INSTALLATION HINT:

- Before installation, set the snap ring opening side facing downward.
- Using SST and a hammer, strike the inboard joint into the differential. At that time, strice the snags evenly to avoid snags deformation.

SST 09631–10030

- After installation, check that the drive shaft cannot be pull out by hand.

NOTICE: Be careful not to damage the dust cover of the drive shaft.

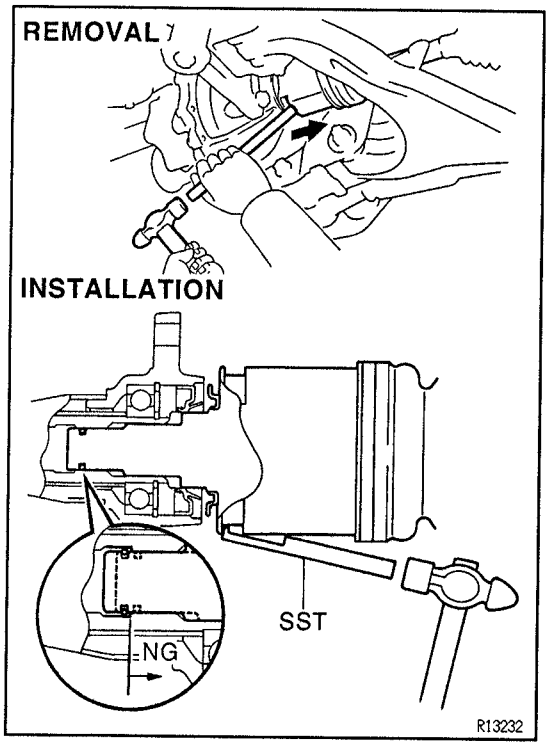

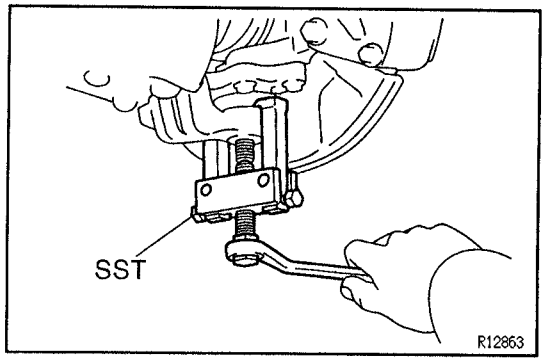

6. DISCONNECT LOWER SUSPENSION ARM

(a) Remove the cotter pin and nut.
Torque: 152 N·m (1,550 kgf·cm, 112 ft·lbf)
(b) Using SST, disconnect the lower suspension arm.
SST 09628–62011
INSTALLATION HINT: Face the cotter pin hole of the lower ball joint forward.

SA

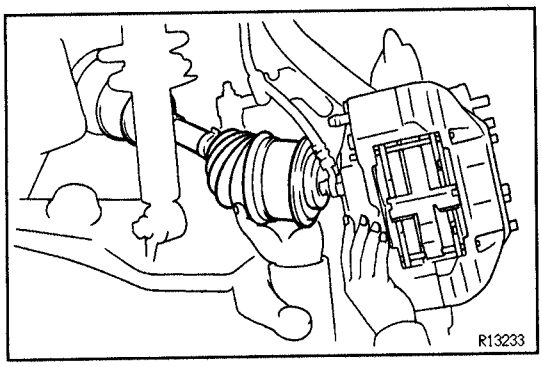

7. REMOVE DRIVE SHAFT

Push the steering knuckle outward and remove the drive shaft.

REMOVAL HINT: When it is difficult to disconnect the drive shaft, tap the drive shaft with a plastic hammer.

NOTICE: Be careful not to damage the oil seal, boots and dust seal.

8. REMOVE SNAP RING FROM INBOARD SHAFT

FRONT DRIVE SHAFT DISASSEMBLY

8A1WX-01

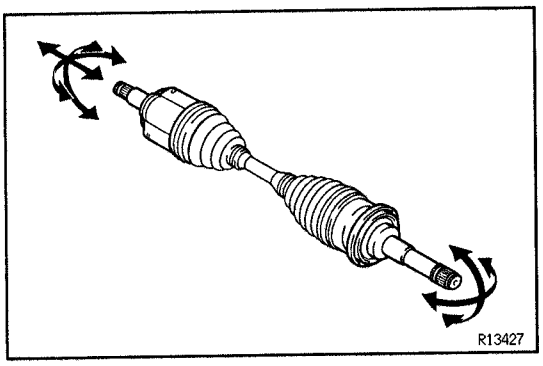

1. CHECK DRIVE SHAFT

(a) Check to see that there is no play in the inboard and outboard joints.

(b) Check to see that the inboard joint slides smoothly in the thrust direction.

(c) Check to see that there is no significant play in the radial direction of the inboard joint.

(d) Check the boot for damage.

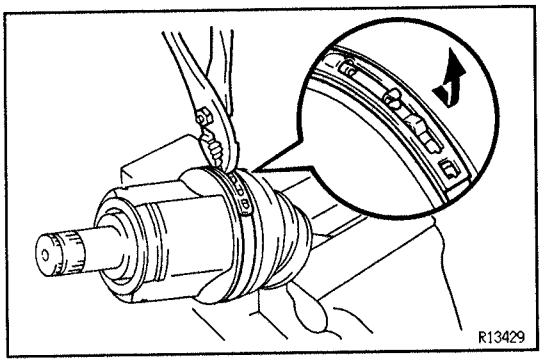

2. REMOVE INBOARD JOINT BOOT CLAMPS

(a) Using pliers, draw hooks together and remove the large clamp.

(b) Using a side cutter, cut the small boot clamp.

(c) Slide the inboard joint boot toward the outboard joint.

SA

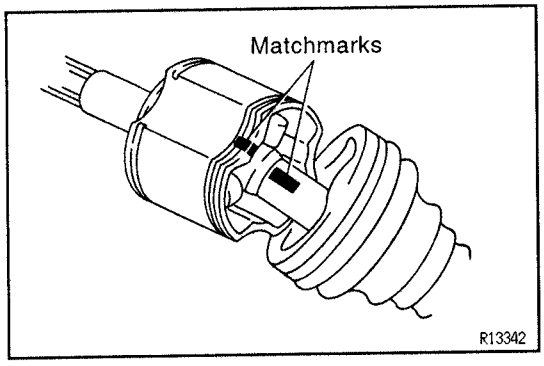

3. REMOVE INBOARD JOINT TULIP

(a) Place matchmarks on the inboard joint and drive shaft.

(b) Remove the inboard joint tulip from the drive shaft.

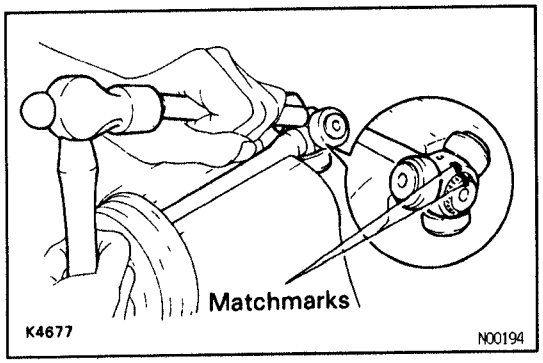

4. REMOVE TRIPOD JOINT FROM DRIVE SHAFT

(a) Using a snap ring expander, remove the snap ring.

(b) Place matchmarks on the shaft and tripod.

(c) Using a brass bar and hammer, remove the tripod joint.

NOTICE: Do not tap the roller.

5. REMOVE INBOARD AND OUTBOARD JOINT BOOTS

(a) Remove the inboard joint boot from the drive shaft.

(b) Using a side cutter, cut the outboard boot clamps.

(c) Remove the outboard joint boot from the drive shaft.

NOTICE: Do not disassemble the outboard joint.

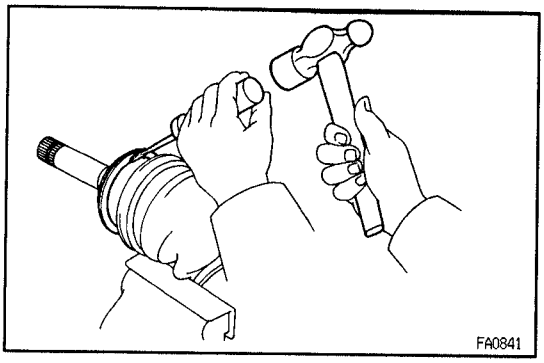

6. **REMOVE DUST COVER**
Using a screwdriver, remove the dust cover from the inboard joint tulip.

7. **REMOVE DUST SEAL**
Using a screwdriver and hammer, remove the dust seal from the drive shaft.

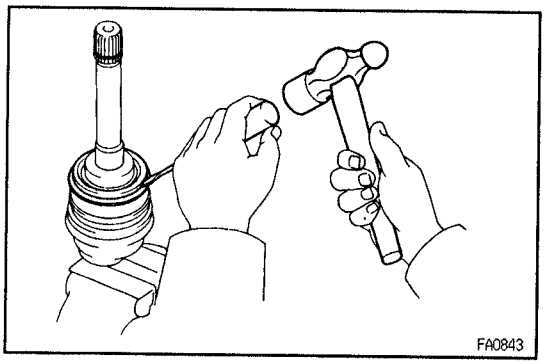

FRONT DRIVE SHAFT ASSEMBLY

SA27M–01

1. **INSTALL DUST COVER**
Using a screwdriver and hammer, install a new dust cover.

2. **INSTALL DUST SEAL**
Using a screwdriver and hammer, install a new dust seal.
SST 09613–26010

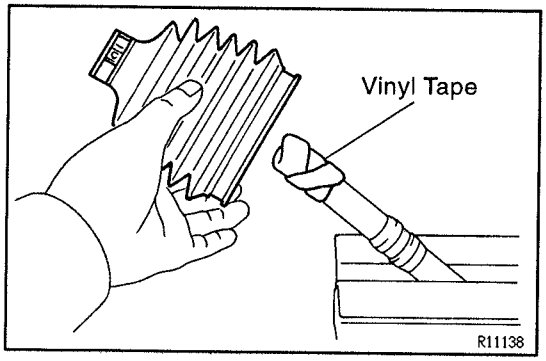

3. **TEMPORARILY INSTALL NEW BOOTS TO DRIVE SHAFT**
HINT:
- Before installing the boots, wrap vinyl tape around the spline of the shaft to prevent damaging the boot.
- Place new clamps to boot's small ends and install its to the drive shaft.

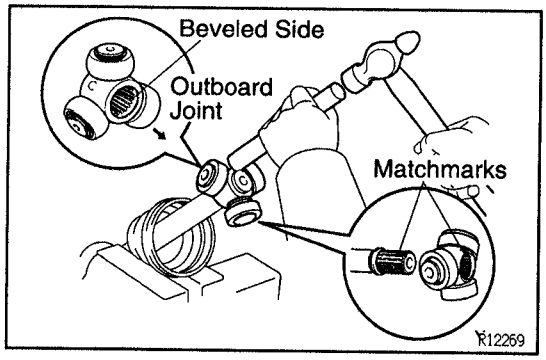

4. **ASSEMBLE TRIPOD JOINT**
(a) Place the beveled side of the tripod axial spline toward the outboard joint.
(b) Align the matchmarks placed before disassembly.
(c) Using a brass bar and a hammer, install the tripod joint onto the drive shaft.
NOTICE: Do not tap the roller.
(d) Using a snap ring expander, install a new snap ring.

5. **ASSEMBLE BOOT TO OUTBOARD JOINT**
Before assembling the boot, pack in grease.
HINT: Use the grease supplied in the boot kit.
Grease capacity:
215–235 g (7.58–8.29 oz.)

6. **ASSEMBLE BOOT AND INBOARD JOINT TULIP**
(a) Pack the inboard joint and boot with grease.
HINT: Use the grease supplied in the boot kit.
Grease capacity:
230–250 g (8.11–8.82 oz.)
(b) Align the matchmarks placed before assembly.
(c) Install the inboard joint tulip to the drive shaft.
(d) Temporarily install the boot to the inboard joint tulip.

SA

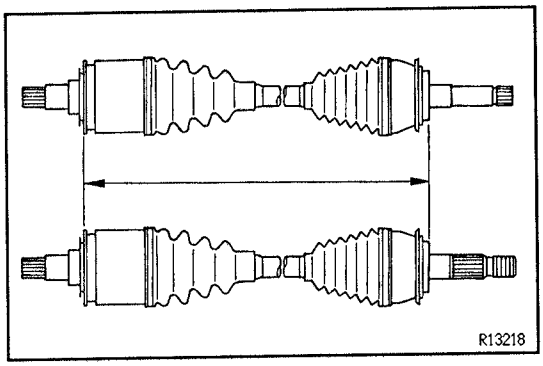

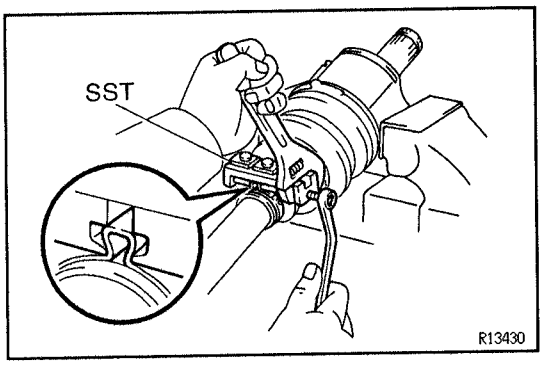

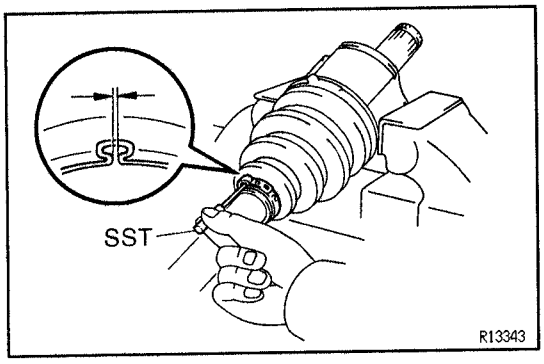

7. ASSEMBLE NEW BOOT CLAMPS TO BOTH BOOTS

(a) Ensure that the boots are in the shaft groove.

(b) Ensure that the boots are not stretched or contracted when the drive shaft is at standard length.

Drive shaft standard length:

436.2 ± 2.0 mm (17.173 ± 0.079 in.)

(c) Place a new inboard joint large boot clamp.

(d) Holding the clamp near the closing hooks, position the holes in the clamp's free end over the closing hooks with pliers.

(e) Secure clamps by drawing the closing hooks together.

(f) To assemble the other boot clamps, pinch the clamps and adjust clearance with SST.

NOTICE: Do not overtighten the SST.

SST 09521–24010

Clearance:

1.0–1.5 mm (0.039–0.059 in.)

(g) Measure the clearance of the boot clamps with SST.
SST 09240–00020

8. CHECK DRIVE SHAFT

(See page SA–30)

SA

FRONT DRIVE SHAFT INSTALLATION

8A27N–01

Installation is in the reverse order of removal.

HINT: After installation, fill differential with gear oil.
(See page SA–40)

FRONT DIFFERENTIAL

PREPARATION

SST (SPECIAL SERVICE TOOLS)

SA08N–0G

	09223–15020	Oil Seal & Bearing Replacer	Side gear shaft tube oil seal installation
	09226–10010	Crankshaft Front & Rear Bearing Replacer	Side bearing installation
	09308–00010	Oil Seal Puller	Side gear shaft tube oil seal Side oil seal
	09308–10010	Oil Seal Puller	Rear oil seal removal
	09309–37010	Transmission Bearing Replacer	Side gear shaft bearing installation
	09330–00021	Companion Flange Holding Tool	Companion flange removal Rear bearing installation
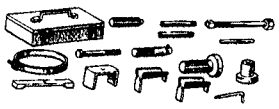	09350–20015	TOYOTA Automatic Transmission Tool Set	Intermediate shaft removal
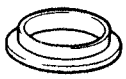	09502–12010	Differential Bearing Replacer	Rear bearing outer race removal
	09506–30012	Differential Drive Pinion Rear Bearing Cone Replacer	Rear bearing installation
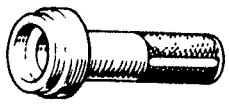	09554–22010	Differential Oil Seal Replacer	Rear oil seal installation
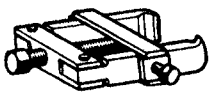	09556–22010	Drive Pinion Front Bearing Remover	Rear bearing removal
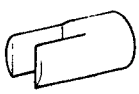	09564–32011	Differential Preload Adaptor	Ring gear backlash inspection

SA

	09570–22011	Differential Mounting Cushion Remover & Replacer	Drive pinion bearing race installation
	09608–32010	Steering Knuckle Oil Seal Replacer	Side oil seal installation
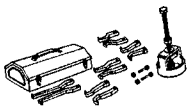	09612–65014	Steering Worm Bearing Puller	Rear bearing outer race removal
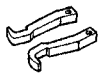	(09612–01020)	Claw "B"	
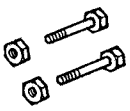	(09612–01050)	Hanger Pin with Nut	
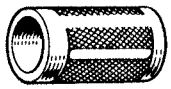	09636–20010	Upper Ball Joint Dust Cover Replacer	Dust deflector installation
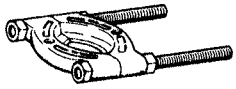	09950–00020	Bearing Remover	Front bearing removal Dust deflector installation
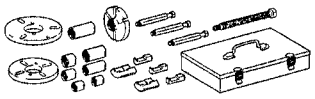	09950–30010	Puller A Set	Companion flange removal Front bearing installation
	(09951–03010)	Upper Plate	
	(09953–03010)	Center Bolt	
	(09954–03010)	Arm	
	(09955–03030)	Lower Plate 130	
	(09956–03020)	Adapter 18	
	09950–40010	Puller B Set	Side bearing removal Intermediate shaft removal

SA

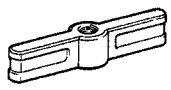	(09951–04010) Hanger 150	
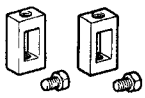	(09952–04010) Slide Arm	
	(09953–04020) Center Bolt 150	
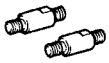	(09954–04010) Arm 25	
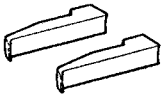	(09955–04010) Claw No.1	Intermediate shaft removal
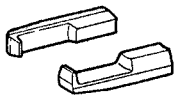	(09955–04060) Claw No.6	Side bearing removal
	(09957–04010) Attachment	
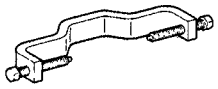	(09958–04010) Holder	
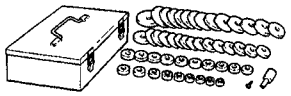	09950–60010 Replacer Set	
	(09951–00380) Replacer 38	Needle bearing installation
	(09951–00480) Replacer 48	Side bearing removal
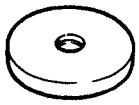	(09951–00540) Replacer 54	Side bearing outer race removal (retainer side)
	(09951–00600) Replacer 60	Oil deflector removal
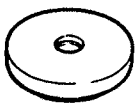	(09951–00650) Replacer 65	Side bearing outer race removal (carrier side)

SA

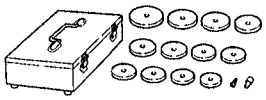	09950–60020 Replacer Set No.2	
	(09951–00710) Replacer 71	Oil deflector installation
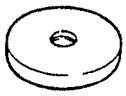	(09951–00790) Replacer 79	Side bearing outer race installation
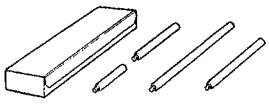	09950–70010 Handle Set	
	(09951–07150) Handle 150	

SA09P–07

RECOMMENDED TOOLS

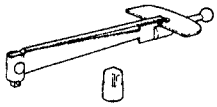	09025–00010 Torque Wrench (30 kgf·cm) .	
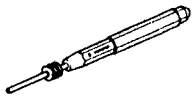	09031–00030 Pin Punch .	
	09044–00010 Torx Socket E14 .	
	09905–00012 Snap Ring No.1 Expander .	
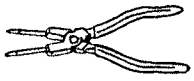	09905–00013 Snap Ring Pliers .	

SA09Q–0C

EQUIPMENT

Dial indicator or dial indicator with magnetic base	
Micrometer	
Torque wrench	

LUBRICANT

SA08R-0E

Item	Capacity	Classification
Differential oil (w/ A.D.D.)	1.15 liters (1.22 US qts, 1.01 Imp.qts)	Hypoid gear oil API GL–5 75W–90
Differential oil (w/o A.D.D.)	1.10 liters (1.16 US qts, 0.97 Imp.qts)	Hypoid gear oil API GL–5 [Above –18°C (0°F)] SAE 90 [Below –18°C (0°F)] SAE 80W or 80W–90

SSM (SPECIAL SERVICE MATERIALS)

SA08S-0K

08826–00090	Seal Packing 1281, THREE BOND 1281 or equivalent (FIPG)	Differential carrier x Side bearing retainer A.D.D.actuator x Clutch case Clutch case x Differential

ON–VEHICLE REPAIR

SA04S–08

COMPONENTS

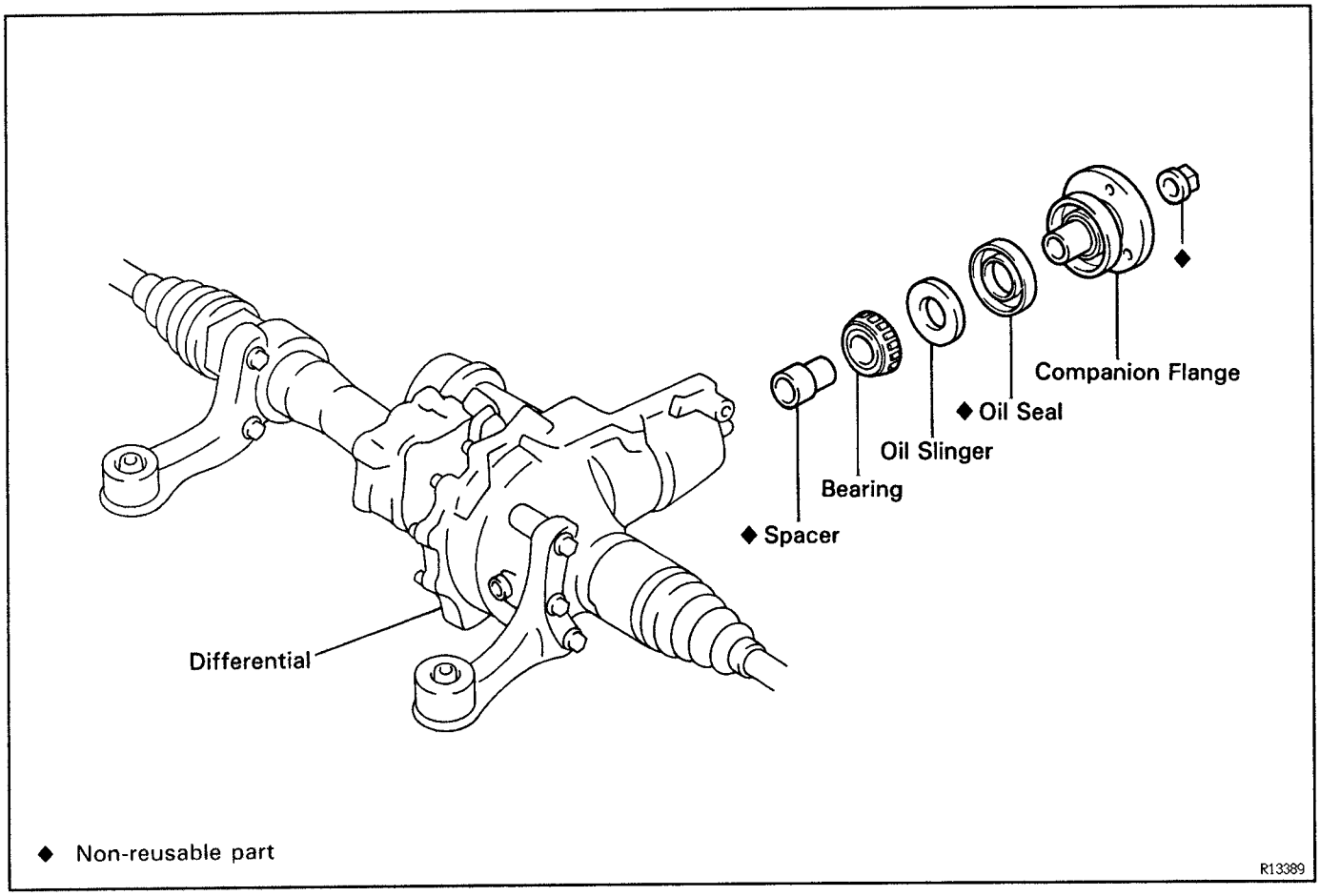

SA

SA1X9–02

REAR OIL SEAL REPLACEMENT

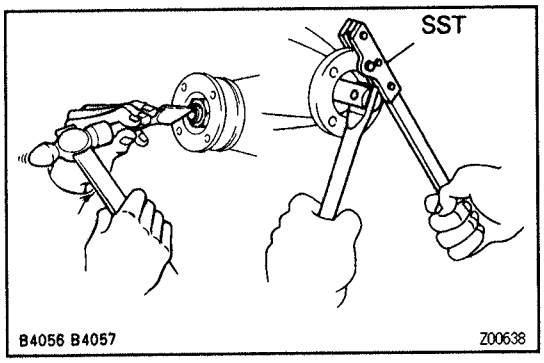

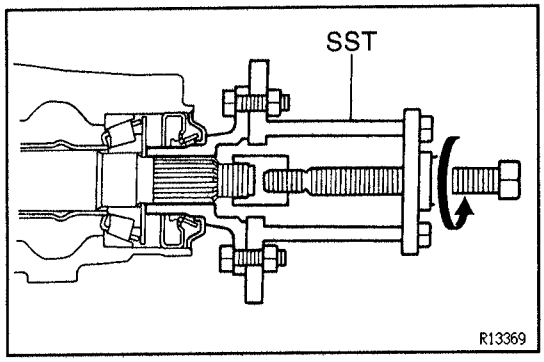

1. **REMOVE UNDER COVER AND DRAIN DIFFERENTIAL OIL**
2. **REMOVE FRONT PROPELLER SHAFT**
   (See page PR–6)
3. **REMOVE COMPANION FLANGE**

(a) Using a chisel and hammer, unstake the nut.

(b) Using SST to hold the flange, remove the nut.
SST 09330–00021

(c) Using SST, remove the companion flange.
SST 09950–30010 (09951–03010, 09953–03010, 09954–03010, 09955–03030, 09956–03020)

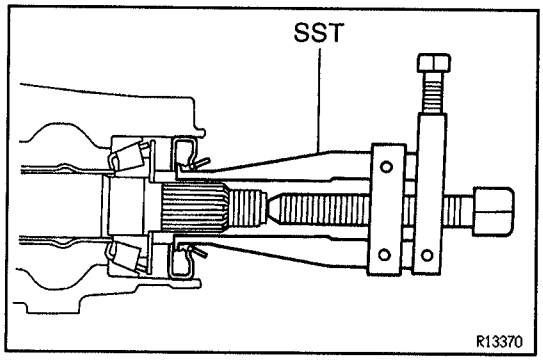

4. REMOVE OIL SEAL AND OIL SLINGER

(a) Using SST, remove the oil seal.
SST 09308–10010

(b) Remove the oil slinger.

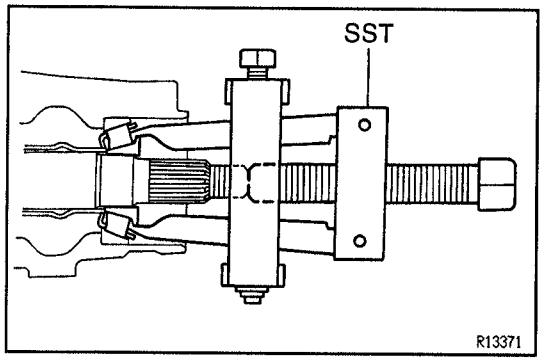

5. REMOVE REAR BEARING AND BEARING SPACER

(a) Using SST, remove the rear bearing from the drive pinion.
SST 09556–22010

(b) Remove the bearing spacer.

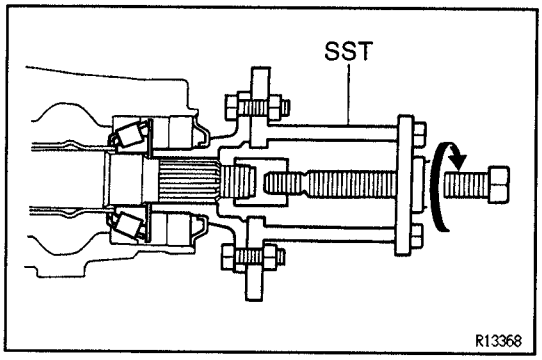

6. INSTALL BEARING SPACER, REAR BEARING AND OIL SLINGER

(a) Install a new bearing spacer and place the rear bearing and oil slinger.

(b) Using SST and the companion flange, install the rear bearing then remove the companion flange.
SST 09950–30010 (09951–03010, 09953–03010, 09954–03010, 09955–03030, 09956–03020)

SA

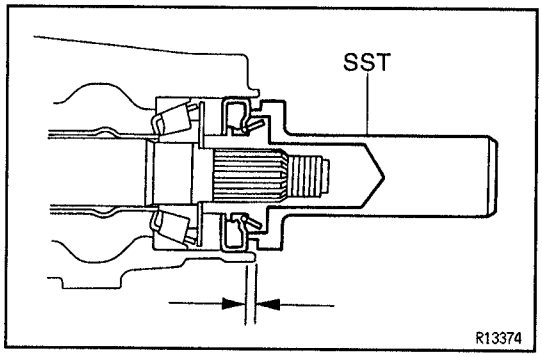

7. INSTALL NEW OIL SEAL

(a) Coat a new oil seal lip with MP grease.

(b) Using SST and a hammer, install the oil seal.
SST 09554–22010
Oil seal drive in depth:
4.5 mm (0.177 in.)

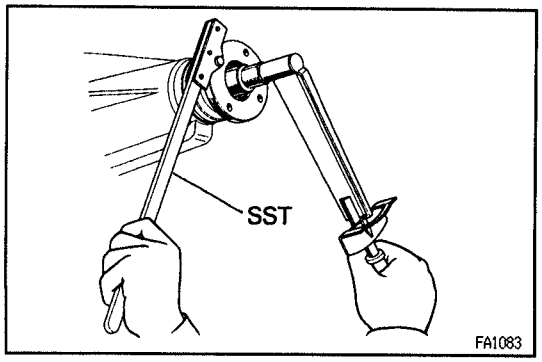

8. INSTALL COMPANION FLANGE

(a) Place the companion flange on the drive pinion.

(b) Coat the threads of a new nut with hypoid gear oil.

(c) Using SST to hold the flange, torque the nut.
SST 09330–00021
Torque: 108 N·m (1,100 kgf·cm, 80 ft·lbf)

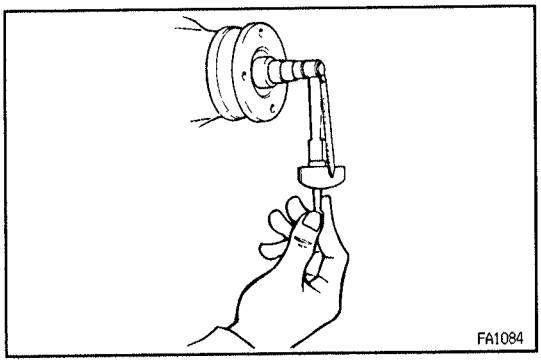

9. ADJUST DRIVE PINION PRELOAD

Using a torque wrench, measure the preload of the backlash between the drive pinion and ring gear.

Preload (at starting):

0.6–1.0 N·m (6–10 kgf·cm, 5.2–8.7 in.·lbf)

If the preload is greater than the specification, replace the bearing spacer.

If the preload is less than the specification, retighten the nut 13 N·m (130 kgf·cm, 9 ft·lbf) a little at a time until the specified preload is reached.

Maximum torque:

223 N·m (2,275 kgf·cm, 165 ft·lbf)

If the maximum torque is exceeded while retightening the nut, replace the bearing spacer and repeat the preload procedure. Do not back off the pinion nut to reduce the preload.

10. STAKE DRIVE PINION NUT

11. INSTALL FRONT PROPELLER SHAFT

(See page PR–14)

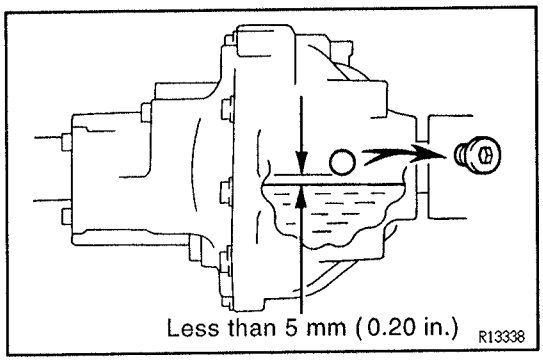

12. FILL DIFFERENTIAL WITH GEAR OIL

Torque:

Filler plug 39 N·m (400 kgf·cm, 29 ft·lbf)

Drain plug 65 N·m (660 kgf·cm, 48 ft·lbf)

(w/ A.D.D.)

Oil type:

Hypoid gear oil API GL–5

Recommended oil viscosity:

SAE 75W–90

Capacity:

1.15 liters (1.22 US qts, 1.01 Imp.qts)

(w/o A.D.D.)

Oil type:

Hypoid gear oil API GL–5

Recommended oil viscosity:

Above –18°C (0°F) SAE 90

Below –18°C (0°F) SAE 80W or 80W–90

Capacity:

1.10 liters (1.16 US qts, 0.97 Imp.qts)

13. INSTALL UNDER COVER

SA

ASSEMBLY REMOVAL AND INSTALLATION

COMPONENTS

SA04U–0A

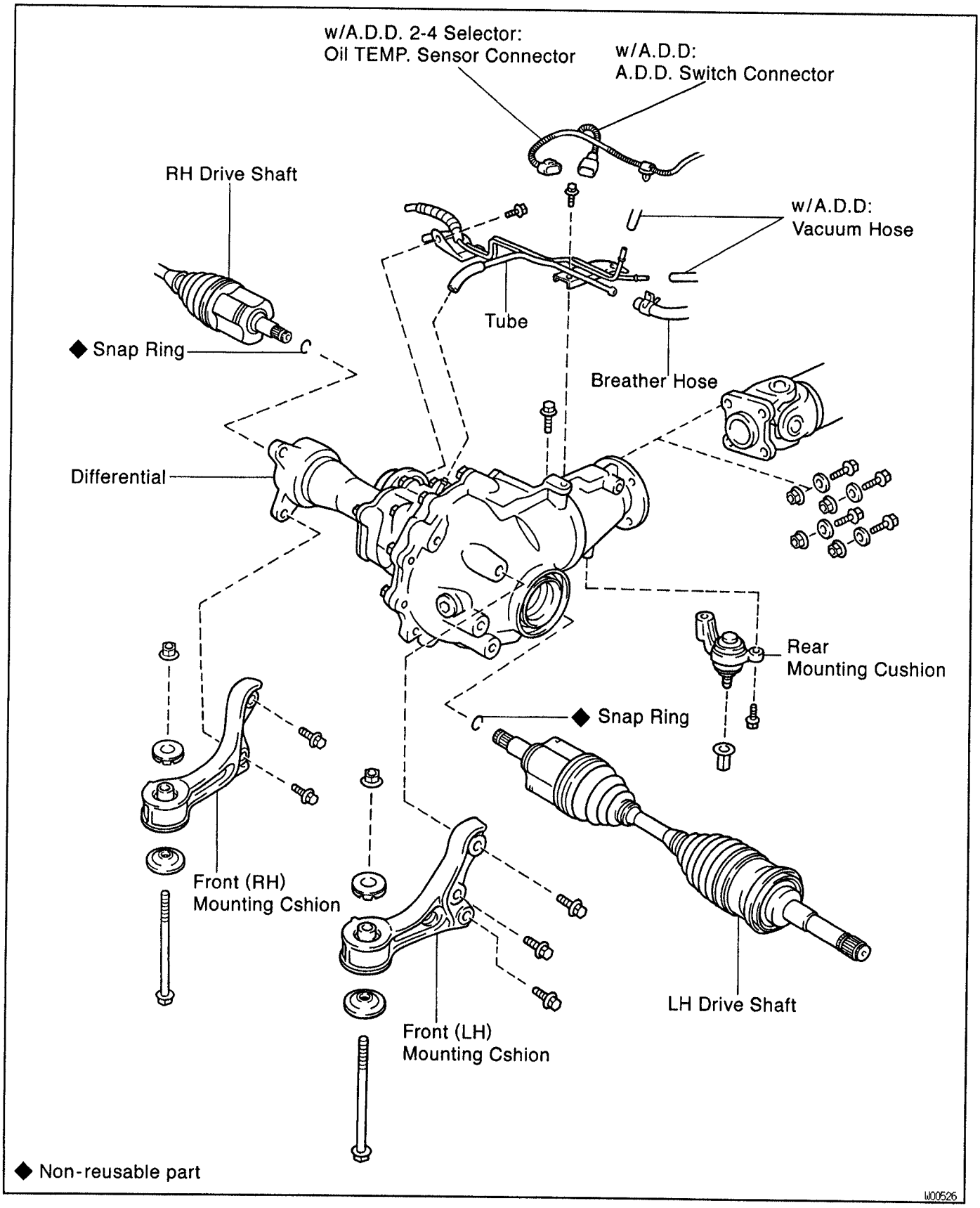

SA

SA27P-01

FRONT DIFFERENTIAL REMOVAL

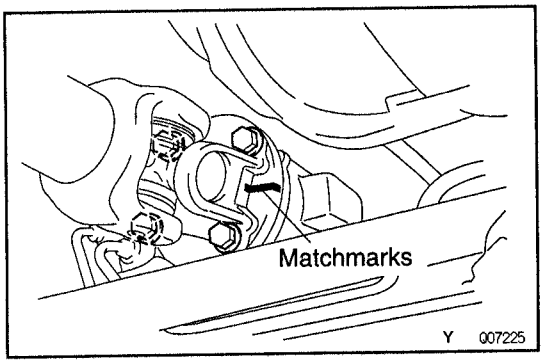

1. **REMOVE UNDER COVER AND DRAIN DIFFERENTIAL OIL**
2. **REMOVE DRIVE SHAFTS**
   (See page SA–18)
3. **DISCONNECT FRONT PROPELLER SHAFT**

(a) Place matchmarks on the flanges.

(b) Remove the 4 nuts, washers and bolts, then disconnect the propeller shaft.
Torque: 74 N·m (750 kgf·cm, 54 ft·lbf)

4. **REMOVE TUBE FROM DIFFERENTIAL**

(a) w/ A.D.D.:
Disconnect the vacuum hoses, breather hose, A.D.D. switch connector and oil TEMP. sensor connector (w/ 2–4 selector).
w/o A.D.D.:
Disconnect the breather hose.

(b) Remove the 2 bolts and tube from the differential.
Torque: 13 N·m (130 kgf·cm, 9 ft·lbf)

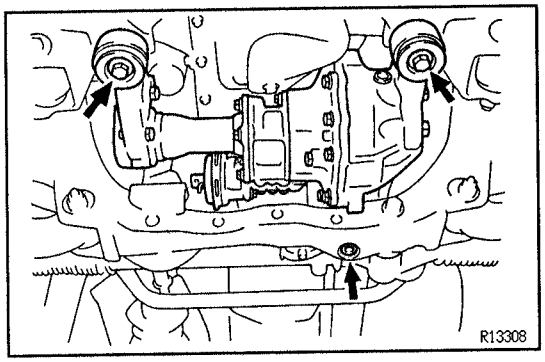

5. **REMOVE FRONT DIFFERENTIAL ASSEMBLY**

(a) Support the front differential with a jack.

(b) Remove the rear mounting nut.
Torque: 87 N·m (890 kgf·cm, 64 ft·lbf)

(c) Remove the front mounting bolts.
Torque: 137 N·m (1,400 kgf·cm, 101 ft·lbf)

(d) Lower the jack and remove the front differential assembly.

6. **REMOVE DIFFERENTIAL MOUNTING CUSHIONS**

(a) Remove the rear mounting cushion.
Torque: 108 N·m (1,100 kgf·cm, 80 ft·lbf)

(b) Remove the front mounting cushions.
Torque: 157 N·m (1,600 kgf·cm, 116 ft·lbf)

SA

SA27Q-01

FRONT DIFFERENTIAL INSTALLATION

Installation is in the reverse order of removal.
HINT: After installation, fill differential with gear oil.
(See page SA–40)

DIFFERENTIAL CARRIER
COMPONENTS

8A04X-0C

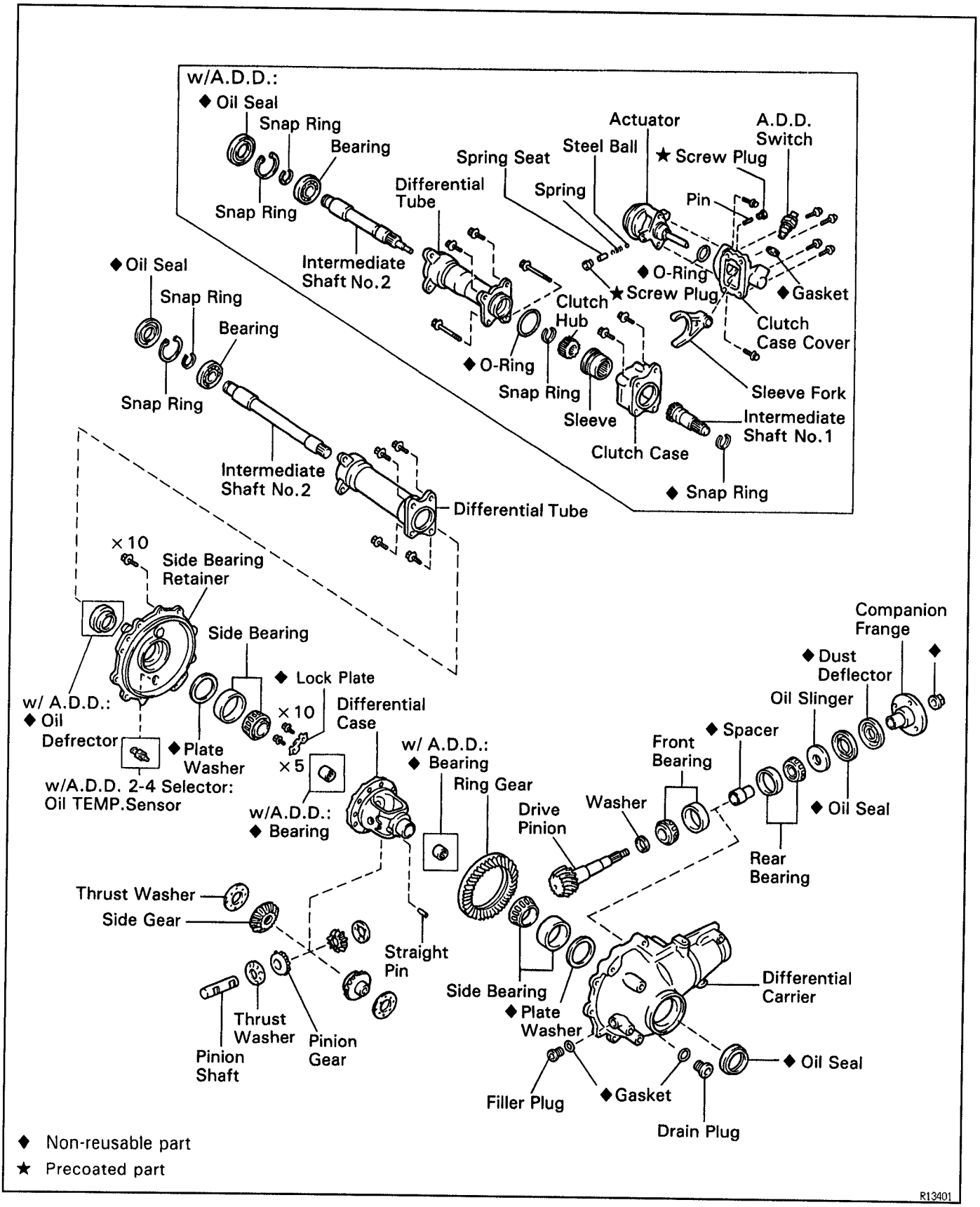

SA

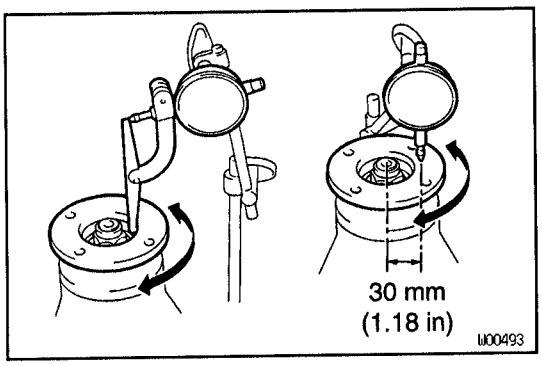

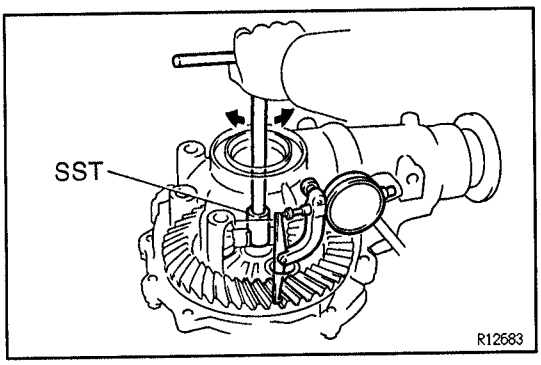

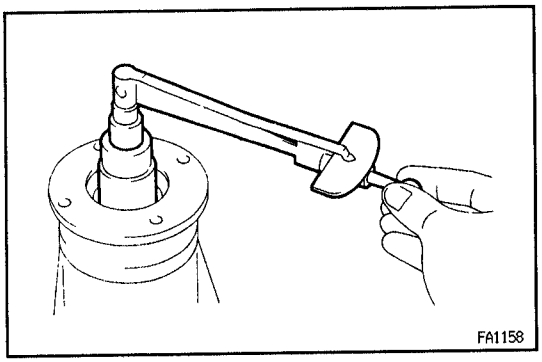

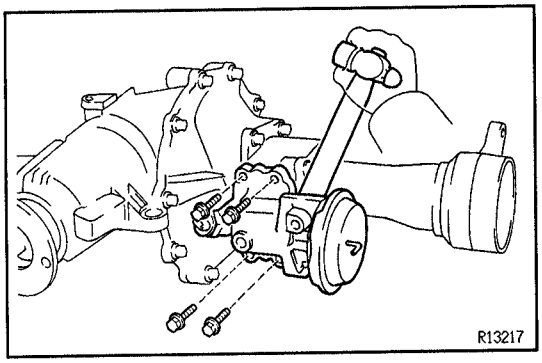

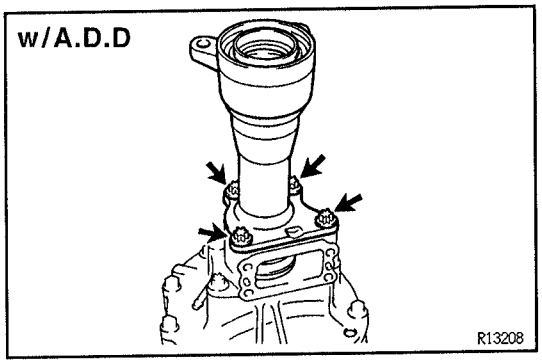

DIFFERENTIAL CARRIER INSPECTION

SA1X1-02

1. CHECK RUNOUT OF COMPANION FLANGE

Using a dial indicator, measure the vertical and lateral runout of the companion flange.

Maximum runout:

0.10 mm (0.0039 in.)

If the runout is greater than the maximum, replace the companion flange.

2. CHECK RING GEAR BACKLASH

Using SST and a dial indicator, measure the ring gear backlash.

SST 09564–32011

Backlash:

0.10–0.18 mm (0.0039–0.0071 in.)

If the backlash is not within the specification, adjust the side bearing preload or repair as necessary.

3. MEASURE DRIVE PINION PRELOAD

Using a torque wrench, measure the preload of backlash between the drive pinion and ring gear.

Preload (at starting):

0.6–1.0 N·m (6–10 kgf·cm, 5.2–8.7 in.·lbf)

4. CHECK TOTAL PRELOAD

Using a torque wrench, measure the preload with the teeth of the drive pinion and ring gear in contact.

Total preload (at starting):

In addition to drive pinion preload.

0.4–0.6 N·m (4–6 kgf·cm, 3.5–5.2 in.·lbf)

If necessary, disassemble and inspect the differential.

DIFFERENTIAL CARRIER DISASSEMBLY

SA1X2-02

1. w/ A.D.D.:
REMOVE A.D.D. ACTUATOR

(a) Remove the 4 bolts.
(b) Using a hammer handle, remove the actuator.

2. REMOVE DIFFERENTIAL TUBE
w/ A.D.D.:

(a) Remove the 4 torx bolts.
Torx socket E14 (Part No.09044–00010 or locally manufactured tool)
(b) Using a plastic hammer, tap on the differential tube to remove it.
(c) Remove the sleeve.
(d) Remove the O–ring from the differential tube.

w/o A.D.D.:

(a) Remove the 4 bolts.

(b) Using a plastic hammer, tap on the differential tube to remove it.

3. w/ A.D.D.:

REMOVE CLUTCH CASE

(a) Remove the 2 torx bolts.
Torx socket E14 (Part No.09044–00010 or locally manufactured tool)

(b) Using a plastic hammer, tap on the clutch case to remove it.

4. REMOVE SIDE OIL SEAL

Using SST, remove the side oil seal.
SST 09308–00010

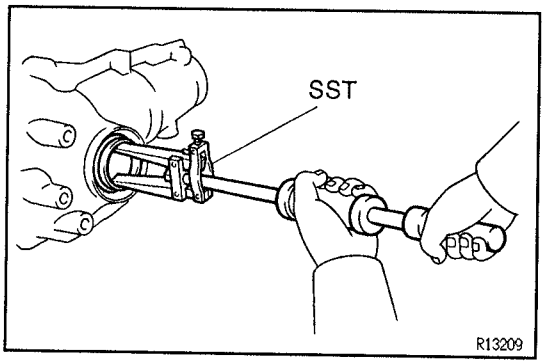

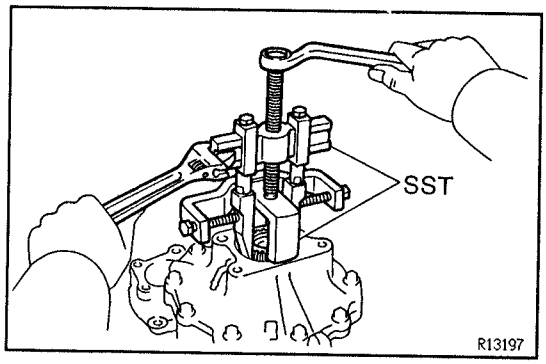

5. w/ A.D.D.:

REMOVE INTERMEDIATE SHAFT NO.1

Using SST, remove the intermediate shaft No.1.
SST 09350–20015, 09950–40010 (09951–04010, 09952–04010, 09953–04020, 09954–04010, 09955–04010, 09957–04010, 09958–04010)

SA

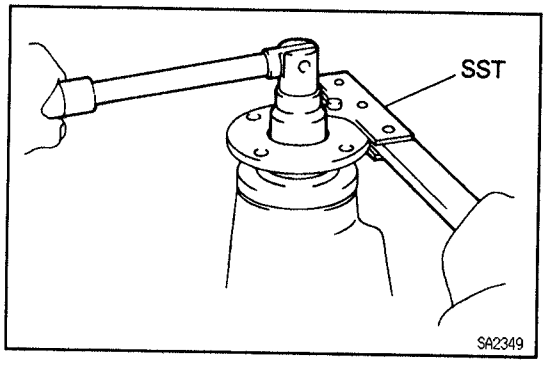

6. REMOVE COMPANION FLANGE

(a) Using a chisel and a hammer, unstake the nut.

(b) Using SST to hold the flange, remove the nut.
SST 09330–00021

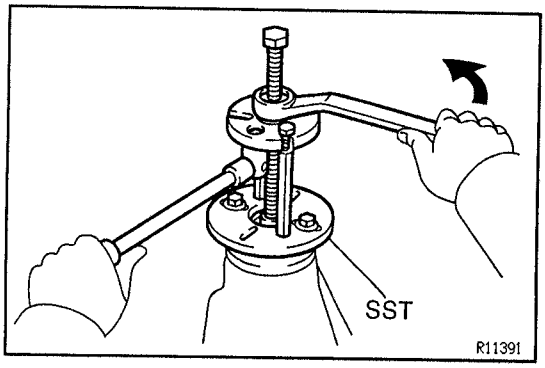

(c) Using SST, remove the companion flange.
SST 09950–30010 (09951–03010, 09953–03010, 09954–03010, 09955–03030, 09956–03020)

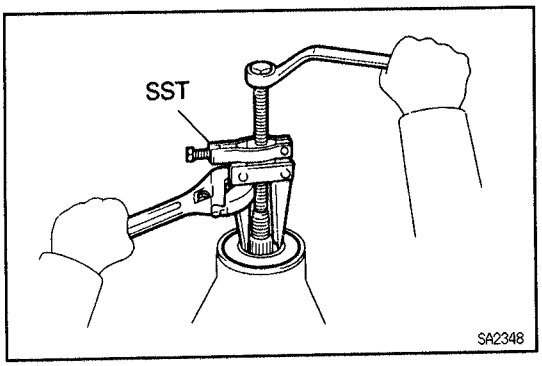

7. REMOVE OIL SEAL AND OIL SLINGER

(a) Using SST, remove the oil seal.
SST 09308–10010

(b) Remove the oil slinger.

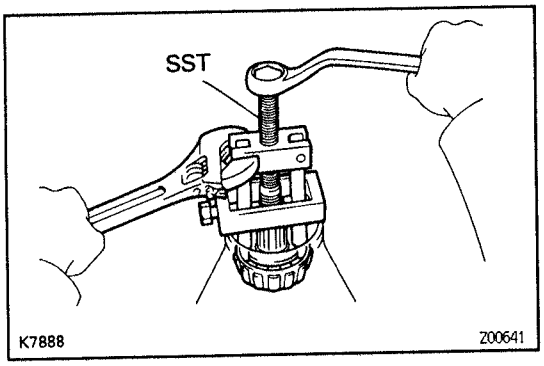

8. REMOVE REAR BEARING AND BEARING SPACER

(a) Using SST, remove the rear bearing from the drive pinion.
SST 09556–22010

(b) Remove the bearing spacer.

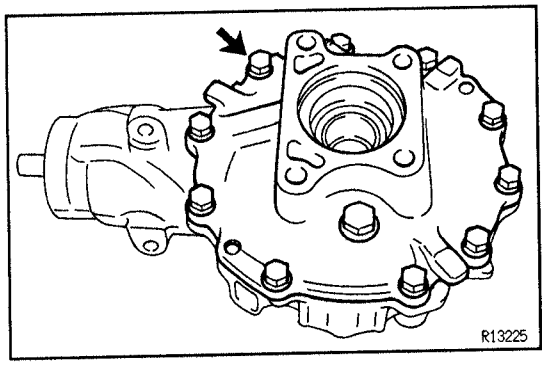

9. w/ A.D.D. 2–4 selector:
REMOVE OIL TEMP. SENSOR

10. REMOVE SIDE BEARING RETAINER

Remove the 10 bolts and tap out the retainer with a plastic hammer.

11. REMOVE DIFFERENTIAL CASE ASSEMBLY

12. REMOVE DRIVE PINION FROM DIFFERENTIAL CARRIER

SA

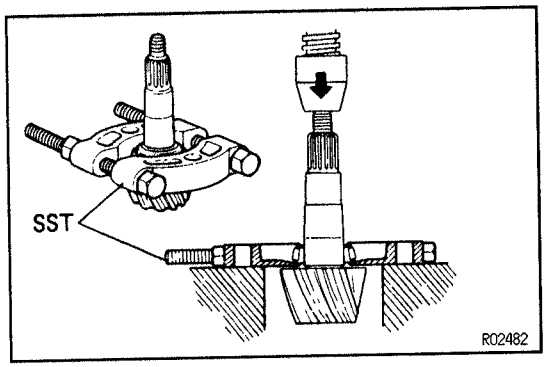

13. REMOVE DRIVE PINION FRONT BEARING

Using SST and a press, remove the bearing and washer from the drive pinion.
SST 09950–00020

HINT: If the drive pinion or ring gear are damaged replace them as a set.

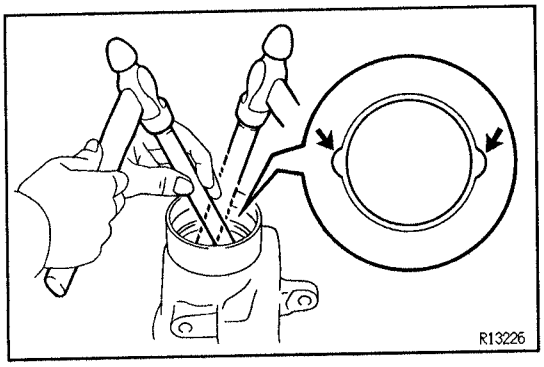

14. REMOVE DRIVE PINION BEARING OUTER RACES

(a) Using a brass bar and a hammer, remove the front bearing outer race.

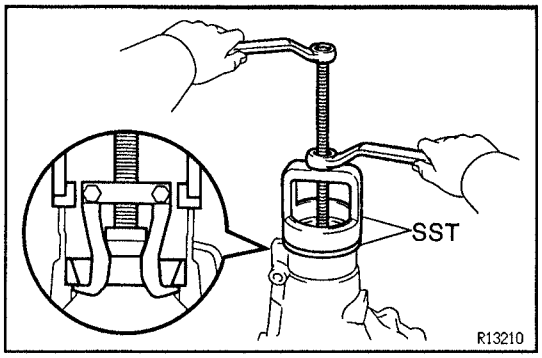

(b) Using SST, remove the rear bearing outer race.
SST 09502–12010, 09612–65014 (09612–01020, 09612–01050)

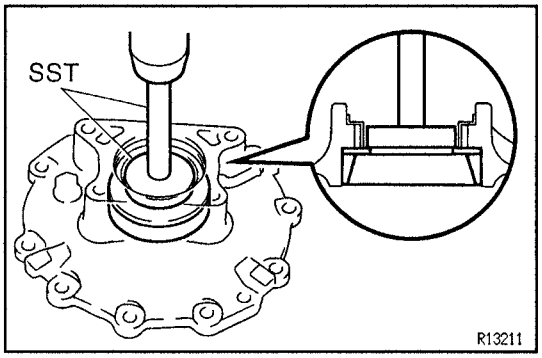

15. REMOVE SIDE BEARING OUTER RACES

HINT:

- Measure the plate washer and note the thickness.
- Tag the bearing outer races to show the location for reassembly.

(a) Using SST and a press, remove the plate washer and outer race from the bearing retainer.
SST 09950–60010 (09951–00540), 09550–70010 (09951–01500)

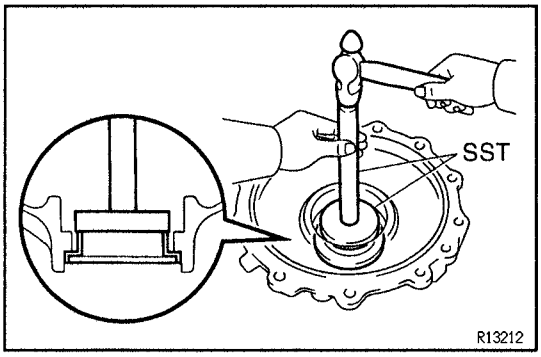

(b) w/ A.D.D.:
Using SST, remove the oil deflector from the bearing retainer.
SST 09950–60010 (09951–00600), 09950–70010 (09951–07150)

SA

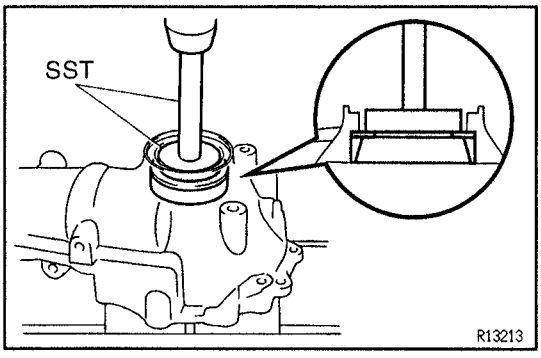

(c) Using SST and a press, remove the plate washer and outer race from the differential carrier.
SST 09950–60010 (09951–00650), 09950–70010 (09951–07150)

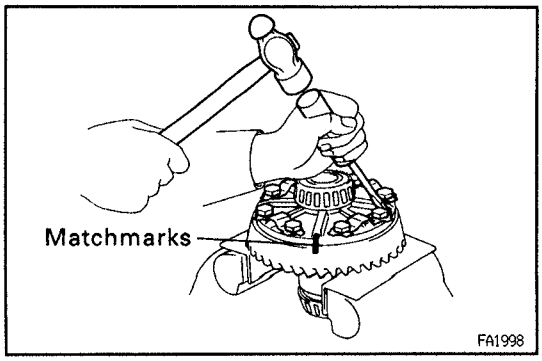

16. REMOVE RING GEAR

(a) Place matchmarks on the ring gear and differential case.
(b) Using a screwdriver, unstake the lock plates.
(c) Remove the 10 bolts and 5 lock plates.
(d) Using a plastic hammer, tap on the ring gear to separate it from the differential case.

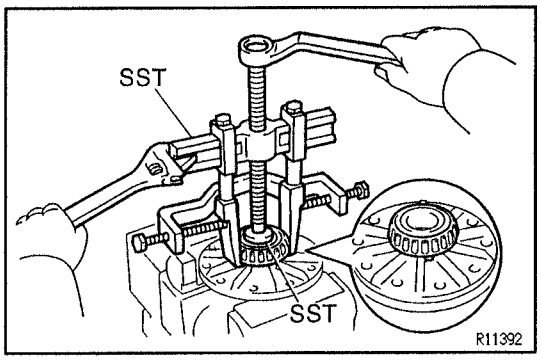

17. REMOVE SIDE BEARINGS

Using SST, remove the side bearings from the differential case.

SST 09950–40010 (09951–04010, 09952–04010, 09953–04020, 09954–04010, 09954–04010, 09955–04060, 09957–04010, 09958–04010), 09950–60010 (09951–00480)

HINT: Fix the claws of SST to the notch in the differential case.

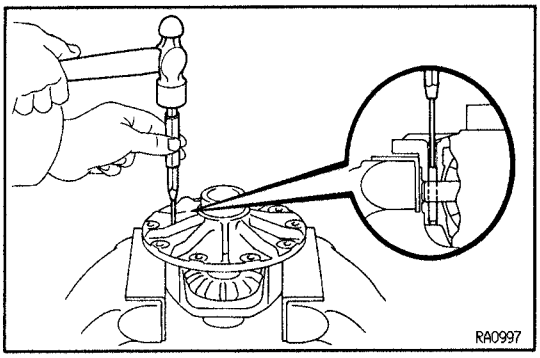

18. DISASSEMBLE DIFFERENTIAL CASE ASSEMBLY

(a) Using a pin punch and a hammer, remove the straight pin.

(b) Remove these parts:

- Pinion shaft
- Pinion gears
- Pinion gear thrust washers
- Side gears
- Side gear thrust washers

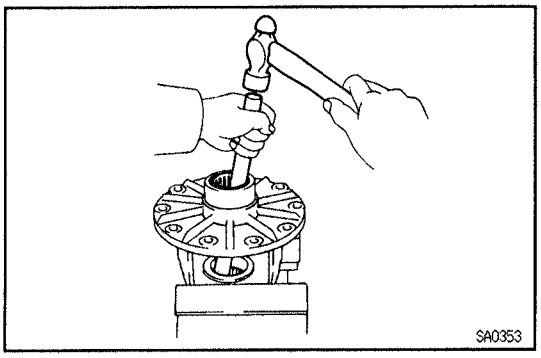

19. w/ A.D.D.:
REMOVE BEARING

Using a brass bar and a hammer, remove the 2 bearings.

SA

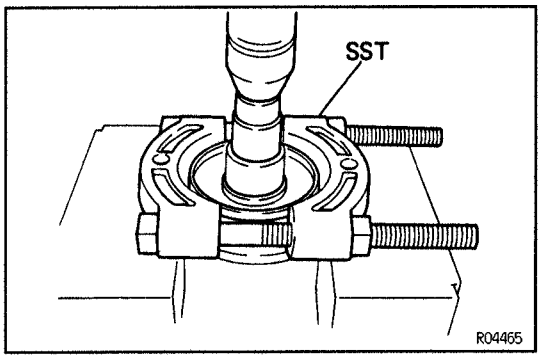

COMPANION FLANGE DUST DEFLECTOR REPLACEMENT

SA0KA-04

1. REMOVE DUST DEFLECTOR

Using SST and a press, remove the dust deflector.

SST 09950–00020

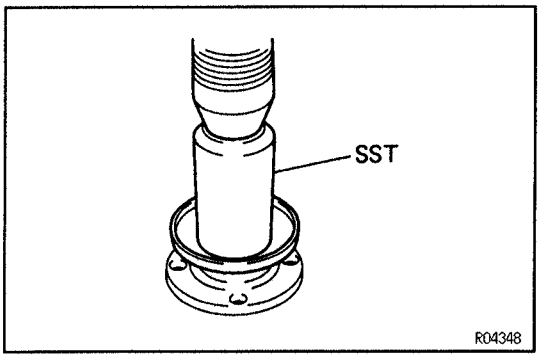

2. INSTALL NEW DUST DEFLECTOR

Using SST and a press, install a new dust deflector.

SST 09636–20010

SA1X4-02

INTERMEDIATE SHAFT NO.2 REPLACEMENT

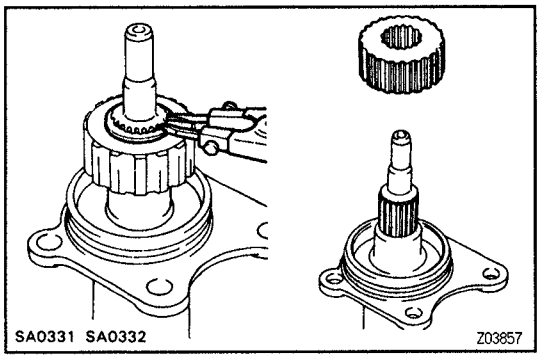

1. w/ A.D.D.: REMOVE CLUTCH HUB

(a) Using a snap ring expander, remove the snap ring.
(b) Remove the clutch hub from the intermediate shaft No.2.

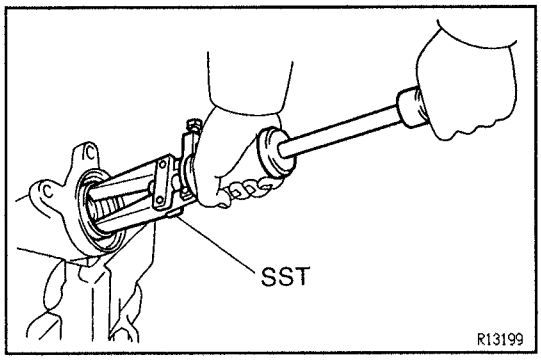

2. REMOVE OIL SEAL

Using SST, remove the oil seal from the tube.
SST 09308–00010

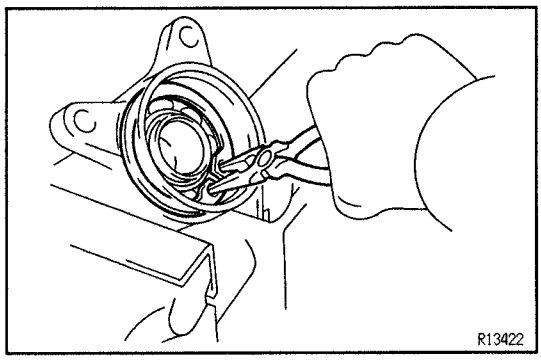

3. REMOVE INTERMEDIATE SHAFT NO.2 FROM TUBE

(a) Using needle nose pliers, remove the snap ring.
(b) Remove the shaft from the tube.

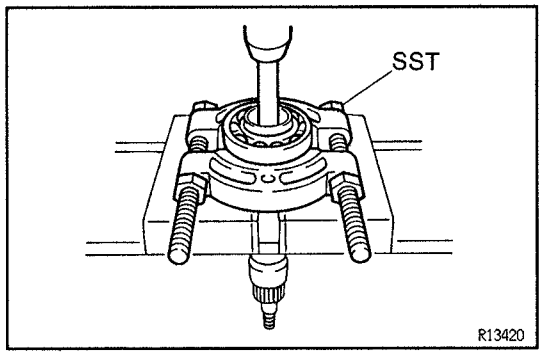

4. REMOVE INTERMEDIATE SHAFT NO.2 BEARING

(a) Using a snap ring expander, remove the snap ring.
(b) Using SST, a brass bar and a press, remove the bearing.
SST 09950–00020

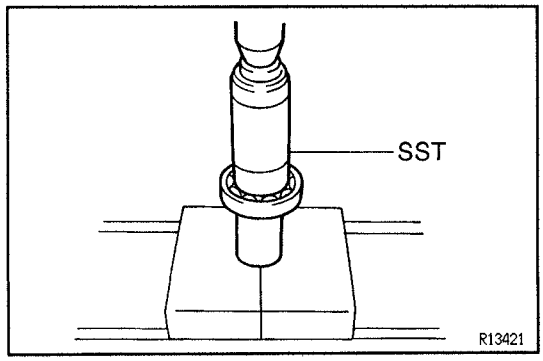

5. INSTALL NEW INTERMEDIATE SHAFT NO.2 BEARING

(a) Using SST and a press, install a new bearing.
SST 09309–37010
(b) Using a snap ring expander, install the snap ring.

6. INSTALL INTERMEDIATE SHAFT NO.2 TO TUBE

(a) Install the shaft into the tube.
(b) Using needle nose pliers, install the snap ring.

SA

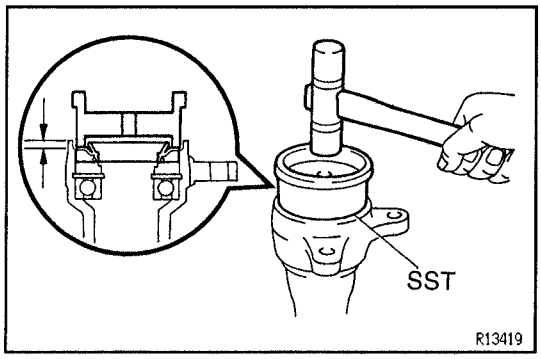

7. INSTALL NEW OIL SEAL

(a) Using SST, install a new oil seal.
SST 09223–15020
Oil seal drive in depth:
5.5 mm (0.217 in.)

(b) Coat the oil seal lip with MP grease.

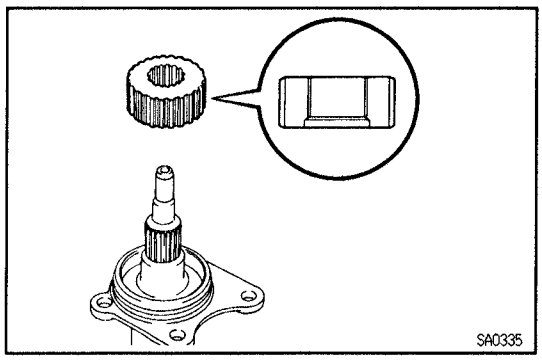

8. w/ A.D.D.:
INSTALL CLUTCH HUB

(a) Install the clutch hub to the shaft.
(b) Using snap ring pliers, install the snap ring.

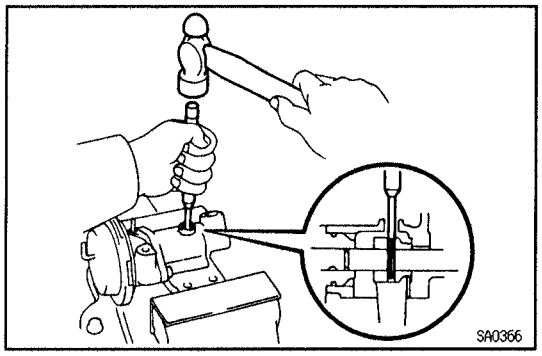

A.D.D. ACTUATOR REPLACEMENT

SA1XS–02

1. REMOVE A.D.D. SWITCH

2. REMOVE SLEEVE FORK PIN

(a) Using a hexagon wrench, remove the screw plug.
(b) Using a pin punch and a hammer, remove the pin through the hole of clutch case cover.

3. SEPARATE ACTUATOR FROM CLUTCH CASE COVER AND REMOVE SLEEVE FORK

(a) Using a hexagon wrench, remove the screw plug.
(b) Remove the spring seat, spring and steel ball.
(c) Remove the 2 bolts and actuator from the clutch case cover.
(d) Separate the actuator from the clutch case cover and remove the sleeve fork.
(e) Remove the O–ring from the actuator.

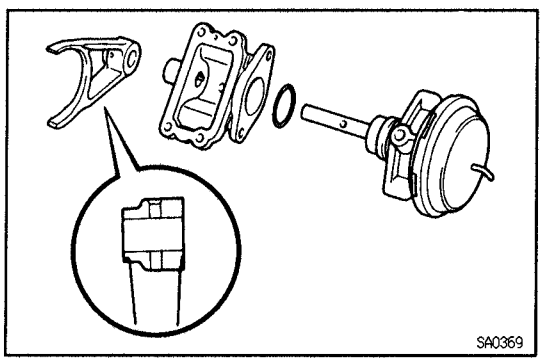

4. INSTALL SLEEVE FORK AND ACTUATOR INTO CLUTCH CASE COVER

(a) Install a new O–ring to the actuator.
(b) Coat the O–ring with MP grease.
(c) Place the sleeve fork and install the actuator to the clutch case cover.
(d) Torque the 2 bolts.
Torque: 21 N·m (210 kgf·cm, 15 ft·lbf)
(e) Install the steel ball, spring and spring seat.

(f) Coat the threads of screw plug with FIPG.
FIPG:
Part No. 08826–00090, THREE BOND 1281 or equivalent

(g) Using a hexagon wrench, install the screw plug.
Torque: 13 N·m (130 kgf·cm, 9 ft·lbf)

5. INSTALL SLEEVE FORK PIN

(a) Using a pin punch and a hammer, install the pin through the hole of clutch case cover.

(b) Coat the threads of screw plug with FIPG.
FIPG:
Part No. 08826–00090, THREE BOND 1281 or equivalent

(c) Using a hexagon wrench, install the screw plug.
Torque: 20 N·m (200 kgf·cm, 14 ft·lbf)

6. INSTALL A.D.D. SWITCH

Install a new gasket and indicator switch.
Torque: 40 N·m (410 kgf·cm, 30 ft·lbf)

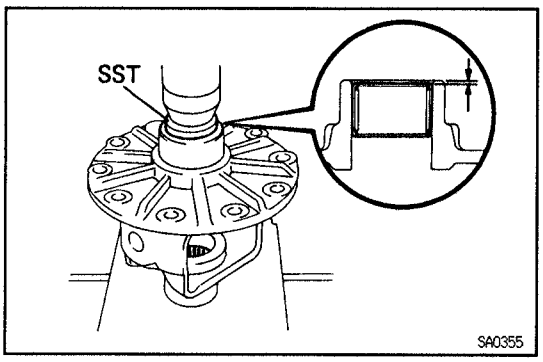

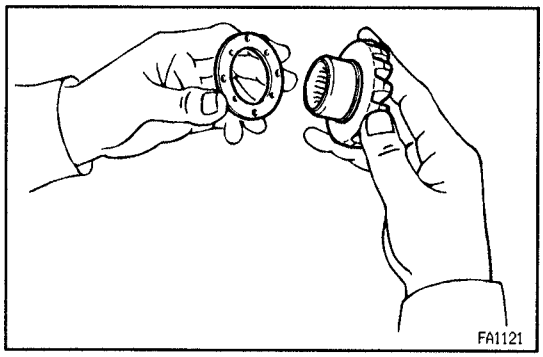

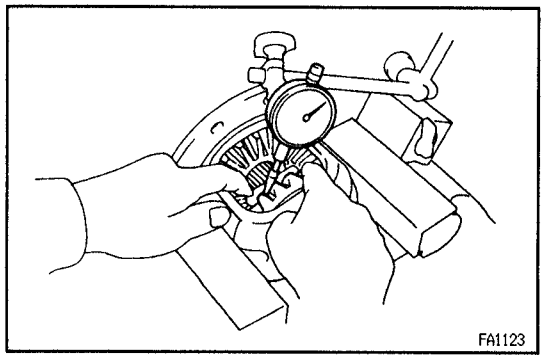

DIFFERENTIAL CARRIER ASSEMBLY

SA1X7–02

1. w/A.D.D.:
INSTALL NEW BEARINGS

Using SST and a press, install new bearings.
SST 09950–60010 (09951–00380)
Bearing press in depth:
0.3 ± 0.3 mm (0.012 ± 0.012 in.)

SA

2. ASSEMBLE DIFFERENTIAL CASE

(a) Install the proper thrust washers on the side gears.
HINT: Using the table below, select thrust washers which will ensure that the backlash is within the specifications.
Washer thickness

Thickness mm (in.)	Thickness mm (in.)
0.96–1.04 (0.0378–0.0409)	1.16–1.24 (0.0457–0.0488)
1.06–1.14 (0.0417–0.0449)	1.26–1.34 (0.0496–0.0528)

(b) Install the side gears, pinion gears, pinion gear thrust washers and pinion shaft in the differential case.
HINT: Align the holes of the differential case and pinion shaft.

(c) Measure the side gear backlash while holding one pinion gear toward the differential case.
Backlash:
0–0.20 mm (0–0.0079 in.)
If the backlash is not within the specification, install side gear thrust washers with different thicknesses.

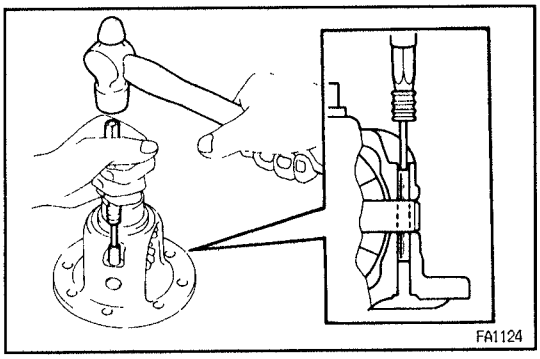

3. INSTALL STRAIGHT PIN AND STAKE DIFFERENTIAL CASE

(a) Using a pin punch and a hammer, install the straight pin through the differential case and hole of the pinion shaft.

(b) Stake the differential case.

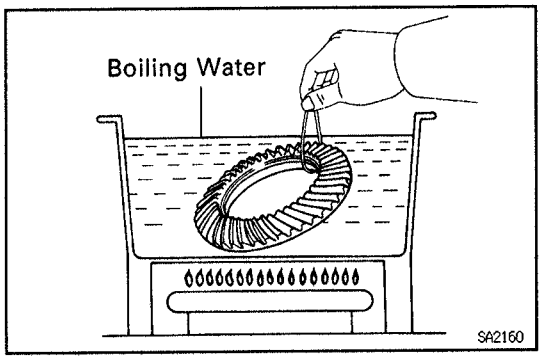

4. INSTALL RING GEAR ON DIFFERENTIAL CASE

(a) Clean the contact surfaces of the differential case and ring gear.

(b) Heat the ring gear to about 100°C (212°F) in boiling water.

(c) Carefully remove the ring gear from the water.

(d) After the moisture on the ring gear has completely evaporated, quickly install the ring gear to the differential case.
HINT: Align the matchmarks on the ring gear and differential case.

(e) Temporarily install 5 new lock plates and 10 bolts so that the bolt holes in the ring gear and differential case are not misaligned.

(f) After the ring gear has cooled sufficiently, torque the ring gear set bolts.
Torque: 97 N·m (985 kgf·cm, 71 ft·lbf)

SA

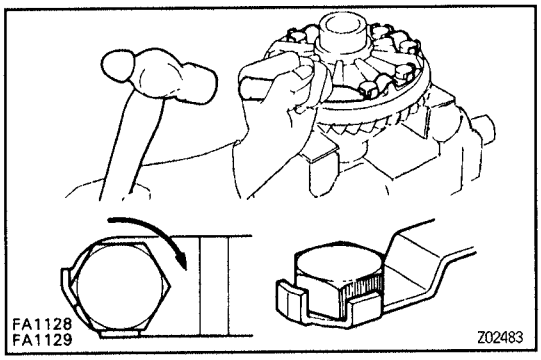

(g) Using a hammer and a drift punch, stake the lock plates.
HINT: Stake one claw flush with the flat surface of the bolt. For the claw contacting the protruding portion of the bolt, stake only the half poriton of the tightening side.

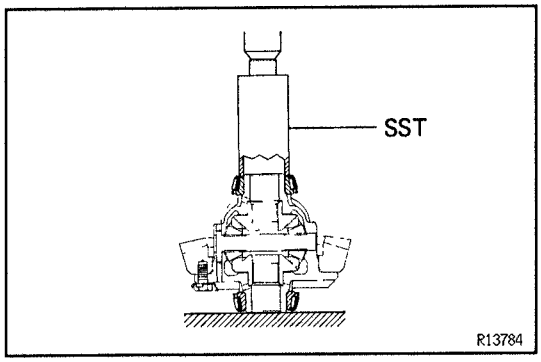

5. INSTALL SIDE BEARINGS

Using SST and a press, install the bearing into the differential case.
SST 09226–10010

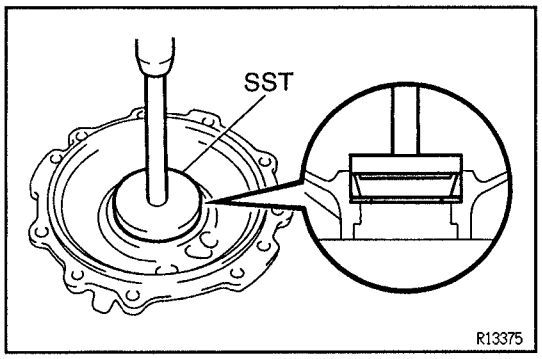

6. INSTALL SIDE BEARING OUTER RACES

HINT: When replacing the side bearings, fit the thinnest washers to each bearing and when reusing the bearings, fit the washers with the same thickness as removed.

(a) Install a new plate washer to the bearing retainer.

(b) Using SST and a press, install the bearing outer race.
SST 09950–60020 (09951–00790),
09950–70010 (09951–07150)

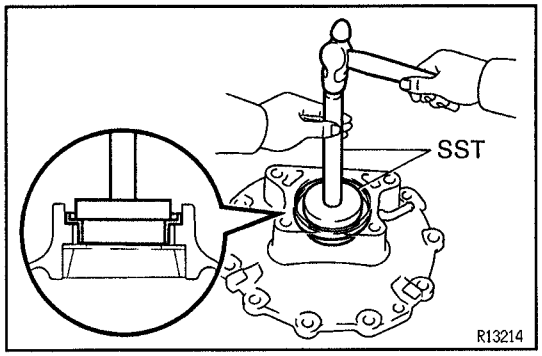

(c) w/ A.D.D.:
Using SST, install a new oil deflector.
SST 09950–60020 (09951–00710),
09950–70010 (09951–07150)

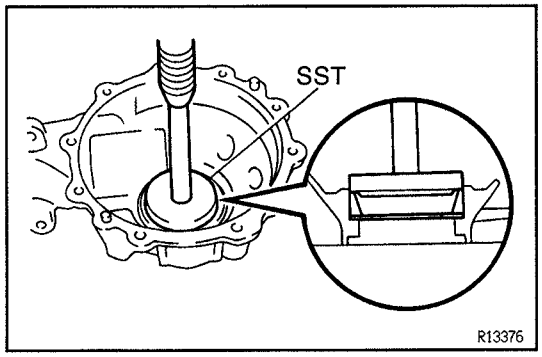

(d) Install a new plate washer to the differential carrier.

(e) Using SST and a press, install the bearing outer race.
SST 09950–60020 (09951–00790),
09950–70010 (09951–07150)

SA

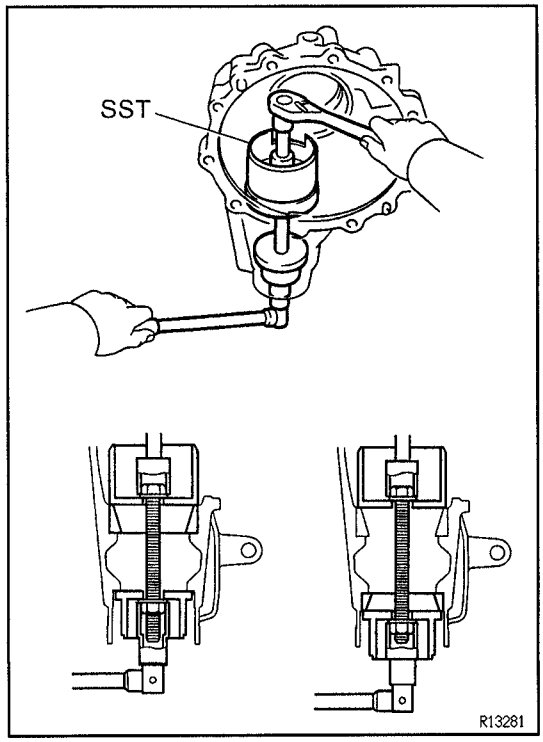

7. INSTALL DRIVE PINION FRONT AND REAR BEARING OUTER RACES

Using SST, install the outer races.
SST 09570–22011

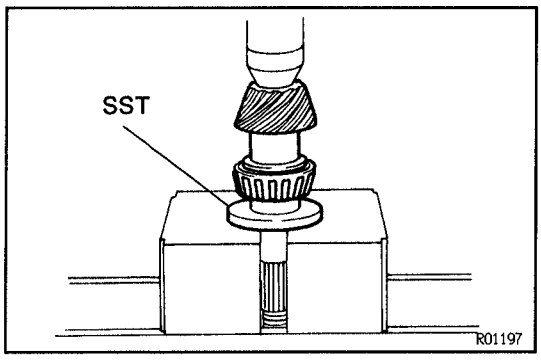

8. INSTALL DRIVE PINION FRONT BEARING

(a) Install the washer on the drive pinion.
HINT: First fit a washer with the same thickness as the washer which was removed, then after checking the tooth contact pattern, replace the washer with one of a different thickness if necessary.

(b) Using SST and a press, install the front bearing onto the drive pinion.
SST 09506–30012

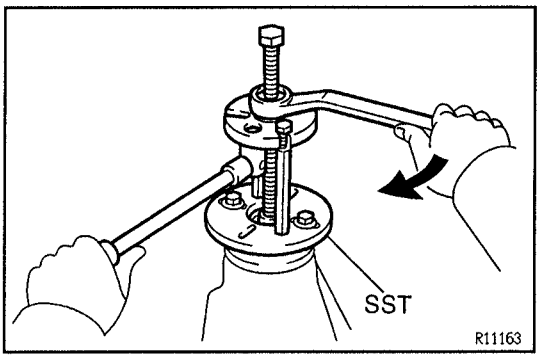

9. TEMPORARILY ADJUST DRIVE PINION PRELOAD

(a) Install the drive pinion and oil slinger.
HINT: Assemble the spacer and oil seal after adjusting the ring gear tooth contact pattern.

(b) Using SST, install the rear bearing, oil slinger and companion flange.
SST 09950–30010 (09951–03010, 09953–03010, 09954–03010, 09955–03030, 09956–03020)

(c) Coat the threads of the nut with hypoid gear oil.

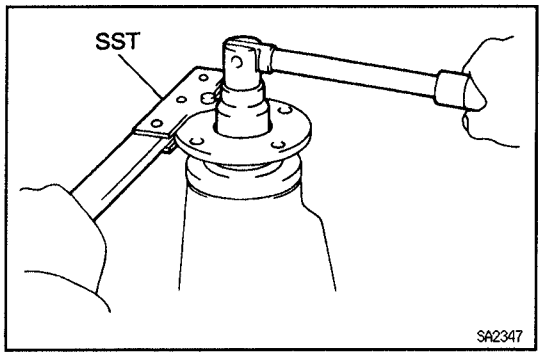

(d) Adjust the drive pinion preload by tightening the companion flange nut.
Using SST to hold the flange, tighten the nut.
SST 09330–00021
NOTICE: As there is no spacer, tighten the nut a little at a time, being careful not to overtighten it.

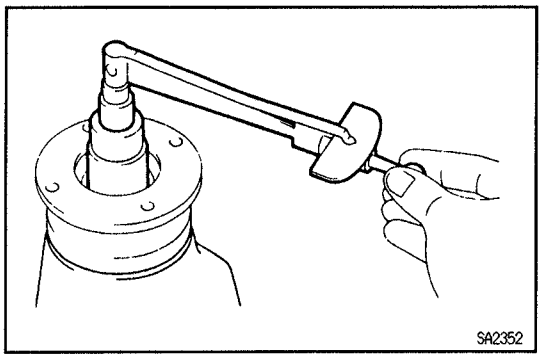

(e) Using a torque wrench, measure the preload.
New bearing preload (at starting):
1.2–1.9 N·m (12–19 kgf·cm, 10.4–16.5 in.·lbf)
Reused bearing preload (at starting):
0.6–1.0 N·m (6–10 kgf·cm, 5.2–8.7 in.·lbf)

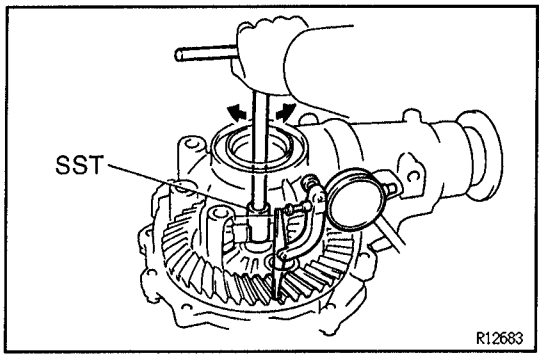

10. INSTALL DIFFERENTIAL CASE IN DIFFERENTIAL CARRIER

11. ADJUST RING GEAR BACKLASH

(a) Install the side bearing retainer with the 10 bolts.
Torque: 69 N·m (700 kgf·cm, 51 ft·lbf)

(b) Using SST and a dial indicator, measure the ring gear backlash.
SST 09564–32011
Backlash:
0.10–0.18 mm (0.0039–0.0070 in.)

SA

(c) If it is not within the specification, adjust by either in creasing or decreasing the washers on both sides by an equal amount.
HINT: There should be no clearance between the plate washer and case.
Ensure that there is ring gear backlash.

Washer thickness

Thickness mm (in.)	Thickness mm (in.)	Thickness mm (in.)
2.00–2.02 (0.0787–0.0795)	2.27–2.29 (0.0894–0.0902)	2.54–2.56 (0.1000–0.1008)
2.03–2.05 (0.0799–0.0807)	2.30–2.32 (0.0906–0.0913)	2.57–2.59 (0.1012–0.1020)
2.06–2.08 (0.0811–0.0819)	2.33–2.35 (0.0917–0.0925)	2.60–2.62 (0.1024–0.1031)
2.09–2.11 (0.0823–0.0831)	2.36–2.38 (0.0929–0.0937)	2.63–2.65 (0.1035–0.1043)
2.12–2.14 (0.0835–0.0843)	2.39–2.41 (0.0941–0.0949)	2.66–2.68 (0.1047–0.1055)
2.15–2.17 (0.0846–0.0854)	2.42–2.44 (0.0953–0.0961)	2.69–2.71 (0.1059–0.1067)
2.18–2.20 (0.0858–0.0866)	2.45–2.47 (0.0965–0.0972)	2.72–2.74 (0.1071–0.1079)
2.21–2.23 (0.0870–0.0878)	2.48–2.50 (0.0976–0.0984)	2.75–2.77 (0.1083–0.1091)
2.24–2.26 (0.0882–0.0890)	2.51–2.53 (0.0988–0.0996)	2.78–2.80 (0.1094–0.1102)

SA

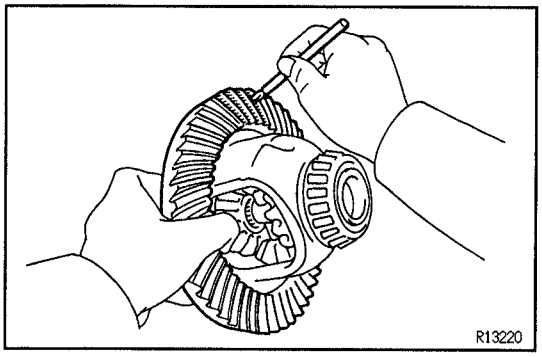

12. MEASURE TOTAL PRELOAD

Using a torque wrench, measure the preload with the teeth of thedrive pinion and ring gear in contact.

Total preload (at starting):

Add drive pinion preload

0.4–0.6 N·m (4–6 kgf·cm, 3.5–5.2 in.·lbf)

13. INSPECT TOOTH CONTACT BETWEEN RING GEAR AND DRIVE PINION

(a) Remove the side bearing retainer and differential case.

(b) Coat 3 or 4 teeth at three different positions on the ring gear with red lead.

(c) Install the differential case and side bearing retainer.
Torque: 69 N·m (700 kgf·cm, 51 ft·lbf)

(d) Hold the companion flange firmly and rotate the ring gear in both directions.

(e) Remove the side bearing retainer and differential case.

(f) Inspect the tooth contact pattern.

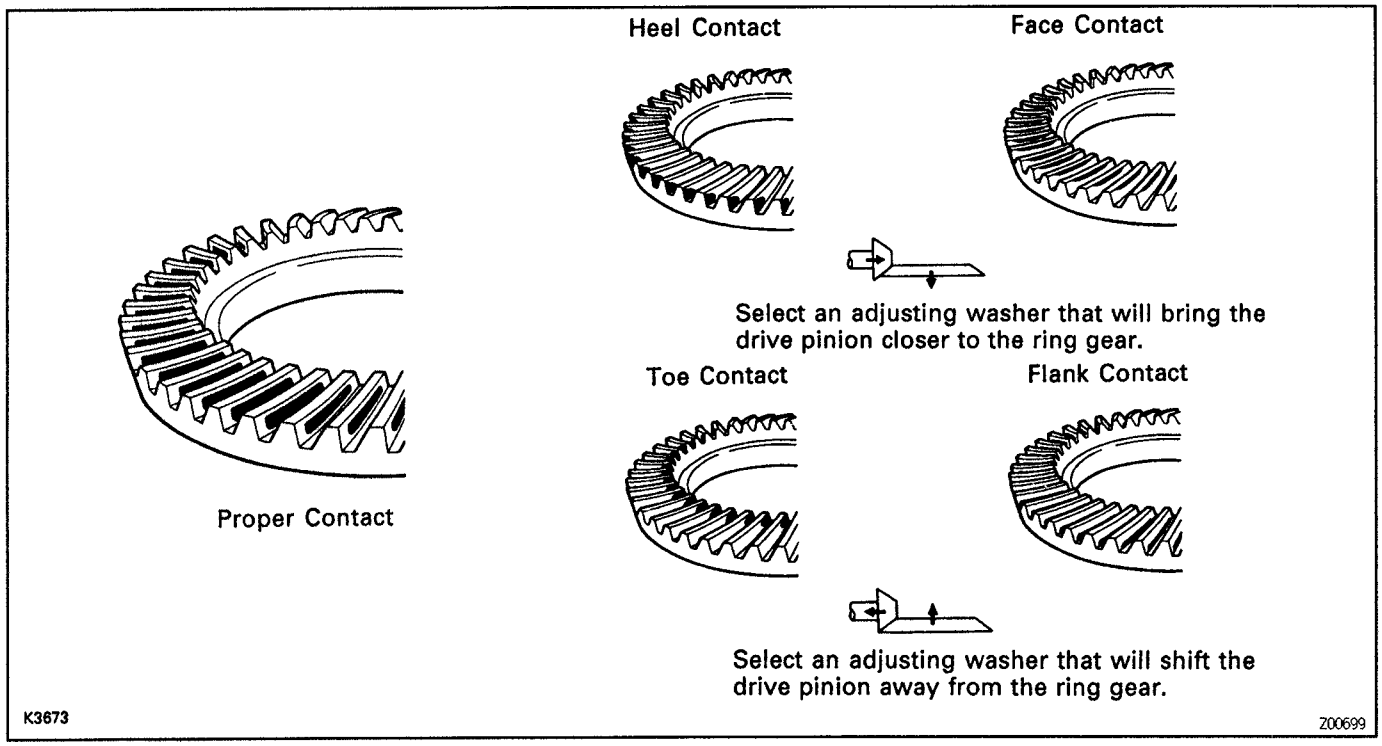

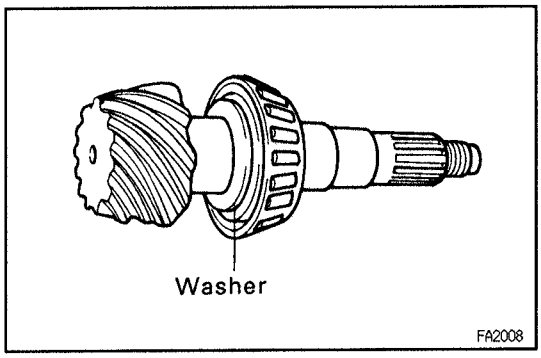

If the teeth are not contacting properly, use the following chart to select a proper washer for correction.

SA

Washer thickness

Thickness mm (in.)	Thickness mm (in.)	Thickness mm (in.)
1.69–1.71 (0.0665–0.0673)	1.93–1.95 (0.0760–0.0768)	2.17–2.19 (0.0854–0.0862)
1.72–1.74 (0.0677–0.0685)	1.96–1.98 (0.0772–0.0780)	2.20–2.22 (0.0866–0.0874)
1.75–1.77 (0.0689–0.0697)	1.99–2.01 (0.0783–0.0791)	2.23–2.25 (0.0878–0.0886)
1.78–1.80 (0.0701–0.0709)	2.02–2.04 (0.0795–0.0803)	2.26–2.28 (0.0890–0.0898)
1.81–1.83 (0.0713–0.0720)	2.05–2.07 (0.0807–0.0815)	2.29–2.31 (0.0902–0.0909)
1.84–1.86 (0.0724–0.0732)	2.08–2.10 (0.0819–0.0827)	2.32–2.34 (0.0913–0.0921)
1.87–1.89 (0.0736–0.0744)	2.11–2.13 (0.0831–0.0839)	–
1.90–1.92 (0.0748–0.0756)	2.14–2.16 (0.0843–0.0850)	–

14. REMOVE COMPANION FLANGE AND OIL SLINGER
(See page SA–45, 46)

15. REMOVE REAR BEARING
(See page SA–46)

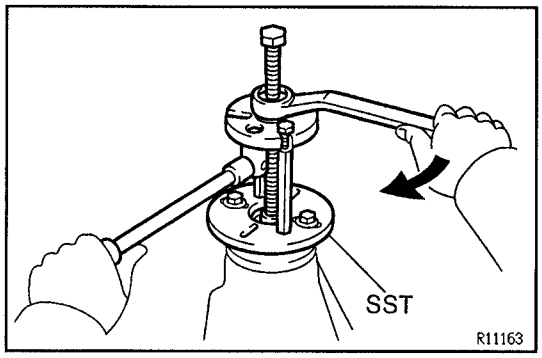

16. INSTALL NEW BEARING SPACER, REAR BEARING AND OIL SLINGER

(a) Install a new bearing spacer and place the rear bearing and oil slinger.

(b) Using SST and the companion flange, install the rear bearing then remove the companion flange.
SST 09950–30010 (09951–03010, 09953–03010, 09954–03010, 09955–03030, 09956–03020)

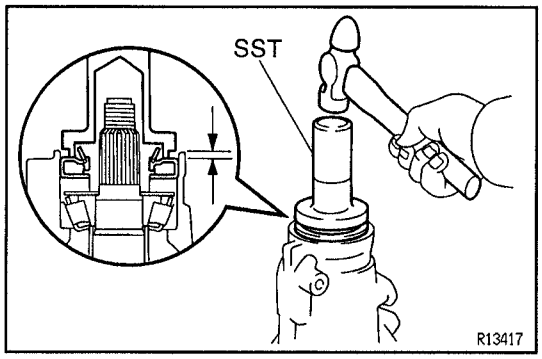

17. INSTALL OIL SEAL

(a) Coat a new oil seal lip with MP grease.

(b) Using SST and a hammer, install the oil seal.
SST 09554–22010
Oil seal drive in depth:
4.5 mm (0.177 in.)

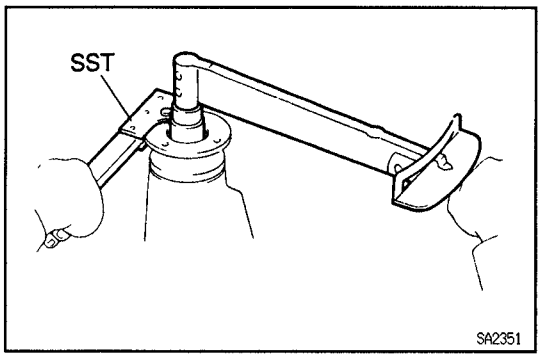

18. INSTALL COMPANION FLANGE

(a) Place the companion flange on the drive pinion.

(b) Coat the threads of a new nut with hypoid gear oil.

(c) Using SST to hold the flange, torque the nut.
SST 09330–00021
Torque: 108 N·m (1,100 kgf·cm, 80 ft·lbf)

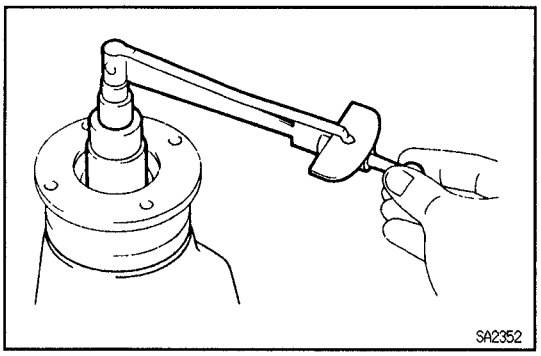

19. ADJUST DRIVE PINION PRELOAD

Using a torque wrench, measure the preload of the backlash between the drive pinion and ring gear.
New bearing preload (at starting):
1.2–1.9 N·m (12–19 kgf·cm, 10.4–16.5 in.·lbf)
Reused bearing preload (at starting):
0.6–1.0 N·m (6–10 kgf·cm, 5.2–8.7 in.·lbf)
If the preload is greater than the specification, replace the bearing spacer.
If the preload is less than the specification, retighten the nut 13 N·m (130 kgf·cm, 9 ft·lbf) a little at a time until the specified preload is reached.
Maximum torque:
223 N·m (2,275 kgf·cm, 165 ft·lbf)
If the maximum torque is exceeded while retightening the nut, replace the bearing spacer and repeat the preload procedure. Do not back off the nut to reduce the preload.

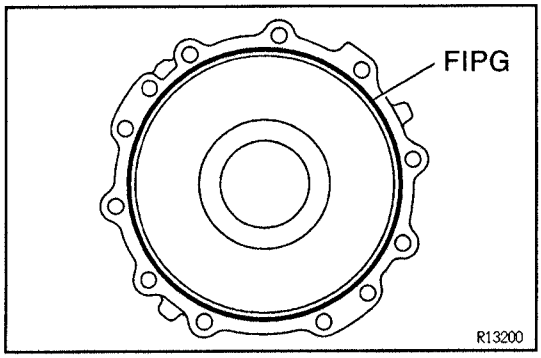

20. INSTALL DIFFERENTIAL CASE

21. INSTALL SIDE BEARING RETAINER

(a) Remove any old FIPG material and be careful not to drop oil on the contact surfaces of the differential carrier and side bearing retainer.

(b) Clean contacting surfaces of any residual FIPG material using gasoline or alcohol.

(c) Apply FIPG to the side bearing retainer, as shown.
FIPG: Part No. 08826–00090, THREE BOND 1281 or equivalent
HINT: Install the side bearing retainer within 10 minutes after applying FIPG.

(d) Install the side bearing retainer with the 10 bolts.
Torque: 69 N·m (700 kgf·cm, 51 ft·lbf)

22. w/ A.D.D. 2–4 selector:
INSTALL OIL TEMP. SENSOR
Torque: 29 N·m (300 kgf·cm, 22 ft·lbf)

23. CHECK TOTAL PRELOAD

24. RECHECK RING GEAR BACKLASH
(See page SA–44)

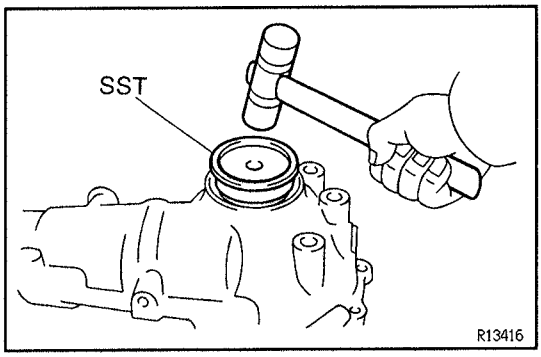

25. RECHECK TEETH CONTACT BETWEEN RING GEAR AND DRIVE PINION
(See page SA–55)

26. CHECK RUNOUT OF COMPANION FLANGE
(See page SA–44)

27. STAKE DRIVE PINION NUT

28. INSTALL SIDE OIL SEAL

(a) Using SST and a hammer, install a new oil seal until its surface is flush with the differential carrier end.
SST 09608–32010

(b) Coat the oil seal lip with MP gease.

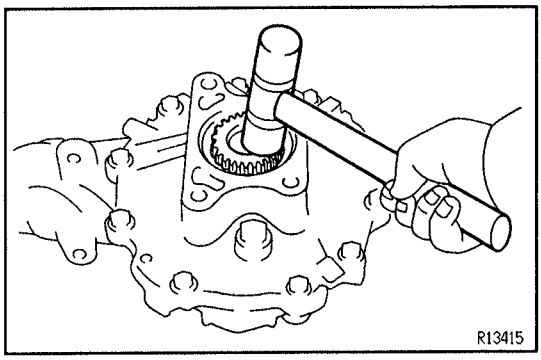

29. w/ A.D.D.:
INSTALL INTERMEDIATE SHAFT

(a) Install a new snap ring to the shaft.

(b) Using a plastic–faced hammer, install the shaft to the differential case.

(c) Check that there is 2–3 mm (0.08–0.12 in.) of play in axial direction.

(d) Check that the intermediate shaft will not come out by trying to pull it completely out by hand.

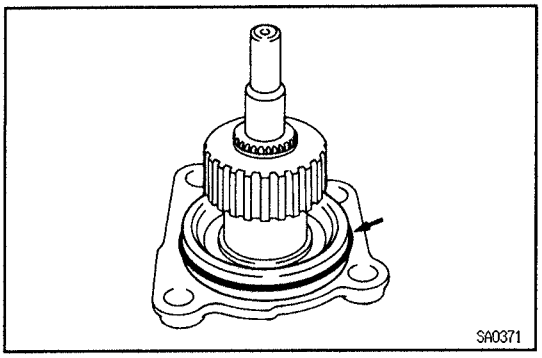

30. w/ A.D.D.:
INSTALL CLUTCH CASE TO DIFFERENTIAL TUBE

(a) Install a new O–ring to the tube.

(b) Coat the O–ring with MP grease.

(c) Install the clutch case to the tube.

(d) Torque the 2 torx bolts.
Torx socket E14 (Part NO.09044–00010 or locally manufactured tool)
Torque: 78 N·m (800 kgf·cm, 58 ft·lbf)

SA

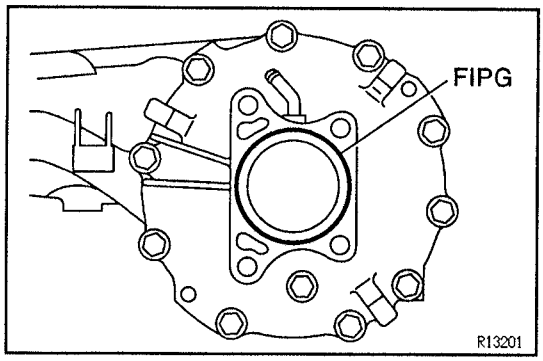

31. w/ A.D.D.:
INSTALL CLUTCH SLEEVE

32. INSTALL DIFFERENTIAL TUBE TO DIFFERENTIAL

(a) Remove any old FIPG material and be careful not to drop oil on the contact surfaces of the differential and clutch case.

(b) Clean contacting surfaces of any residual FIPG material using gasoline or alcohol.

(c) Apply FIPG to the differential, as shown.
FIPG: Part No. 08826–00090, THREE BOND 1281 or equivalent
HINT: Install the differential tube within 10 minutes after applying FIPG.

(d) Install the differential tube to the differential.

(e) w/ A.D.D.:
Torque the 4 torx bolts.
Torx socket E14 (Part NO.09044–00010 or locally manufactured tool)
Torque: 78 N·m (800 kgf·cm, 58 ft·lbf)

(f) w/o A.D.D.:
Torque the 4 bolts.
Torque: 78 N·m (800 kgf·cm, 58 ft·lbf)

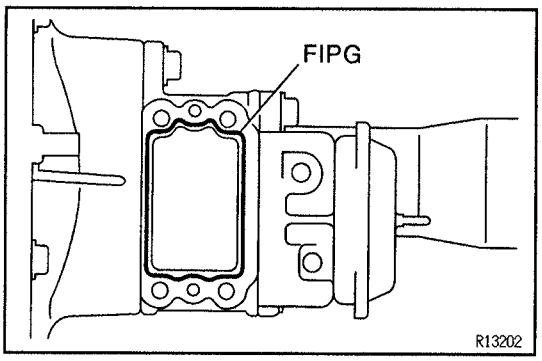

33. w/ A.D.D.:
INSTALL A.D.D. ACTUATOR

(a) Remove any old FIPG material and be careful not to drop oil on the contact surfaces of the actuator and clutch case.

(b) Clean contacting surfaces of any residual FIPG material using gasoline or alcohol.

(c) Apply FIPG to the clutch case, as shown.
FIPG: Part No. 08826–00090, THREE BOND 1281 or equivalent
HINT: Install the actuator within 10 minutes after applying FIPG.

(d) Torque the 4 bolts.
Torque: 21 N·m (210 kgf·cm, 15 ft·lbf)

A.D.D. CONTROL SYSTEM
PARTS LOCATION

SA0KE-09

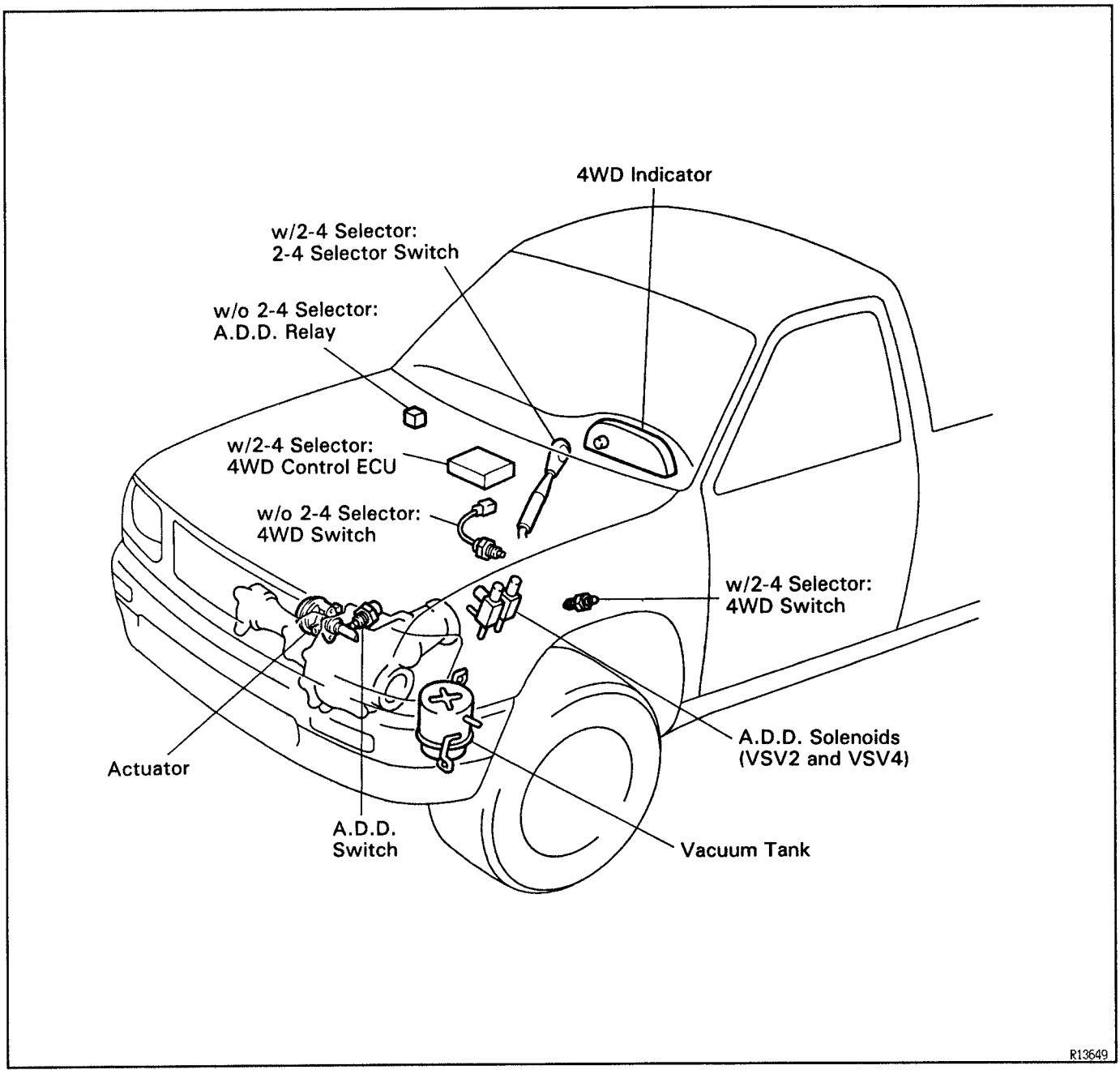

SA

SA0KF-08

WIRING DIAGRAM

w/o 2-4 Selector:

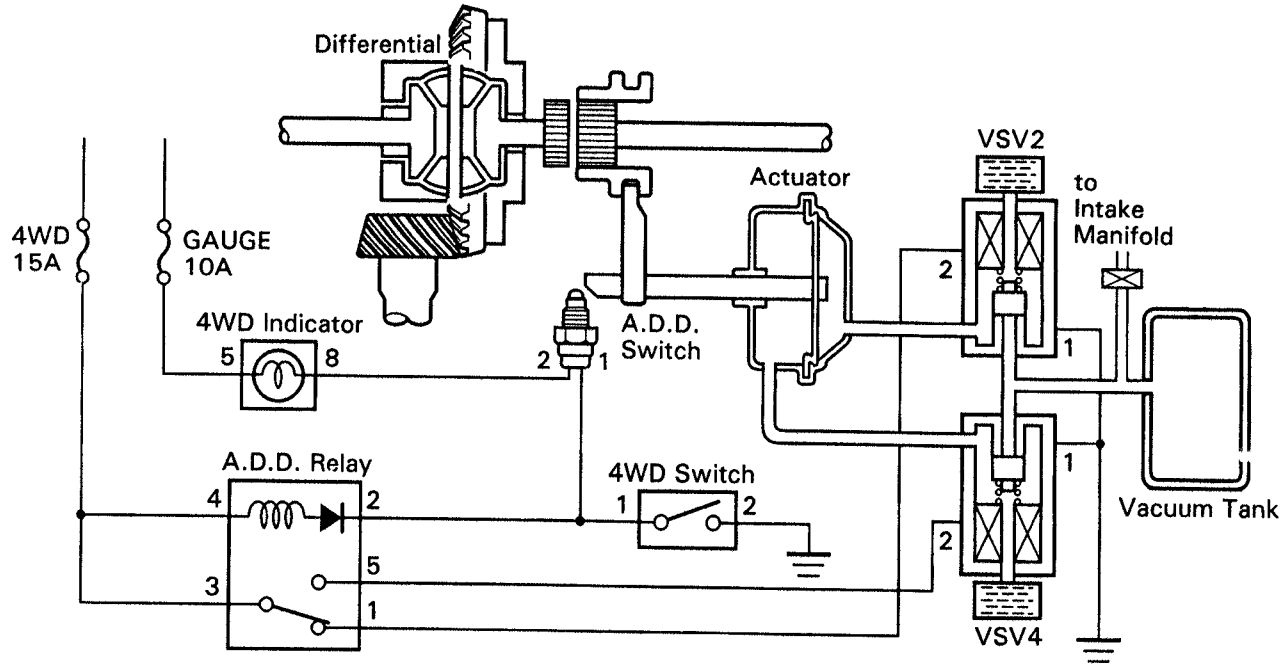

w/2-4 Selector:

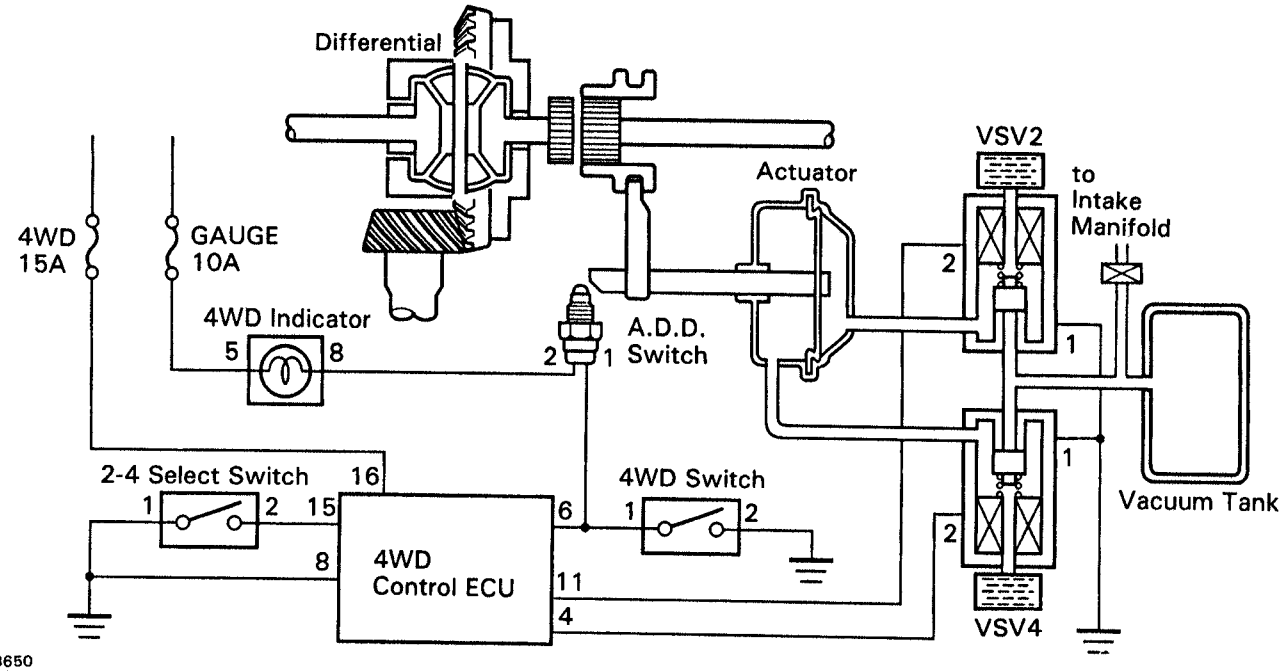

R13650
R13651

Z15335

SA

SA1X0-01

A.D.D. COMPONENTS INSPECTION

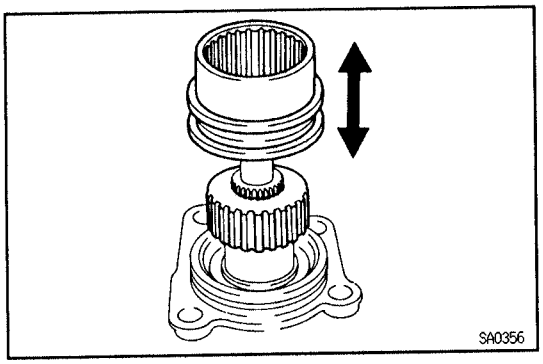

HINT: First judge that the malfunction is found in A.D.D. control system or in 2 – 4 selector system. (See page TR–40)

1. INSPECT CLUTCH HUB AND CLUTCH SLEEVE

(a) Check the wear and damage of the clutch hub and clutch sleeve.
If necessary, replace them.

(b) Check that clutch sleeve slides smoothly on the clutch hub.

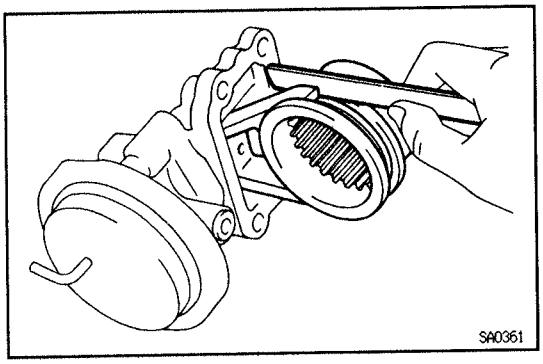

2. MEASURE CLEARANCE OF SLEEVE FORK AND CLUTCH SLEEVE

Using a feeler gauge, measure the clearance between the sleeve fork and clutch sleeve.

Maximum clearance:

0.35 mm (0.0138 in.)

If the clearance exceeds the maximum, replace the fork or sleeve.

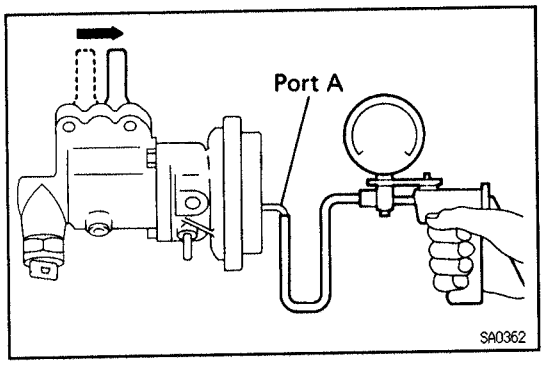

3. INSPECT A.D.D. ACTUATOR

(a) Check that the sleeve fork moves to the actuator side when a vacuum of 66.7 kPa (500 mmHg, 19.69 in.Hg) is applied to port A. Also check that the vacuum remains constant.
If it does not, replace the actuator.

SA

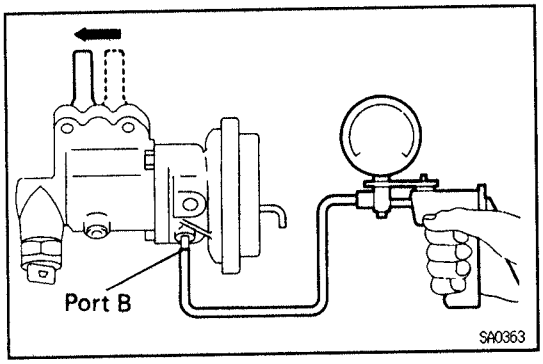

(b) Check that the sleeve fork moves away from the actuator when a vacuum of 66.7 kPa (500 mmHg, 19.69 in.Hg) is applied to port B. Also check that the vacuum remains constant.
If it does not, replace the actuator.

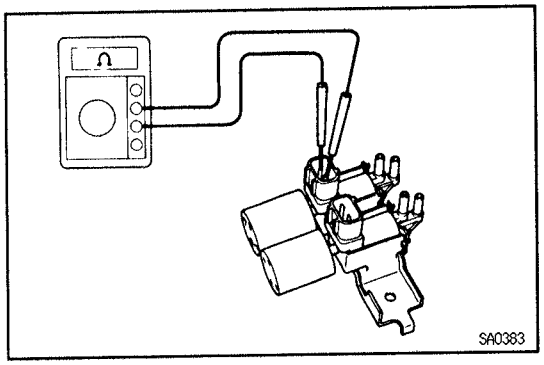

4. INSPECT A.D.D. SOLENOIDS

(a) Measure the resistance of the solenoids.

Resistance:

37–44Ω

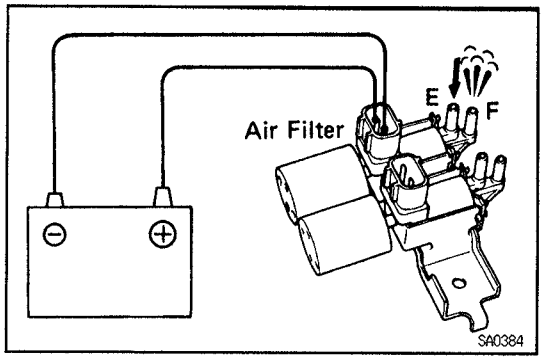

(b) Connect the battery to the solenoid.
Check that air flows from the port E to port F.
Check that air does not flow from the port E to the air filter.

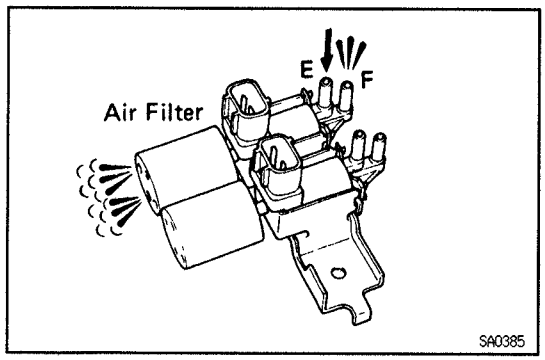

(c) Disconnect the battery voltage from the solenoid.
Check that air flows from the port E to the air filter.
Check that air does not flow from the port E to port F.

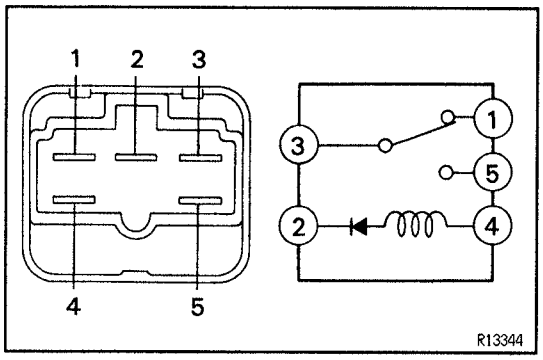

5. INSPECT A.D.D. RELAY
Continuity

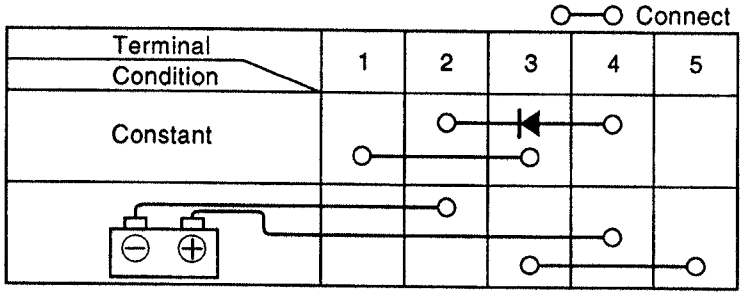

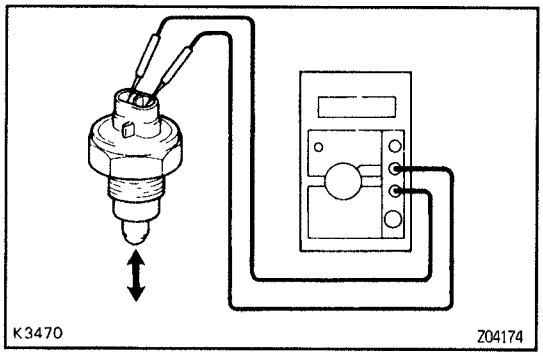

6. INSPECT A.D.D. SWITCH

(a) Using an ohmmeter, check that there is continuity between terminals when the switch is pushed (differential connected position).

(b) Using an ohmmeter, check that there is no continuity when the switch is free (differential disconnected position).

7. INSPECT TRANSFER 4WD SWITCH
(See page TR–20)

SA

FRONT SUSPENSION (2WD)

PREPARATION

SA06W–05

SST (SPECIAL SERVICE TOOLS)

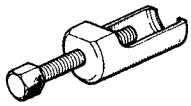	09610–20012 Pitman Arm Puller	Tie rod end
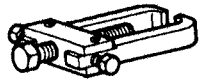	09628–62011 Ball Joint Puller	Steering knuckle removal
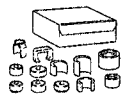	09710–30021 Suspension Bushing Tool Set	Upper and lower suspension arm bushing replacement
	(09710–03031) Bushing Remover	
	(09710–03071) Remover	
	(09710–03101) Bushing Replacer	
	(09710–03141) Bushing Remover Base	
	09727–22011 Front Spring Compressor	Coil spring removal and installation

SA06X–09

RECOMMENDED TOOLS

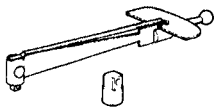	09025–00010 Torque Wrench (30 kgf·cm) .	

SA06Y–02

EQUIPMENT

Torque wrench	

FRONT SHOCK ABSORBER

SA27R-01

COMPONENTS

(See page SA–69)

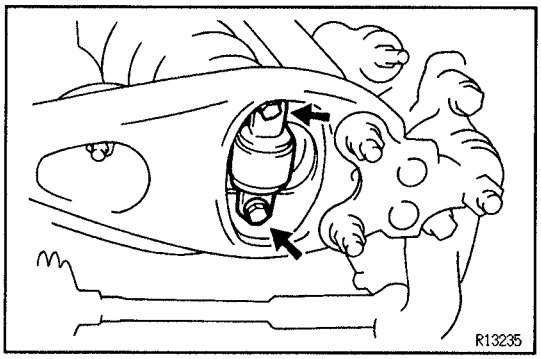

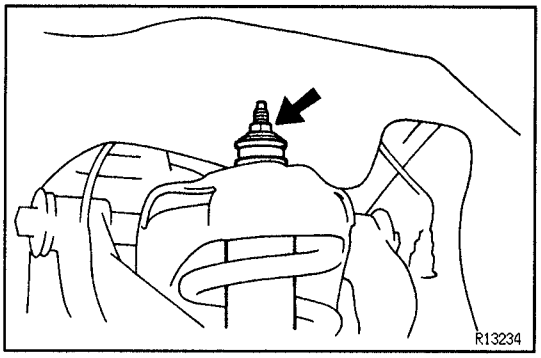

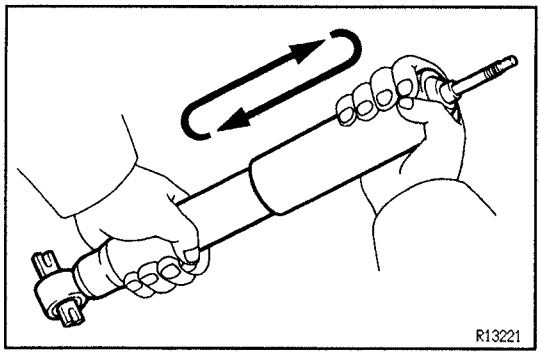

FRONT SHOCK ABSORBER REMOVAL

SA070-09

1. **REMOVE FRONT WHEEL**
   Torque: 110 N·m (1,150 kgf·cm, 83 ft·lbf)
2. **REMOVE SHOCK ABSORBER**

(a) Remove the 2 bolts and disconnect the shock absorber from the lower suspension arm.
Torque: 39 N·m (400 kgf·cm, 29 ft·lbf)

(b) Hold the shock absorber rod, then remove the nut, retainer, cushion and shock absorber.
Torque: 25 N·m (250 kgf·cm, 18 ft·lbf)

(c) Remove the cushion and retainer from the shock absorber.

SA

FRONT SHOCK ABSORBER INSPECTION

SA071-02

INSPECT SHOCK ABSORBER

Compress and extend the shock absorber rod and check that there is no abnormal resistance or unusual operation sounds.

If there is any abnormality, replace the shock absorber with a new one.

FRONT SHOCK ABSORBER INSTALLATION

SA278-01

Installation is in the reverse order of removal.

UPPER SUSPENSION ARM
COMPONENTS

SA074-09

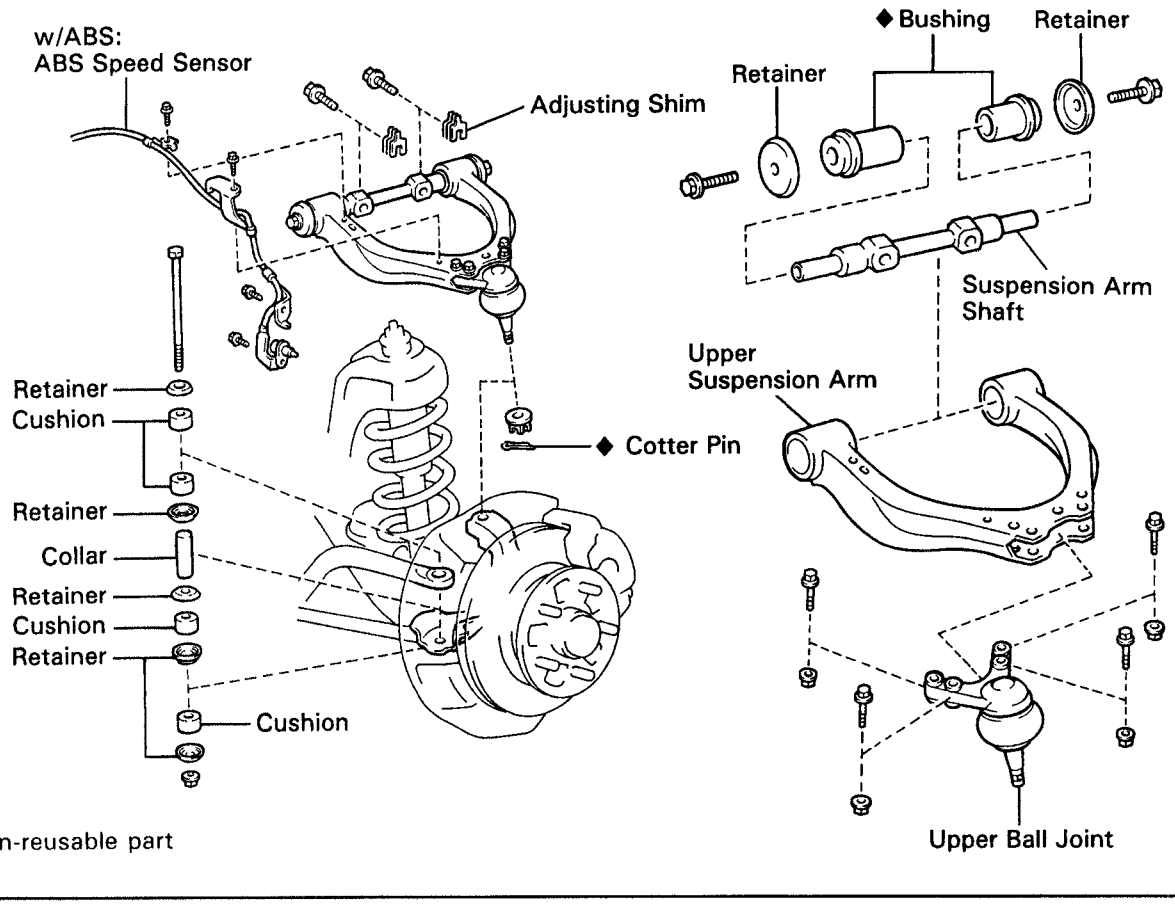

SA

SA1WS-02

UPPER SUSPENSION ARM REMOVAL

1. **REMOVE FRONT WHEEL**
   Torque: 110 N·m (1,150 kgf·cm, 83 ft·lbf)
2. **w/ABS:**
   REMOVE ABS SPEED SENSOR AND WIRE HARNESS CLAMP
   Torque: 8 N·m (82 kgf·cm, 71 in.·lbf)
3. **REMOVE STABILIZER BAR LINK**
   (See page SA–73)
4. **DISCONNECT STEERING KNUCKLE FROM UPPER BALL JOINT**
   (See page SA–14)

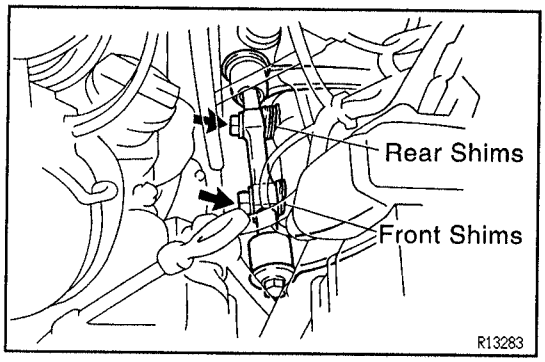

5. REMOVE UPPER SUSPENSION ARM

(a) Loosen the 2 bolts and remove the front and rear alignment adjusting shims.
Torque: 130 N·m (1,300 kgf·cm, 94 ft·lbf)
REMOVAL HINT: Make a note of the number and thickness of the front and rear shims.

(b) Remove the 2 bolts and upper suspension arm.

6. REMOVE UPPER BALL JOINT

Remove the 4 bolts, nuts and upper ball joint from the upper suspension arm.
Torque: 39 N·m (400 kgf·cm, 29 ft·lbf)

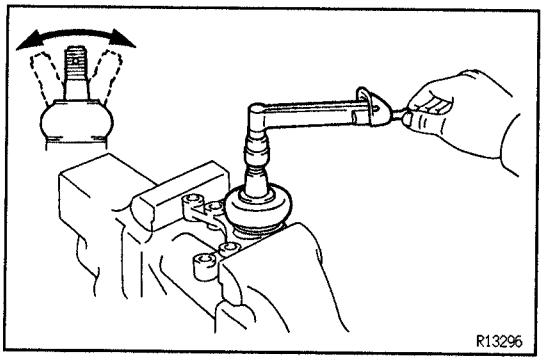

UPPER BALL JOINT INSPECTION

SA1WT-01

INSPECT BALL JOINT FOR ROTATION CONDITION

(a) Flip the ball joint stud back and forth 5 times before installing the nut.

(b) Using a torque wrench, turn the nut continuously one turn every 2–4 seconds and take the torque reading on the 5th turn.
Torque (turning):
0.5–3.5 N·m (5–35 kgf·cm, 4–30 in.·lbf)

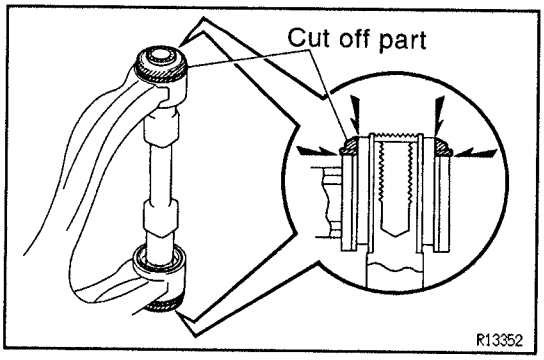

UPPER SUSPENSION ARM SHAFT AND BUSHING REPLACEMENT

SA078-03

1. REMOVE LOCK BOLTS

Remove the 2 bolts and retainers from the arm shaft.

2. REMOVE BUSHINGS

(a) Cut off the shaded portions shown in the illustration to expose the edje of the tubes.
NOTICE: Be careful not to damage the edje of arm tubes.

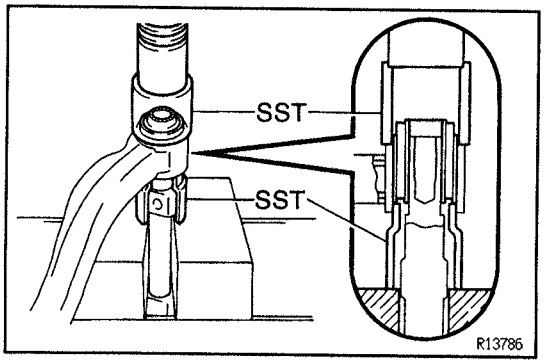

(b) Using SST and a press, press down the suspension arm tube until it touches SST.
SST 09710–30021 (09710–03031, 09710–03141)
NOTICE: Do not press the tube excessively.

SA

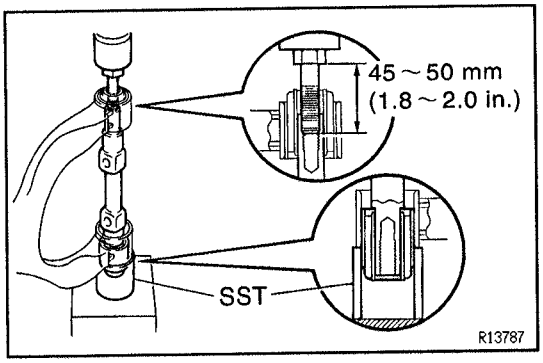

(c) Temporarily install a bolt to the arm shaft on the other side.
Bolt length:
45 – 50 mm (1.8 – 2.0 in.)

(d) Using SST and a press, remove the bushing and arm shaft.
SST 09710–30021 (09710–03141)

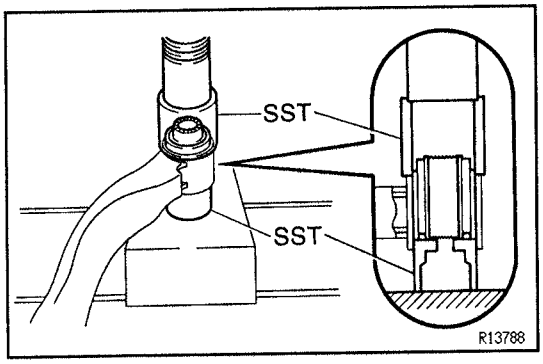

(e) Using SST and a press, remove the other bushing.
SST 09710–30021 (09710–03071, 09710–03141)

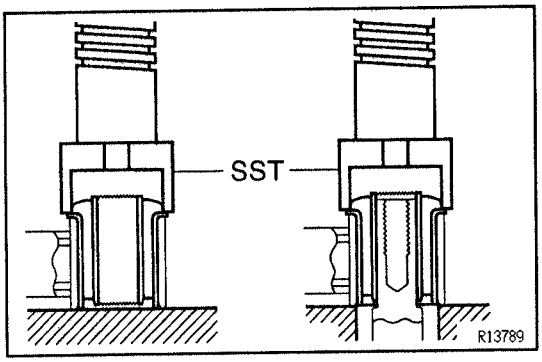

3. INSTALL NEW BUSHINGS

(a) Using SST and a press, install a new bushing.
SST 09710–30021 (09710–03101)

(b) Place the arm shaft to the bushing.

(c) Using SST and a press, install a new other bushing.
SST 09710–30021 (09710–03101)
HINT: Pass the arm shaft through the bushing.

(d) Check that the arm shaft turns easily, and check that there is no axial play in the arm shaft.

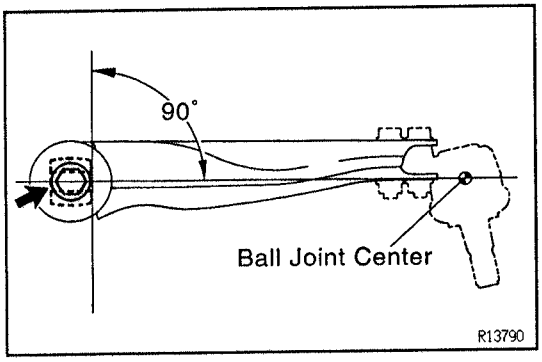

4. INSTALL LOCK BOLTS

Position the arm shaft so that the frame installation surface is at 90° to the suspension arm as shown, and torque the lock bolts.
Torque: 125 N·m (1,255 kgf·cm, 91 ft·lbf)

UPPER SUSPENSION ARM INSTALLATION SA27T–01

Installation is in the reverse order of removal.
HINT: After installation, check ABS speed sensor signal and front wheel alignment.
(See page BR–51 and SA–2)

LOWER SUSPENSION ARM AND COIL SPRING
COMPONENTS

SA078–03

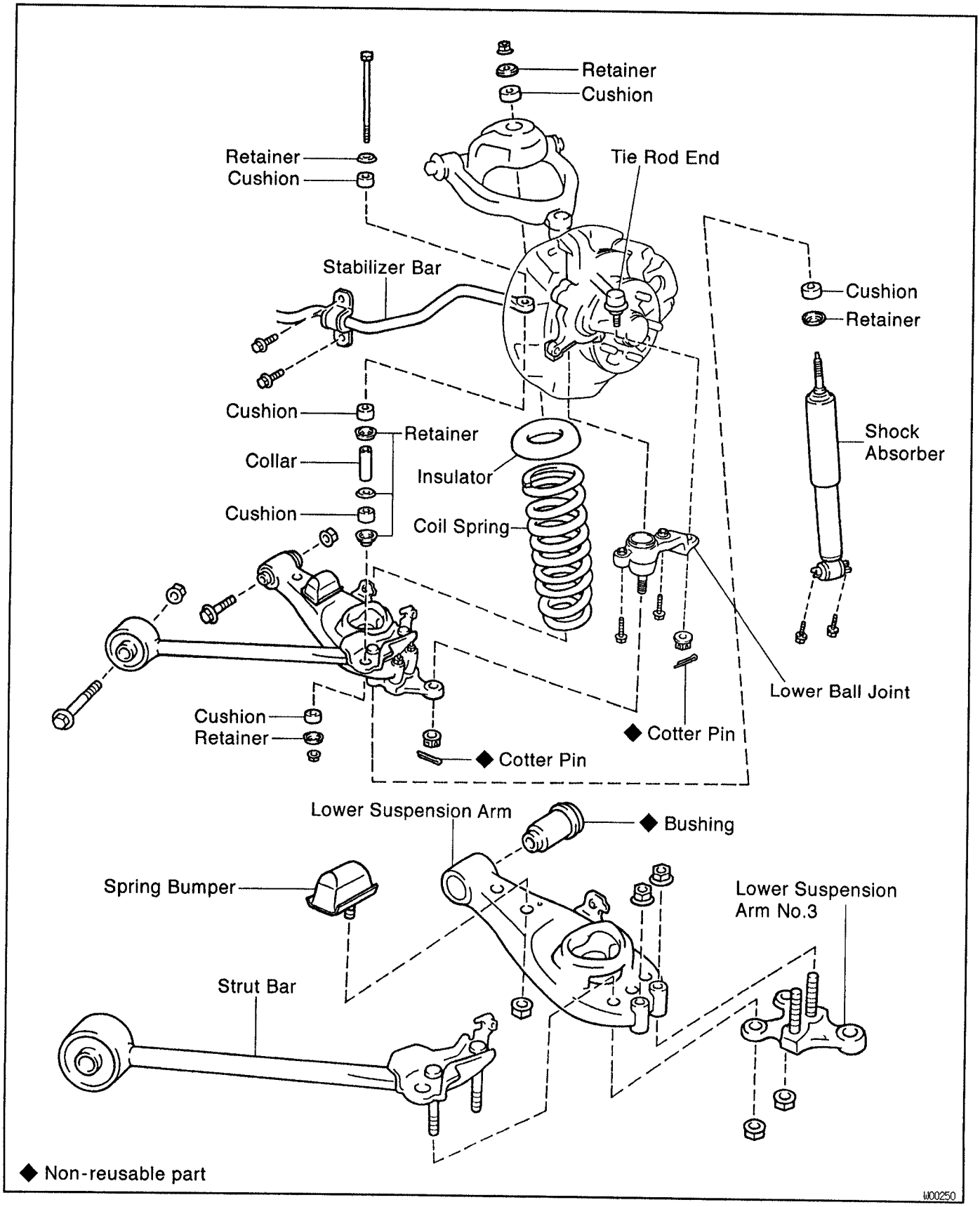

SA

SA27U-01

LOWER SUSPENSION ARM AND COIL SPRING REMOVAL

1. **REMOVE FRONT WHEEL**
   Torque: 110 N·m (1,150 kgf·cm, 83 ft·lbf)
2. **REMOVE SHOCK ABSORBER**
   (See page SA–65)

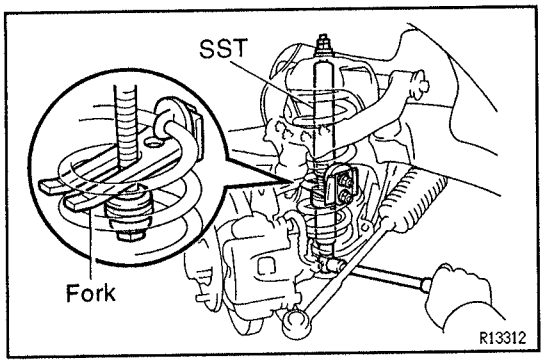

3. **COMPRESS COIL SPRING**
   Using SST, compress the coil spring.
   SST 09727–22011 (09727–23010, 09727–23020, 09727–23030, 09727–23040)
   HINT: When setting the fork, insert it to the center area of the coil spring and lower it by turning it along the coil spring.

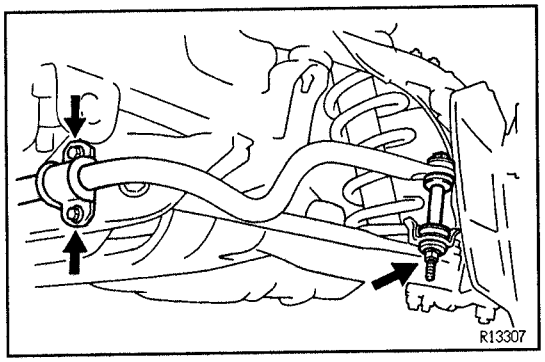

4. **DISCONNECT STABILIZER BAR**
   (a) Remove the nut and stabilizer bar link from the lower suspension arm.
   Torque: 39 N·m (400 kgf·cm, 29 ft·lbf)
   (b) Remove the 2 stabilizer bar bracket set bolts.
   Torque: 29 N·m (300 kgf·cm, 22 ft·lbf)

SA

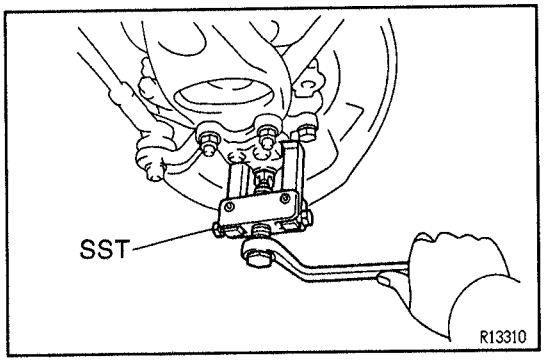

5. **REMOVE LOWER SUSPENSION ARM AND STRUT BAR**
   (a) Support the upper suspension arm and steering knuckle securely.
   (b) Remove the cotter pin and nut.
   Torque: 110 N·m (1,100 kgf·cm, 80 ft·lbf)
   (c) Using SST, disconnect the lower ball joint from the lower suspension arm.
   SST 09628–62011
   NOTICE: Be careful not to damage the lower ball joint boot.

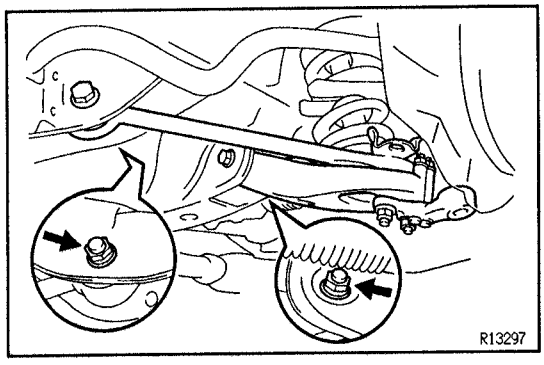

   (d) Loosen the lower suspension arm set bolt and remove the nut.
   Torque: 200 N·m (2,050 kgf·cm, 148 ft·lbf)
   INSTALLATION HINT: After stabilizing the suspension, torque the bolt.
   (e) Loosen the strut bar front set bolt and remove the nut.
   Torque: 300 N·m (3,050 kgf·cm, 221 ft·lbf)
   INSTALLATION HINT: After stabilizing the suspension, torque the bolt.

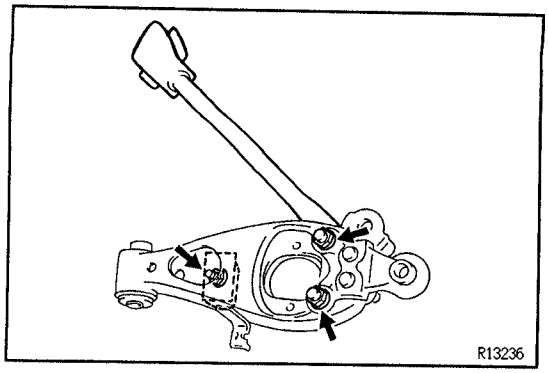

(f) Pull out the 2 bolts and remove the lower suspension arm and strut bar.

6. **REMOVE SST AND COIL SPRING**
INSTALLATION HINT: Place the end of the coil spring and lower suspension arm seat in contact.

7. **REMOVE STRUT BAR AND SPRING BUMPER**
(a) Remove 2 nuts and strut bar from the lower suspension arm.
Torque: 150 N·m (1,530 kgf·cm, 111 ft·lbf)
(b) Remove the nut and spring bumper.
Torque: 43 N·m (440 kgf·cm, 32 ft·lbf)

8. **REMOVE LOWER SUSPENSION ARM NO.3**
Remove the 2 nuts and lower suspension arm No.3.
Torque: 150 N·m (1,530 kgf·cm, 111 ft·lbf)

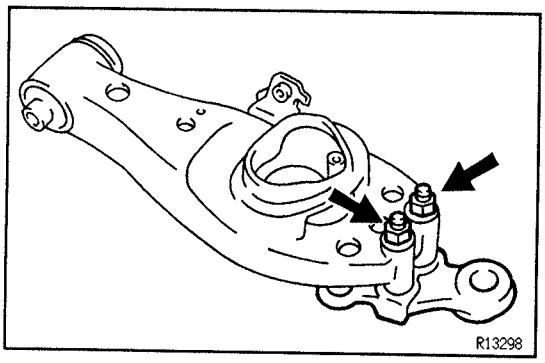

LOWER SUSPENSION ARM BUSHING REPLACEMENT

SA1WV–02

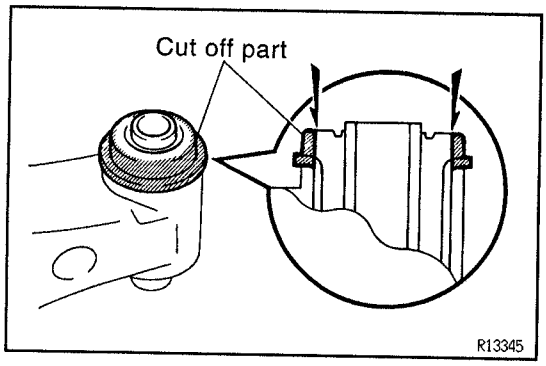

1. **REMOVE LOWER SUSPENSION ARM BUSHING**
(a) Cut off the shaded portion shown in the illustration to expose the edge of the tube.
NOTICE: Be careful not to damage the edge of the arm tube.

SA

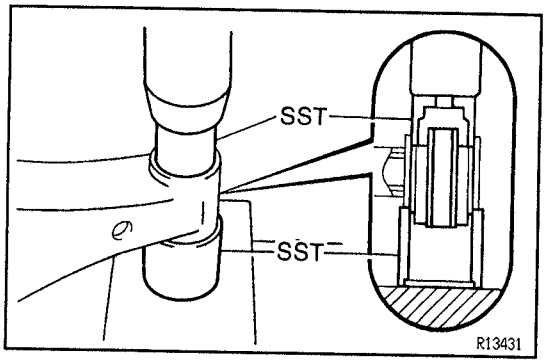

(b) Face the cut side downward and using SST and a press, remove the bushing.
SST 09710–30021 (09710–03071, 09710–03141)

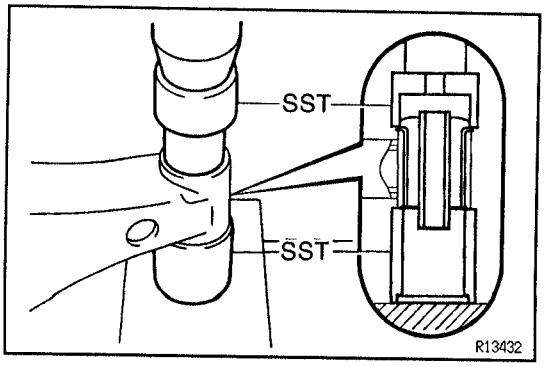

2. **INSTALL LOWER SUSPENSION ARM BUSHING**
Using SST and a press, install a new bushing.
SST 09710–30021 (09710–03101, 09710–03141)
NOTICE: Press in the bushing from the rear side.

SA27V-01

LOWER SUSPENSION ARM AND COIL SPRING INSTALLATION

Installation is in the reverse order of removal.
HINT: After installation, check front wheel alignment.
(See page SA−2)

LOWER BALL JOINT

SA27W-01

COMPONENTS

(See page SA−69)

SA07H-03

LOWER BALL JOINT REMOVAL

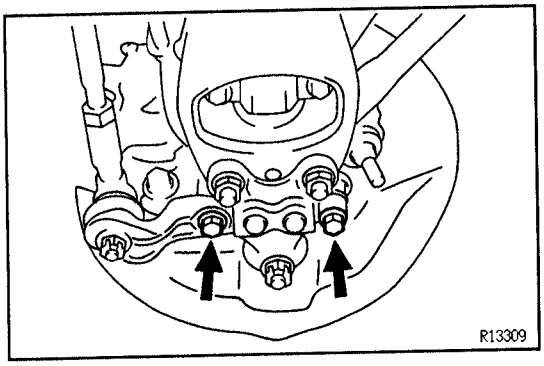

1. **REMOVE FRONT WHEEL**
   Torque: 110 N·m (1,150 kgf·cm, 83 ft·lbf)
2. **SUPPORT LOWER SUSPENSION ARM WITH JACK**
3. **DISCONNECT TIE ROD END**

(a) Loosen the 2 lower ball joint set bolts.
Torque: 160 N·m (1,600 kgf·cm, 116 ft·lbf)
REMOVAL HINT: Do not remove the bolts.

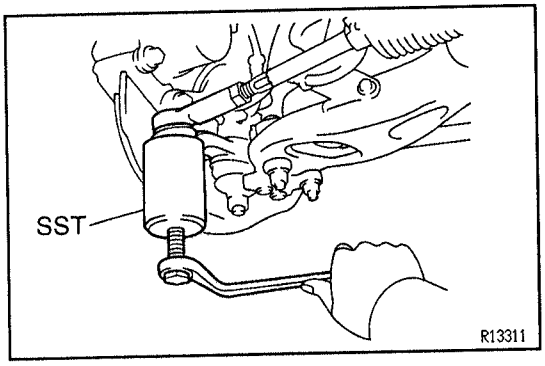

(b) Remove the cotter pin and nut.
Torque: 72 N·m (730 kgf·cm, 53 ft·lbf)

(c) Using SST, disconnect the tie rod end.
SST 09628−62011

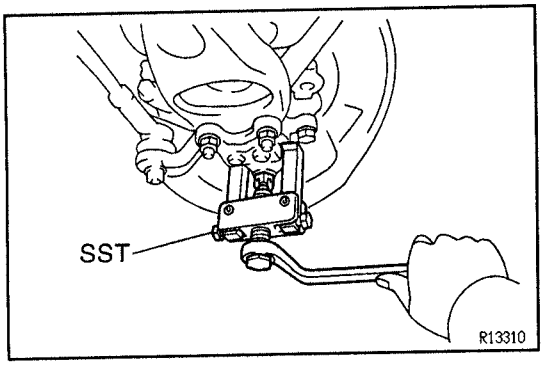

4. **REMOVE LOWER BALL JOINT**

(a) Remove the cotter pin and loosen the nut.
Torque: 110 N·m (1,100 kgf·cm, 80 ft·lbf)

(b) Using SST, disconnect the lower ball joint.
SST 09628−62011

(c) Remove the nut, 2 bolts and lower ball joint.

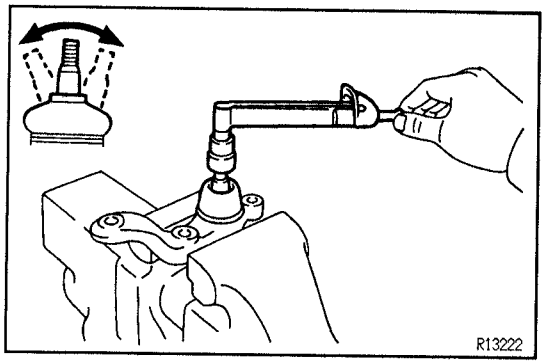

LOWER BALL JOINT INSPECTION

SA07J–0F

INSPECT BALL JOINT FOR ROTATION CONDITION

(a) Flip the ball joint stud back and forth 5 times before installing the nut.

(b) Using a torque wrench, turn the nut continuously one turn every 2–4 seconds and take the torque reading on the 5th turn.

Torque (turning):

0.5–3.5 N·m (5–35 kgf·cm, 4–30 in.·lbf)

LOWER BALL JOINT INSTALLATION

SA27X–01

Installation is in the reverse order of removal.

STABILIZER BAR
COMPONENTS

SA07Q–02

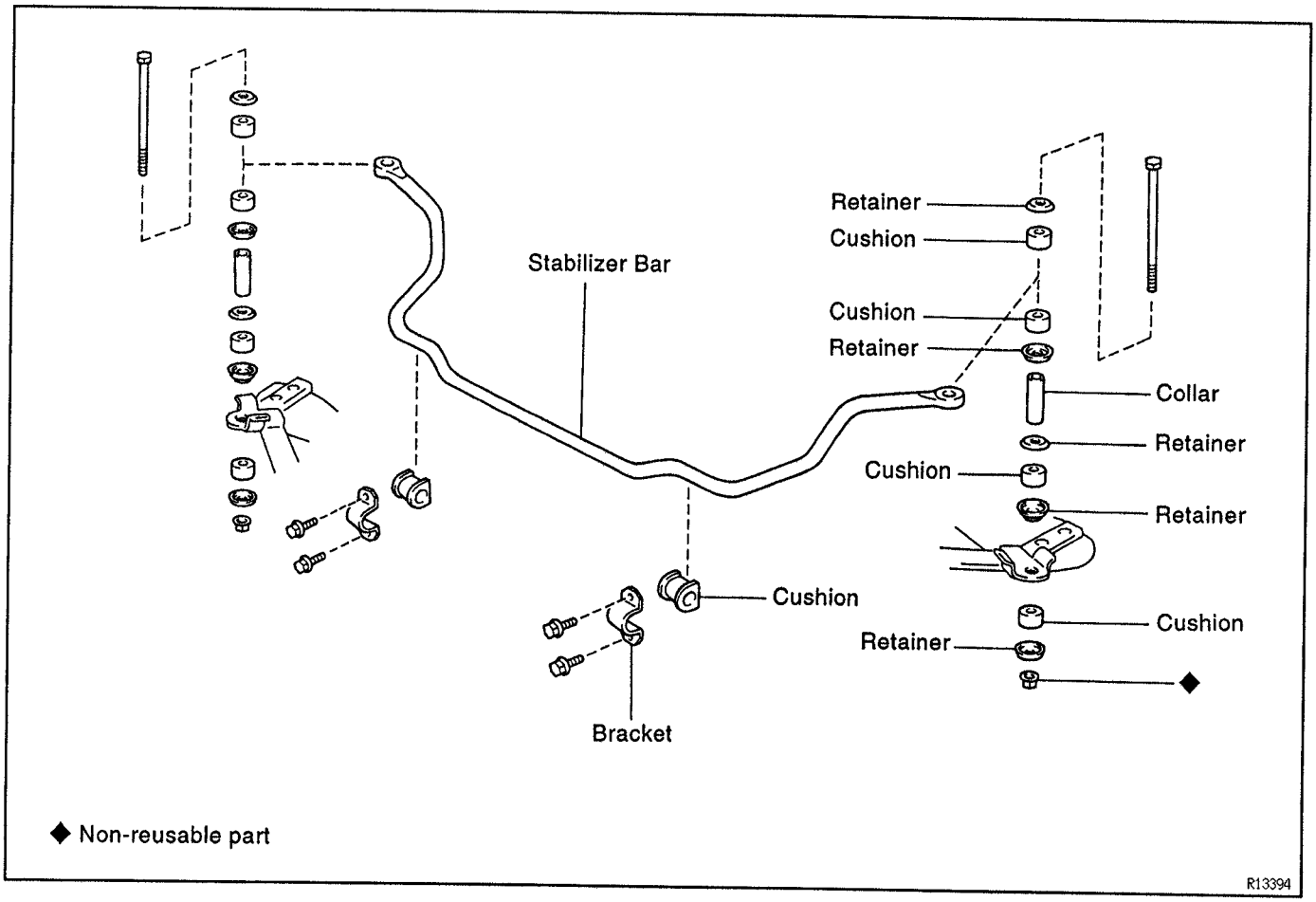

SA

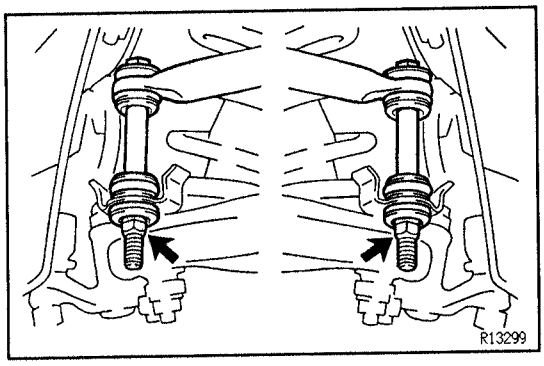

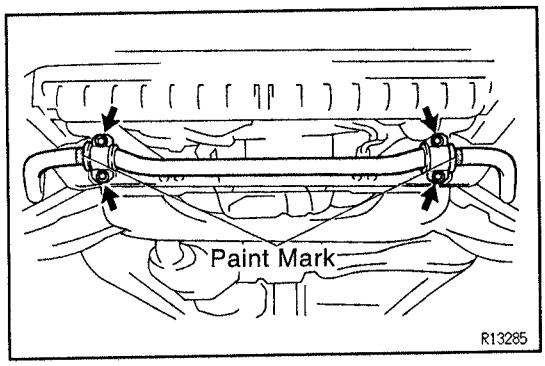

SA1WZ-02

STABILIZER BAR REMOVAL

1. **REMOVE FRONT WHEELS**
   Torque: 110 N·m (1,150 kgf·cm, 83 ft·lbf)
2. **REMOVE STABILIZER BAR**

(a) Hold the bolt with a wrench, then remove the nut, retainer, collar and cushion from the lower suspension arm.
Torque: 39 N·m (400 kgf·cm, 29 ft·lbf)

(b) Remove the 4 bolts and stabilizer bar with the cushions and brackets.
Torque: 29 N·m (300 kgf·cm, 22 ft·lbf)

(c) Remove the brackets and cushions from the stabilizer bar.
INSTALLATION HINT: Install the cushions to the inside of the paint mark.

SA27Y-01

STABILIZER BAR INSTALLATION

Installation is in the reverse order of removal.

SA

FRONT SUSPENSION (4WD)

PREPARATION

SST (SPECIAL SERVICE TOOLS)

SA02Q-14

	09309-37010	Transmission Bearing Replacer	Upper ball joint installation
	09506-35010	Differential Drive Pinion Rear Bearing Replacer	Shock absorber bushing replacement
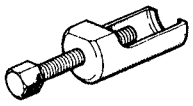	09610-20012	Pitman Arm Puller	Tie rod end removal
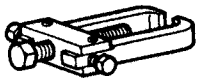	09628-62011	Ball Joint Puller	Lower ball joint removal
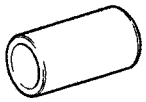	09632-36010	Steering Vane Pump Bearing Replacer	Shock absorber bushing replacement
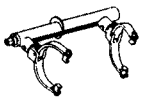	09727-30030	Coil Spring Compressor	Coil spring removal and insparation
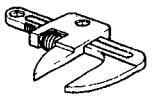	09922-10010	Variable Open Wrench	No. 1 and No. 2 spring bumper removal and installation
	09950-40010	Puller B Set	Upper ball joint disconnection Upper ball joint removal
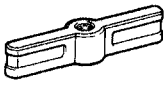	(09951-04010)	Hanger 150	
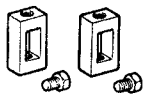	(09952-04010)	Slide Arm	
	(09953-04020)	Center Bolt 150	
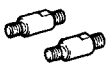	(09954-04010)	Arm 25	

SA

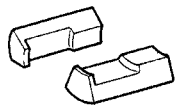	(09955–04030) Claw No.3	
	(09957–04010) Attachment	Upper ball joint removal
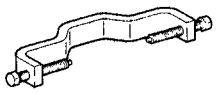	(09958–04010) Holder	

SA08X–08

RECOMMENDED TOOLS

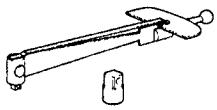	09025–00010 Torque Wrench (30 kgf·cm) .	
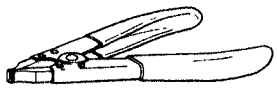	09905–00012 Snap Ring No.1 Expander .	

SA02S–0R

EQUIPMENT

Torque wrench	

SA

FRONT SHOCK ABSORBER
COMPONENTS

SAONJ–06

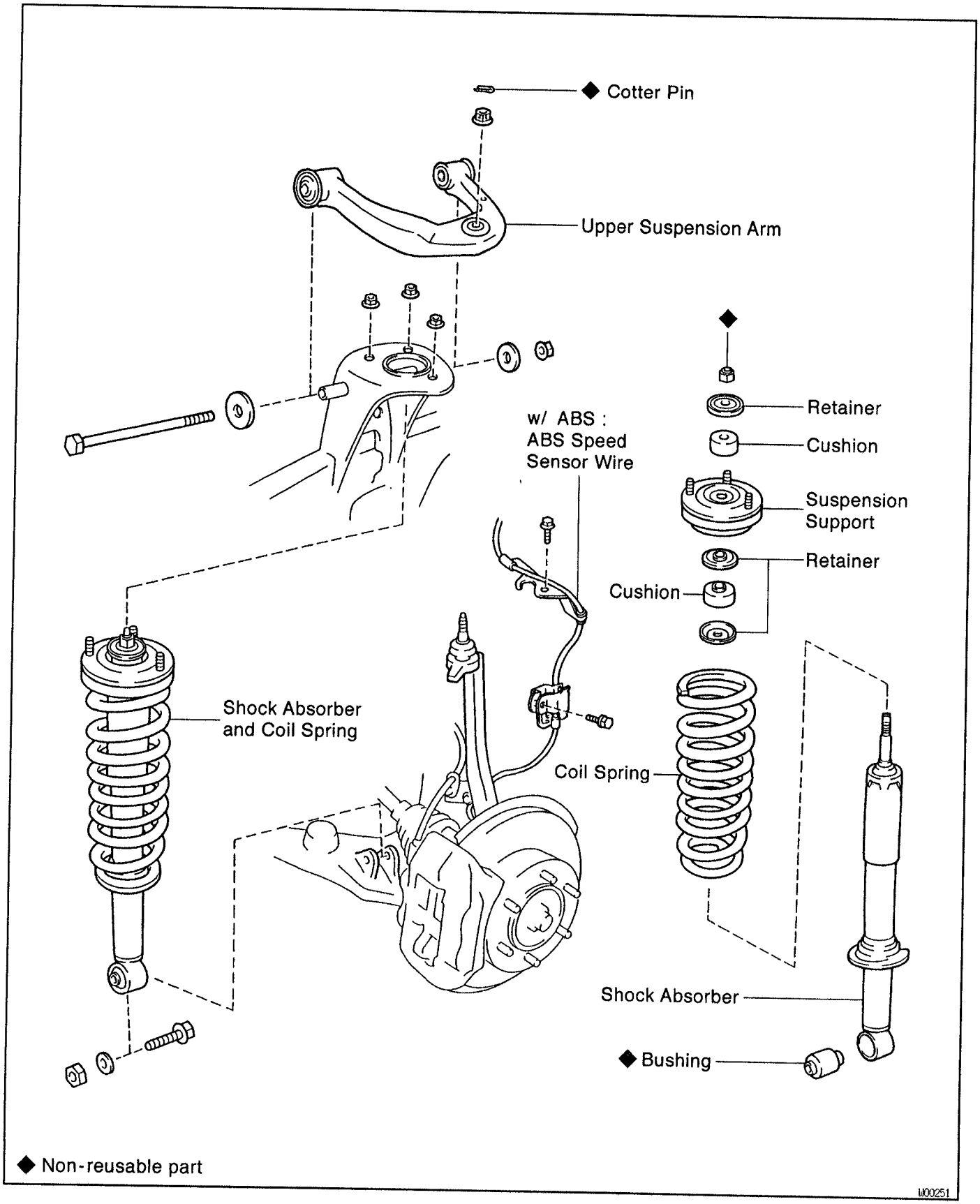

SA

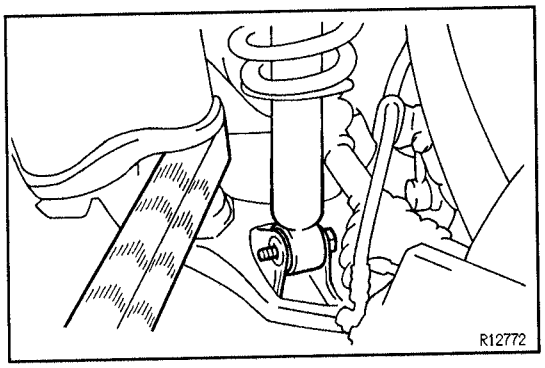

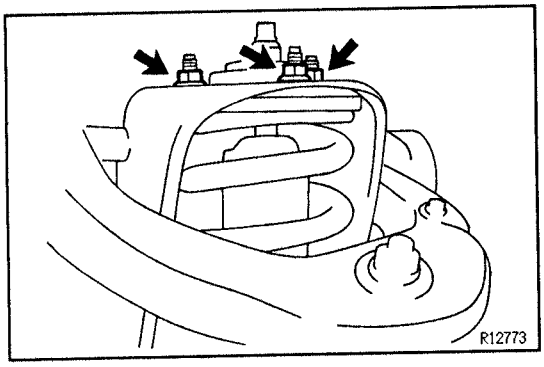

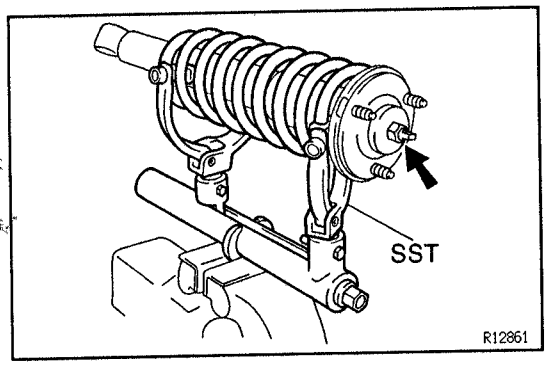

FRONT SHOCK ABSORBER REMOVAL

SA1WB-02

1. **REMOVE FRONT WHEEL**
   Torque: 110 N·m (1,150 kgf·cm, 83 ft·lbf)
2. **DISCONNECT SHOCK ABSORBER FROM LOWER SUSPENSION ARM**

(a) Loosen the bolt and remove the shock absorber lower nut.
Torque: 135 N·m (1,400 kgf·cm, 101 ft·lbf)
INSTALLATION HINT: After stabilizing the suspension, torque the bolt.

(b) While lowering the lower suspension arm, remove the bolt and disconnect the shock absorber.

3. **REMOVE SHOCK ABSORBER AND COIL SPRING**
Remove the 3 nuts and shock absorber and coil spring.
Torque: 64 N·m (650 kgf·cm, 47 ft·lbf)

FRONT SHOCK ABSORBER DISASSEMBLY

SA19P-02

1. **REMOVE SUSPENSION SUPPORT AND COIL SPRING**

(a) Using SST, compress the coil spring until there is a clearance on both ends.
SST 09727–30030
NOTICE:
To avoid damage to SST:
- **Set SST arms to allow clearance to hold a 8–roll coil between them.**
- **Do not compress the coil spring more than neses-sary.**
- **Do not use an impact wrench.**

(b) Remove suspension support center nut.

(c) Remove the suspension support and coil spring.

2. **REMOVE INSULATOR FROM SUSPENSION SUPPORT**

SA

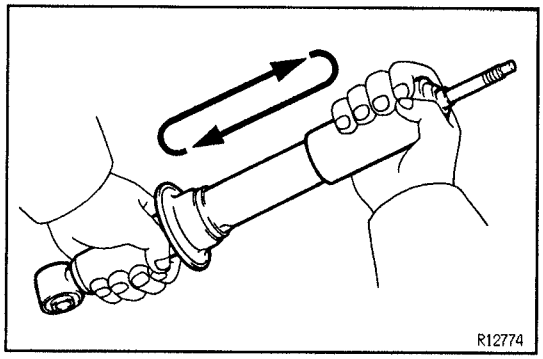

FRONT SHOCK ABSORBER INSPECTION

SA0NL-04

INSPECT SHOCK ABSORBER

Compress and extend the shock absorber rod and check that there is no abnormal resistance or unusual operation sounds.

If there is any abnormality, replace the shock absorber with a new one.

NOTICE: When discarding the shock absorber, use the following procedure.

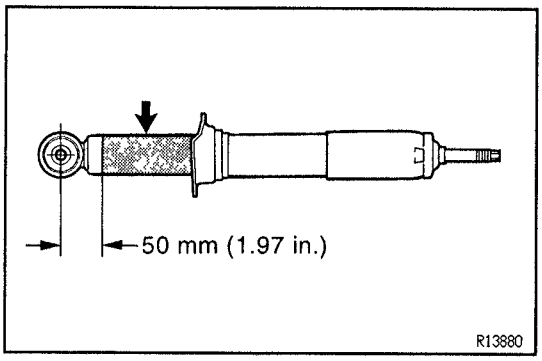

FRONT SHOCK ABSORBER DISPOSAL

SA0NM-03

1. **FULLY EXTEND SHOCK ABSORBER ROD**
2. **DRILL HOLE TO REMOVE GAS FROM CYLINDER**

Using a drill, make a hole in the cylinder as shown to remove the gas inside.

CAUTION: The gas coming out is harmless, but be careful of chips which may fly up when drilling.

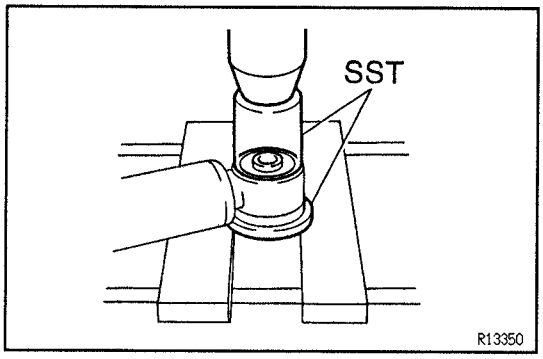

SHOCK ABSORBER BUSHING REPLACEMENT

SA1Q6-02

1. **REMOVE BUSHING**

Using SST and a press, remove the bushing.

SST 09506–35010, 09632–36010

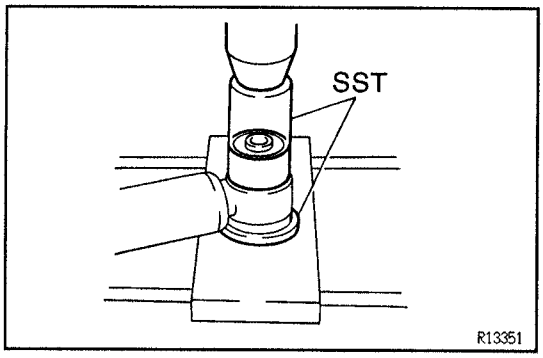

2. **INSTALL NEW BUSHING**

Using SST and a press, install a new bushing.

SST 09506–35010, 09632–36010

HINT: Do not apply grease or oil to the bushing.

SA

FRONT SHOCK ABSORBER ASSEMBLY

SA190-02

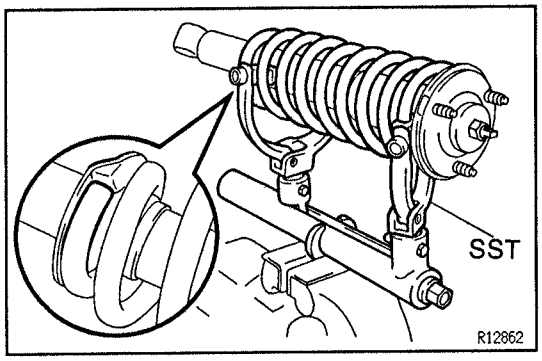

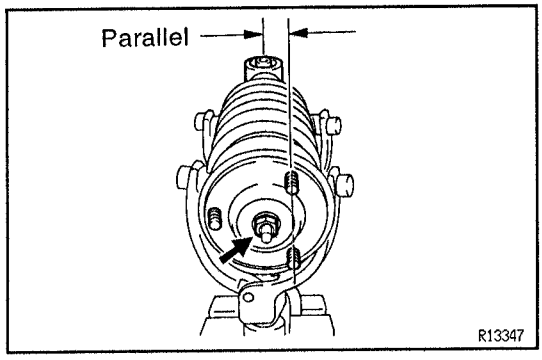

1. INSTALL INSULATOR TO SUSPENSION SUPPORT

HINT: Match the bolt of the suspension support with the cut–out part of the insulator.

2. INSTALL COIL SPRING TO SHOCK ABSORBER

(a) Using SST, compress the coil spring.
SST 09727–30030
NOTICE:
To avoid damage to SST:
- **Set SST arms to allow clearance to hold a 8–roll coil between them.**
- **Do not compress the coil spring more than necessary.**
- **Do not use an impact wrench.**

(b) Install the coil spring to the shock absorber.
HINT: Fit the lower end of the coil spring into the gap of the spring seat of the shock absorber.

3. INSTALL SUSPENSION SUPPORT

(a) Install the suspension support to the rod.

(b) Temporarily tighten a new suspension support center nut.

(c) Position the suspension support so that a line drawn between the 2 bolts would be parallel to the direction of the lower bushing.

(d) Remove the SST.
HINT: After removing the SST, again check the direction of the suspension support.

(e) Torque the suspension center nut.
Torque: 29 N·m (300 kgf·cm, 22 ft·lbf)

SA

FRONT SHOCK ABSORBER INSTALLATION

SA27Z-01

Installation is in the reverse order of removal.

UPPER SUSPENSION ARM
COMPONENTS
SA280-01

(See page SA–77)

UPPER SUSPENSION ARM REMOVAL
SA1WD-02

1. **REMOVE SHOCK ABSORBER AND COIL SPRING**
   (See page SA–77)
2. **w/ABS:**
   DISCONNECT ABS SPEED SENSOR WIRE HARNESS CRAMP
   Torque: 8 N·m (82 kgf·cm, 71 in.·lbf)

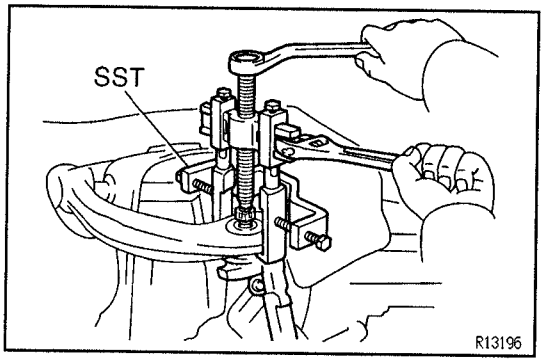

3. **DISCONNECT UPPER BALL JOINT**
   (a) Remove the cotter pin and loosen the nut.
   Torque: 105 N·m (1,100 kgf·cm, 80 ft·lbf)
   (b) Using SST, disconnect the upper ball joint.
   SST 09950–40010 (09951–04010, 09952–04010, 09953–04020, 09954–04010, 09955–04030, 09958–04010)
   (c) Support the steering knuckle securely.
   (d) Remove the nut.

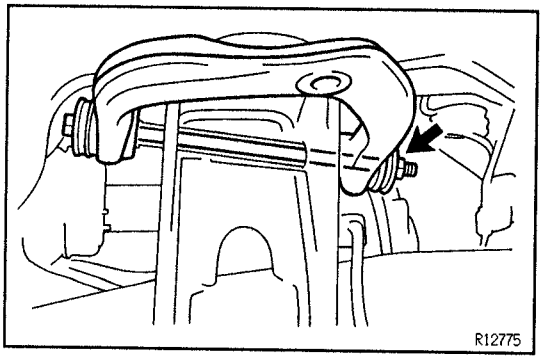

4. **REMOVE UPPER SUSPENSION ARM**
   Remove the nut, bolt and upper suspension arm.
   Torque: 115 N·m (1,200 kgf·cm, 87 ft·lbf)
   INSTALLATION HINT: After stabilizing the suspension, torque the nut.

UPPER SUSPENSION ARM INSTALLATION
SA281-01

Installation is in the reverse order of removal.
HINT: After installation, check front wheel alignment.
(See page SA–8)

LOWER SUSPENSION ARM
COMPONENTS

SA0P1–08

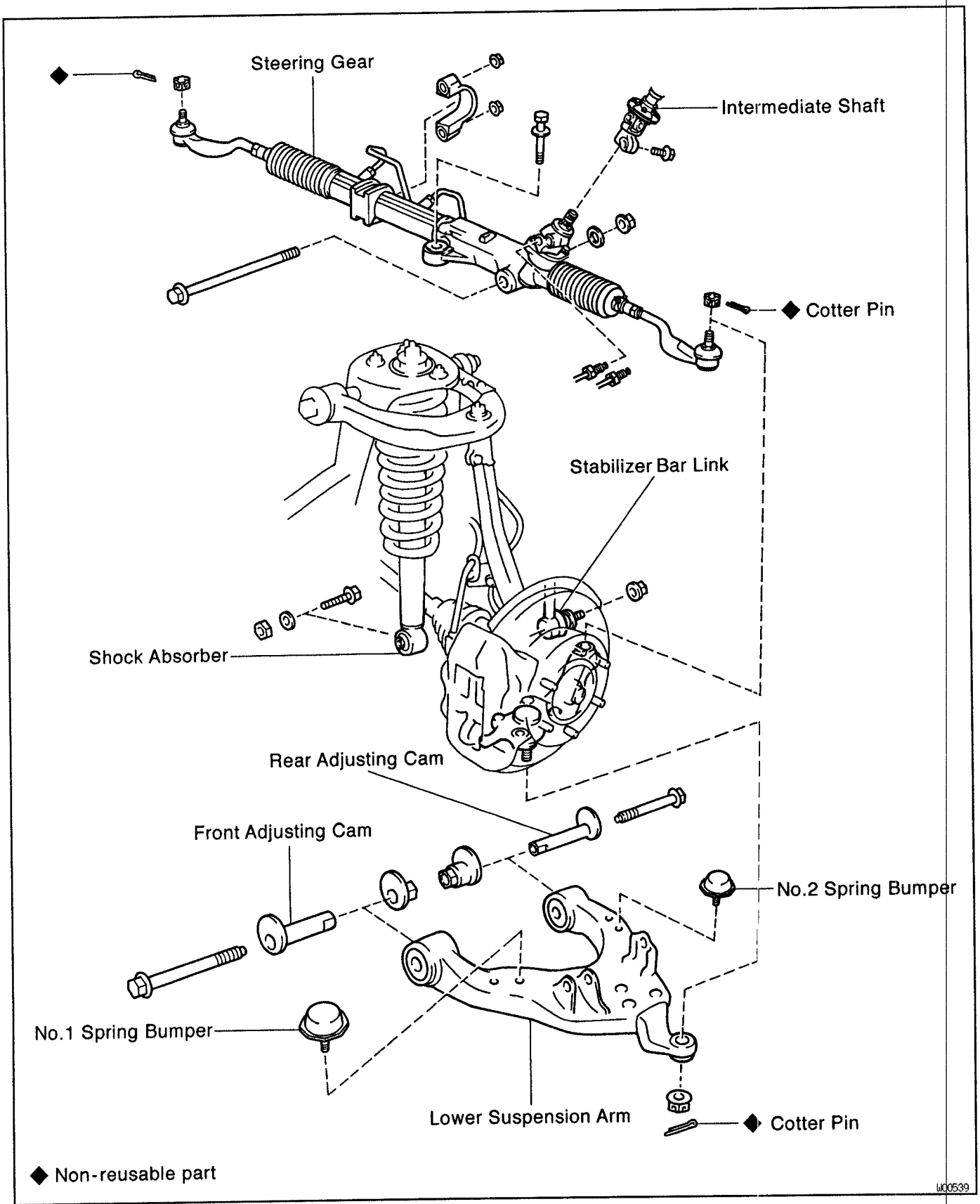

SA

LOWER SUSPENSION ARM REMOVAL

8A1WF-02

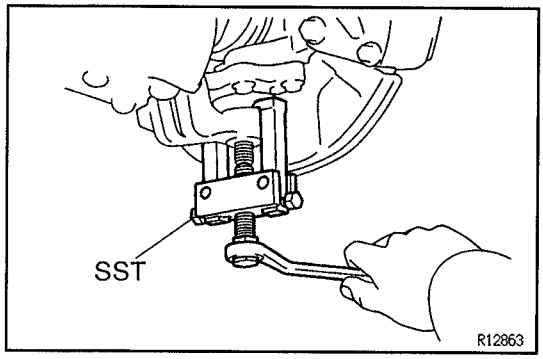

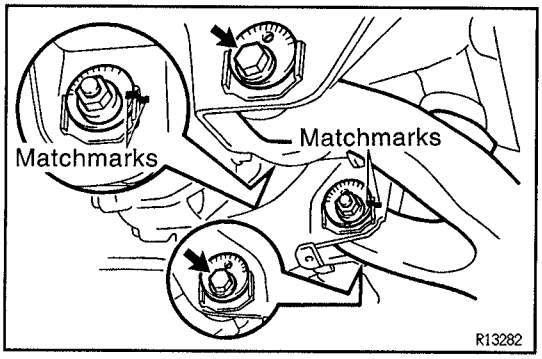

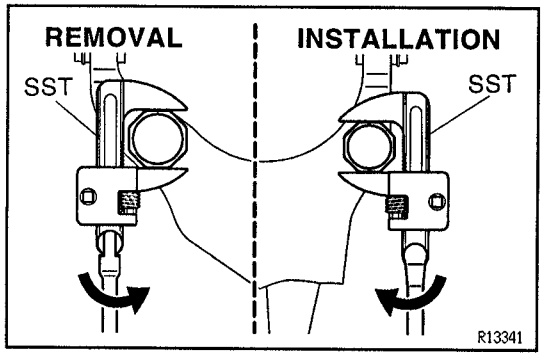

1. **REMOVE FRONT WHEEL**
   Torque: 110 N·m (1,150 kgf·cm, 83 ft·lbf)
2. **REMOVE STEERING GEAR ASSEMBLY**
   (See page SR–80)
3. **DISCONNECT STABILIZER BAR LINK**
   (See page SA–87)
4. **DISCONNECT SHOCK ABSORBER FROM LOWER SUSPENSION ARM**
   (See page SA–77)
5. **DISCONNECT LOWER BALL JOINT**

(a) Support the upper suspension arm and steering knuckle securely.

(b) Remove the cotter pin and nut from the lower ball joint.
Torque: 152 N·m (1,550 kgf·cm, 112 ft·lbf)

(b) Using SST, disconnect the lower ball joint from the lower suspension arm.
SST 09610–20012
NOTICE: Be careful not to damage the lower ball joint.
INSTALLLATION HINT: Face the cotter pin hale of the lower ball joint forward.

6. **REMOVE LOWER SUSPENSION ARM**

(a) Place matchmarks on the front and rear adjusting cams.

(b) Remove the nuts, adjusting cams and lower suspension arm.
Torque: 130 N·m (1,325 kgf·cm, 96 ft·lbf)

7. **REMOVE NO.1 AND NO.2 SPRING BUMPERS**
   Using SST, remove the No. 1 and No. 2 spring bumpers.
   SST 09922–10010
   Torque: 23 N·m (235 kgf·cm, 17 ft·lbf)
   INSTALLATION HINT: Use a torque wrench with a fulcrum length of 34.5 cm (13.6 in.).

LOWER SUSPENSION ARM INSTALLATION

8A282-01

Installation is in the reverse order of removal.
HINT: After installation, check front wheel alignment.
(See page SA–8)

SA

UPPER AND LOWER BALL JOINT

SA283-01

COMPONENTS

(Upper ball joint: See page SA–21)

Lower Ball Joint:

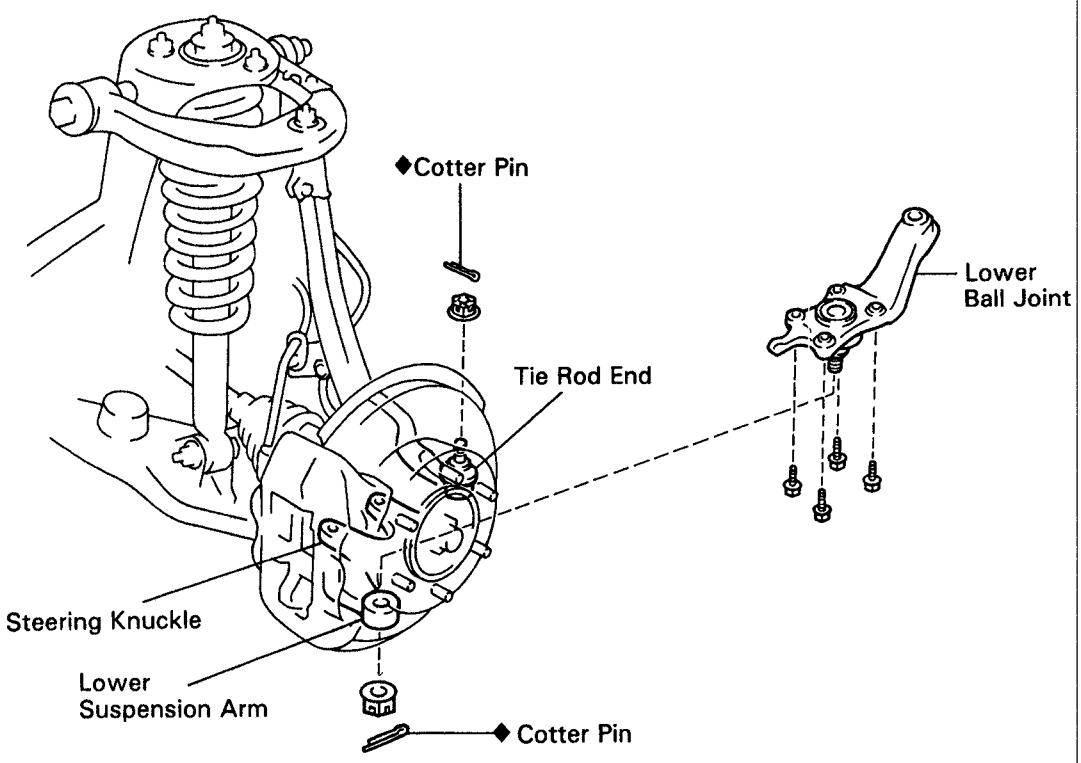

◆ Non-reusable part

R13647

SA1WH-02

UPPER BALL JOINT REMOVAL

REMOVE STEERING KNUCKLE WITH AXLE HUB
(See page SA–21)

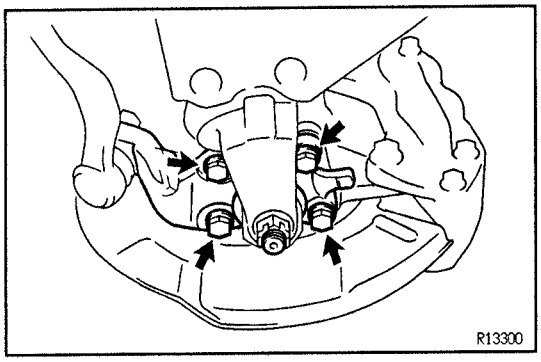

R13300

SA284-01

LOWER BALL JOINT REMOVAL

1. **REMOVE FRONT WHEEL**
   Torque: 110 N·m (1,150 kgf·cm, 83 ft·lbf)
2. **DISCONNECT TIE ROD END**

(a) Loosen the 4 bolts.
Torque: 113 N·m (1,150 kgf·cm, 83 ft·lbf)
REMOVAL HINT: Do not remove the bolts.

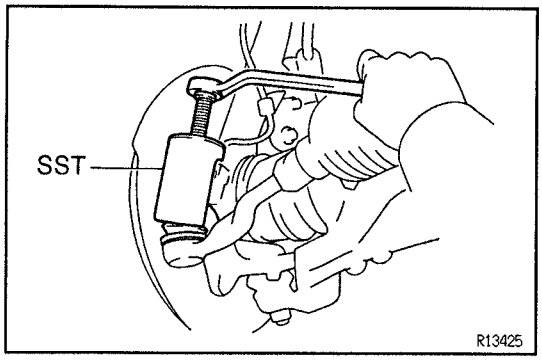

(b) Remove the cotter pin and nut from the tie rod end.
Torque: 90 N·m (930 kgf·cm, 67 ft·lbf)

(c) Using SST, disconnect the tie rod end from the steering knuckle.
SST 09610–20012

3. REMOVE LOWER BALL JOINT

(a) Remove the cotter pin and nut from the lower ball joint.
Torque: 152 N·m (1,550 kgf·cm, 112 ft·lbf)

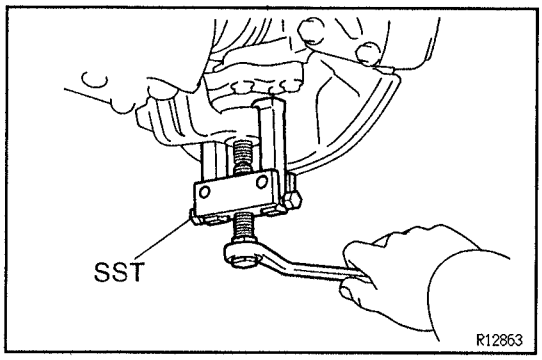

(b) Using SST, disconnect the lower ball joint from the lower suspension arm.
SST 09628–62011
INSTALLATION HINT: Face the cotter pin hole of the lower ball joint forward.

(c) Remove the 4 bolts.

(d) While lifting the upper suspension arm and steering knuckle, remove the lower ball joint.
REMOVAL HINT: After removing the lower ball joint, support the upper suspension arm and steering knuckle securely.

SA

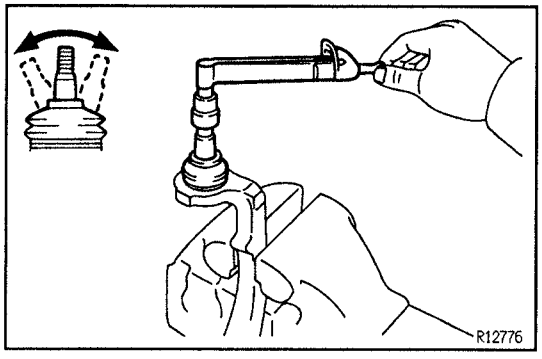

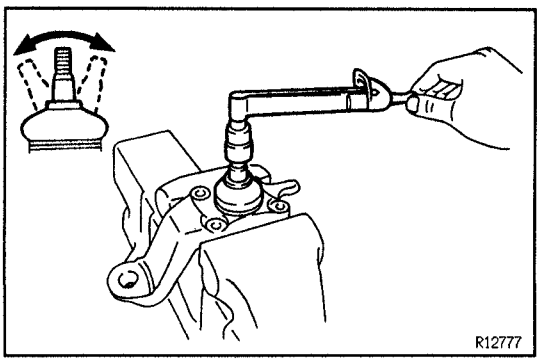

UPPER AND LOWER BALL JOINTS INSPECTION

SA1WK–02

INSPECT BALL JOINT FOR ROTATION CONDITION

(a) Flip the ball joint stud back and forth 5 times before installing the nut.

(b) Using a torque wrench, turn the nut continuously one turn every 2–4 seconds and take the torque reading on the 5th turn.
Torque (turning):
Upper ball joint
0.7 – 4.4 N·m (7 – 45 kgf·cm, 6 – 39 in.·lbf)
Lower ball joint
0.5 – 3.9 N·m (5 – 40 kgf·cm, 4 – 35 in.·lbf)

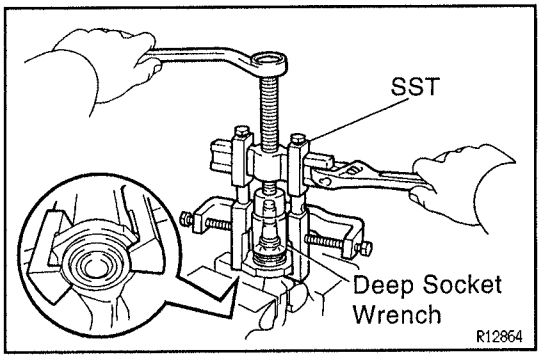

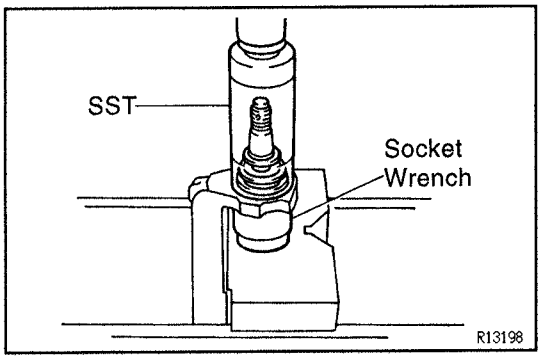

UPPER BALL JOINT REPLACEMENT

SA1WL–01

1. REMOVE UPPER BALL JOINT

(a) Remove the wire and boot.

(b) Using a snap ring expander, remove the snap ring.

(c) Using SST and a deep socket wrench, remove the upper ball joint.

SST 09950–40010 (09951–04010, 09952–04010, 09953–04020, 09954–04010, 09955–04030, 09957–04010, 09958–04010)

2. INSTALL UPPER BALL JOINT

(a) Using SST and a socket wrench, press in a new upper ball joint.

SST 09309–37010

(b) Using a snap ring expander, install a new snap ring.

(c) Install a new boot and fix it with a new wire.

HINT: Use the grease supplied in the kit.

UPPER BALL JOINT INSTALLATION

SA285–01

INSTALL STEERING KNUCKLE WITH AXLE HUB (See page SA–21)

LOWER BALL JOINT INSTALLATION

SA286–01

Installation is in the reverse order of removal.

HINT: After installation, check front wheel alignment. (See page SA–8)

SA

STABILIZER BAR
COMPONENTS

SA0PA-06

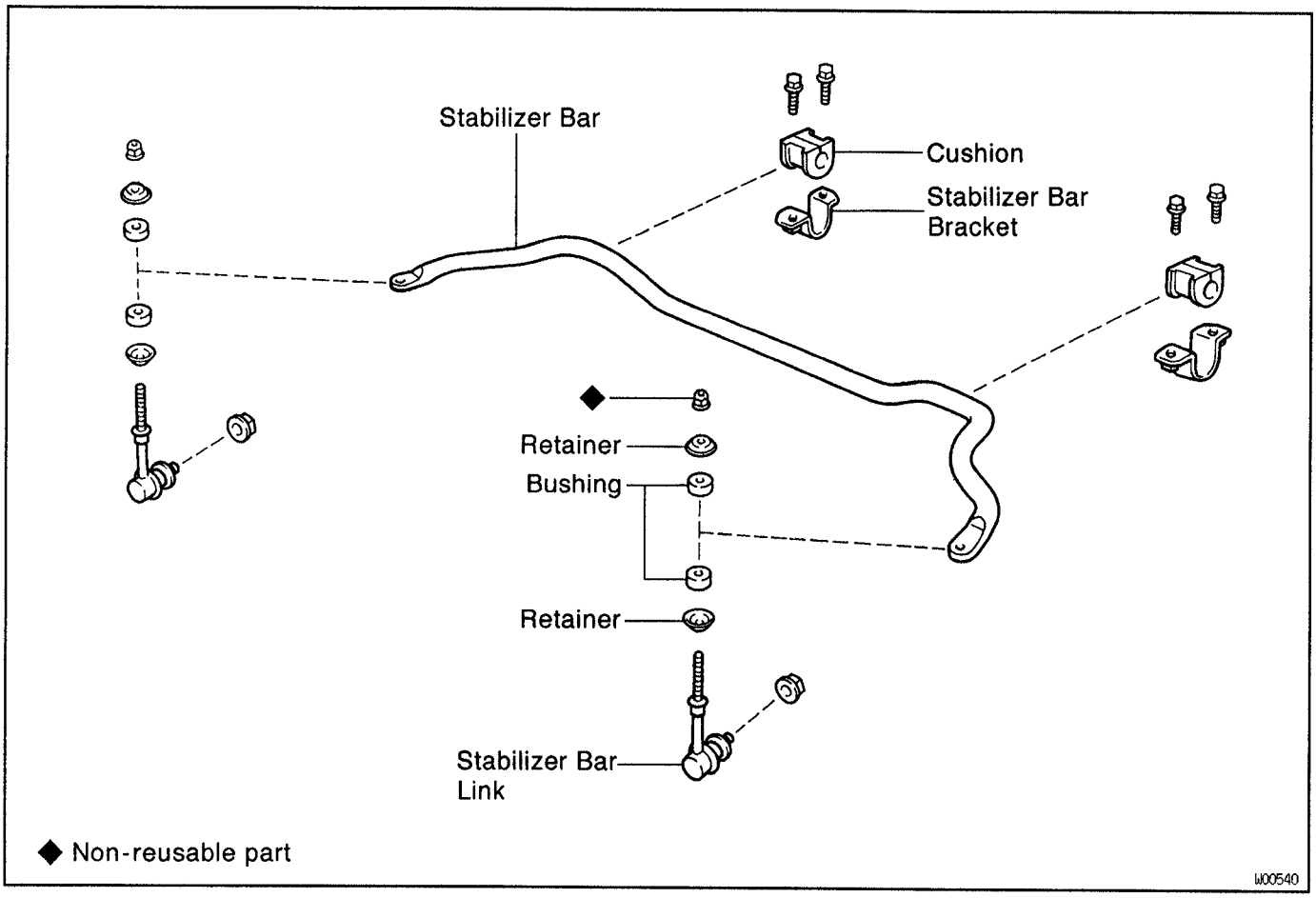

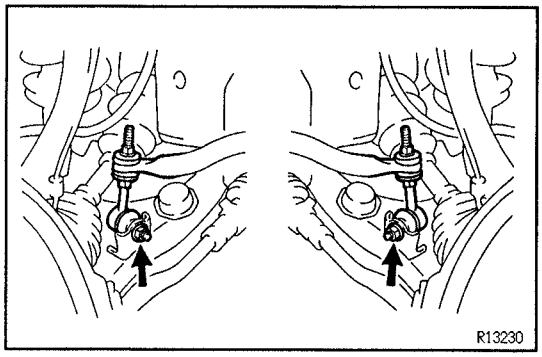

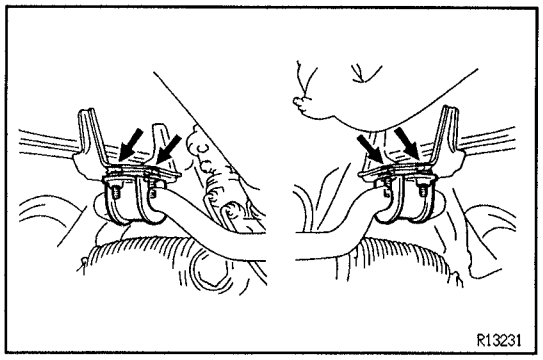

STABILIZER BAR AND LINK REMOVAL

SA1WM-02

1. **REMOVE FRONT WHEELS**
   Torque: 110 N·m (1,150 kgf·cm, 83 ft·lbf)
2. **DISCONNECT STABILIZER BAR LINKS**
   Remove the nuts and disconnect the stabilizer bar links from the lower suspension arm.
   Torque: 69 N·m (700 kgf·cm, 51 ft·lbf)
   HINT: If the ball joint stud turns together with the nut, use a hexagon wrench to hold the stud.
3. **REMOVE STABILIZER BAR**
   (a) Remove the 4 bracket set bolts and stabilizer bar with the cushions and brackets.
   Torque: 25 N·m (260 kgf·cm, 19 ft·lbf)
   (b) Remove the brackets and cushions from the stabilizer bar.

SA

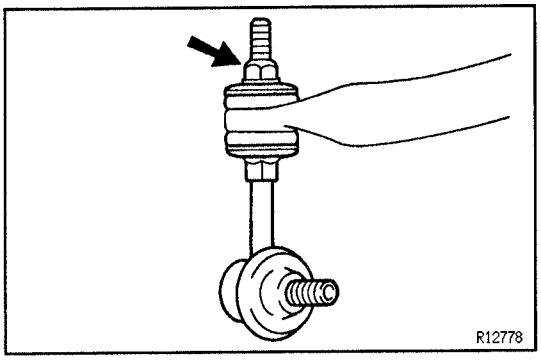

4. REMOVE STABILIZER BAR LINKS

Hold the stabilizer bar link, remove the nut retainers and bushings.

Torque: 29 N·m (300 kgf·cm, 22 ft·lbf)

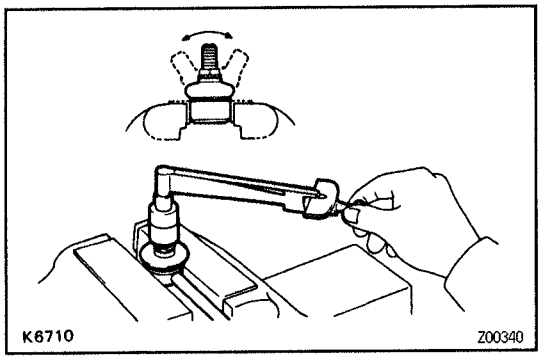

SA035-01

STABILIZER BAR LINK INSPECTION

INSPECT BALL JOINT FOR ROTATION CONDITION

(a) Flip the ball joint stud back and forth 5 times before installing the nut.

(b) Using a torque wrench, turn the stud continuously one turn every 2 — 4 seconds and take the torque reading on the 5th turn.

Torque (turning):

0.05 — 2.0 N·m (0.5 — 20 kgf·cm, 0.4 — 17 in.·lbf)

SA287-01

STABILIZER BAR AND LINK INSTALLATION

Installation is in the reverse order of removal.

SA

REAR AXLE

PREPARATION

SST (SPECIAL SERVICE TOOLS)

SA0MB–0C

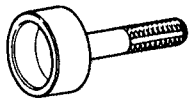	09223–56010 Crankshaft Rear Oil Seal Replacer	Rear axle bearing removal
	09308–00010 Oil Seal Puller	Oil seal removal
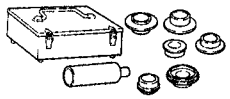	09316–60011 Transmission & Transfer Bearing Replacer	Axle shaft installation Bearing retainer installation
	(09316–00051) Replacer "D"	
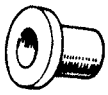	09515–30010 Rear Wheel Bearing Replacer	Rear axle bearing installation
	09521–25011 Rear Axle Shaft Puller	Rear axle shaft removal
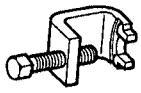	09650–17011 Hub Bolt Remover	Hub bolt replacement
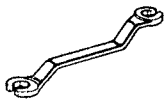	09751–36011 Brake Line Union Nut 10 x 12 mm Wrench	Brake line disconnection
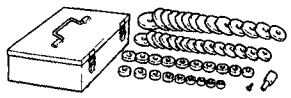	09950–60010 Replacer Set	
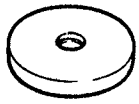	(09951–00560) Replacer 56	Axle bearing removal
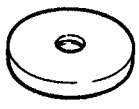	(09951–00610) Replacer 61	Outer oil seal installation
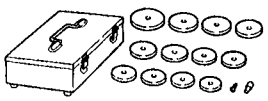	09950–60020 Replacer Set No.2	

SA

	(09951–00710) Replacer 71	Oil seal installation
	(09951–00890) Replacer 89	Rear axle bearing installation
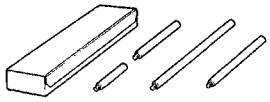	09950–70010 Handle Set	Outer oil seal installation
	(09951–07150) Handle 150	

SA0ME–05

RECOMMENDED TOOLS

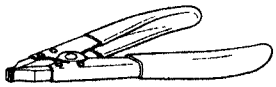	09905–00012 Snap Ring No.1 Expander .	
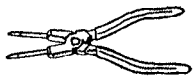	09905–00013 Snap Ring Pliers .	

SA07V–0F

EQUIPMENT

Dial indicator	
Torque wrench	

SA

REAR AXLE SHAFT
COMPONENTS

SA182–02

2WD:

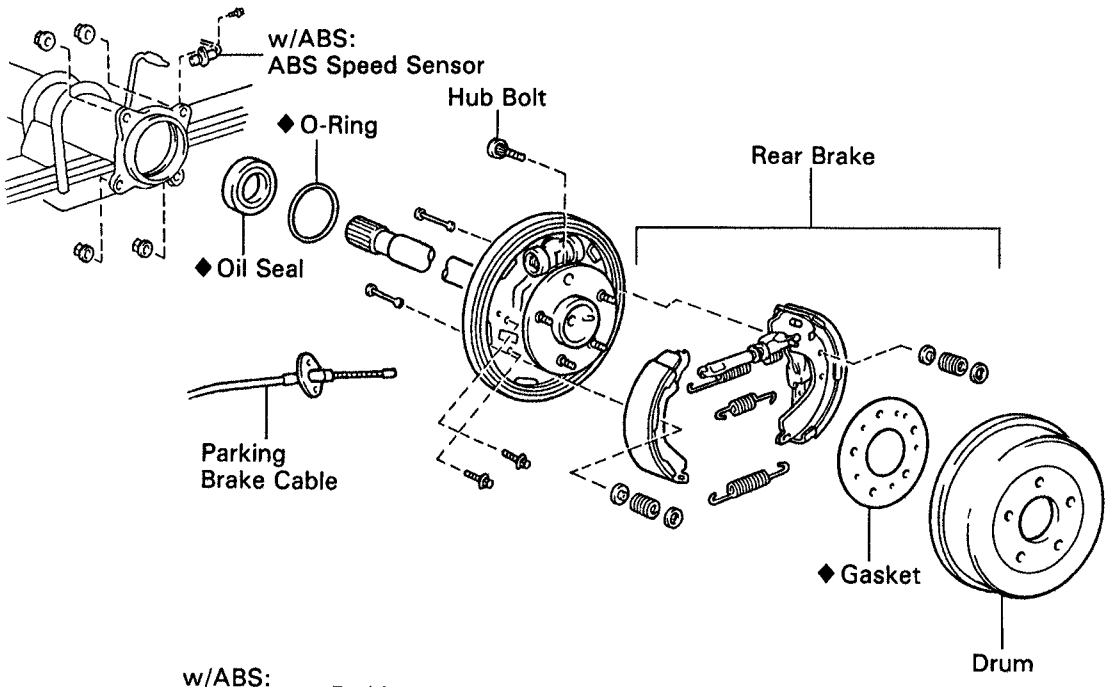

4WD:

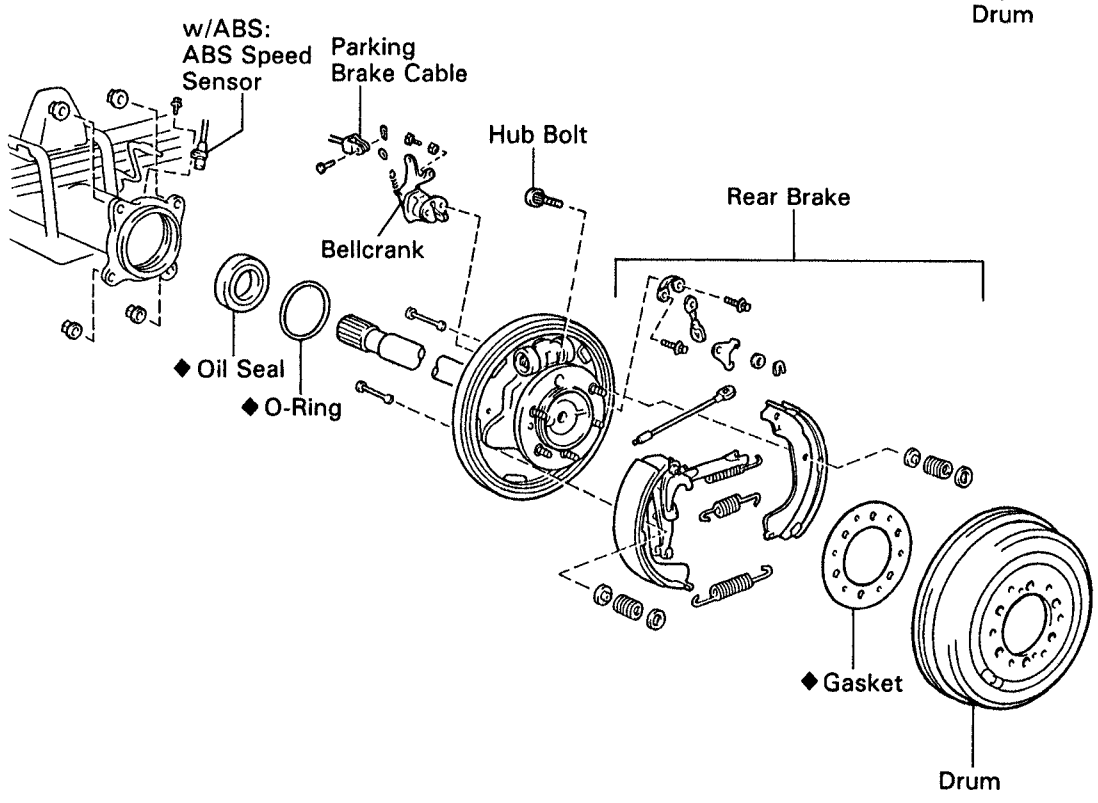

◆ Non-reusable part

R13403

SA

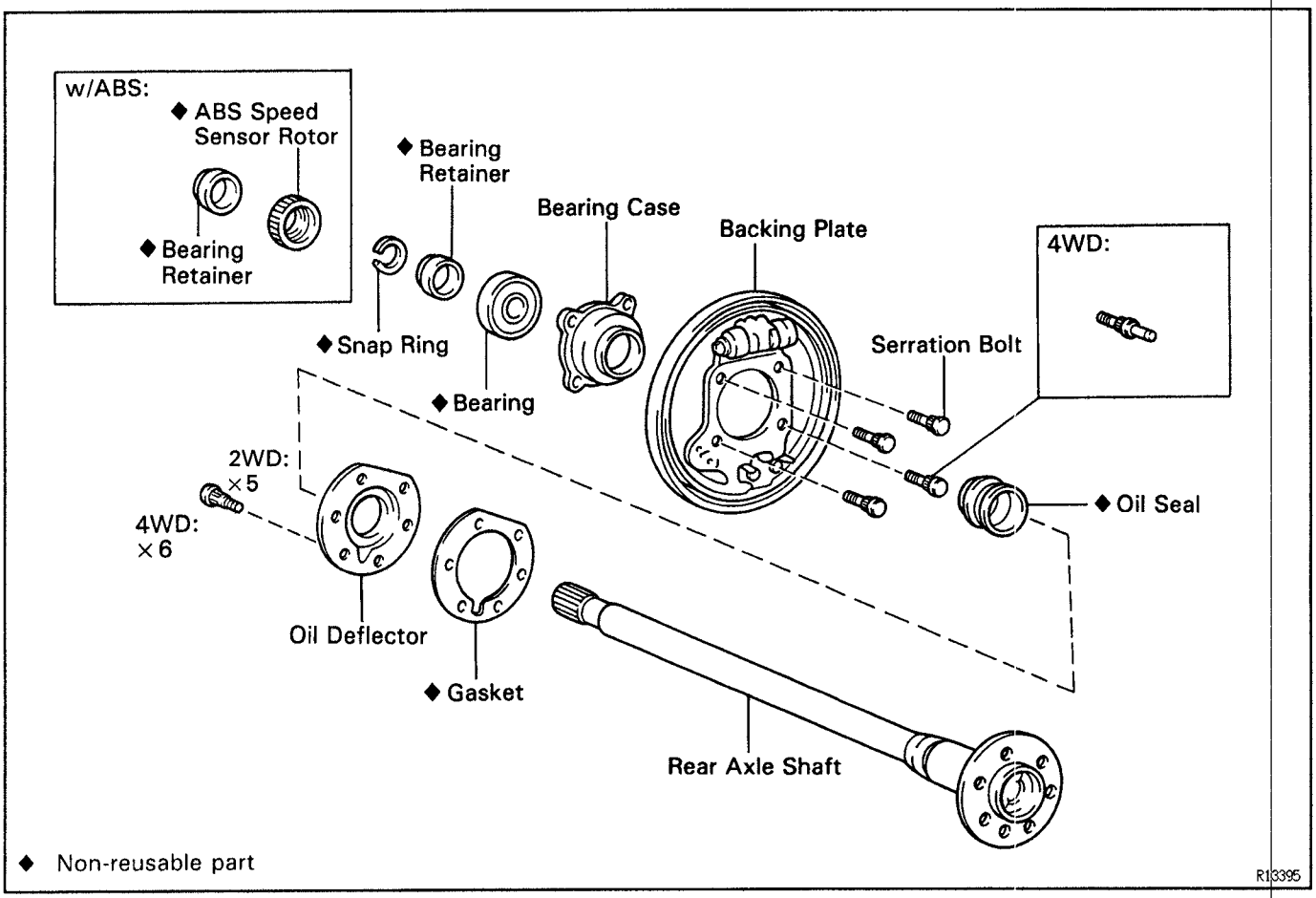

SA

SA1W9-03

REAR AXLE SHAFT REMOVAL

1. **REMOVE REAR WHEEL AND BRAKE DRUM**
   Torque: 110 N·m (1,150 kgf·cm, 83 ft·lbf)
   INSTALLATION HINT: After installation, bleed the brake system and check for leaks.
   (See page BR–6)

2. **CHECK BEARING BACKLASH AND AXLE SHAFT DEVIATION**

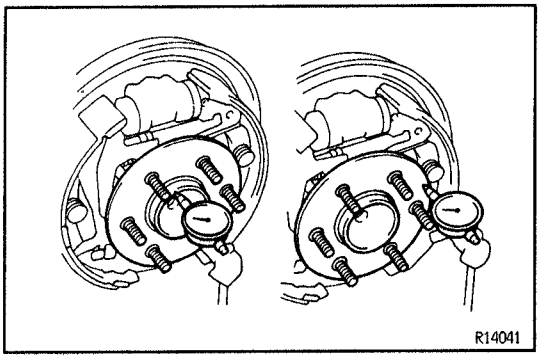

(a) Using a dial indicator, check the backlash in the bearing shaft direction.
Maximum: 0.7 mm (0.027 in.)
If it is greater than the maximum, replace the bearing.

(b) Using a dial indicator, check the deviation at the surface of the axle shaft outside the hub bolt.
Maximum: 0.1 mm (0.0039 in.)
If it is greater than the maximum, replace the axle shaft.

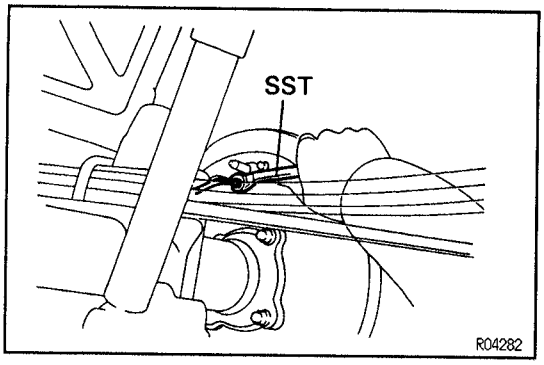

3. **w/ ABS:**
REMOVE ABS SPEED SENSOR FROM REAR AXLE HOUSING
Torque: 8 N·m (82 kgf·cm, 71 in.·lbf)
4. **REMOVE REAR BRAKE ASSEMBLY**
(See page BR–21, 25)
5. **DISCONNECT BRAKE LINE AND PARKING BRAKE CABLE**
Using SST, disconnect the brake line from the wheel cylinder.
SST 09751–36011
Torque: 15 N·m (155 kgf·cm, 11 ft·lbf)
6. **REMOVE REAR AXLE SHAFT ASSEMBLY**
(a) Remove the 4 backing plate mounting nuts.
Torque: 68 N·m (700 kgf·cm, 50 ft·lbf)
(b) Pull out the rear axle shaft assembly from the rear axle housing.
NOTICE: Be careful not to damage the oil seal.
7. **REMOVE O–RING FROM REAR AXLE HOUSING**

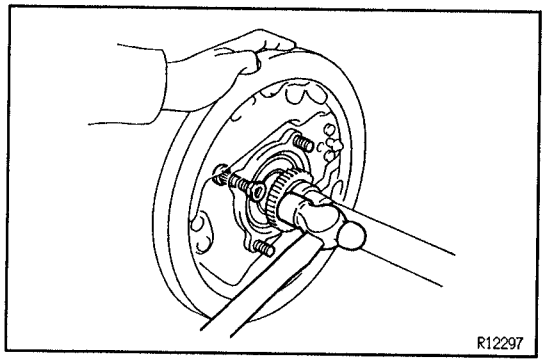

REAR AXLE SHAFT COMPONENTS INSPECTION AND REPAIR

SA184–03

1. **w/ ABS:**
REMOVE BEARING RETAINER (DIFFERENTIAL SIDE) AND ABS SPEED SENSOR ROTOR
(a) Attach 4 nuts to the serration bolts and remove the serration bolts from the backing plate using a hammer.
NOTICE: Do not reuse the nuts previously removed from the vehicle.
(b) Grind the retainer and sensor rotor surfaces using a grinder, then chisel them out with a chisel.
(c) Attach washers and nut to the serration bolts, then torque the nuts to install the serration bolts to the backing plate.
(d) Remove the 4 nuts from the serration bolts.
2. **REMOVE SNAP RING FROM AXLE SHAFT**
Using a snap ring expander, remove the snap ring.

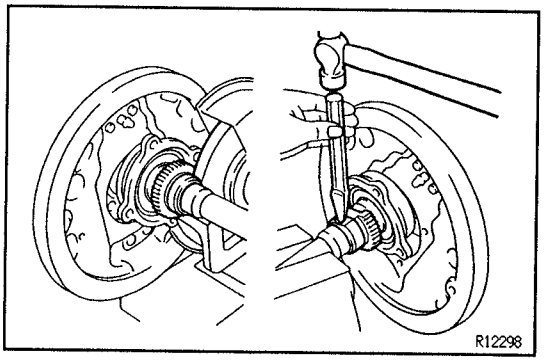

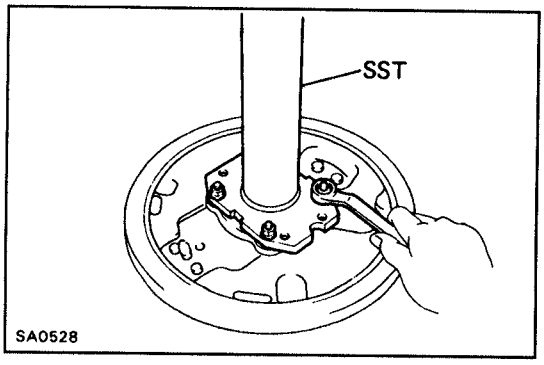

3. **REMOVE REAR AXLE SHAFT FROM BACKING PLATE**
(a) Position SST on the backing plate with 4 nuts.
SST 09521–25011

SA

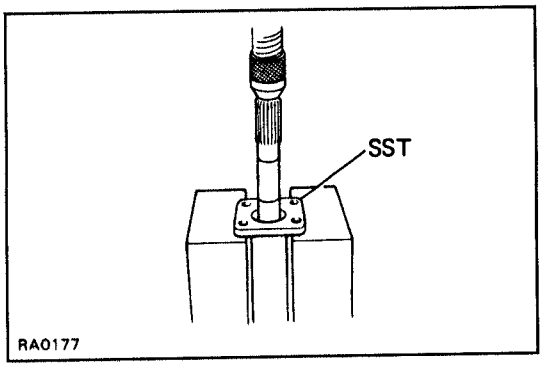

(b) Using a press, remove the rear axle shaft with the bearing retainer from the backing plate.
(c) Remove the SST.

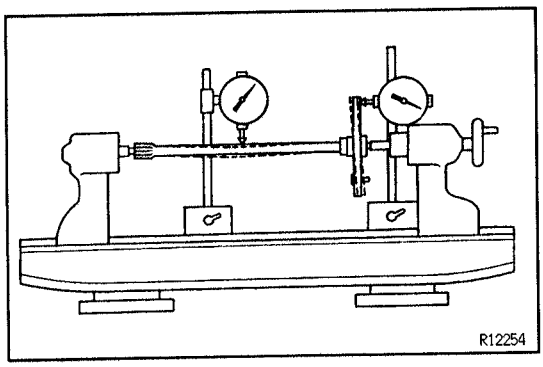

4. INSPECT AXLE SHAFT

Maximum shaft runout:
2.0 mm (0.079 in.)
Maximum flange runout:
0.1 mm (0.004 in.)

If the rear axle shaft or flange are damaged or worn, or if runout is greater than the maximum, replace the rear axle shaft.

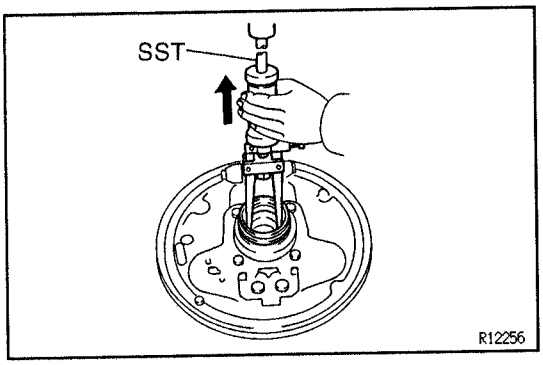

5. REMOVE OUTER OIL SEAL

Using SST, remove the oil seal.
SST 09308–00010

SA

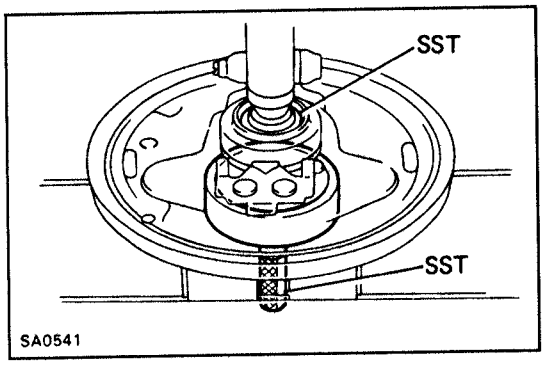

6. REPLACE REAR AXLE BEARING

(a) Using SST, remove the bearing.
SST 09223–56010, 09950–60010 (09951–00560)

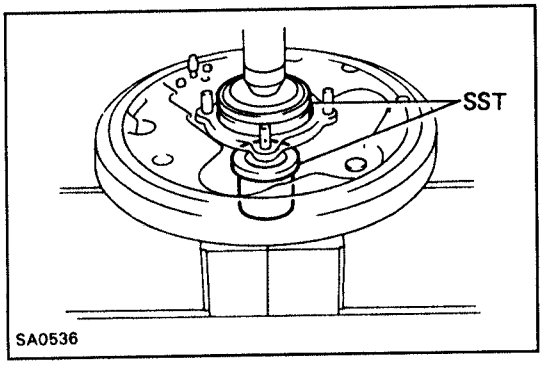

(b) Using SST, install a new bearing.
SST 09515–30010, 09950–60020 (09951–00890)

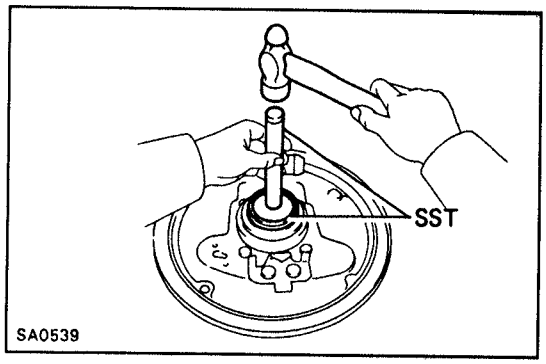

7. INSTALL NEW OUTER OIL SEAL

Using SST, install a new oil seal.
SST 09950–60010 (09951–00610),
09950–70010 (09951–07150)

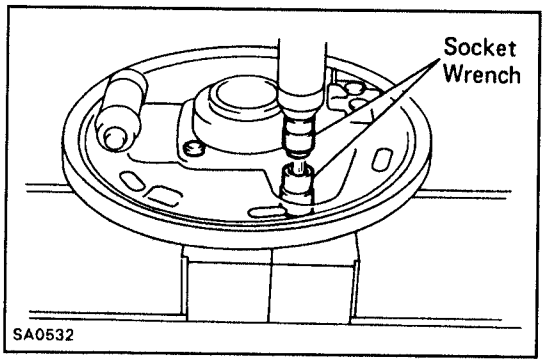

8. REPLACE BEARING CASE

(a) Remove the oil seal (outer side) and bearing.
(b) Install 4 nuts to the serration bolts.
(c) Using a hammer, remove the serration bolts and remove the bearing case.
(d) Position the backing plate on a new bearing case and, using 2 socket wrenches, install the serration bolts.
(e) Install a new bearing and oil seal (outer side).

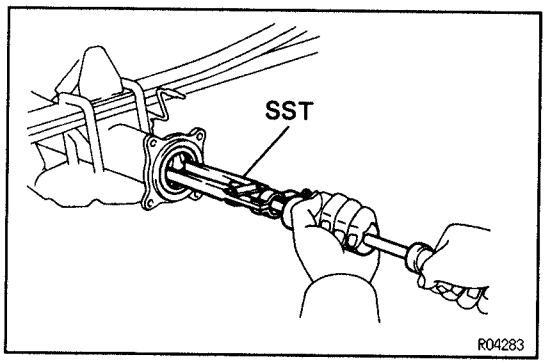

9. REPLACE OIL SEAL (INNER SIDE)

(a) Using SST, remove the oil seal.
SST 09308–00010

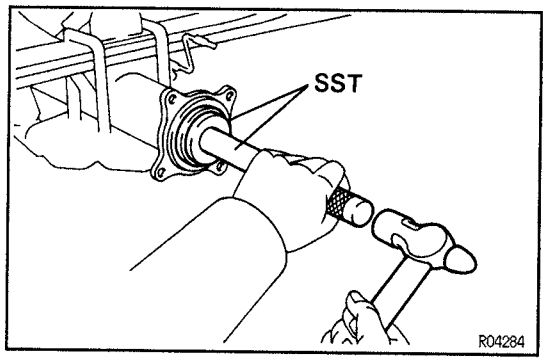

(b) Using SST, install a new oil seal.
SST 09950–60020 (09951–00710),
09950–70010 (09951–07150)
(c) Apply MP grease to the oil seal lip.

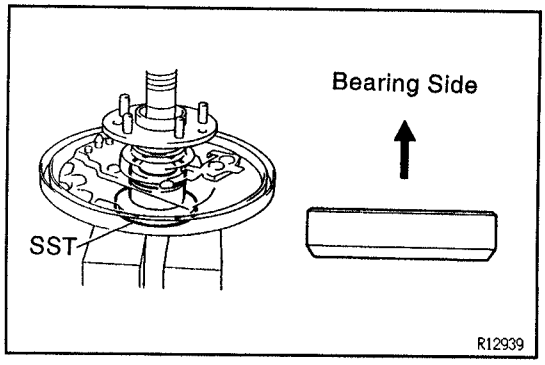

10. INSTALL REAR AXLE SHAFT IN BACKING PLATE

(a) Apply MP grease to the oil seal lip.
(b) Install the backing plate and bearing retainer on the rear axle shaft.
(c) Using SST and a press, install the rear axle shaft into the backing plate.
SST 09316–60010 (09316–00050)
(d) Using snap ring pliers, install a new snap ring.

SA

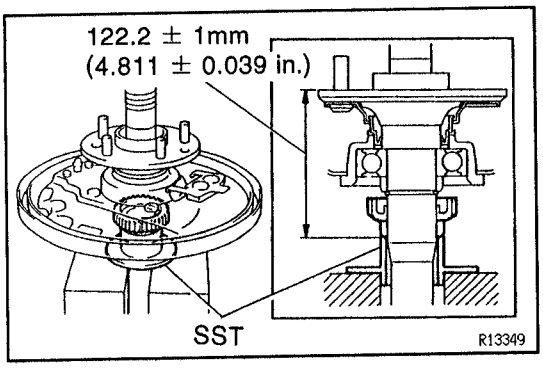

11. **w/ ABS:**
INSTALL ABS SPEED SENSOR ROTOR AND BEARING RETAINER (DIFFERENTIAL SIDE)
Using SST and a press, install a new sensor rotor and new bearing retainer to the axle shaft.
SST 09316–60010 (09316–00050)
Standard length:
122.2 ± 1.0 mm (4.811 ± 0.039 in.)

SA288-01

REAR AXLE SHAFT INSTALLATION

Installation is in the reverse order of removal.
HINT: After installation, bleed brake system and check ABS speed sensor signal.
(See page BR–5, 51)

SA090-09

HUB BOLT REPLACEMENT

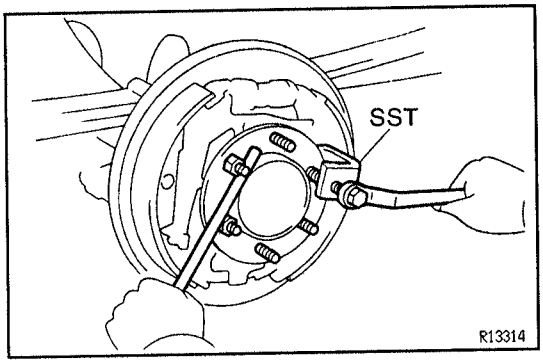

1. **REMOVE WHEEL AND BRAKE DRUM**
2. **REMOVE HUB BOLT**
Using SST, remove the hub bolt.
SST 09650–17011

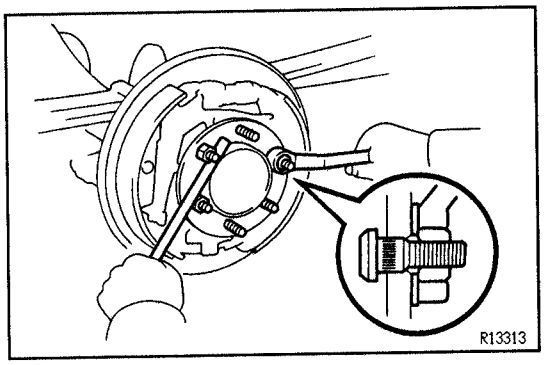

3. **INSTALL HUB BOLT**
Install a washer and nut to a new hub bolt as shown in the illustration, and install the hub bolt with torquing the nut.
4. **INSTALL BRAKE DRUM AND WHEEL**
Torque: 110 N·m (1,150 kgf·cm, 83 ft·lbf)

SA

REAR DIFFERENTIAL

PREPARATION

SST (SPECIAL SERVICE TOOLS)

SAGLP-07

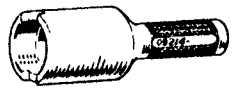	09214–76011	Crankshaft Pulley Replacer	3RZ–FE, 5VZ–FE w/Diff. lock: Oil seal installation
	09223–15020	Oil Seal & Bearing Replacer	3RZ–FE, 5VZ–FE w/Diff. lock: Side bearing installation
	09308–00010	Oil Seal Puller	3RZ–FE, 5VZ–FE w/Diff. lock: Front bearing outer race removal
	09308–10010	Oil Seal Puller	Oil seal removal
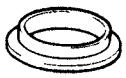	09316–12010	Transfer Bearing Replacer	3RZ–FE, 5VZ–FE w/o Diff. lock: Oil seal installation
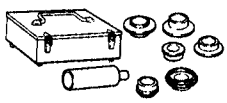	09316–60011	Transmission & Transfer Bearing Replacer	3RZ–FE, 5VZ–FE w/Diff. lock: Bearing outer race installation
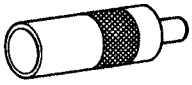	(09316–00011)	Replacer Pipe	
	(09316–00021)	Replacer "A"	
	(09316–00051)	Replacer "D"	
	09330–00021	Companion Flange Holding Tool	Companion flange removal and installation
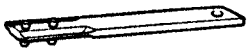	09504–00011	Differential Side Bearing Adjusting Nut Wrench	3RZ–FE, 5VZ–FE w/Diff. lock: Side bearing adjustment
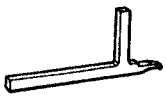	09504–22011	Differential Side Bearing Replacer	3RZ–FE, 5VZ–FE w/Diff. lock: Side bearing plate washer removal

SA

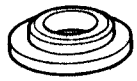	09506–30012	Differential Drive Pinion Rear Bearing Cone Replacer	2RZ–FE and 3RZ–FE, 5VZ–FE w/Diff. lock: Rear bearing installation
	09506–35010	Differential Drive Pinion Rear Bearing Replacer	3RZ–FE, 5VZ–FE w/Diff. lock: Rear bearing installation
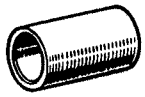	09523–36010	Rear Axle Hub Guide Tool	3RZ–FE, 5VZ–FE w/o Diff. lock: Dust deflector installation
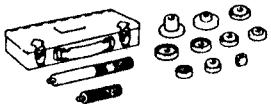	09550–10012	Replacer Set "B"	2RZ–FE: Side bearing installation
	(09252–10010)	No. 1 Replacer Handle–	
	(09557–10010)	Differential Drive Pinion Front Bearing Replacer	
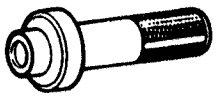	09554–30011	Differential Oil Seal Replacer	2RZ–FE: Oil seal installation
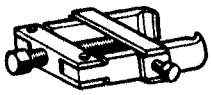	09556–22010	Drive Pinion Front Bearing Remover	Front bearing removal
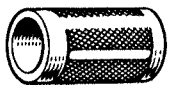	09636–20010	Upper Ball Joint Dust Cover Replacer	2RZ–FE: Dust deflector installation
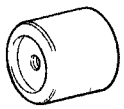	09649–17010	Steering Knuckle Tool	3RZ–FE, 5VZ–FE w/Diff. lock: Front oil seal installation
	09726–40010	Lower Control Shaft Bearing Replacer	3RZ–FE, 5VZ–FE w/Diff. lock: Dust diflector installation
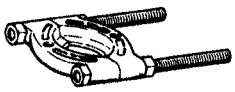	09950–00020	Bearing Remover	Dust deflector removal Rear bearing removal
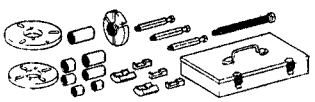	09950–30010	Puller A Set	Companion flange removal Front bearing installation
	(09951–03010)	Upper Plate	

SA

	(09953–03010) Center Bolt	
	(09954–03010) Arm	
	(09955–03030) Lower Plate 130	
	(09956–03020) Adapter 18	2RZ–FE and 3RZ–FE, 5VZ–FE w/Diff. lock:
	09956–03050 Adapter 24	3RZ–FE, 5VZ–FE w/o Diff. lock:
	09950–40010 Puller B Set	Side bearing removal
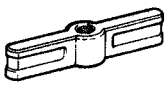	(09951–04010) Hanger 150	
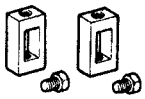	(09952–04010) Slide Arm	
	(09953–04020) Center Bolt 150	
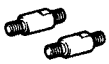	(09954–04010) Arm 25	
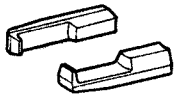	(09955–04060) Claw No.6	
	(09957–04010) Attachment	
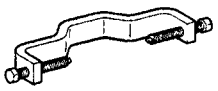	(09958–04010) Holder	
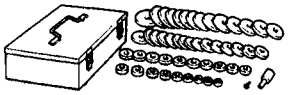	09950–60010 Replacer Set	

SA

	(09951–00450) Replacer 45	2RZ–FE: Side bearing removal and installation
	(09951–00480) Replacer 48	3RZ–FE, 5VZ–FE w/o Diff. lock: Side bearing removal and installation
	(09951–00640) Replacer 64	Side bearing installation
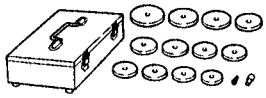	09950–60020 Replacer Set No.2	
	(09951–00710) Replacer 71	2RZ–FE: Front bearing outer race installation
	(09951–00790) Replacer 79	2RZ–FE: Rear bearing outer race installation
	(09951–00910) Replacer 91	3RZ–FE, 5VZ–FE w/o Diff. lock: Rear bearing outer race installation
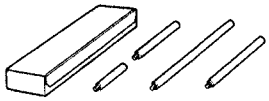	09950–70010 Handle Set	3RZ–FE, 5VZ–FE w/o Diff. lock: Side bearing installation
	(09951–07150) Handle 150	

SA0L2–06

RECOMMENDED TOOLS

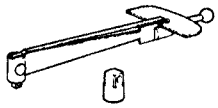	09025–00010 Torque Wrench (30 kgf·cm) .	
	09031–00030 Pin Punch .	
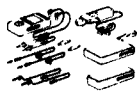	09082–00050 TOYOTA Electrical Tester Set.	3RZ–FE, 5VZ–FE w/Diff. lock:

EQUIPMENT

SA0LR-05

Dial indicator or dial indicator with magnetic base	
Micrometer	3RZ–FE, 5VZ–FE w/Diff. lock:
Voltmeter	3RZ–FE, 5VZ–FE w/Diff. lock:
Torque wrench	
Ohmmeter	3RZ–FE, 5VZ–FE w/Diff. lock:

LUBRICANT

SA0L8-06

Item	Capacity	Classification
Differential oil (2RZ–FE)	1.35 liters (1.43 US qts., 1.19 Imp.qts)	Hypoid gear oil API GL–5 Above – 18°C (0°F) SAE 90 Below –18°C (0°F) SAE 80W or 80W–90
Differential oil (3RZ–FE, 5VZ–FE)	4WD Extra long models: 2.05 liters (2.17 US qts., 1.80 Imp.qts) Other models: w/Diff. lock 2.65 liters (2.80 US qts., 2.33 Imp.qts) w/o Diff. lock 2.55 liters (2.69 US qts., 2.24 Imp.qts)	Hypoid gear oil API GL–5 Above – 18°C (0°F) SAE 90 Below –18°C (0°F) SAE 80W or 80W–90

SSM (SPECIAL SERVICE MATERIALS)

SA0LT-03

08826–00090	Seal Packing 1281, THREE BOND 1281 or equivalent (FIPG)	3RZ–FE, 5VZ–FE w/Diff. lock: Cover x Differential carrier Actuator x Differential carrier
08833–00070	Adhesive 1324, THREE BOND 1324 or equivalent	3RZ–FE, 5VZ–FE w/Diff. lock: Shift fork shaft set bolt Pinion shaft pin
08833–00100	THREE BOND 1360K or equivalent	Ring gear set bolts

ON–VEHICLE REPAIR
COMPONENTS

SA05G-06

2RZ-FE
3RZ-FE, 5VZ-FE w/Diff. lock :

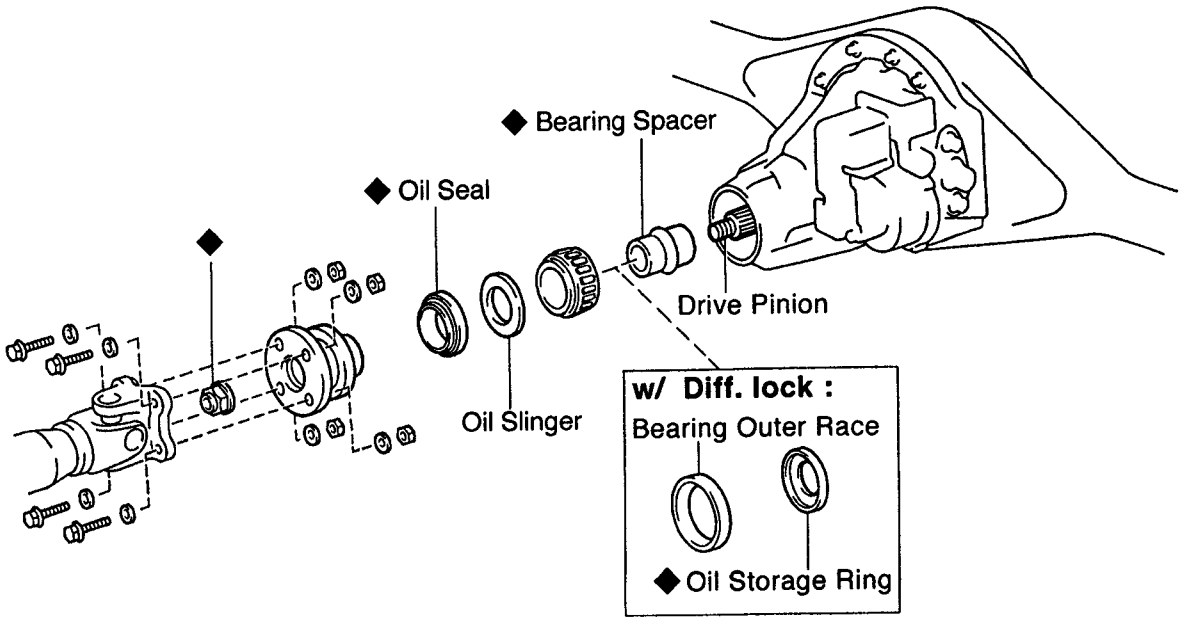

SA

3RZ-FE, 5VZ-FE w/o Diff. lock :

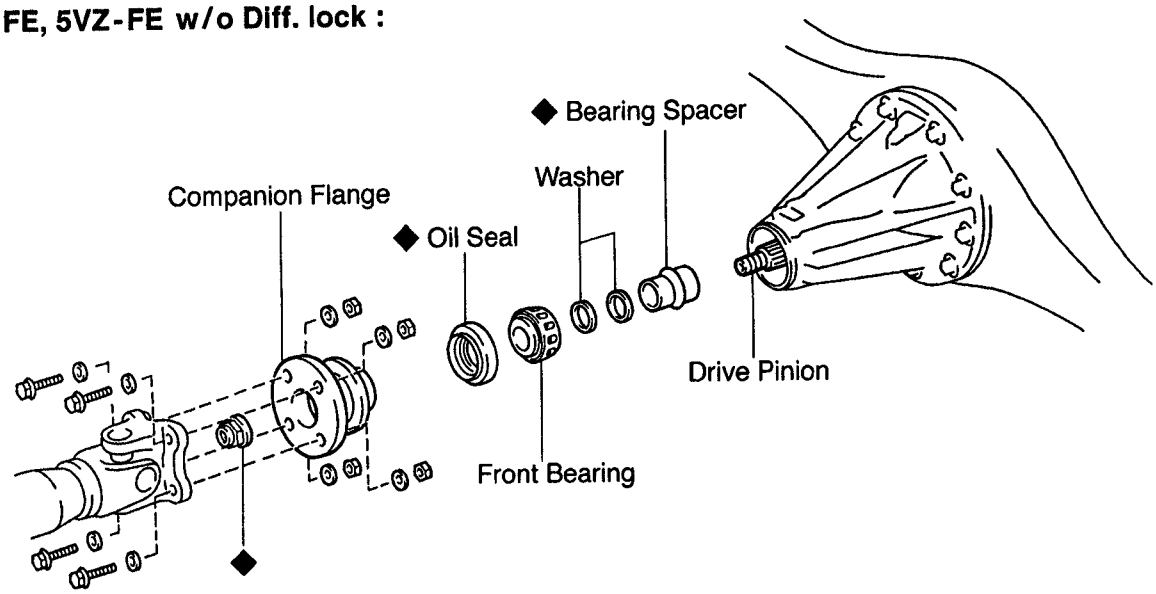

◆ Non-reusable part

R15883

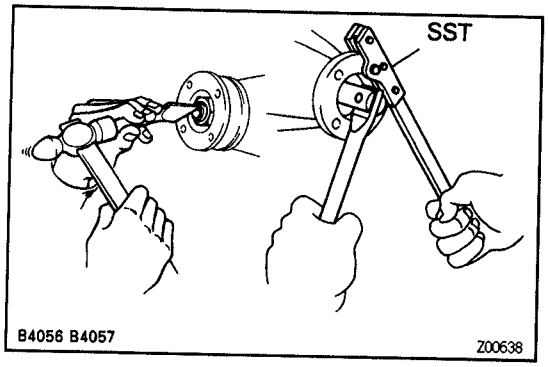

FRONT OIL SEAL REPLACEMENT

SA2AY-01

1. **DRAIN DIFFERENTIAL OIL**
2. **DISCONNECT REAR PROPELLER SHAFT**
   (See page PR–6)
3. **REMOVE COMPANION FLANGE**

(a) Using a chisel and a hammer, loosen the staked part of the nut.

(b) Using SST to hold the flange, remove the nut.
SST 09330–00021

(c) Using SST, remove the companion flange.
SST 09950–30010 (09951–03010, 09953–03010, 09954–03010, 09955–03030, 09956–03020, 09956–03050)

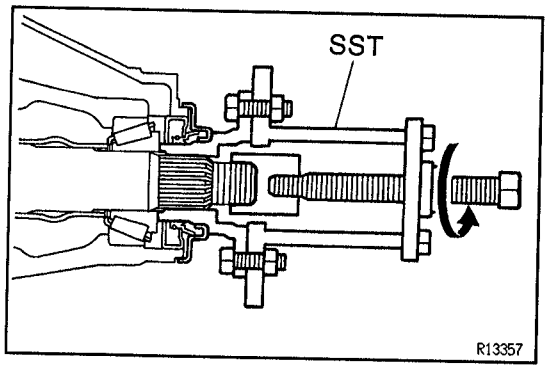

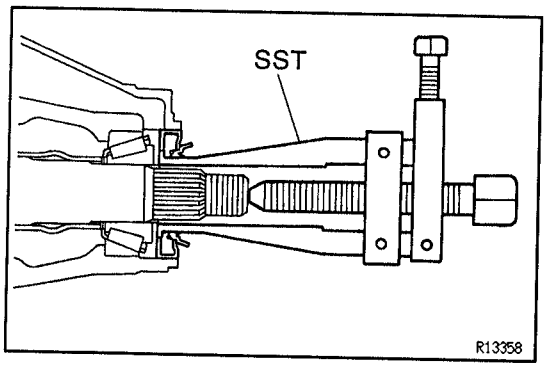

4. **REMOVE OIL SEAL**
   Using SST, remove the oil seal.
   SST 09308–10010
5. **Except 3RZ–FE, 5VZ–FE w/o Diff. lock:**
   REMOVE OIL SLINGER

SA

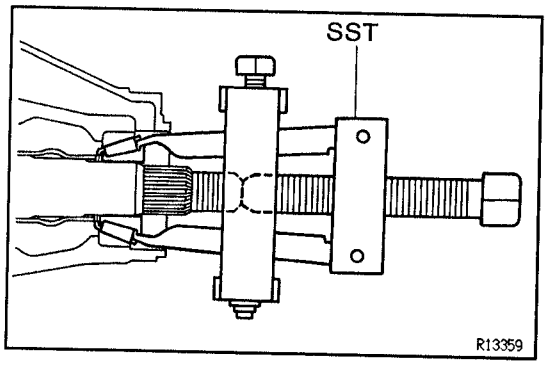

6. **REMOVE FRONT BEARING**
   Using SST, remove the front bearing from the drive pinion.
   SST 09556–22010

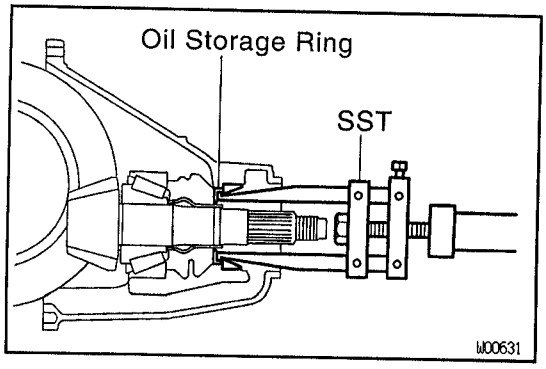

7. **3RZ–FE, 5VZ–FE w/Diff. lock:**
   REMOVE FRONT BEARING OUTER RACE AND OIL STRAGE RING

(a) Using SST, remove the front bearing outer race.
SST 09308–00010

(b) Using a screwdriver, bend the oil storage ring and remove it.

8. REMOVE BEARING SPACER

(a) 3RZ–FE, 5VZ–FE w/o Diff. lock:
Remove the 2 washers.

(b) Remove the bearing spacer.

9. INSTALL NEW BEARING SPACER

(a) Install a new bearing spacer.

(b) 3RZ–FE, 5VZ–FE w/o Diff. lock:
Install the 2 washers.

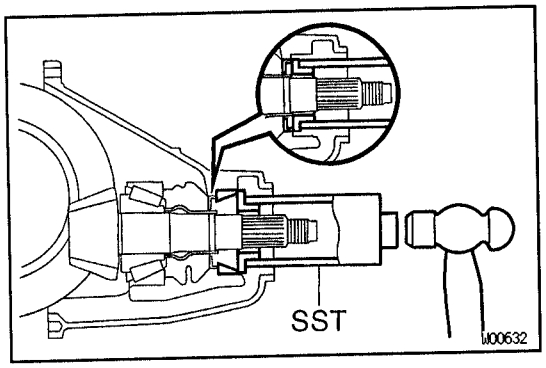

10. 3RZ–FE, 5VZ–FE w/Diff. lock:
INSTALL OIL STORAGE RING AND FRONT BEARING OUTER RACE

(a) Using SST and a hammer, install a new oil strage ring.
SST 09316–60011 (09316–00011, 09316–00021)

(b) Using SST and a hammer, install the front bearing outer race.
SST 09316–60011 (09316–00011, 09316–00021)

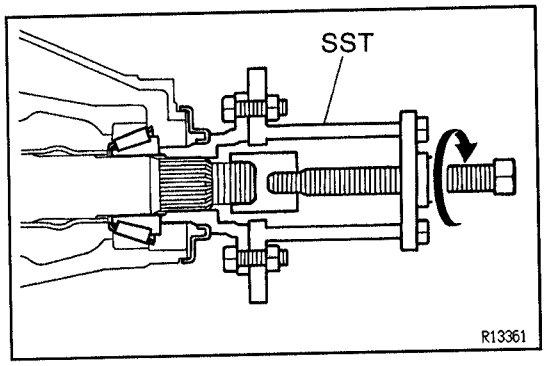

11. INSTALL FRONT BEARING

(a) Place the front bearing.

(b) Except 3RZ–FE, 5VZ–FE w/o Diff. lock:
Place the oil slinger.

(c) Using SST and the companion flange, install the front bering then remove the companion flange.
SST 09950–30010 (09951–03010, 09953–03010, 09954–03010, 09955–03030, 09956–03030, 09956–03040)

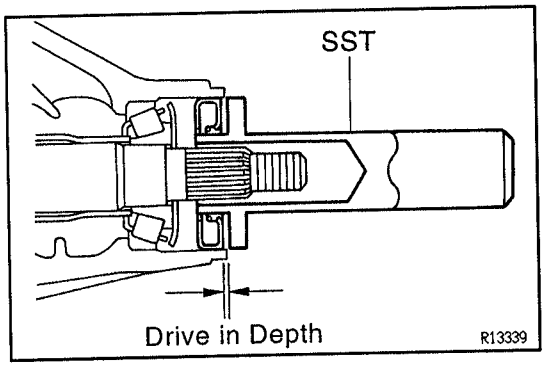

12. INSTALL NEW OIL SEAL

(a) Apply MP grease to a new oil seal.

(b) Using SST, install the oil seal.
2RZ–FE:
SST 09554–30011
Oil seal drive in depth:
1.5 mm (0.059 in.)

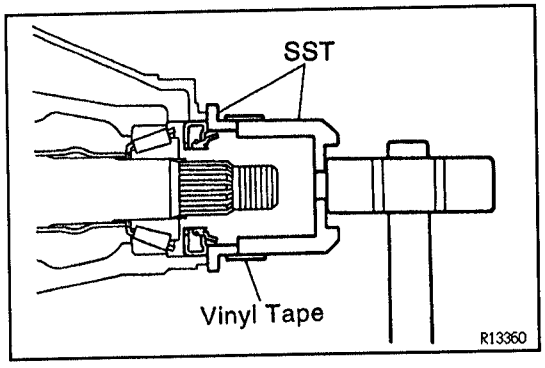

3RZ–FE, 5VZ–FE w/o Diff. lock:
SST 09649–17010, 09316–12010
Oil seal drive in depth:
0.5 mm (0.020 in.)
HINT: Connect SST with vinyl tape.

SA

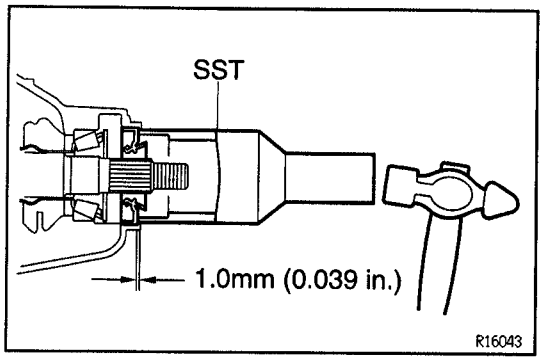

3RZ–FE, 5VZ–FE w/Diff. lock:
SST 09214–76011
Oil seal drive in depth:
1.0 mm (0.039 in.)

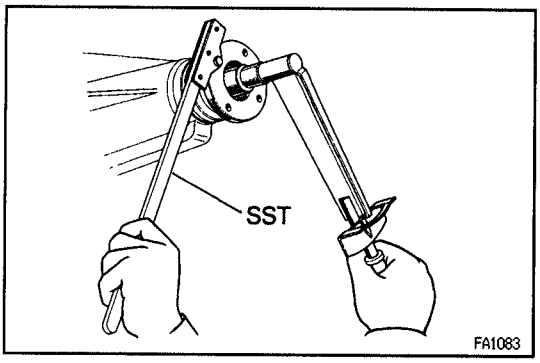

13. INSTALL COMPANION FLANGE

(a) Place the companion flange on the drive pinion.
(b) Apply light coat of hypoid gear oil on threads of a new companion flange nut.
(c) Using SST to hold the flange, torque the nut.
SST 09330–00021
2RZ–FE:
Torque: 108 N·m (1,100 kgf·cm, 80 ft·lbf)
3RZ–FE, 5VZ–FE w/o Diff. lock:
Torque: 147 N·m (1,500 kgf·cm, 109 ft·lbf)
3RZ–FE, 5VZ–FE w/Diff. lock:
Torque: 196 N·m (2,000 kgf·cm, 145 ft·lbf)

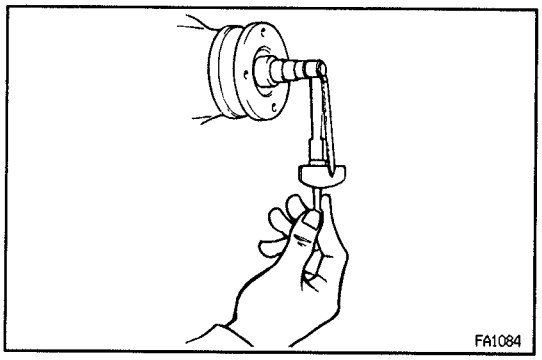

14. ADJUST DRIVE PINION PRELOAD
(See page SA–119, 132, 145)

15. STAKE DRIVE PINION NUT

16. CONNECT REAR PROPELLER SHAFT
(See page PR–14)

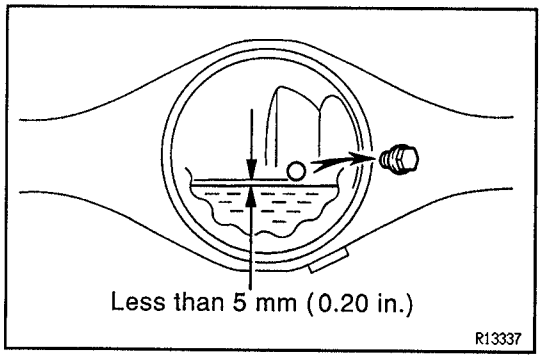

17. FILL DIFFERENTIAL WITH HYPOID GEAR OIL

Torque:
Drain plug: 49 N·m (500 kgf·cm, 39 ft·lbf)
Filler plug: 49 N·m (500 kgf·cm, 39 ft·lbf)
Oil type
Hypoid gear oil API GL–5
Recommended oil viscosity

Above – 18°C (0°F)	SAE 90
Below – 18°C (0°F)	SAE 80 W or 80 W – 90

Capacity

2RZ–FE	1.35 liters (1.43 US qts, 1.19 Imp.qts)
3RZ–FE 5VZ–FE	4WD Extra long models: 2.05 liters (2.17 US qts., 1.80 Imp.qts) Other models: w/Diff. lock: 2.65 liters (2.80 US qts., 2.33 Imp.qts) w/o Diff. lock: 2.55 liters (2.69 US qts., 2.24 Imp.qts)

SA

ASSEMBLY REMOVAL AND INSTALLATION

COMPONENTS

SA08U-08

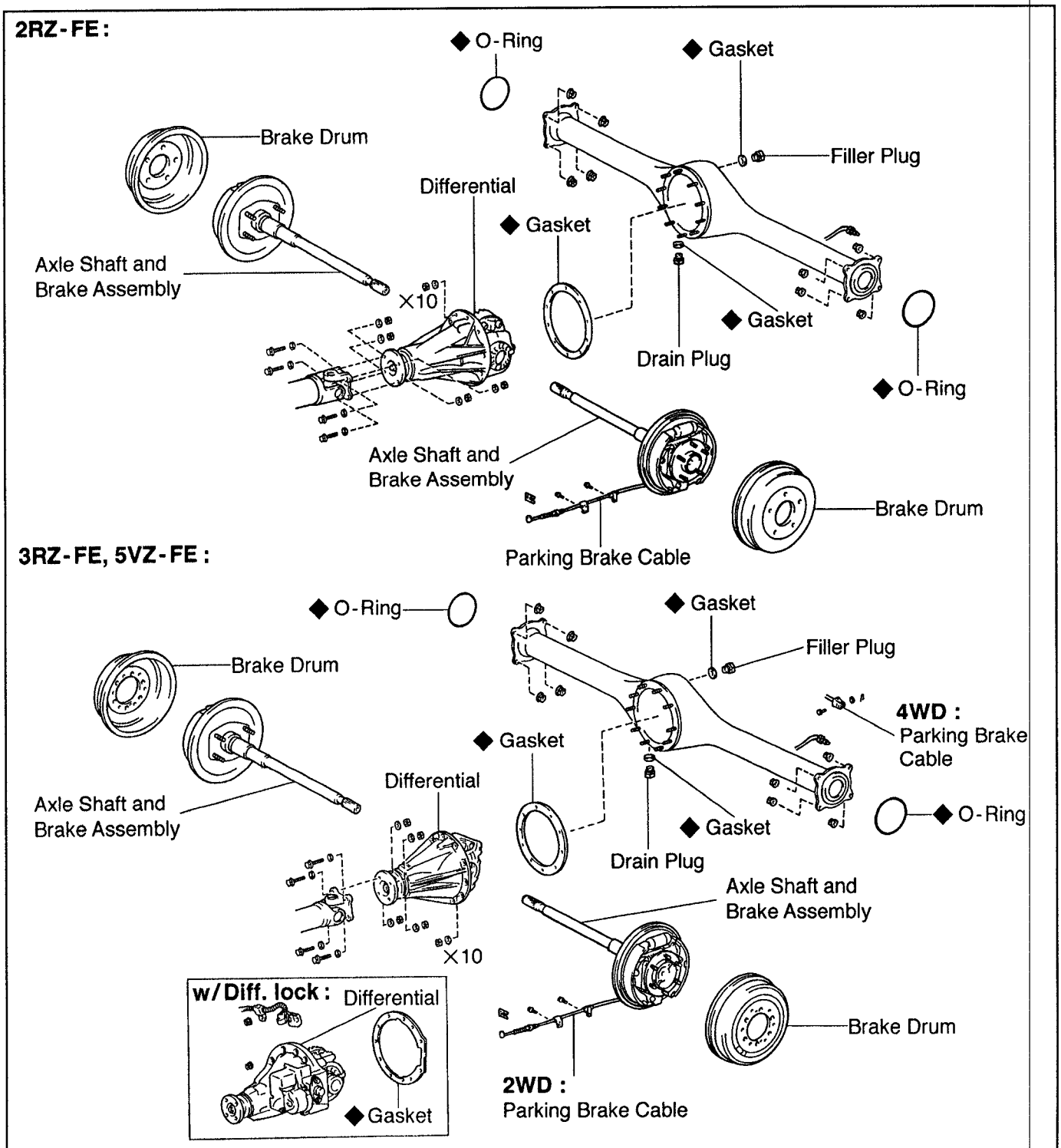

◆ Non-reusable part

R13397
R15885
Z16460

SA28A–01

DIFFERENTIAL REMOVAL

1. **w/DIFF. LOCK:**
   SHIFTING DIFF. LOCK POSITION

(a) Turn the ignition switch to ON position.

(b) Push the differential lock control switch to ON position and lock the rear differential.
Rotating the tires, check they are in the differential lock condition.

(d) Disconnect the cable from the negative terminal of the battery.
INSTALLATION HINT (w/Diff. lock):
After installation, check that the breather plug at the end of the breather tube (inside of the LH frame) is not damaged or worn.

2. **DRAIN DIFFERENTIAL OIL**
3. **REMOVE REAR AXLE SHAFTS**
   (See page SA–91)
4. **DISCONNECT REAR PROPELLER SHAFT**
   (See page PR–6)
5. **w/DIFF. LOCK:**
   DISCONNECT CONNECTORS AND TUBE
   INSTALLATION HINT:
   - When connecting the tube of the harness side to the hose of the actuator side, its depth of insertion is 15 mm (0.59 in.).
   - Take care that water or equivalent dose not adhere to the connector and hose.

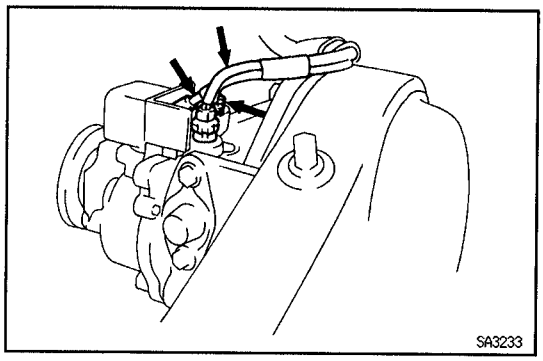
SA3233

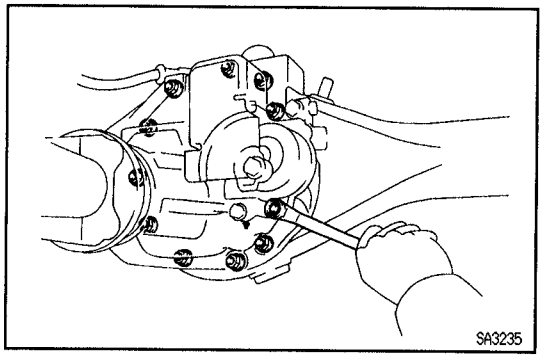
SA3235

6. **REMOVE DIFFERENTIAL CARRIER ASSEMBLY**

(a) Remove the nuts, washers and differential carrier assembly.
NOTICE: Be careful not to damage the installation surface.
3RZ–FE, 5VZ–FE w/o Diff. lock:
Torque: 73 N·m (740 kgf·cm, 54 ft·lbf)
Others:
Torque: 25 N·m (250 kgf·cm, 18 ft·lbf)

(b) Remove the gasket.
INSTALLATION HINT (w/Diff. lock):
- Before installation, check differential lock operation connect the connecter of the actuator to the connecter of the vehicle side.
- Before installation, check that the sleeves on work with switching over the differential lock control switch.
  After checking, lock the rear differential.

SA

SA288-01

DIFFERENTIAL INSTALLATION

Installation is in the reverse order of removal.

HINT:

- After installation, fill the differential with gear oil. (See page SA–105)
- w/Diff. lock:
  After installation, Check the diff. lock operation. (See page SA–151)

DIFFERENTIAL CARRIER (2RZ–FE)

SA05M-03

COMPONENTS

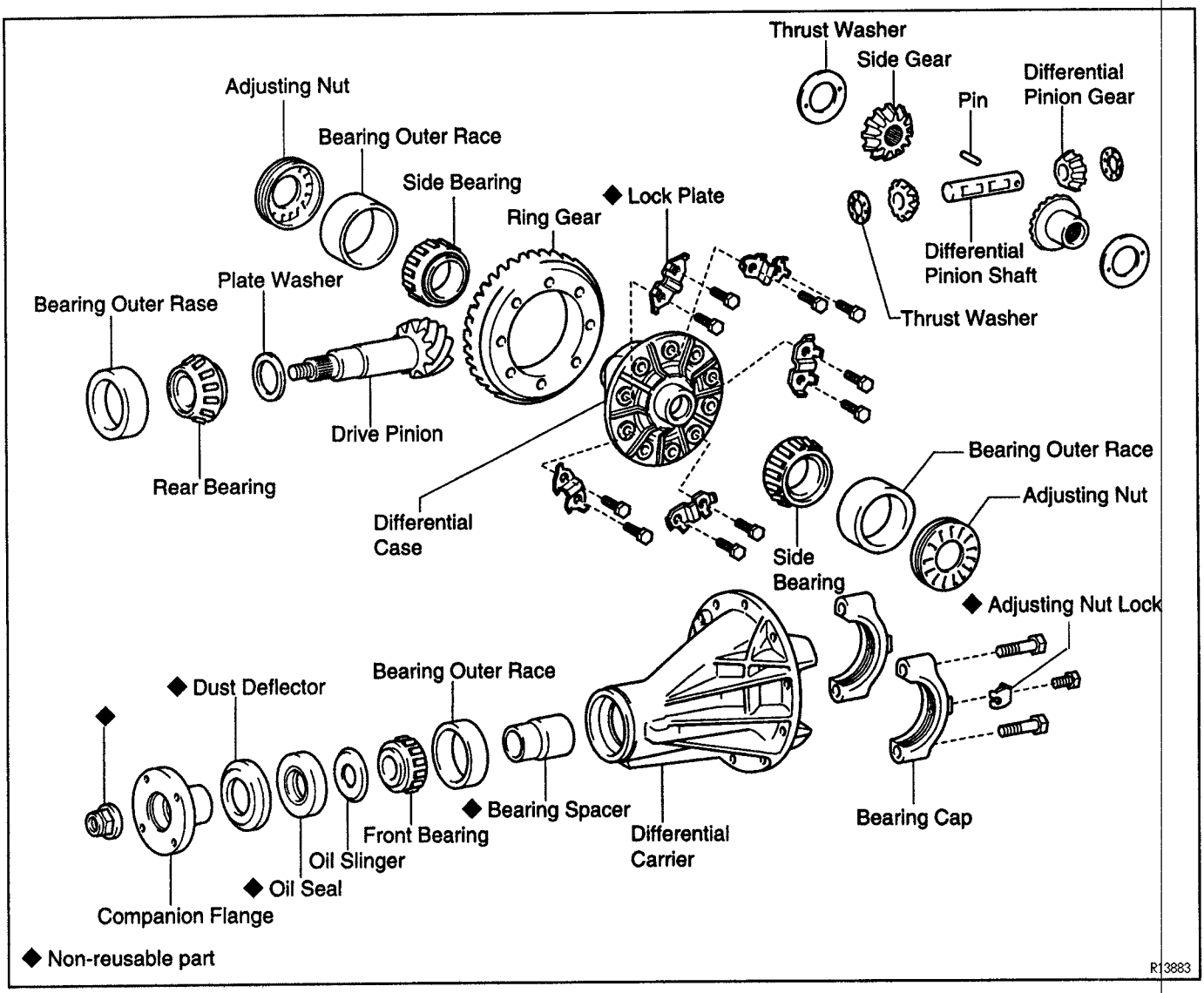

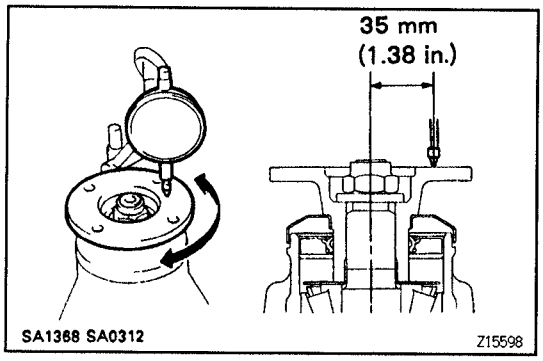

DIFFERENTIAL CARRIER INSPECTION

SA1L8–03

1. CHECK RUNOUT OF COMPANION FLANGE

Using a dial indicator, measure the vertical and lateral runout of the companion flange.

Maximum vertical runout:

0.10 mm (0.0039 in.)

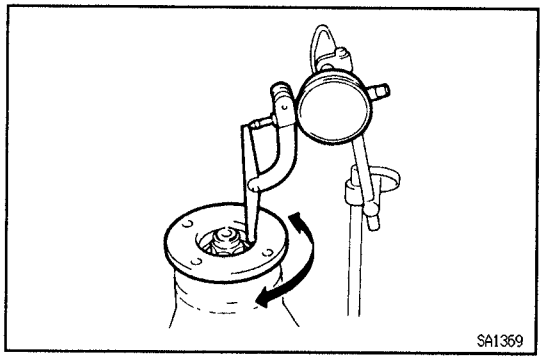

Maximum lateral runout:

0.10 mm (0.0039 in.)

If the runout is not within the specification, replace the companion flange.

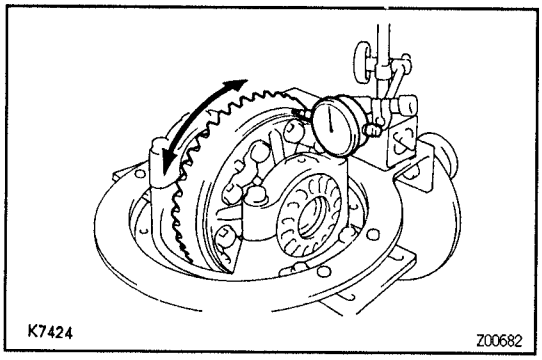

2. CHECK RING GEAR RUNOUT

Using a dial indicator, measure the ring gear runout.

Maximum runout:

0.07 mm (0.0028 in.)

If the runout is not within the specification, replace the ring gear.

SA

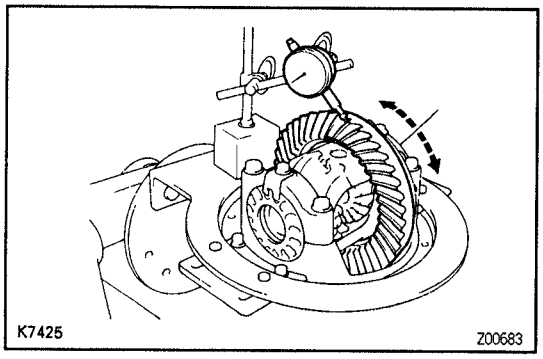

3. CHECK RING GEAR BACKLASH

Using a dial indicator, measure the ring gear backlash.

Backlash:

0.13–0.18 mm (0.0051–0.0071 in.)

If the backlash is not within the specification, adjust the side bearing preload or repair as necessary.

4. MEASURE DRIVE PINION PRELOAD

Using a torque wrench, measure the drive pinion preload using the backlash of the drive pinion and ring gear.

Preload (at starting):

0.6–1.0 N·m (6–10 kgf·cm, 5.2–8.7 in.·lbf)

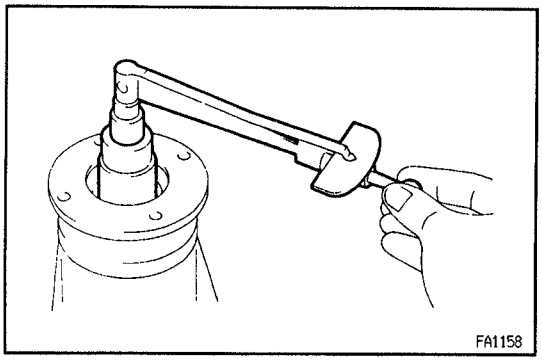

5. CHECK TOTAL PRELOAD

Using a torque wrench, measure the preload with the teeth of the drive pinion and ring gear in contact.

Total preload (at starting):

In addition to drive pinion preload

0.4–0.6 N·m (4–6 kgf·cm, 3.5–5.2 in.·lbf)

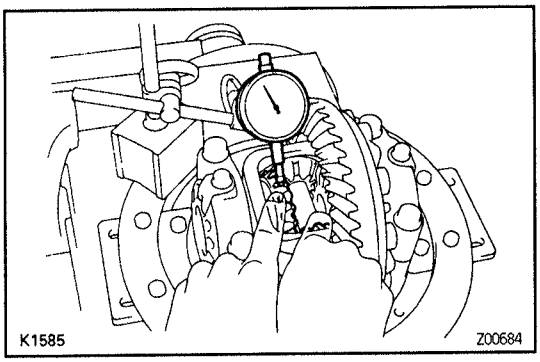

If necessary, disassemble and inspect a differential.

6. CHECK SIDE GEAR BACKLASH

Measure the side gear backlash while holding one pinion gear toward the case.

Standard backlash:

0.05–0.20 mm (0.0020–0.0079 in.)

If the backlash is not within the specification, install the correct thrust washers.

(See page SA–113)

7. CHECK TOOTH CONTACT BETWEEN RING GEAR AND DRIVE PINION

(See page SA–117)

DIFFERENTIAL CARRIER DISASSEMBLY SA28C-01

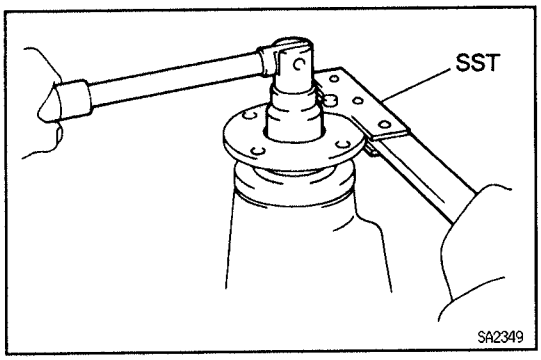

1. REMOVE COMPANION FLANGE

(a) Using a chisel and a hammer, unstake the nut.

(b) Using SST to hold the flange, remove the nut.
SST 09330–00021

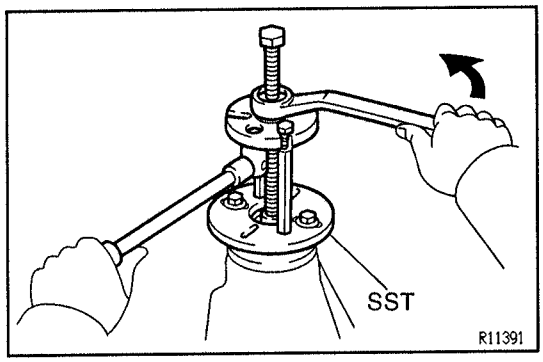

(c) Using SST, remove the companion flange.
SST 09950–30010 (09951–03010, 09953–03010, 09954–03010, 09955–03030, 09956–03020)

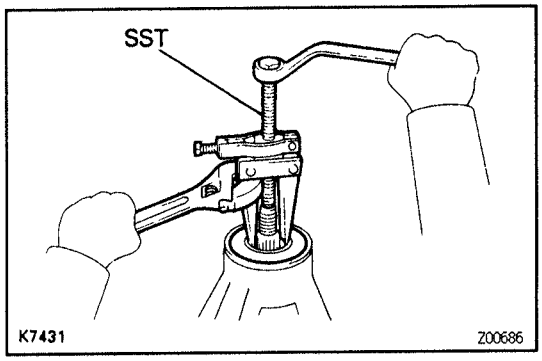

2. REMOVE FRONT OIL SEAL AND OIL SLINGER

(a) Using SST, remove the oil seal from the differential carrier.
SST 09308–10010

(b) Remove the oil slinger.

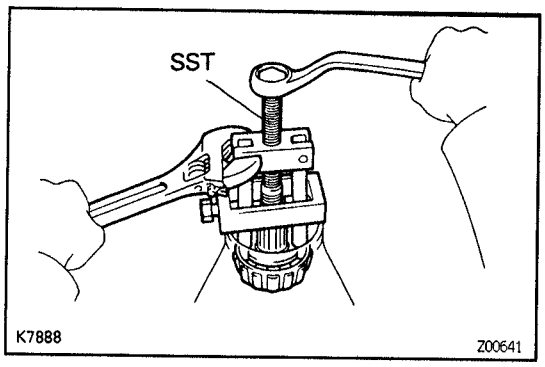

3. REMOVE FRONT BEARING AND BEARING SPACER

(a) Using SST, remove the bearing from the drive pinion.
SST 09556–22010

(b) Remove the bearing spacer.

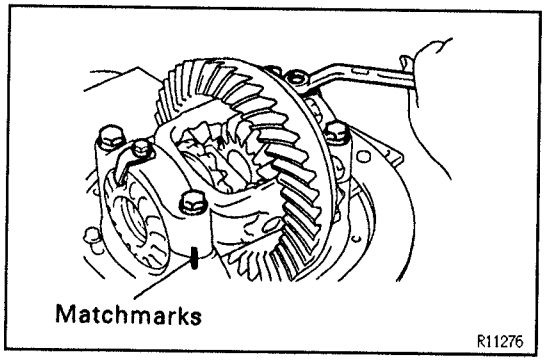

4. REMOVE DIFFERENTIAL CASE

(a) Place matchmarks on the bearing cap and differential carrier.

(b) Remove the 2 adjusting nut locks.

(c) Remove the 4 bolts and 2 bearing caps.

(d) Remove the 2 adjusting nuts.

(e) Remove the differential case with the side bearing outer races from the differential carrier.
HINT: Tag the disassembled parts to show the location for reassembly.

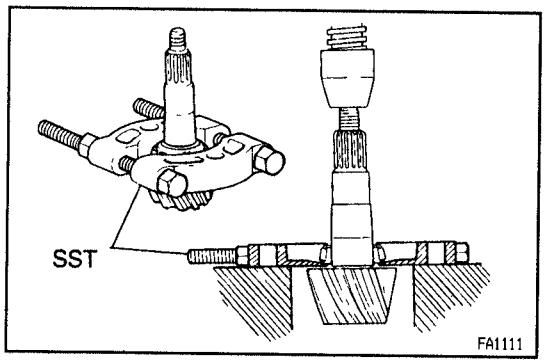

5. REMOVE DRIVE PINION

Remove the drive pinion with the rear bearing.

6. REMOVE DRIVE PINION REAR BEARING

(a) Using SST and a press, remove the bearing from the drive pinion.
SST 09950–00020
HINT: If the drive pinion or ring gear are damaged, replace them as a set.

(b) Remove the plate washer from the drive pinion.

SA

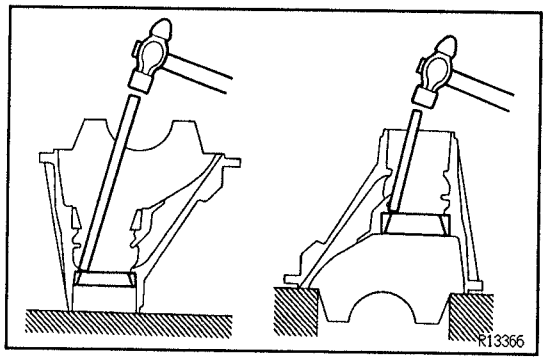

7. REMOVE FRONT AND REAR BEARING OUTER RACE

Using a brass bar and a hammer, remove the outer races from the carrier.

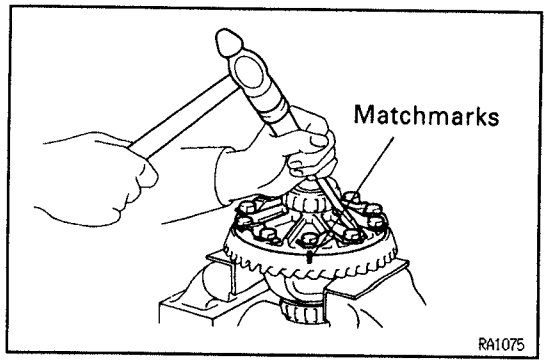

8. REMOVE RING GEAR

(a) Place matchmarks on the ring gear and differential case.

(b) Using a screwdriver and a hammer, unstake the lock plates.

(c) Remove the 10 bolts and 5 lock plates.

(d) Using a plastic hammer, tap on the ring gear to separate it from the differential case.

9. CHECK DIFFERENTIAL CASE RUNOUT

(a) Place the bearing outer races on their respective bearings. Check that the left and right outer races are not interchanged.

(b) Install the differential case in the differential carrier.

(c) When there is not play left in the side bearings, install the plate washers.

(d) Align the matchmarks on the bearing cap and differential carrier.

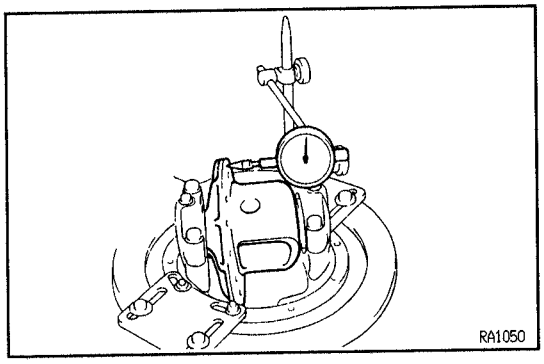

(e) Install and uniformly tighten the 4 bearing cap bolts in several passes.

(f) Using a dial indicator, measure the differential case runout.

Maximum runout:

0.07 mm (0.0028 in.)

(g) Remove the differential case.

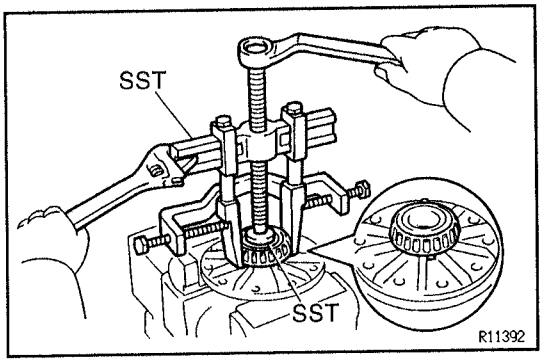

10. REMOVE SIDE BEARINGS

Using SST, remove the side bearing from the differential case.

SST 09950–40010 (09951–04010, 09952–04010, 09953–04020, 09954–04010, 09955–04060, 09957–04010, 09958–04010), 09950–60010 (09951–00450)

HINT: Fix the claws of SST to the notch in the differential case.

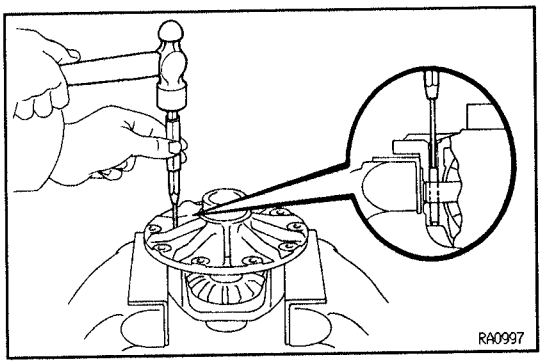

11. DISASSEMBLE DIFFERENTIAL CASE ASSEMBLY

(a) Using a pin punch and a hammer, remove the straight pin.

(b) Remove these parts:

- Pinion shaft
- Pinion gears
- Pinion gear thrust washers
- Side gears
- Side gear thrust washers

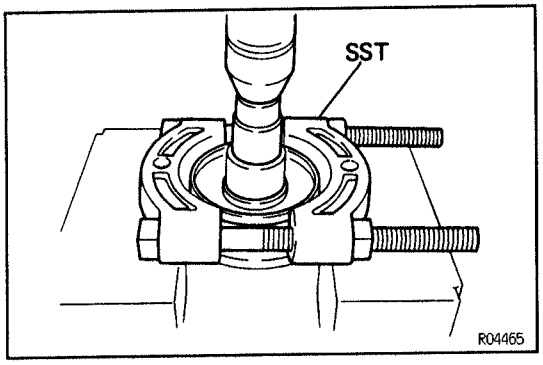

COMPANION FLANGE DUST DEFLECTOR REPLACEMENT

SA1W7-03

1. REMOVE DUST DEFLECTOR

Using SST, a socket and a press, remove the dust deflector.

SST 09950–00020

SA

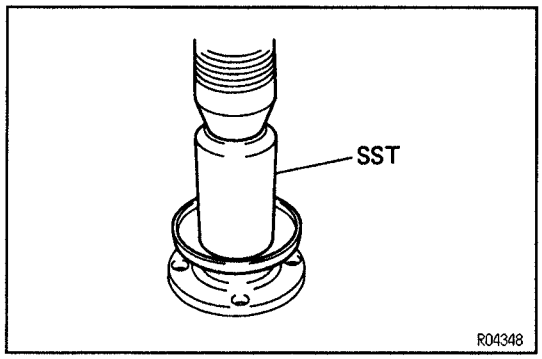

2. INSTALL NEW DUST DEFLECTOR

Using SST and a press, install a new dust deflector.
SST 09636–20010

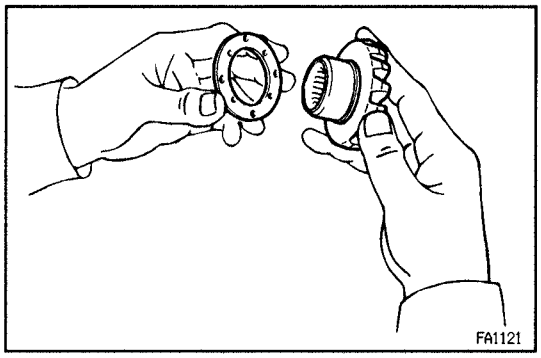

DIFFERENTIAL CARRIER ASSEMBLY

SA28D–01

1. ASSEMBLE DIFFERENTIAL SIDE

(a) Install the proper thrust washers on the side gears.
HINT: Using the table below, select thrust washers which will ensure that the backlash is within the specification.
Washer thickness

Thickness	Thickness
1.0 mm (0.039 in.)	1.2 mm (0.047 in.)
1.1 mm (0.043 in.)	1.3 mm (0.051 in.)

(b) Install the side gears, pinion gears, pinion gear thrust washers and pinion shaft in the differential case.
HINT: Align the holes of the differential case and pinion shaft.

SA

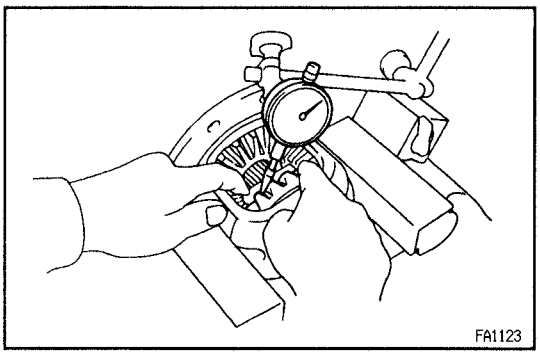

(c) Measure the side gear backlash while holding one pinion gear toward the differential case.
Backlash:
0.05–0.20 mm (0.0020–0.0079 in.)
If the backlash is not within the specification, select an appropriate thickness for the side gear thrust washer.

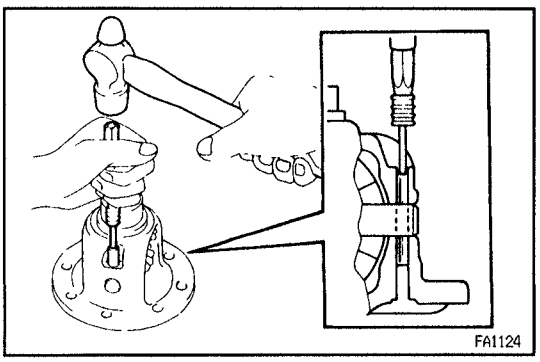

(d) Using a pin punch and a hammer, install the straight pin through the differential case and hole of the pinion shaft.
(e) Using a chisel and a hammer, stake the outside of the differential case pin hole.

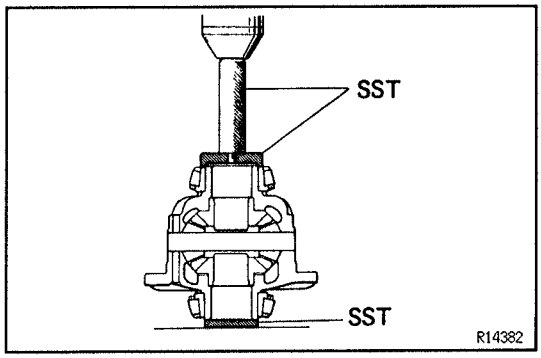

2. INSTALL SIDE BEARINGS

Using SST and a press, install the bearing into the differential case.

SST 09550–10012 (09252–10010, 09557–10010), 09950–60010 (09951–00450)

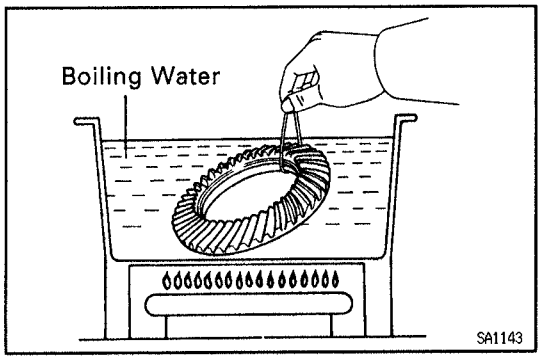

3. INSTALL RING GEAR ON DIFFERENTIAL CASE

(a) Clean the contact surfaces of the differential case and ring gear.

(b) Heat the ring gear to about 100°C (212°F) in boiling water.

(c) Carefully remove the ring gear from the water.

(d) After the moisture on the ring gear has completely evaporated, quickly install the ring gear to the differential case.

(e) Align the matchmarks on the ring gear and the differential case.

(f) Temporarily install 5 new lock plates and the 10 bolts so that the bolt holes in the ring gear and differential case are not misaligned.

(g) After the ring gear has cooled sufficiently, torque the ring gear set bolts.

Torque: 97 N·m (985 kgf·cm, 71 ft·lbf)

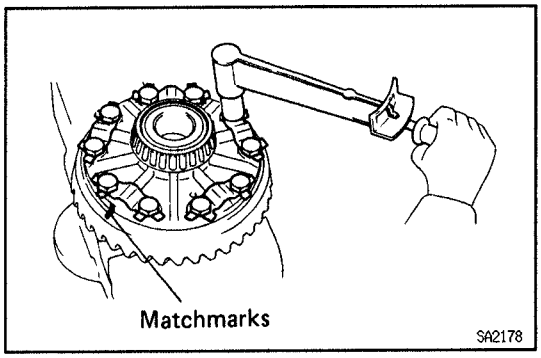

SA

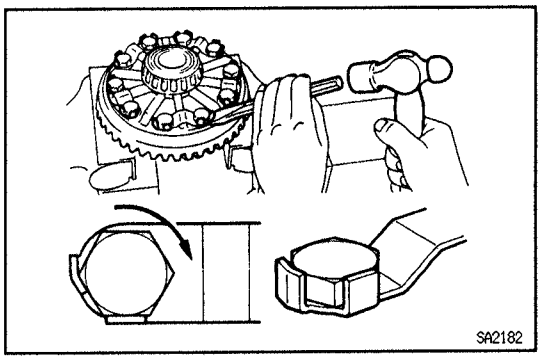

(h) Using a drift punch and a hammer, stake the lock plates.

HINT: Stake 1 claw flush with the flat surface of the bolt. For the claw contacting the protruding portion of the bolt, stake the half on the tightening side.

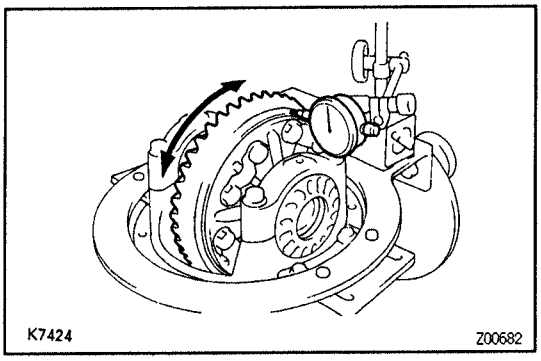

4. CHECK RING GEAR RUNOUT

(a) Install the differential case in the differential carrier and tighten the adjusting nut just to where there is no play in the bearing. (See page SA–116)

(b) Using a dial indicator, measure the runout of ring gear.

Maximum runout:

0.07 mm (0.0028 in.)

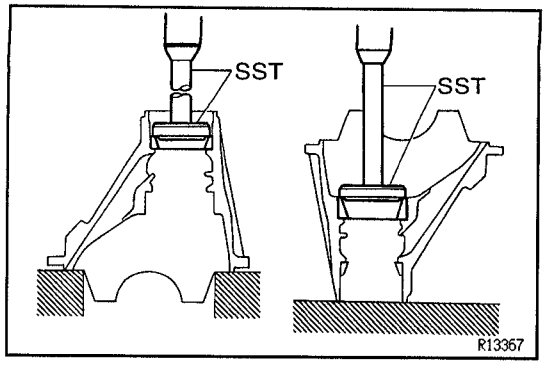

5. INSTALL DRIVE PINION BEARING OUTER RACES

Using SST and a press, install the outer races.
SST 09950–60010 (09951–00710, 09951–00790), 09950–70010 (09951–07150)

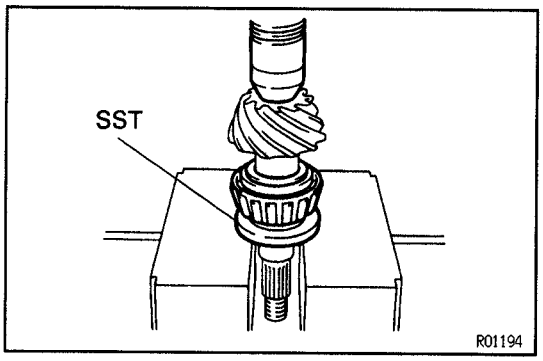

6. INSTALL DRIVE PINION REAR BEARING

(a) Install the plate washer on the drive pinion.
HINT: First fit a washer with the same thickness as the washer which was removed, then after checking the tooth contact pattern, replace the washer with one of a different thickness if necessary.

(b) Using SST and a press, install the rear bearing to the drive pinion.
SST 09506–30012

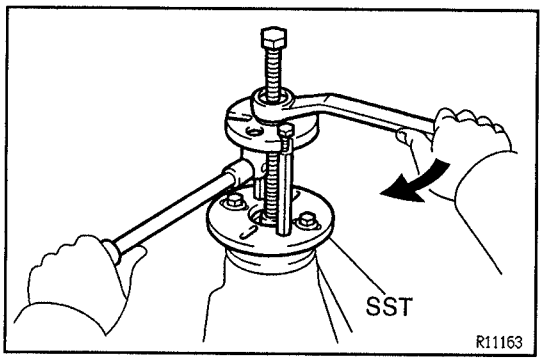

7. TEMPORARILY ADJUST DRIVE PINION PRELOAD

(a) Place the drive pinion and front bearing.
HINT: Assemble the spacer and oil seal after adjusting the tooth contact pattern.

(b) Install the oil slinger.

(c) Using SST, install the companion flange.
SST 09950–30010 (09951–03010, 09953–03010, 09954–03010, 09955–03030, 09956–03020)

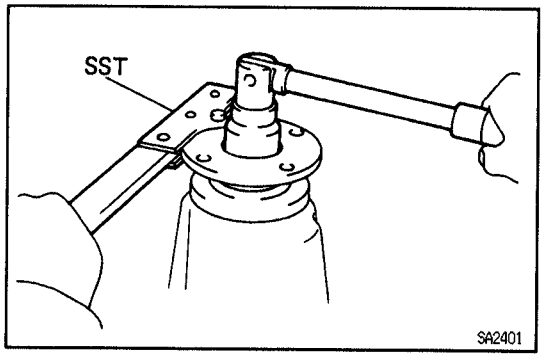

(d) Coat the threads of the nut with hypoid gear oil.

(e) Adjust the drive pinion preload by tighten the companion flange nut.
HINT: Using SST to hold the flange, tighten the nut.
SST 09330–00021
NOTICE: As there is no spacer, tighten the nut a little at a time, being careful not to overtighten it.

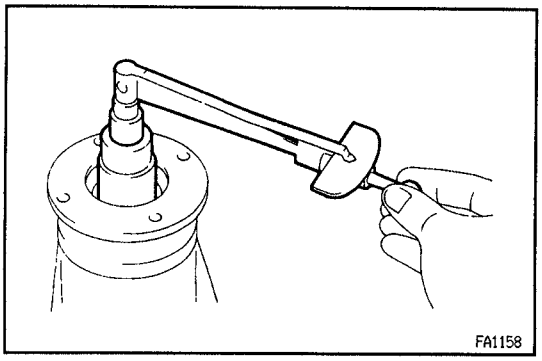

(f) Using a torque wrench, measure the preload.
Preload (at starting):
New bearing
1.4–2.1 N·m (14–21 kgf·cm, 12.2–18.3 in.·lbf)
Reused bearing
0.6–1.0 N·m (6–10 kgf·cm, 5.2–8.7 in.·lbf)

SA

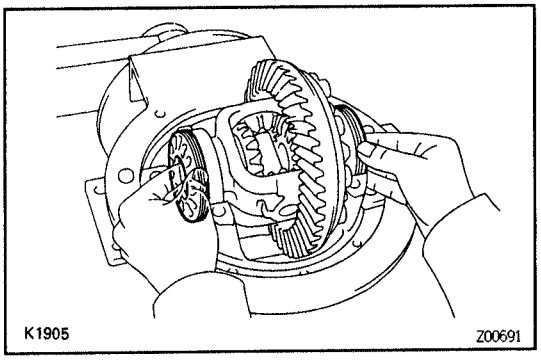

8. INSTALL DIFFERENTIAL CASE IN CARRIER

(a) Place the bearing outer races on their respective bearings. Make sure the left and right outer races are not interchanged.

(b) Install the case in the carrier.
HINT: Make sure that there is a backlash between the ring gear and drive pinion.

9. INSTALL ADJUSTING NUTS

Install the adjusting nuts on the carrier, making sure the nuts are threaded properly.

10. INSTALL BEARING CAPS

Align the matchmarks on the cap and carrier. Screw in the 2 bearing cap bolts 2 or 3 turns and press down the bearing cap by hand.
HINT: If the bearing cap does not fit tightly on the carrier, the adjusting nuts are not threaded properly. Reinstall the adjusting nuts if necessary.

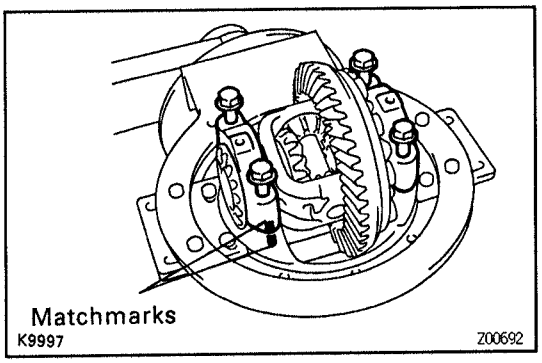

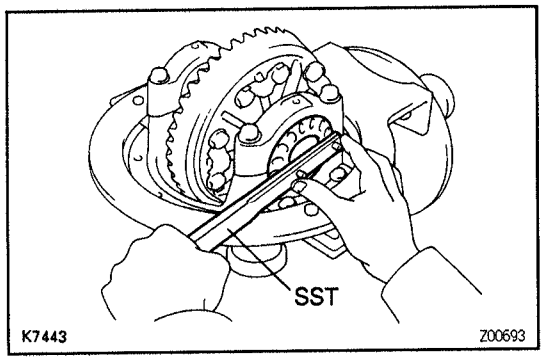

11. ADJUST SIDE BEARING PRELOAD

(a) Tighten the 4 bearing cap bolts to the specified torque, then loosen them to the point where they can be turned by hand.
Torque: 85 N·m (870 kgf·cm, 63 ft·lbf)

(b) Fully tighten the 4 bearing cap bolts by hand.

(c) Using SST, tighten the adjusting nut on the ring gear back side until the ring gear has a backlash of about 0.2 mm (0.008 in.).
SST 09504–00011

(d) While turning the ring gear, use SST to fully tighten the adjusting nut on the ring gear teeth side.
After the bearings are settled, loosen the adjusting nut on the drive pinion side.
SST 09504–00011

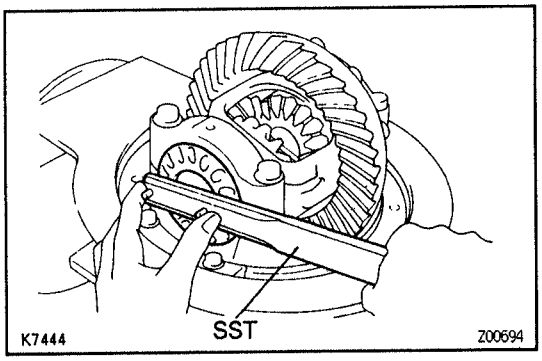

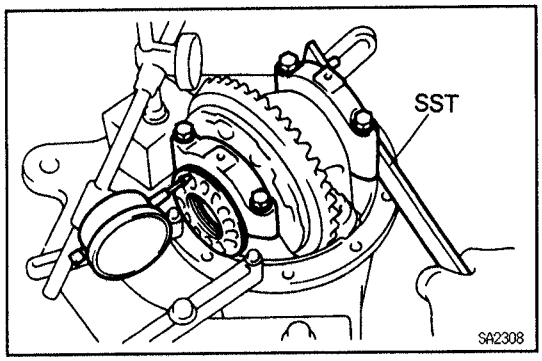

(e) Place a dial indicator on the top of the adjusting nut on the ring gear back side.

(f) Adjust the side bearing for zero preload by tightening the other adjusting nut until the pointer on the indicator begins to move.

(g) Tighten the adjusting nut 1 – 1.5 notches from the zero preload position.

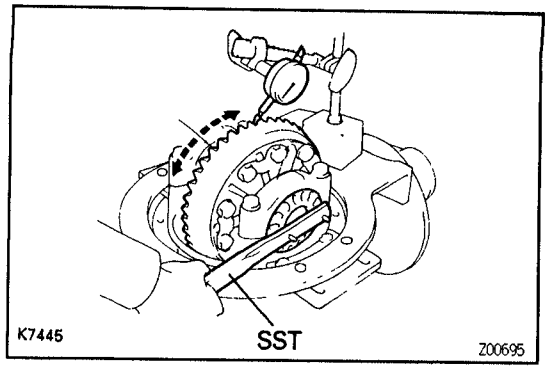

(h) Using a dial indicator, adjust the ring gear backlash until it is within the specification.

Backlash:

0.13–0.18 mm (0.0051–0.0071 in.)

HINT: The backlash is adjusted by turning the left and right adjusting nuts equal amounts. For example, loosen the nut of the left side one notch and tighten the nut on the right side one notch.

(i) Torque the bearing cap bolts.

Torque: 85 N·m (870 kgf·cm, 63 ft·lbf)

(j) Recheck the ring gear backlash.

Backlash:

0.13–0.18 mm (0.0051–0.0071 in.)

(k) Using a torque wrench, measure the preload with the teeth of the drive pinion and ring gear in contact.

Total preload (at starting):

Drive pinion preload plus

0.4–0.6 N·m (4–6 kgf·cm, 3.5–5.2 in.·lbf)

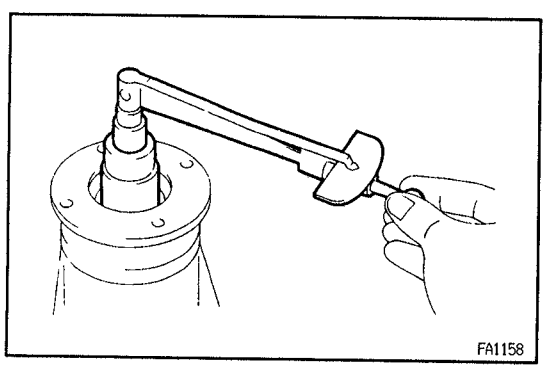

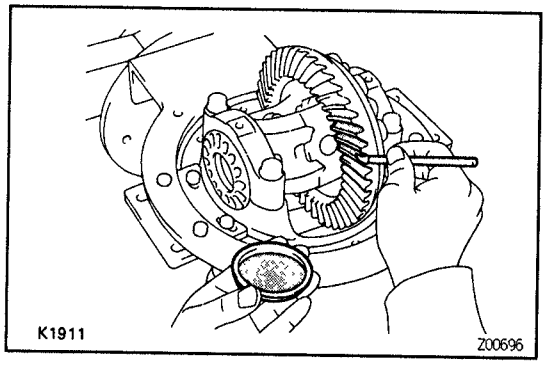

12. INSPECT TOOTH CONTACT BETWEEN RING GEAR AND DRIVE PINION

(a) Coat 3 or 4 teeth at 3 different positions on the ring gear with red lead.

(b) Hold the companion flange firmly and rotate the ring gear in both directions.

(c) Inspect the tooth pattern.

SA

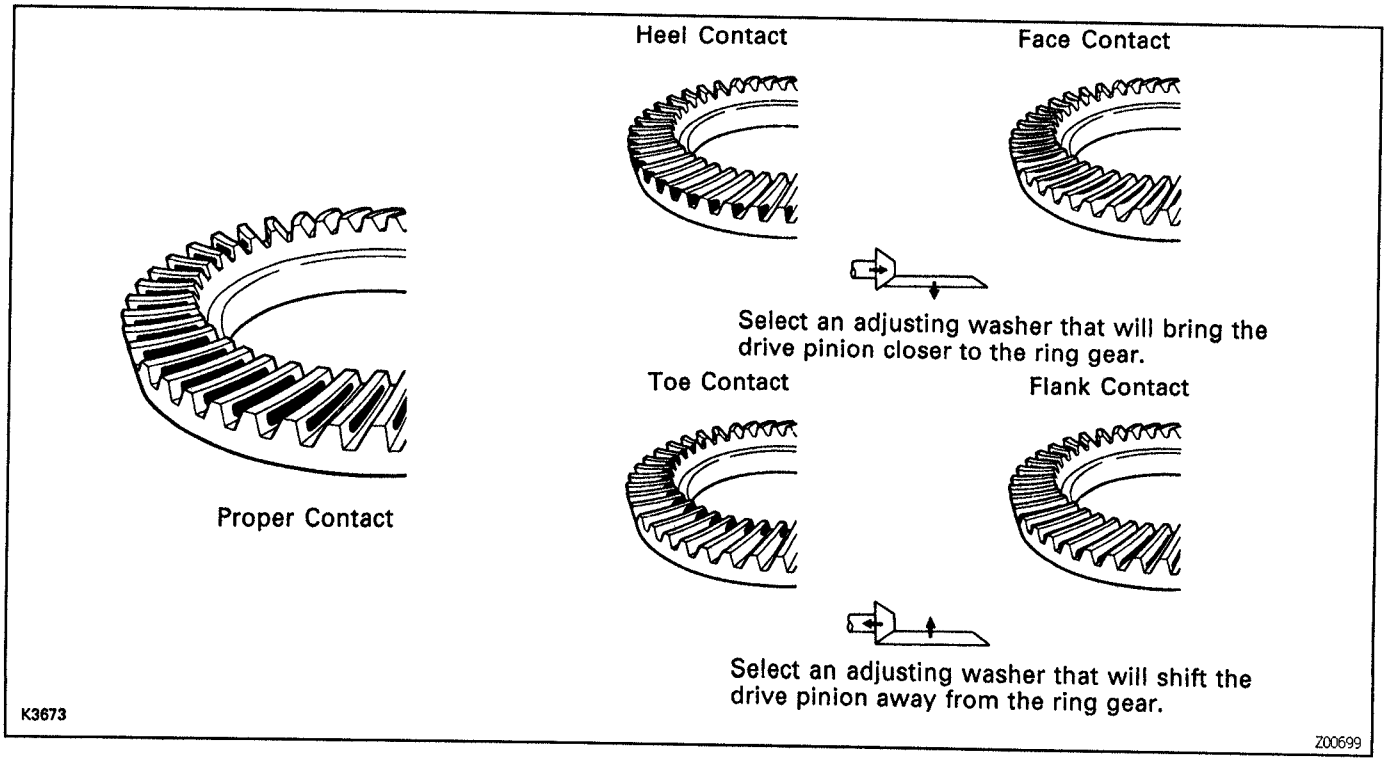

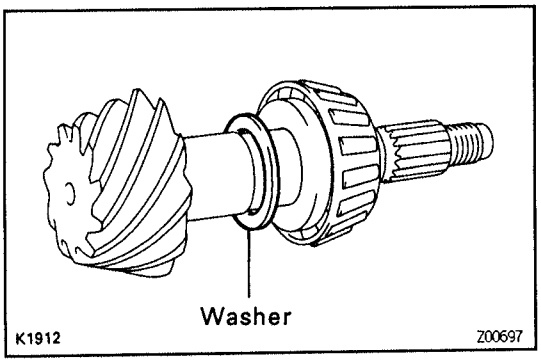

If the teeth are not contacting properly, use the following chart to select a proper washer for correction.

Washer thickness

Thickness mm (in.)	Thickness mm (in.)
2.24 (0.0882)	2.51 (0.0988)
2.27 (0.0894)	2.54 (0.1000)
2.30 (0.0906)	2.57 (0.1012)
2.33 (0.0917)	2.60 (0.1024)
2.36 (0.0929)	2.63 (0.1035)
2.39 (0.0941)	2.66 (0.1047)
2.42 (0.0953)	2.69 (0.1059)
2.45 (0.0965)	2.72 (0.1071)
2.48 (0.0976)	–

13. REMOVE COMPANION FLANGE AND OIL SLINGER
(See page SA–110)

14. REMOVE FRONT BEARING
(See page SA–111)

SA

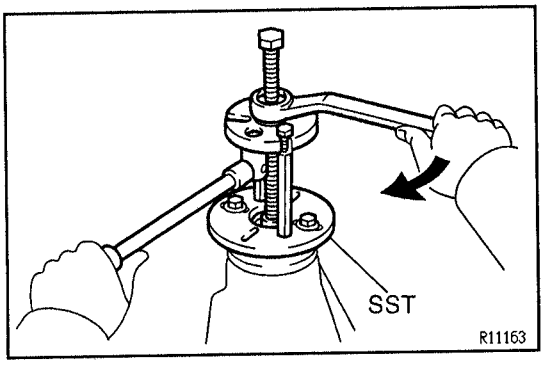

15. INSTALL NEW BEARING SPACER, FRONT BEARING AND OIL SLINGER

(a) Install a new bearing spacer and place the front bearing and oil slinger.

(b) Using SST and the companion flange, install the front bearing then remove the companion flange.
SST 09950–30010 (09951–03010, 09953–03010, 09954–03010, 09955–03030, 09956–03020)

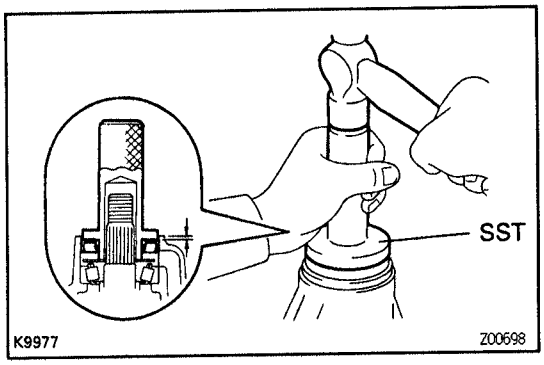

16. INSTALL NEW OIL SEAL

(a) Coat a new oil seal lip with MP grease.

(b) Using SST and a hammer, install the oil seal.
SST 09554–30011
Oil seal drive in depth:
1.5 mm (0.059 in.)

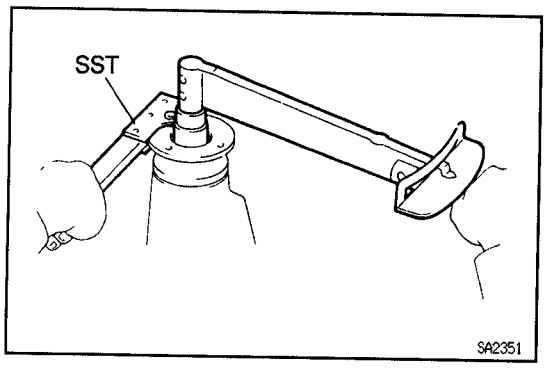

17. INSTALL COMPANION FLANGE

(a) Place the companion flange.

(b) Coat the threads of a new nut with hypoid gear oil.

(c) Using SST to hold the flange, torque the nut.
SST 09330–00021
Torque: 108 N·m (1,100 kgf·cm, 80 ft·lbf)

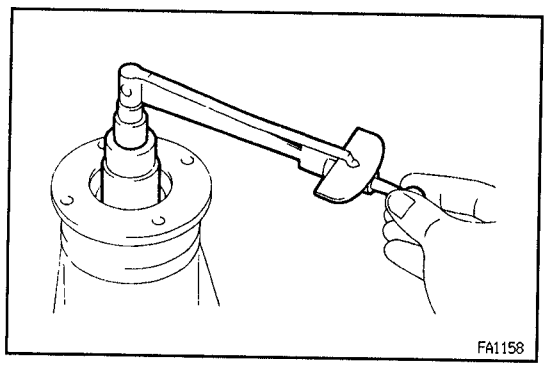

18. ADJUST DRIVE PINION PRELOAD

Using a torque wrench, measure the preload of the backlash between the drive pinon and ring gear.

Preload (at starting):

New bearing

1.4–2.1 N·m (14–21 kgf·cm, 12.2–18.3 in.·lbf)

Reused bearing

0.6–1.0 N·m (6–10 kgf·cm, 5.2–8.7 in.·lbf)

If the preload is greater than the specification, replace the bearing spacer.

If the preload is less than the specification, retighten the nut 13 N·m (130 kgf·cm, 9 ft·lbf) a little at a time until the specified preload is reached.

Maximum torque:

235 N·m (2,400 kgf·cm, 174 ft·lbf)

If the maximum torque is exceeded while retightening the nut, replace the bearing spacer and repeat the preload procedure. Do not back off the pinion nut to reduce the preload.

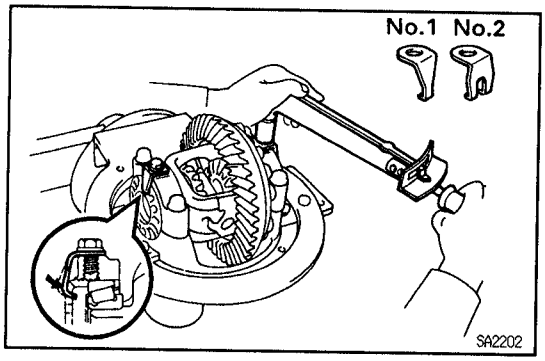

19. CHECK RUNOUT OF COMPANION FLANGE
(See page SA–109)

20. STAKE DRIVE PINION NUT

21. INSTALL ADJUSTING NUT LOCKS

(a) Select either a lock No.1 or No.2, whichever will fit the adjusting nuts.

(b) Install new nut locks on the bearing caps.
Torque: 13 N·m (130 kgf·cm, 9 ft·lbf)

DIFFERENTIAL CARRIER (3RZ–FE, 5VZ–FE w/o Diff. Lock)

SA09D–07

COMPONENTS

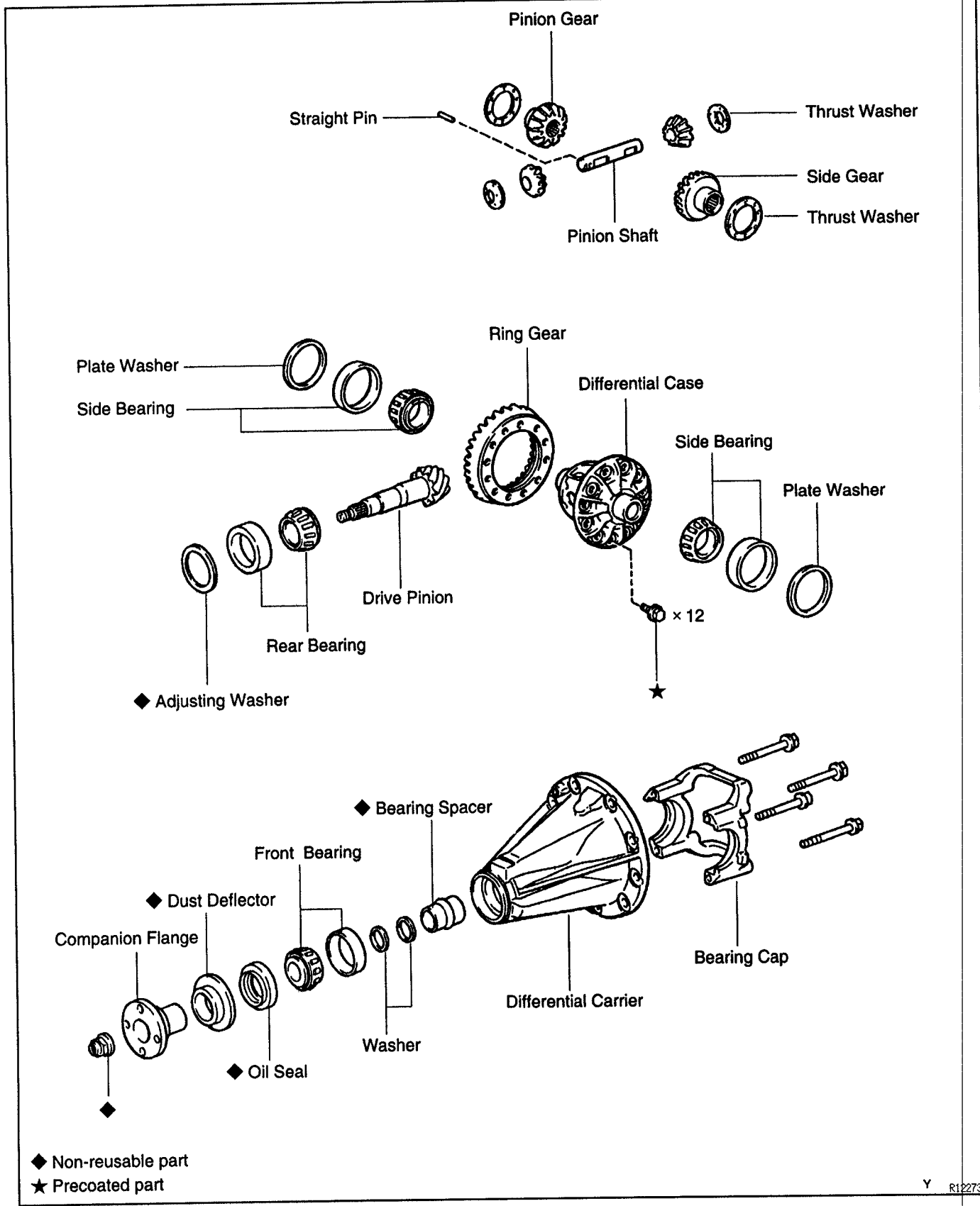

SA

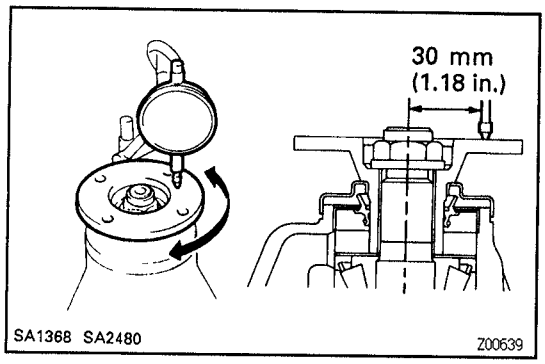

DIFFERENTIAL CARRIER INSPECTION

8A28E–01

1. CHECK RUNOUT OF COMPANION FLANGE

Using a dial indicator, measure the vertical and lateral runout of the companion flange.

Maximum vertical runout:

0.09 mm (0.0035 in.)

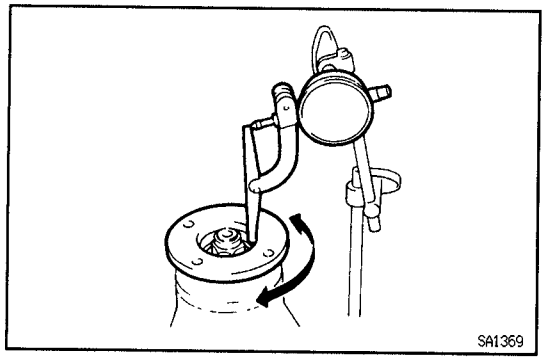

Maximum lateral runout:

0.09 mm (0.0035 in.)

If the runout is not within the specification, replace the companion flange.

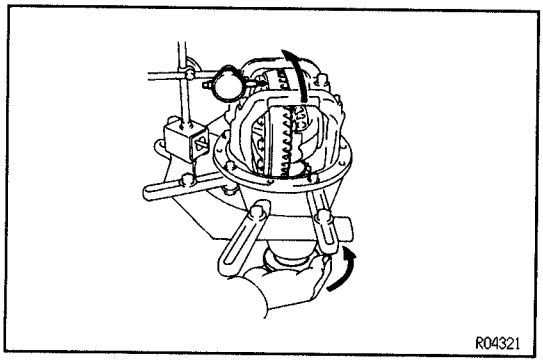

2. CHECK RING GEAR RUNOUT

Using a dial indicator, measure the ring gear runout.

Maximum runout:

0.05 mm (0.0020 in.)

If the runout is not within the specification, replace the ring gear.

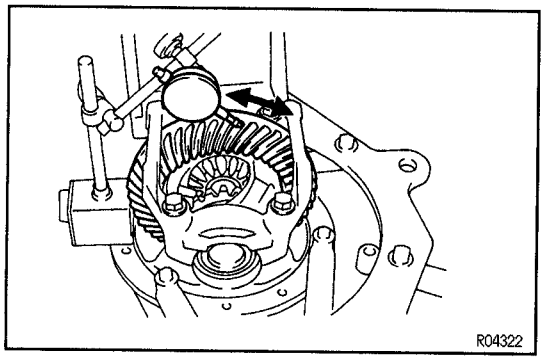

3. CHECK RING GEAR BACKLASH

Using a dial indicator, measure the ring gear backlash.

Backlash:

0.13–0.18 mm (0.0051–0.0071 in.)

If the backlash is not within the specification, adjust the side bearing preload or repair as necessary.

4. CHECK TOOTH CONTACT BETWEEN RING GEAR AND DRIVE PINION

(See page SA–130)

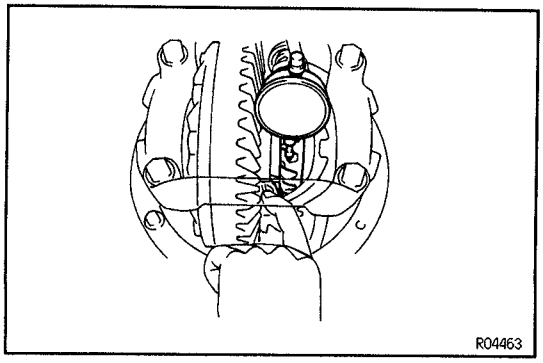

5. CHECK SIDE GEAR BACKLASH

Measure the side gear backlash while holding one pinion gear toward the case.

Backlash:

0.05–0.20 mm (0.0020–0.0079 in.)

SA

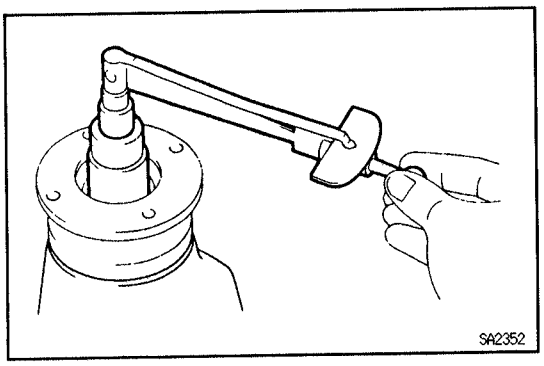

6. CHECK DRIVE PINION PRELOAD

Using a torque wrench, measure the preload of backlash between the drive pinion and ring gear.

Preload (at starting):

0.5–0.8 N·m (5–8 kgf·cm, 4.3–6.9 in.·lbf)

7. CHECK TOTAL PRELOAD

Using a torque wrench, measure the preload with the teeth of the drive pinion and ring gear in contact.

Total preload (at starting):

In addition to drive pinion preload.

0.4–0.6 N·m (4–6 kgf·cm, 3.5–5.2 in.·lbf)

If necessary, disassemble and inspect the differential.

DIFFERENTIAL CARRIER DISASSEMBLY SA187-03

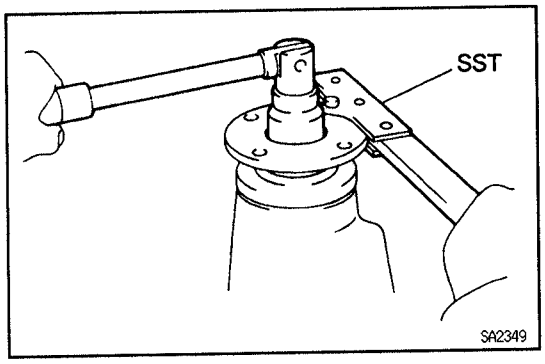

SA

1. REMOVE COMPANION FLANGE

(a) Using a chisel and hammer, unstake the staked part of the nut.

(b) Using SST to hold the flange, remove the nut.
SST 09330–00021

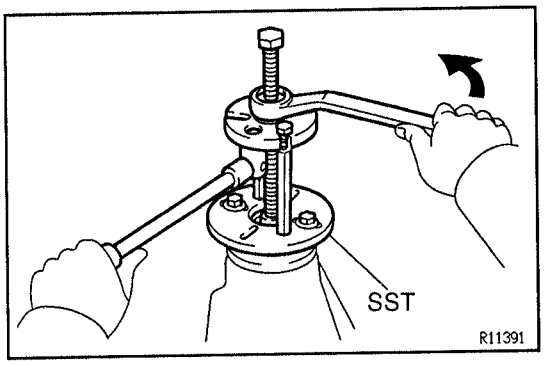

(c) Using SST, remove the companion flange.
SST 09950–30010 (09951–03010, 09953–03010, 09954–03010, 09955–03030, 09956–03050)

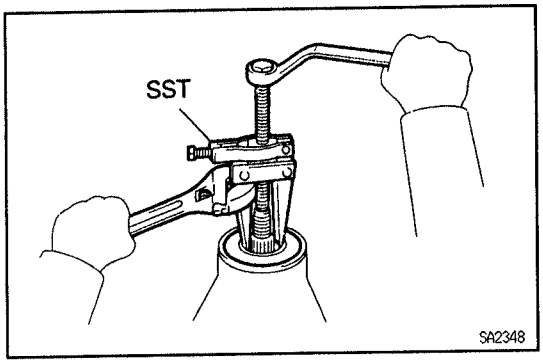

2. REMOVE FRONT OIL SEAL

Using SST, remove the oil seal from the differential carrier.
SST 09308–10010

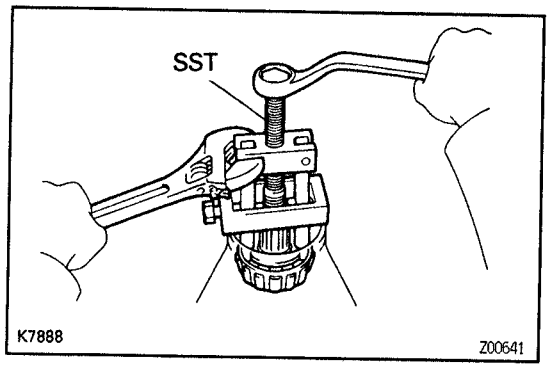

3. REMOVE FRONT BEARING AND BEARING SPACER

(a) Using SST, remove the bearing from the drive pinion.
SST 09556–22010

(b) Remove the 2 washers and bearing spacer.

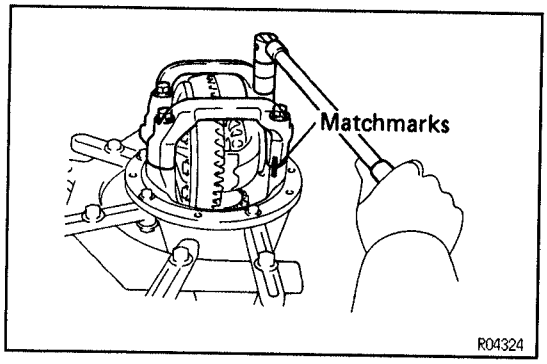

4. REMOVE DIFFERENTIAL CASE

(a) Place matchmarks on the bearing cap and differential carrier.

(b) Remove the 4 bolts and bearing cap.

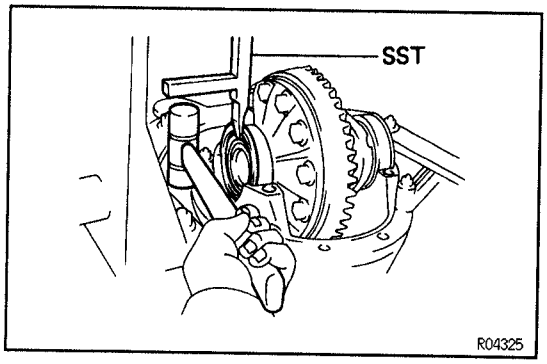

(c) Using SST and a hammer, remove the 2 side bearing plate washers.
SST 09504–22011
HINT: Measure the plate washer and note the thickness.

(d) Remove the differential case and bearing outer race from the carrier.
HINT: Tag the bearing outer races to show the location for reassembly.

SA

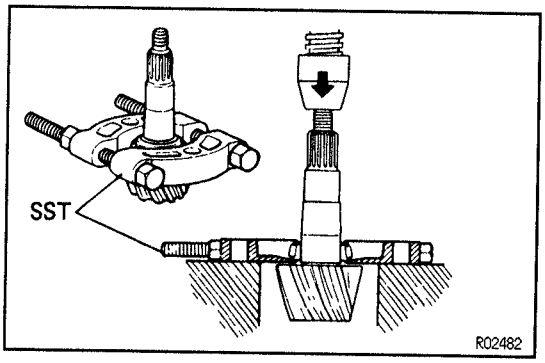

5. REMOVE DRIVE PINION

6. REMOVE DRIVE PINION REAR BEARING

Using SST and a press, remove the bearing from the drive pinion.
SST 09950–00020
HINT: If the drive pinion or ring gear are damaged, replace them as a set.

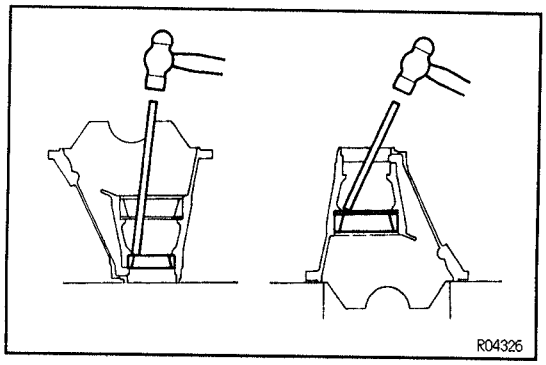

7. REMOVE FRONT AND REAR BEARING OUTER RACES

NOTICE: Do not remove the outer races except when replacing the bearings.

Using a brass bar and a hammer, remove the outer races and adjusting washer from the carrier.
HINT: Measure the adjusting washer and note the thickness.

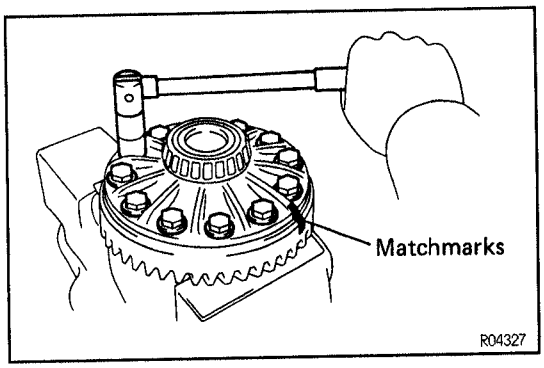

8. REMOVE RING GEAR

(a) Place matchmarks on the ring gear and differential case.

(b) Remove the 12 ring gear set bolts.

(c) Using a plastic hammer, tap on the ring gear to separate it from the differential case.

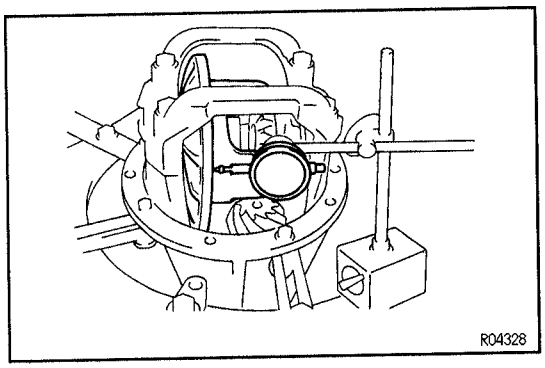

9. CHECK DIFFERENTIAL CASE RUNOUT

(a) Install the differential case in the differential carrier. (See page SA–127)

(b) Using a dial indicator, measure the differential case runout.

Maximum case runout:

0.04 mm (0.0016 in.)

(c) Remove the differential case.

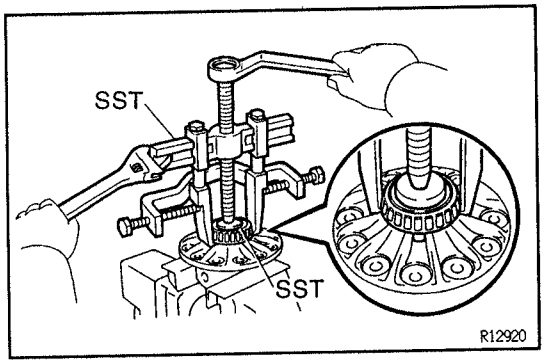

SA

10. REMOVE SIDE BEARINGS

Using SST, remove the side bearings from the differential case.

SST 09950–40010 (09951–04010, 09952–04010, 09953–04020, 09954–04010, 09955–04060, 09957–04010, 09958–04010), 09950–60010 (09951–00480)

HINT: Fix the claws of SST to the notch in the differential case.

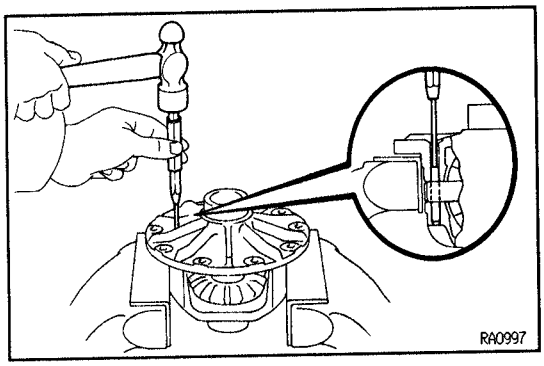

11. DISASSEMBLE DIFFERENTIAL CASE ASSEMBLY

(a) Using a pin punch and a hammer, remove the straight pin.

(b) Remove these parts:

- Pinion shaft
- Pinion gears
- Pinion gear thrust washers
- Side gears
- Side gear thrust washers

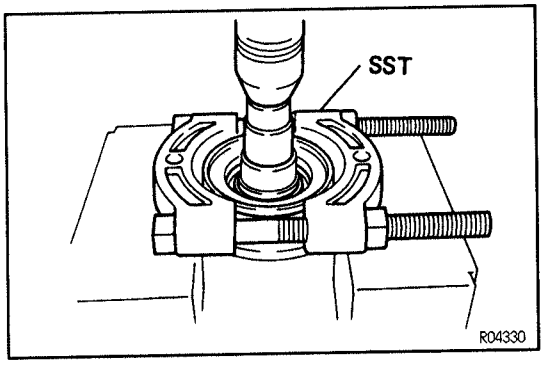

COMPANION FLANGE DUST DEFLECTOR REPLACEMENT

SA0M3-05

1. REMOVE DUST DEFLECTOR

Using SST, a socket wrench and a press, remove the dust deflector.

SST 09950–00020

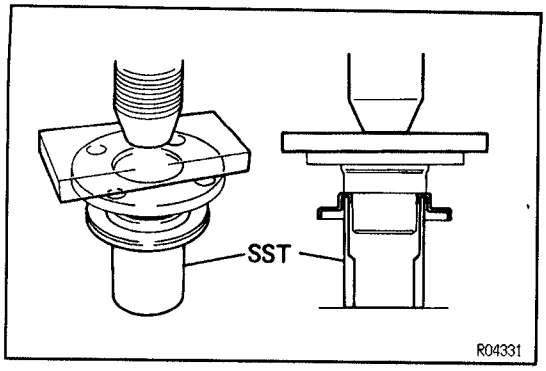

2. INSTALL NEW DUST DEFLECTOR

Using SST and a press, install a new dust deflector.
SST 09523–36010

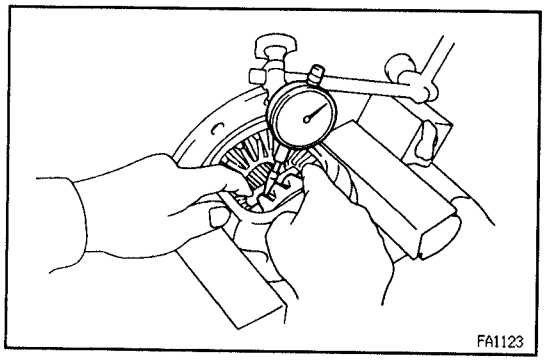

DIFFERENTIAL CARRIER ASSEMBLY

SA28F–01

1. ASSEMBLE DIFFERENTIAL CASE

(a) Install the proper thrust washer to the side gears.
HINT: Using the table below, select thrust washers which will ensure that the backlash is within the specifications.
Washer thickness

Thickness mm (in.)	Thickness mm (in.)
1.50 (0.0590)	1.75 (0.0689)
1.55 (0.0610)	1.80 (0.0709)
1.60 (0.0630)	1.85 (0.0728)
1.65 (0.0650)	1.90 (0.0748)
1.70 (0.0669)	–

(b) Install the side gears with the thrust washers, pinion gears, pinion gear thrust washers and pinion shaft.
HINT: Align the holes of the differential case and pinion shaft.

SA

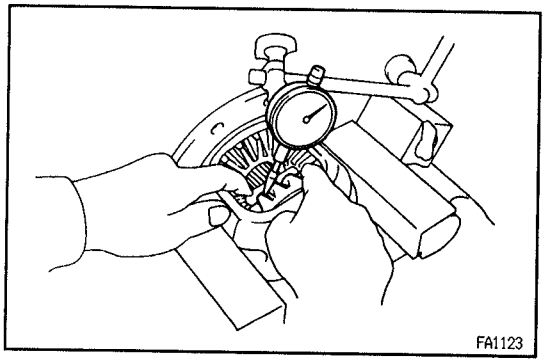

(c) Using a dial indicator, measure the side gear backlash while holding one pinion gear toward the case.
Backlash:
0.05–0.20 mm (0.0020–0.0079 in.)
If the backlash is not within the specification, replace the thrust washers.

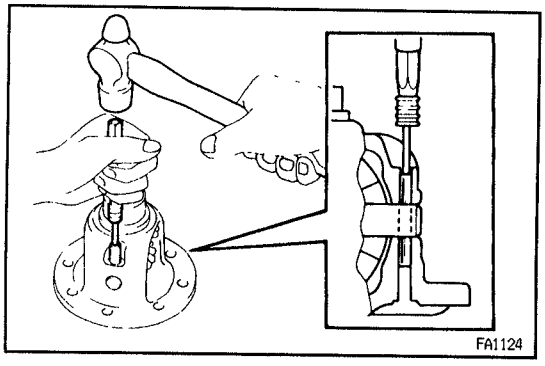

(d) Using a pin punch and hammer, drive in the straight pin through the holes in the differential case and pinion shaft.
(e) Using a chisel and hammer, stake the out side of the differential case pin hole.

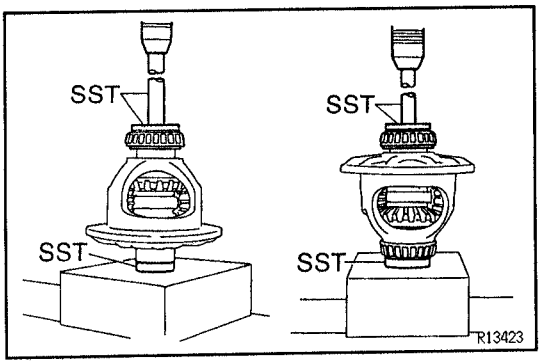

2. INSTALL SIDE BEARINGS

Using SST and a press, install the side bearings into the differential case.

SST 09950–60010 (09951–00480, 09951–00640)
09950–70010 (09951–07150)

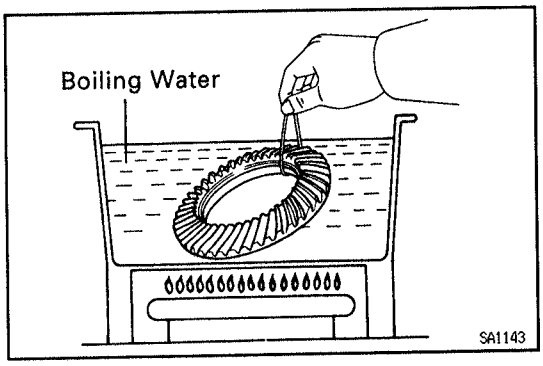

3. INSTALL RING GEAR ON DIFFERENTIAL CASE

(a) Clean the contact surfaces of the differential case and ring gear.

(b) Heat the ring gear to about 100 °C (212 °F) in boiling water.

(c) Carefully remove the ring gear from the water.

(d) After the moisture on the ring gear has completely evaporated, quickly install the ring gear to the differential case.

HINT: Align the matchmarks on the ring gear and differential case.

(e) After the ring gear cools down enough, torque the set bolts to which thread lock has been applied.

Thread lock:

Part No. 08833–00100, THREE BOND 1360K or equivalent.

Torque: 125 N·m (1,270 kgf·cm, 92 ft·lbf)

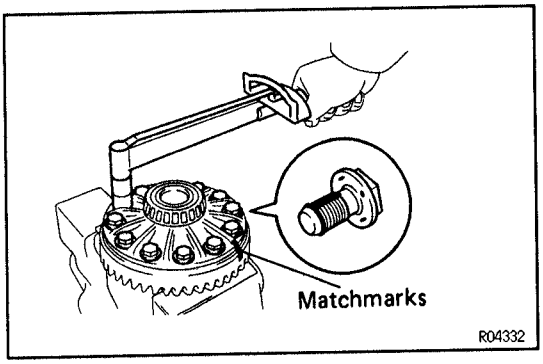

4. INSPECT RING GEAR RUNOUT

(a) Install the differential case into the carrier and install the plate washers to where there is no play in the bearing. (See page SA–127)

(b) Install the bearing cap. (See page SA–129)

(c) Using a dial indicator, measure the runout of ring gear.

Maximum runout:

0.05 mm (0.0020 in.)

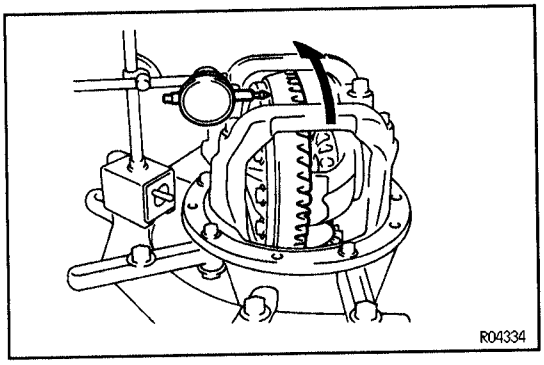

5. INSTALL DRIVE PINION BEARING OUTER RACES AND ADJUSTING WASHER

(a) Using SST and a press, install a new front bearing outer race to the carrier.

SST 09950–60010 (09951–00710),
09950–70010 (09951–07150)

(b) Using SST and a press, install a new adjusting washer and a new rear bearing outer race to the carrier.

SST 09950–60020 (09951–00910),
09950–70010 (09951–07150)

HINT: First fit a washer with the same thickness as the washer which was removed, then after checking the tooth contact pattern, replace the washer with one of a different thickness if necessary.

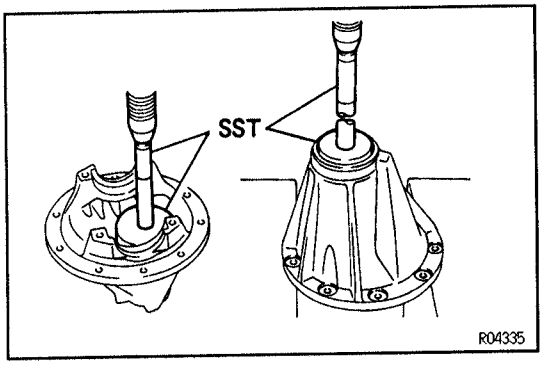

SA

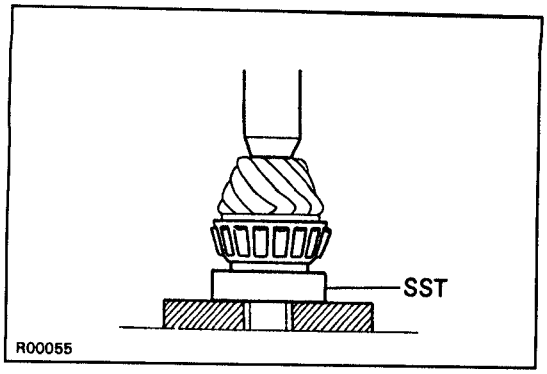

6. INSTALL DRIVE PINION REAR BEARING

Using SST and a press, install the rear bearing onto the drive pinion.
SST 09506–35010

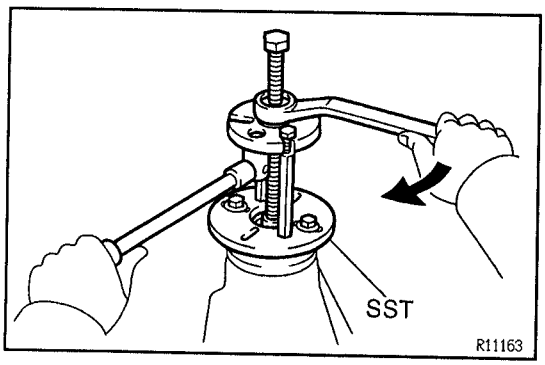

7. TEMPORARILY ADJUST DRIVE PINION PRELOAD

(a) Install the drive pinion and front bearing.
HINT: Assemble the spacer, washers and oil seal after adjusting the gear contact pattern.

(b) Using SST, install the companion flange.
SST 09950–30010 (09951–03010, 09953–03010, 09954–03010, 09955–03030, 09956–03050)

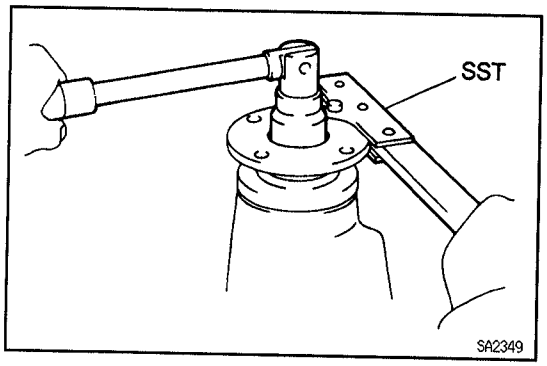

(c) Coat the threads of the nut with hypoid gear oil.

(d) Adjust the drive pinion preload by tightening the companion flange nut.
Using SST to hold the flange, torque the nut.
SST 09330–00021
NOTICE: As there is no spacer, tighten the nut a little at a time, being careful not to overtighten it.

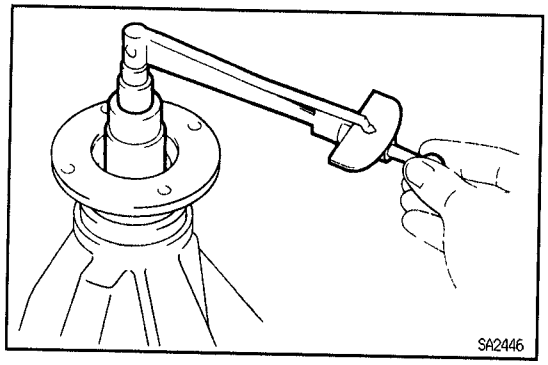

(e) Using a torque wrench, measure the preload.
Preload (at starting):
New bearing
1.0–1.6 N·m (10–16 kgf·cm, 8.7–13.9 in.·lbf)
Reused bearing
0.5–0.8 N·m (5–8 kgf·cm, 4.3–6.9 in.·lbf)

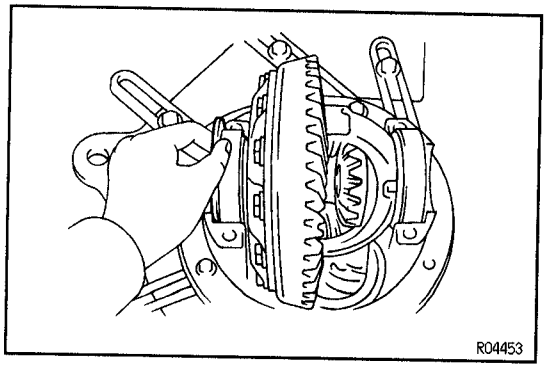

8. INSTALL DIFFERENTIAL CASE IN CARRIER

(a) Place the bearing outer races on their respective bearings. Make sure the left and right races are not interchanged.

(b) Install the differential case in the carrier.

9. ADJUST RING GEAR BACKLASH

(a) Only install the plate washer on the ring gear back side.
HINT: Ensure that the ring gear has a backlash.

SA

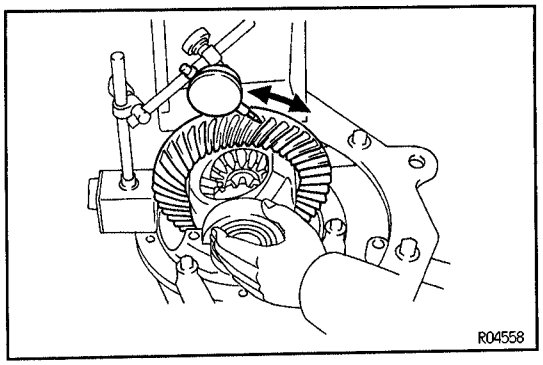

(b) Using a plastic hammer, snug down the washer and bearing by tapping the ring gear.

(c) Hold the side bearing boss on the teeth surface of the ring gear and measure the backlash.

Backlash (reference):

0.13–0.18 mm (0.0051–0.0071 in.)

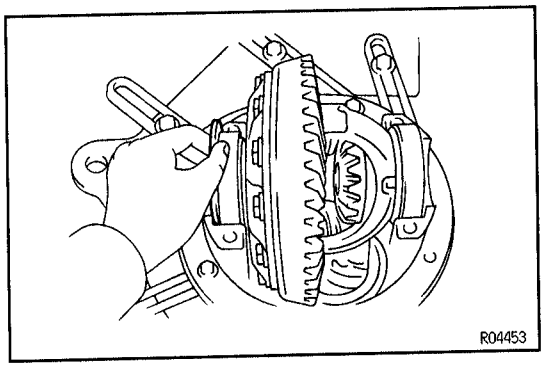

(d) Select a ring gear back side plate washer, using the backlash as reference. (See page SA–129)

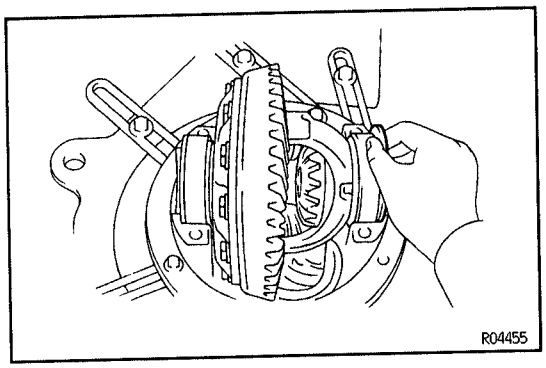

(e) Select a ring gear teeth side plate washer of a thickness which eliminates any clearance between the outer race and case.

SA

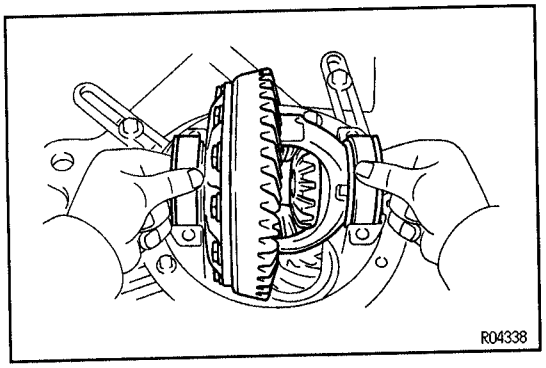

(f) Remove the plate washers and differential case.

(g) Install the plate washer into the ring gear back side of the carrier.

(h) Place the other plate washer onto the differential case together with the outer race, and install the differential case with the outer race into the carrier.

(i) Using a plastic hammer, snug down the washer and bearing by tapping the ring gear.

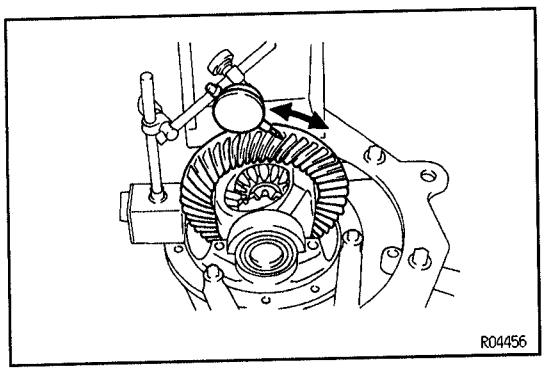

(j) Using a dial indicator, measure the ring gear backlash.

Backlash:

0.13–0.18 mm (0.0051–0.0071 in.)

(k) If the backlash is not within the specification, adjust by either increasing or decreasing the number of washers on both sides by an equal amount.

HINT: There should be no clearance between the plate washer and case.

Ensure that there is ring gear backlash.

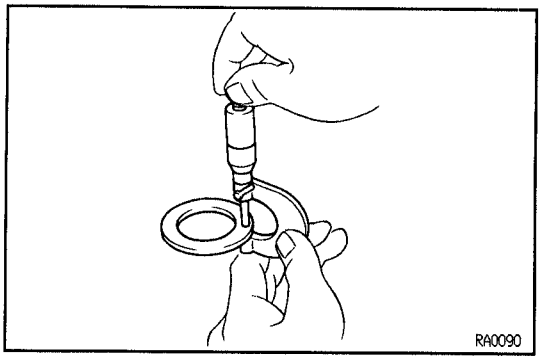

10. ADJUST SIDE BEARING PRELOAD

(a) After adjustment with the backlash as reference, remove the ring gear teeth side plate washer and measure the thickness.

(b) Install a new washer of 0.06–0.09 mm (0.0024–0.0035 in.) thicker than the washer removed.
HINT: Select a washer which can be pressed in 2/3 of the way by finger.

(c) Using a plastic hammer, install the plate washer.

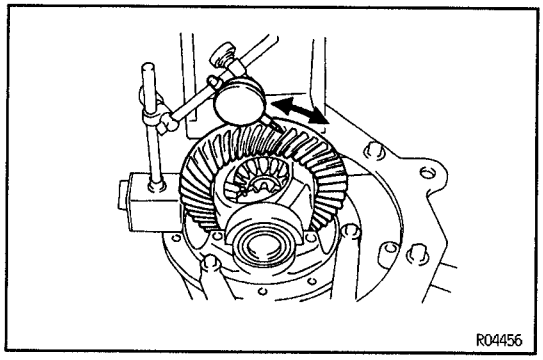

(d) Recheck the ring gear backlash.
Backlash:
0.13–0.18 mm (0.0051–0.0071 in.)

(e) If the backlash is not within the specification, adjust by either increasing or decreasing the washers on both sides by equal amounts.
HINT: The backlash will change about 0.20 mm (0.0079 in.) with 0.03 mm (0.0012 in.) alteration of the side washer.
Washer thickness

Mark	Thickness mm (in.)	Mark	Thickness mm (in.)	Mark	Thickness mm (in.)
58	2.58 (0.1015)	90	2.90 (0.1142)	22	3.22 (0.1268)
60	2.60 (0.1024)	92	2.92 (0.1150)	24	3.24 (0.1276)
62	2.62 (0.1031)	94	2.94 (0.1157)	26	3.26 (0.1283)
64	2.64 (0.1039)	96	2.96 (0.1165)	28	3.28 (0.1291)
66	2.66 (0.1047)	98	2.98 (0.1173)	30	3.30 (0.1299)
68	2.68 (0.1055)	00	3.00 (0.1181)	32	3.32 (0.1307)
70	2.70 (0.1063)	02	3.02 (0.1189)	34	3.34 (0.1315)
72	2.72 (0.1071)	04	3.04 (0.1197)	36	3.36 (0.1323)
74	2.74 (0.1079)	06	3.06 (0.1205)	38	3.38 (0.1331)
76	2.76 (0.1087)	08	3.08 (0.1213)	40	3.40 (0.1339)
78	2.78 (0.1094)	10	3.10 (0.1220)	42	3.42 (0.1346)
80	2.80 (0.1102)	12	3.12 (0.1228)	44	3.44 (0.1354)
82	2.82 (0.1110)	14	3.14 (0.1236)	46	3.46 (0.1362)
84	2.84 (0.1118)	16	3.16 (0.1244)	48	3.48 (0.1370)
86	2.86 (0.1126)	18	3.18 (0.1252)	–	–
88	2.88 (0.1134)	20	3.20 (0.1260)	–	–

11. INSTALL SIDE BEARING CAP

(a) Align the matchmarks on the cap and carrier.

(b) Torque the 4 bolts.
Torque: 113 N·m (1,150 kgf·cm, 83 ft·lbf)

12. MEASURE TOTAL PRELOAD

Using a torque wrench, measure the preload with the teeth of the drive pinion and ring gear in contact.

Total preload (at starting):

In addition to drive pinion preload

0.4—0.6 N·m (4—6 kgf·cm, 3.5—5.2 in.·lbf)

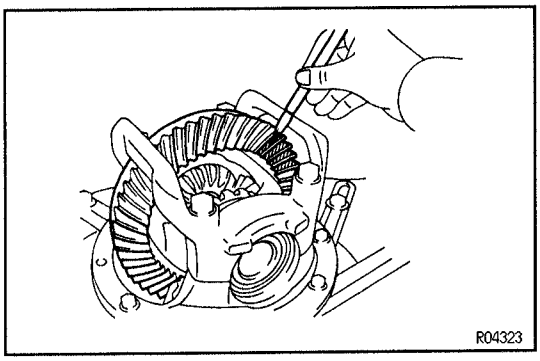

13. INSPECT TOOTH CONTACT BETWEEN RING GEAR AND DRIVE PINION

(a) Coat 3 or 4 teeth at three different position on the ring gear with red lead.

(b) Hold the companion flange firmly and rotate the ring gear in both directions.

(c) Inspect the teeth pattern.

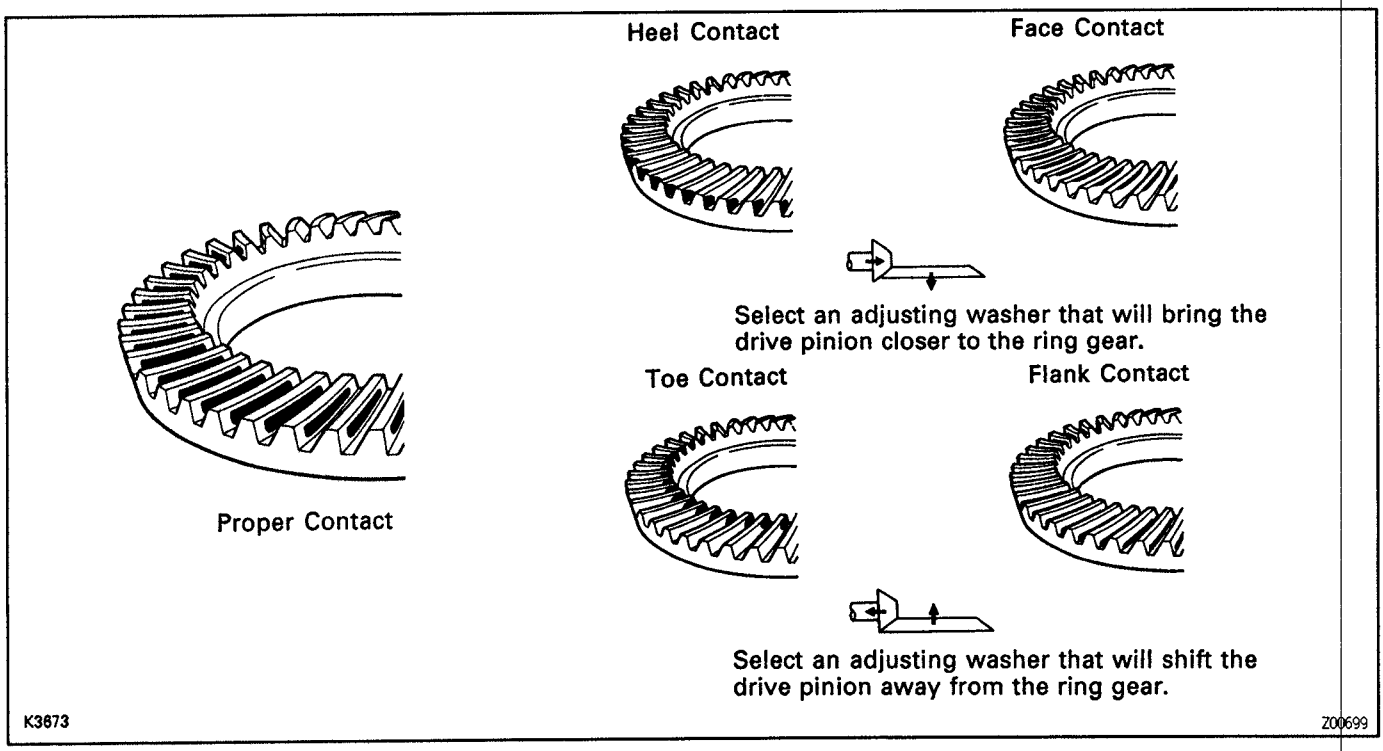

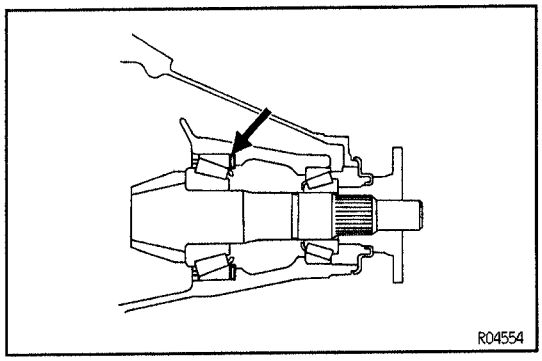

If the teeth are not contacting properly, use the following chart to select a proper washer for correction.

Washer thickness

Mark	Thickness mm (in.)	Mark	Thickness mm (in.)	Mark	Thickness mm (in.)
87	1.87 (0.0736)	01	2.01 (0.0791)	15	2.15 (0.0846)
88	1.88 (0.0740)	02	2.02 (0.0795)	16	2.16 (0.0850)
89	1.89 (0.0744)	03	2.03 (0.0799)	17	2.17 (0.0854)
90	1.90 (0.0748)	04	2.04 (0.0803)	18	2.18 (0.0858)
91	1.91 (0.0752)	05	2.05 (0.0807)	19	2.19 (0.0862)
92	1.92 (0.0756)	06	2.06 (0.0811)	20	2.20 (0.0866)
93	1.93 (0.0760)	07	2.07 (0.0815)	21	2.21 (0.0870)
94	1.94 (0.0764)	08	2.08 (0.0819)	22	2.22 (0.0874)
95	1.95 (0.0768)	09	2.09 (0.0823)	23	2.23 (0.0878)
96	1.96 (0.0772)	10	2.10 (0.0827)	24	2.24 (0.0882)
97	1.97 (0.0776)	11	2.11 (0.0831)	25	2.25 (0.0886)
98	1.98 (0.0780)	12	2.12 (0.0835)	26	2.26 (0.0890)
99	1.99 (0.0783)	13	2.13 (0.0839)	27	2.27 (0.0894)
00	2.00 (0.0787)	14	2.14 (0.0843)	28	2.28 (0.0898)

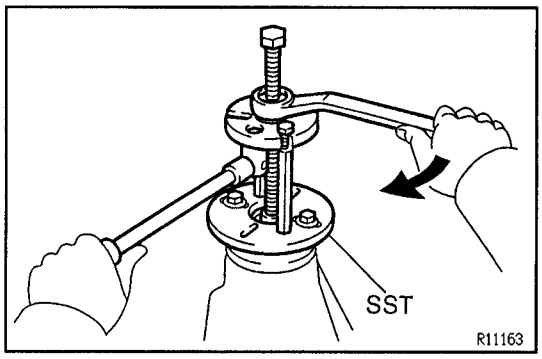

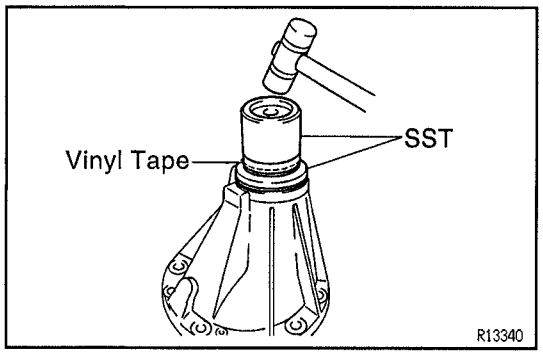

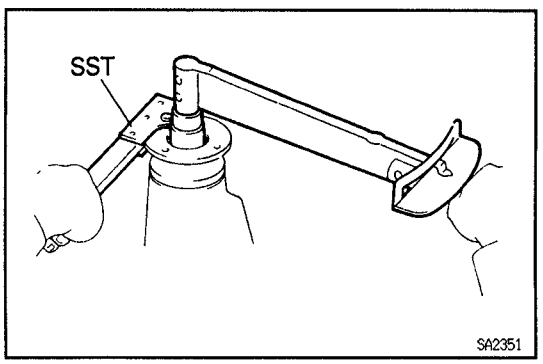

14. REMOVE COMPANION FLANGE
(See page SA–122)

15. REMOVE FRONT BEARING
(See page SA–123)

16. INSTALL NEW BEARING SPACER, 2 WASHERS AND FRONT BEARING

(a) Install a new bearing spacer and 2 washers, and place the front bearing.

(b) Using SST and the companion flange, install the front bearing then remove the companion flange.
SST 09950–30010 (09951–03010, 09953–03010, 09954–03010, 09955–03030, 09956–03020)

17. INSTALL NEW OIL SEAL

(a) Coat a new oil seal lip with MP grease.

(b) Using SST, install the oil seal until its surface is flush with the differential carrier end.
SST 09649–17010, 09316–12010
HINT: Connect SST with vinyl tape.

18. INSTALL COMPANION FLANGE

(a) Place the companion flange.

(b) Coat the threads of a new nut with hypoid gear oil.

(c) Using SST to hold the flange, torque the nut.
SST 09330–00021
Torque: 147 N·m (1,500 kgf·cm, 109 ft·lbf)

SA

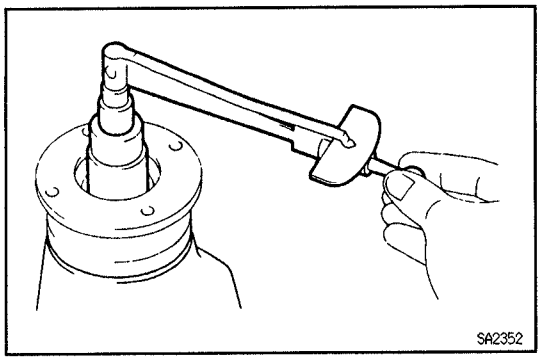

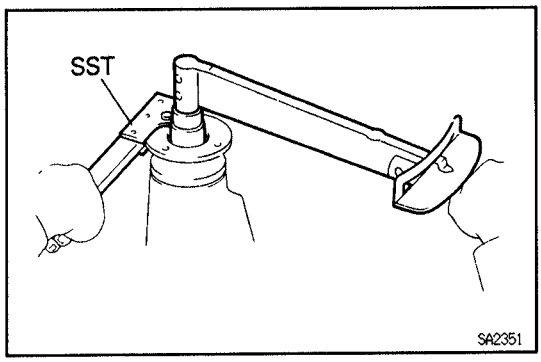

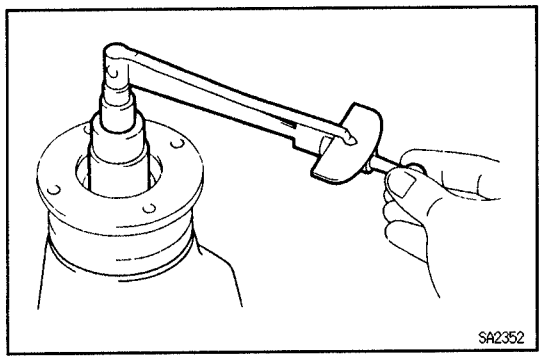

19. ADJUST DRIVE PINION PRELOAD

Using a torque wrench, measure the preload of the backlash between the drive pinion and ring gear.

Preload (at starting):

New bearing

1.0–1.6 N·m (10–16 kgf·cm, 8.7–13.9 in.·lbf)

Reused bearing

0.5–0.8 N·m (5–8 kgf·cm, 4.3–6.9 in.·lbf)

If the preload is greater than the specification, replace the bearing spacer.

If the preload is less than the specification, retighten the nut 13 N·m (130 kgf·cm, 9 ft·lbf) a little at a time until the specified preload is reached.

Maximum torque:

451 N·m (4,600 kgf·cm, 333 ft·lbf)

If the maximum torque is exceeded while retightening the nut, replace the bearing spacer and repeat the preload procedure. Do not back off the pinion nut to reduce the preload.

20. CHECK TOTAL PRELOAD

Using a torque wrench, measure the preload with the teeth of the drive pinion and ring gear in contact.

Total preload (at starting):

Add drive pinion preload

0.4–0.6 N·m (4–6 kgf·cm, 3.5–5.2 in.·lbf)

21. CHECK RING GEAR BACKLASH

Using a dial indicator, measure the ring gear backlash.

Backlash:

0.13–0.18 mm (0.0051–0.0071 in.)

22. RECHECK TOOTH CONTACT BETWEEN RING GEAR AND DRIVE PINION

(See page SA–130)

23. CHECK RUNOUT OF COMPANION FLANGE

(See page SA–121)

24. STAKE DRIVE PINION NUT

DIFFERENTIAL CARRIER (3RZ–FE, 5VZ–FE w/ Diff. Lock)

COMPONENTS

SA28G–01

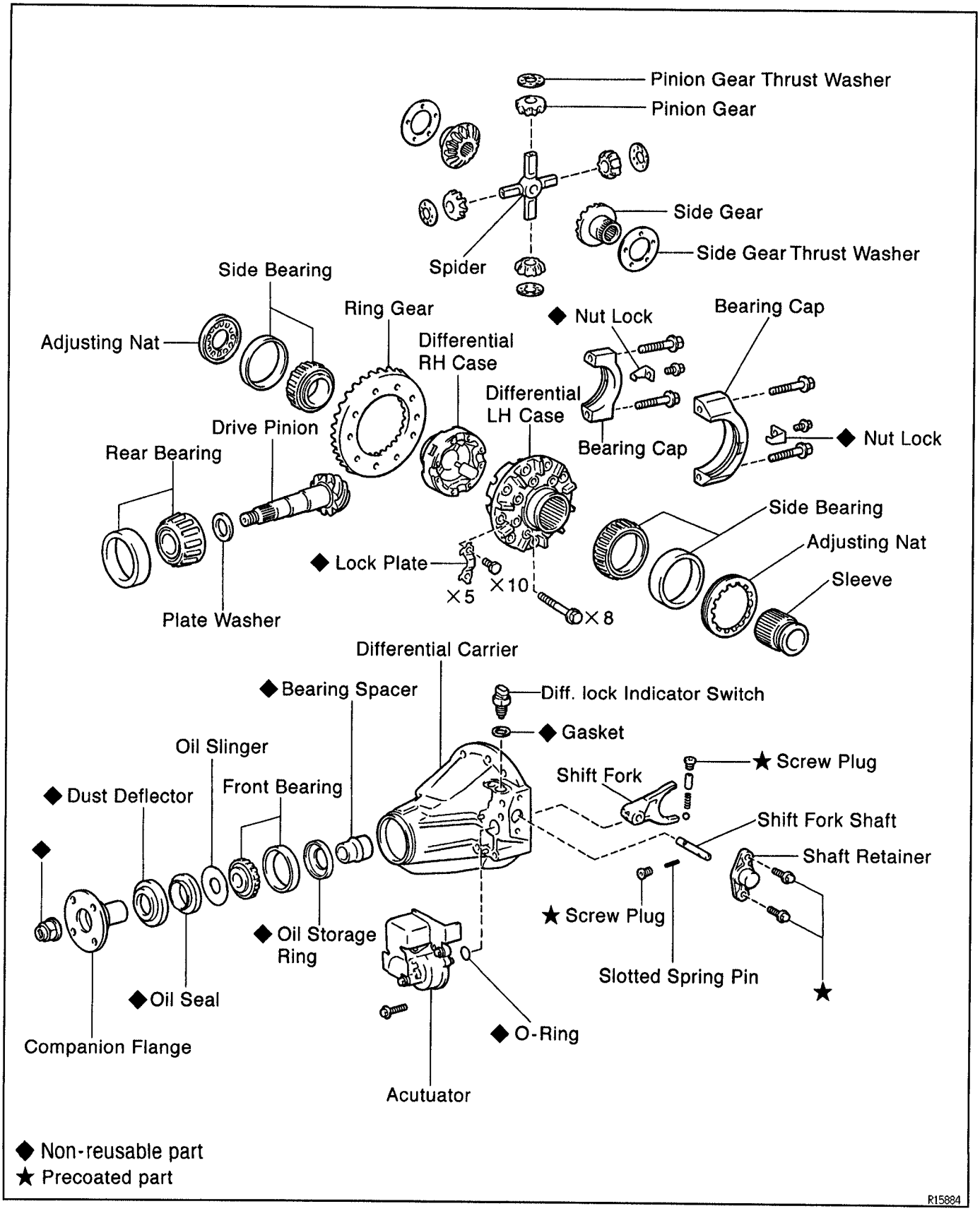

SA

SA28H-01

DIFFERENTIAL CARRIER INSPECTION

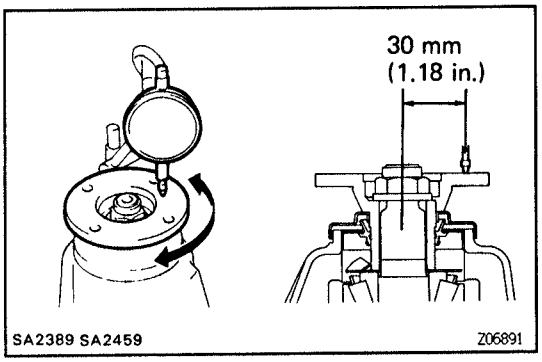

1. CHECK RUNOUT OF COMPANION FLANGE

Using a dial indicator, measure the vertical and lateral runout of the companion flange.

Maximum vertical runout:

0.10 mm (0.0039 in.)

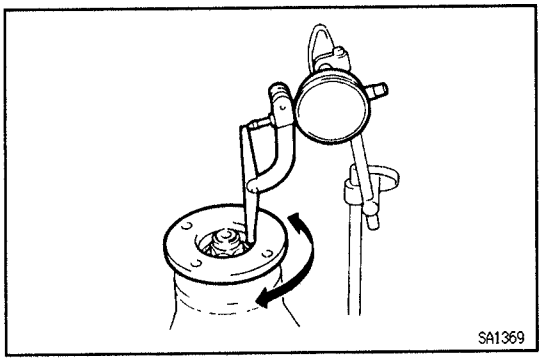

Maximum lateral runout:

0.10 mm (0.0039 in.)

If the runout are not within the specification, replace the companion flange.

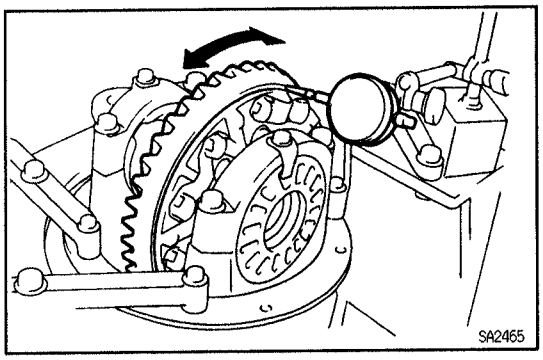

2. CHECK RING GEAR RUNOUT

Using a dial indicator, measure the ring gear runout.

Maximum runout:

0.10 mm (0.0039 in.)

If the runout is not within the specification, replace the ring gear.

SA

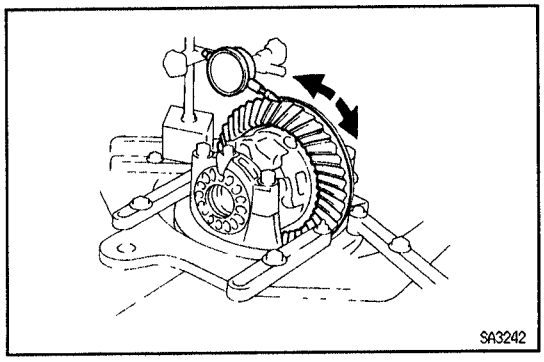

3. CHECK RING GEAR BACKLASH

Using a dial indicator, measure the ring gear backlash.

Backlash:

0.13–0.18 mm (0.0051–0.0071 in.)

If the backlash is not within the specification, adjust the side bearing preload or repair as necessary.

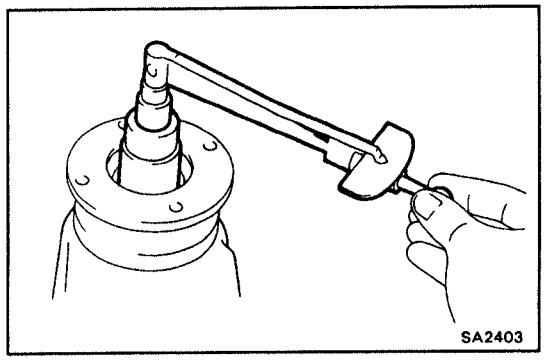

4. MEASURE DRIVE PINION PRELOAD

Using a torque wrench, measure the preload of backlash between the drive pinion and ring gear.

Preload (at starting):

0.5–0.8 N·m (5–8 kgf·cm, 4.3–6.9 in.·lbf)

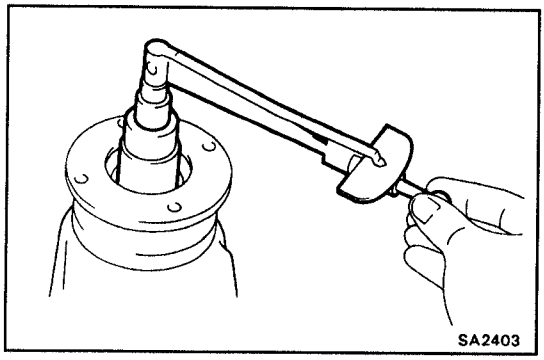

5. CHECK TOTAL PRELOAD

Using a torque wrench, measure the preload with the teeth of the drive pinion and ring gear in contact.

Total preload (at starting):

In addition to drive pinion preload

0.4–0.6 N·m (4–6 kgf·cm, 3.5–5.2 in.·lbf)

If necessary, disassemble and inspect the differential.

6. CHECK TOOTH CONTACT BETWEEN RING GEAR AND DRIVE PINION

(See page SA–144)

DIFFERENTIAL CARRIER DISASSEMBLY SA1UF-02

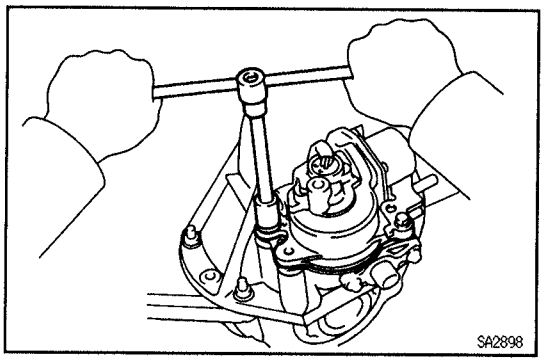

1. REMOVE ACTUATOR

(a) Remove the bolt and actuator from the differential carrier.

(b) Remove the O–ring.

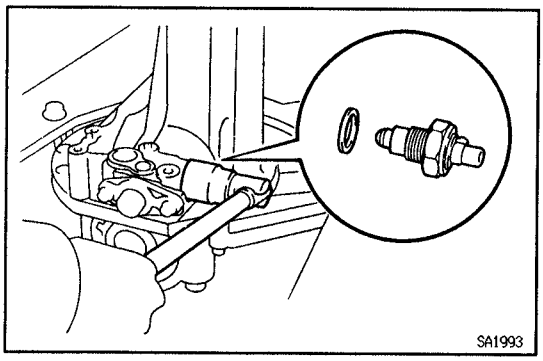

2. REMOVE INDICATOR SWITCH

Remove the indicator switch and gasket.

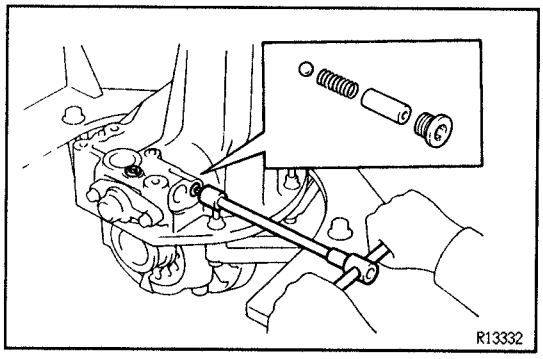

3. REMOVE SHIFT FORK SHAFT

(a) Using a hexagon wrench, remove the 2 straight screw plugs.

(b) Remove the spring seat, compression spring and ball.

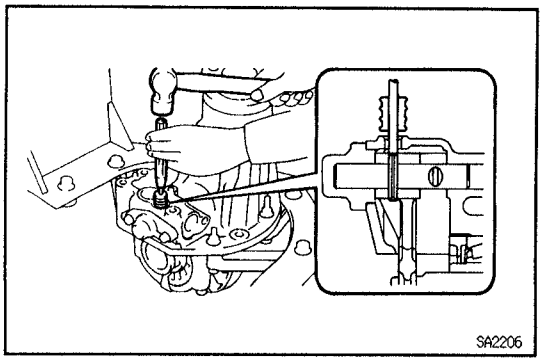

(c) Using a pin punch and a hammer, remove the slotted spring pin.

SA

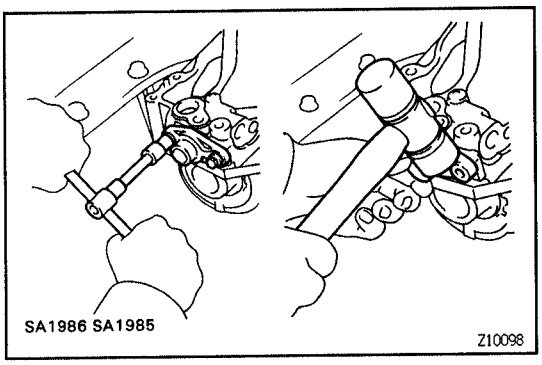

(d) Remove the 2 bolts from the shaft retainer.
(e) Using a plastic hammer, remove the shaft retainer.
(f) Remove the shift fork shaft.
HINT: Pull out the shift fork shaft with a screwdriver turned round.

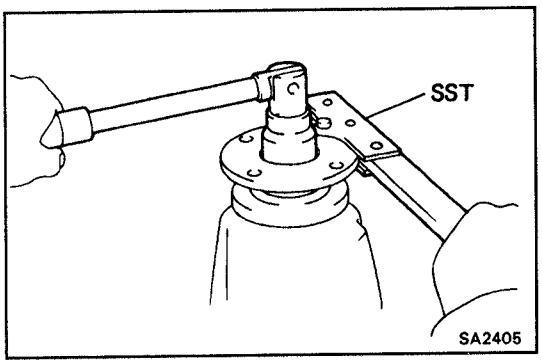

4. REMOVE COMPANION FLANGE
(a) Using a chisel and a hammer, unstake the nut.
(b) Using SST to hold the flange, remove the nut.
SST 09330–00021

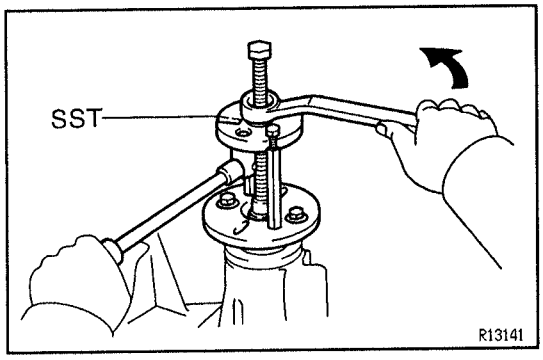

(c) Using SST, remove the companion flange.
SST 09950–30010 (09951–03010, 09953–03010, 09954–03010, 09955–03030, 09956–03020)

SA

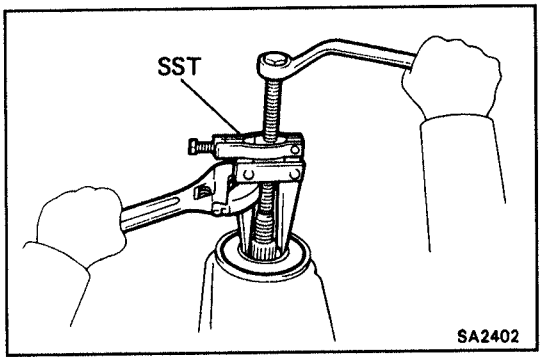

5. REMOVE OIL SEAL AND OIL SLINGER
(a) Using SST, remove the oil seal from the differential carrier.
SST 09308–10010
(b) Remove the oil slinger.

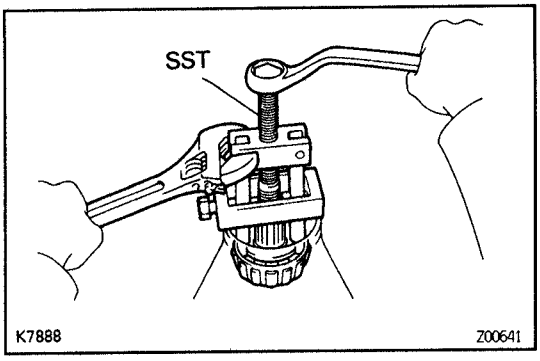

6. REMOVE FRONT BEARING
Using SST, remove the front bearing from the drive pinion.
SST 09556–22010

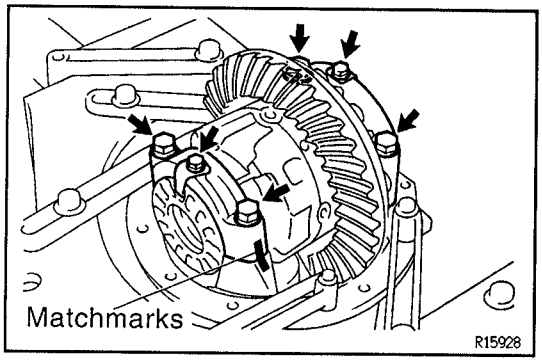

7. REMOVE DIFFERENTIAL CASE

(a) Place matchmarks on the bearing cap and differential carrier.
(b) Remove the 2 adjusting nut locks.
(c) Remove the 4 bolts and 2 bearing caps.

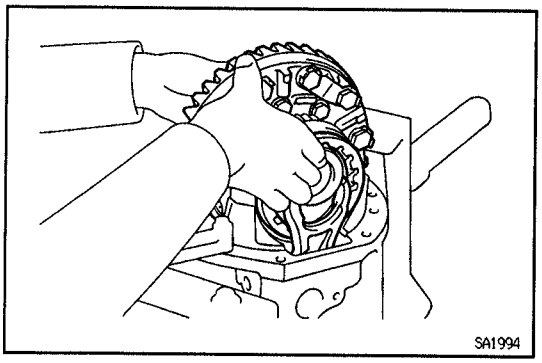

(d) Remove the differential case with side bearing outer race, adjusting nuts and sleeve from the differential carrier.
(e) Remove the shift fork.

8. REMOVE DRIVE PINION AND BEARING SPACER

(a) Remove the drive pinion with the rear bearing.
(b) Remove the bearing spacer.

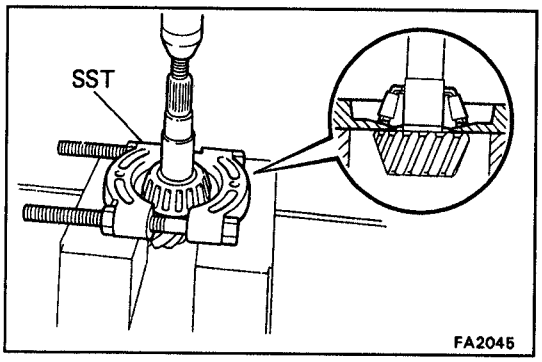

9. REMOVE DRIVE PINION FRONT BEARING

(a) Using SST and a press, remove the bearing from the drive pinion.
SST 09950–00020
HINT: If the drive pinion or ring gear are damaged, replace them as a set.
(b) Remove the plate washer from the drive pinion.

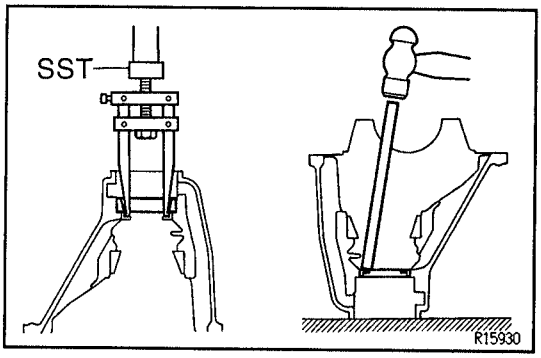

10. REMOVE FRONT AND REAR BEARING OUTER RACES AND OIL STRAGE RING

(a) Using SST, remove the front bearing outer race.
SST 09308–00010
(b) Using a brass bar and a hammer, remove the oil strage ring.
(c) Using a brass bar and a hammer, remove the bearing.

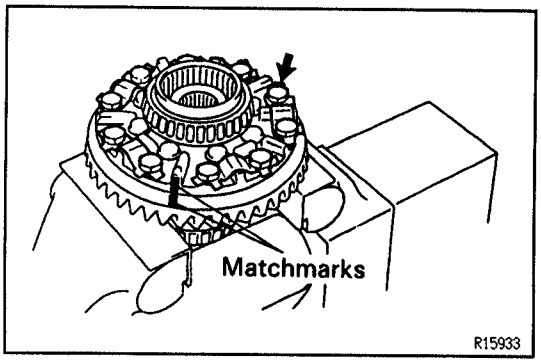

11. REMOVE RING GEAR

(a) Place matchmarks on the ring gear and differential case.
(b) Using a screwdriver and a hammer, unstake the lock plate.
(c) Remove the ring gear set bolts and lock plates.
(d) Using a plastic hammer, tap on the ring gear to separate it from the differential case.

SA

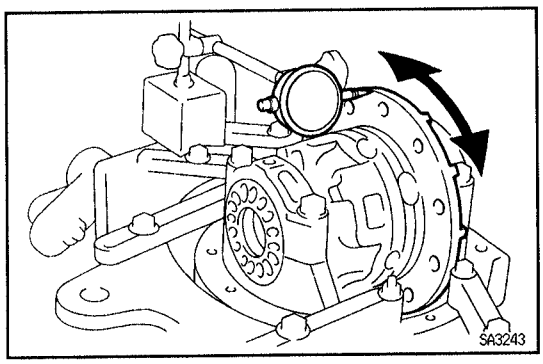

12. CHECK DIFFERENTIAL CASE RUNOUT

(a) Install the differential case in the differential carrier and tighten the adjusting nut just to where there is no play in the bearing.

(b) Using a dial indicator, measure the differential case runout.

Maximum case runout:

0.07 mm (0.0028 in.)

(c) Remove the differential case.

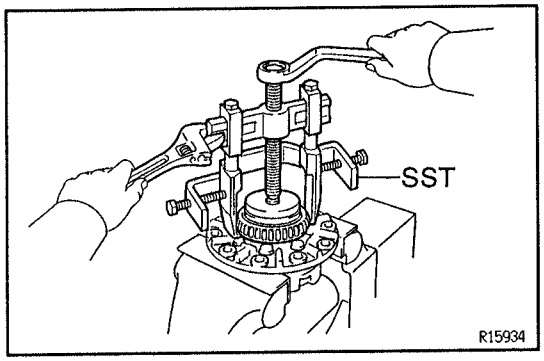

13. REMOVE SIDE BEARING FROM DIFFERENTIAL CASE

Using SST, remove the side bearing from the differential case.

SST 09950–40010 (09951–04010, 09952–04010, 09953–04020, 09954–04010, 09955–04060, 09957–04010, 09958–04010), 09950–60010 (09951–00480), 09950–60020 (09951–00730)

HINT: Fix the claws of SST to the notches in the differential case.

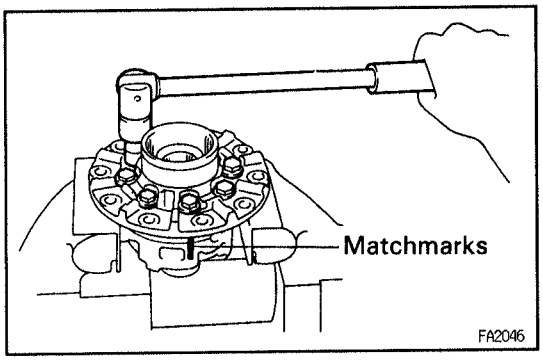

14. DISASSEMBLE DIFFERENTIAL CASE

(a) Place matchmarks on the LH and RH cases.

(b) Remove the 8 bolts uniformly, a little at a time.

(c) Using a plastic hammer, separate the LH and RH cases.

(d) Remove these parts:

- Side gear (2 pieces)
- Side gear thrust washer (2 pieces)
- Spider
- Pinion gear (4 pieces)
- Pinion gear thrust washer (4 pieces)

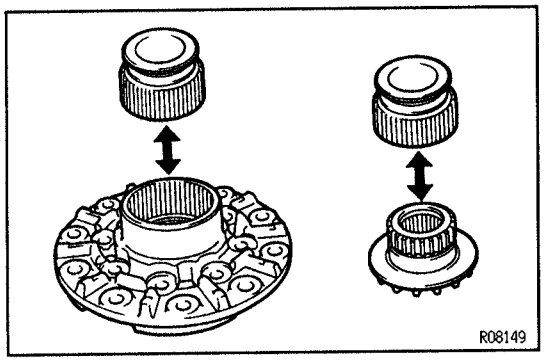

15. INSPECT SLEEVE

(a) Install the sleeve to the differential case (LH) and check it moves smoothly.

(b) Install the sleeve to the side gear and check it moves smoothly.

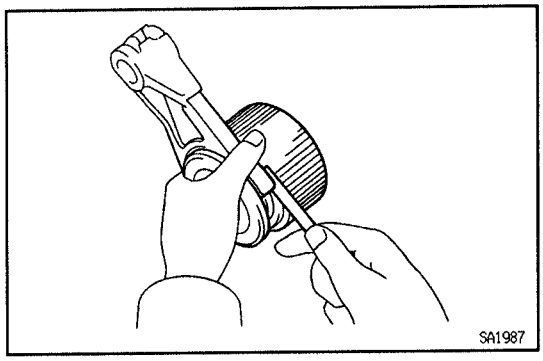

16. MEASURE CLEARANCE OF SHIFT FORK AND SLEEVE

Using a feeler gauge, measure the clearance between the shift fork and sleeve.

Clearance (Reference):

0.15 – 0.35 mm (0.006 – 0.014 in.)

SA

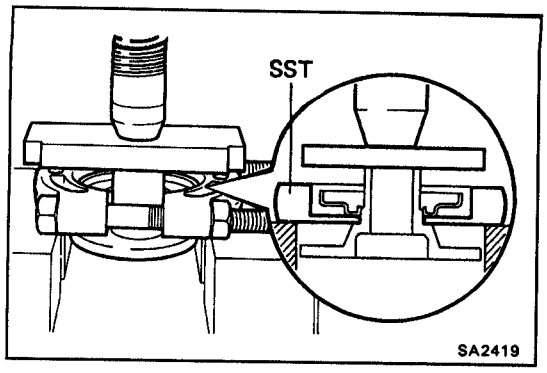

COMPANION FLANGE DUST DEFLECTOR SA28J-01

REPLACEMENT

1. **REMOVE DUST DEFLECTOR TO COMPANION FLANGE**

Using SST and a press, remove the dust deflector.
SST 09950–00020

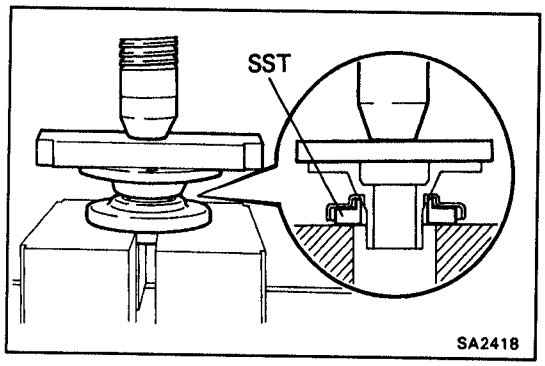

2. **INSTALL DUST DEFLECTOR TO COMPANION FLANGE**

Using SST and a press, install a new dust deflector.
SST 09726–40010

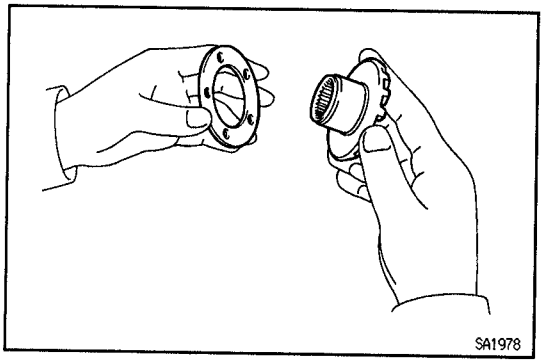

DIFFERENTIAL CARRIER ASSEMBLY SA28K-01

1. **ASSEMBLE DIFFERENTIAL CASE**

(a) Apply all of the sliding and rotating sufaces with gear oil.
(b) Install the side gear thrust washer to the side gear.
(c) Install the side gear to the RH case.

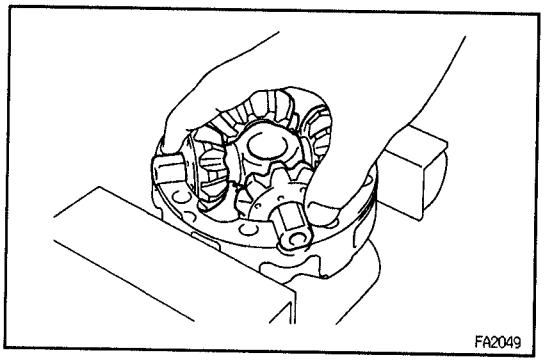

(d) Install the 4 pinion gears and pinion gear thrust washers to the spider.
(e) Install the pinion gear with spider to the RH case.

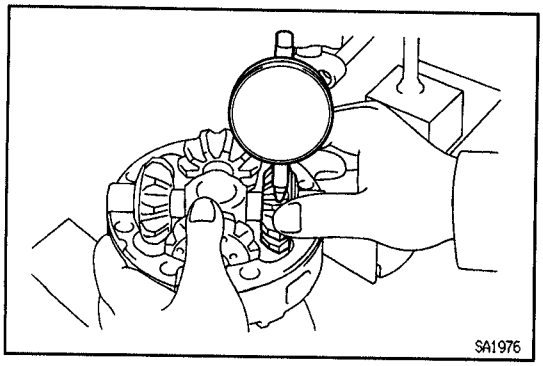

(f) Using a dial indicator, hold the side gear and spider and measure the side gear backlash.
Standard backlash:
0.05 – 0.20 mm (0.0020 – 0.0079 in.)
HINT:
- Measure at all 4 locations.
- Measure the backlash at the RH case at the LH case.

If the backlash is not within the specification, install a thrust washer of a different thickness.
Thrust washer thickness

Thickness mm (in.)	Thickness mm (in.)
0.9 (0.035)	1.2 (0.047)
1.0 (0.039)	1.3 (0.051)
1.1 (0.043)	–

SA

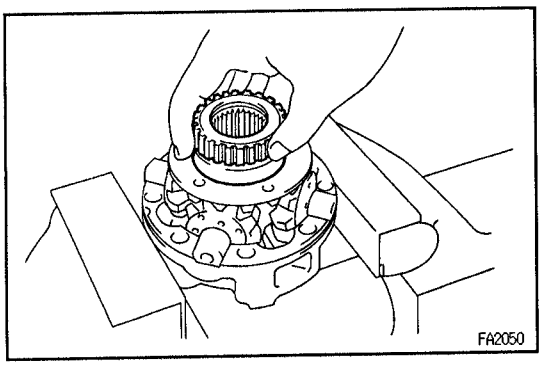

(g) Install the side gear and side gear thrust washer to the RH case.
(h) Install the pinion gears and spider to the RH case.
(i) Install the side gear and side gear thrust washer to the RH case.
(j) Align the matchmarks on the LH and RH cases.
(k) Torque the 8 bolts uniformly, a little at a time.
Torque: 47 N·m (480 kgf·cm, 35 ft·lbf)

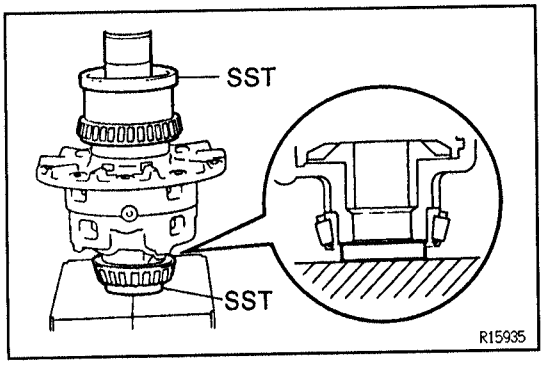

2. INSTALL SIDE BEARINGS
Using SST and a press, install the side bearings on the differential case.
SST 09950–60010 (09951–00480, 09951–00550),
09950–60020 (09951–00730)

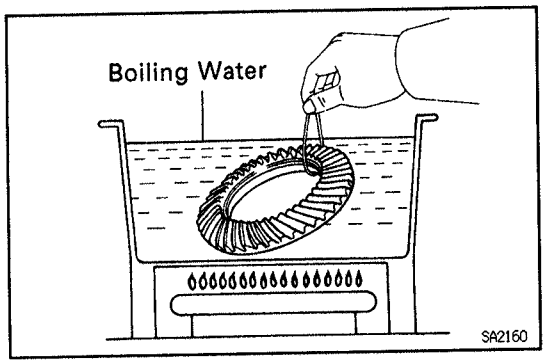

3. INSTALL RING GEAR ON DIFFERENTIAL CASE
(a) Clean the contact surfaces of the differential case and ring gear.
(b) Heat the ring gear to about 100 °C (212 °F) in boiling water.
(c) Carefully remove the ring gear from the water.
(d) After the moisture on the ring gear has completely evaporated, quickly install the ring gear to the differential case.
(e) Align the matchmarks on the ring gear and differential case.
(f) Temporarily install new lock plates and set bolts.
(g) After the ring gear cools down enough, tighten the set bolts uniformly and a little at a time.
Torque: 97 N·m (985 kgf·cm, 71 ft·lbf)

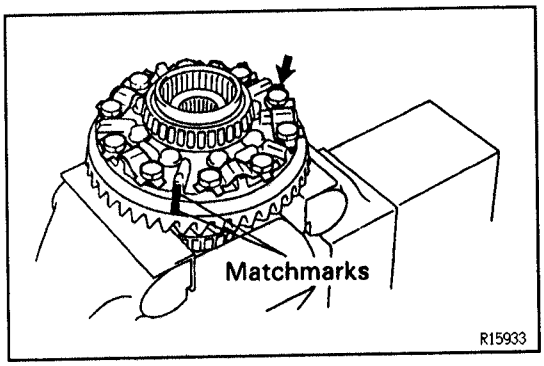

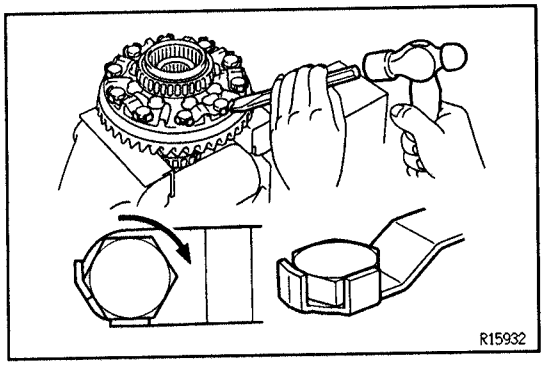

(h) Using a drift punch and hammer, stake the lock plates.
HINT: Stake one claw flush with the flat surface of the bolt. For the claw contacting the protruding portion of the bolt, stake the half on the tightening side.

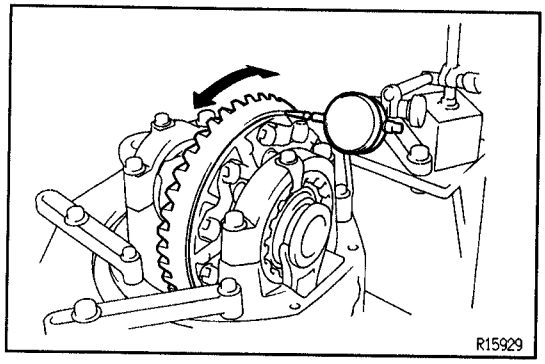

4. CHECK RING GEAR RUNOUT

(a) Install the differential case onto the carrier and tighten the adjusting nut just to where there is no play in the bearings.

(b) Using a dial indicator, check the ring gear runout.
Maximum runout:
0.10 mm (0.0039 in.)

(c) Remove the differential case.

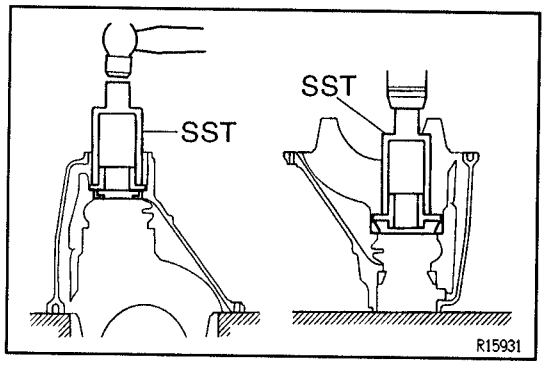

5. INSTALL NEW OIL STRAGE RING AND DRIVE PINION FRONT AND REAR BEARING OUTER RACES

(a) Using SST and a hammer, install new oil strage ring.
SST 09316–60011 (09316–00011, 09316–00021)

(b) Using SST and a press, install the outer races.
SST 09316–60011 (09316–00011, 09316–00021, 09316–00051)

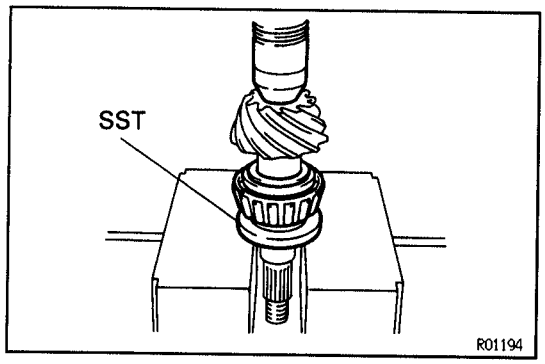

6. INSTALL DRIVE PINION FRONT BEARING

(a) Install the plate washer on the drive pinion.

(b) Using SST and a press, install the rear bearing onto the drive pinion.
SST 09506–30012

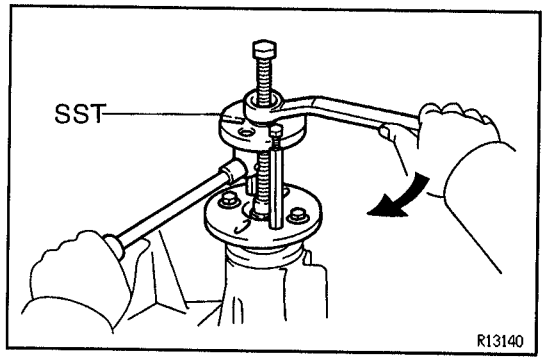

7. TEMPORARILY ADJUST DRIVE PINION PRELOAD

(a) Install the drive pinion, front bearing and oil slinger.
HINT: Assemble the spacer and oil seal after adjusting the gear contact pattern.

(b) Install the companion flange with SST.
SST 09550–30010

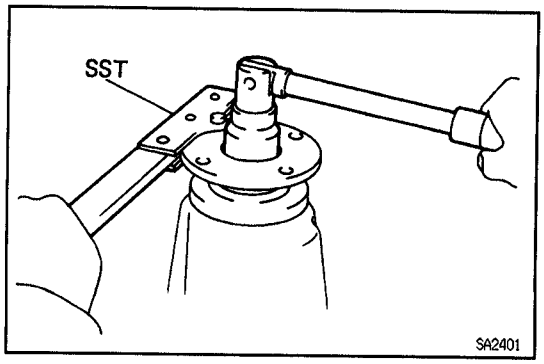

(c) Adjust the drive pinion preload by tightening the companion flange nut.
Using SST to hold the flange, tighten the nut.
SST 09330–00021
NOTICE: As there is no spacer, tighten a little at a time, being careful not to overtighten.

SA

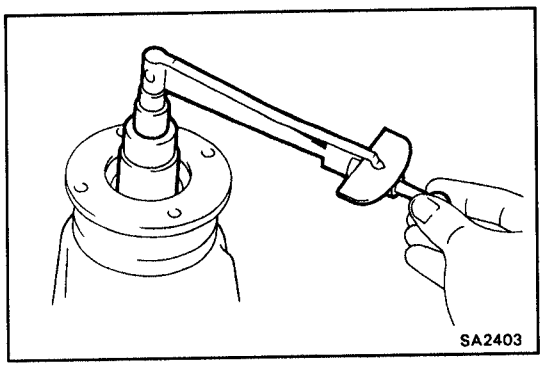

(d) Using a torque wrench, measure the preload.
Preload (starting):
New bearing
0.9–1.6 N·m (10–16 kgf·cm, 8.7–13.9 in.·lbf)
Reused bearing
0.5–0.8 N·m (5–8 kgf·cm, 4.3–6.9 in.·lbf)
HINT: Measure the total preload after first turning the bearing clockwise and counterclockwise several times to mark the bearing smooth.

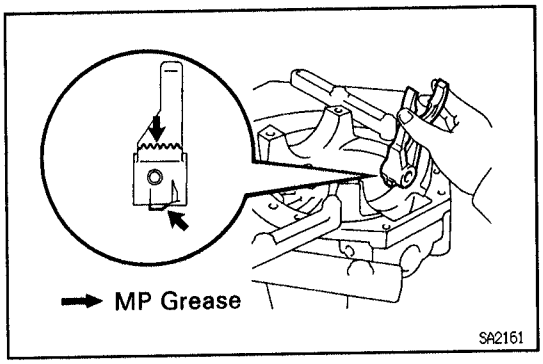

8. INSTALL DIFFERENTIAL CASE IN CARRIER
(a) Apply MP grease on the rack of the shift fork and connecting part of the indicator switch.
(b) Insert the shift fork into the differential carrier, as shown.

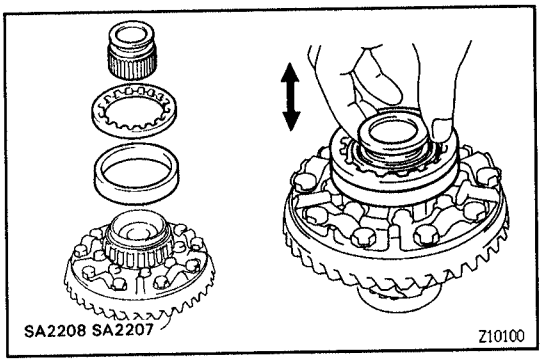

(c) Place the outer races, adjusting nuts and left side to sleeve.
HINT: Check that the sleeve moves smoothly.

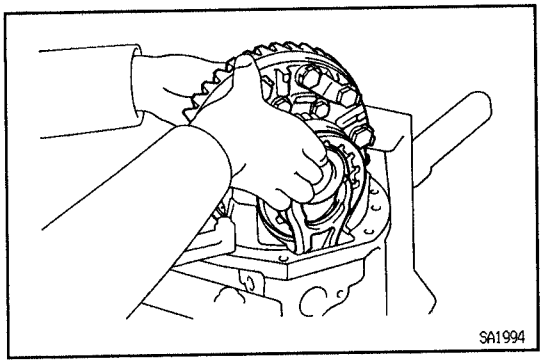

(d) Install the shift fork in the groove of the sleeve holding it by hand and install the case in the carrier.
HINT: Make sure that there is backlash between the ring gear and drive pinion.

9. INSTALL BEARING CAPS
Align the matchmarks on the cap and carrier. Screw in the 2 bearing cap bolts 2 or 3 turns and press down the bearing cap by hand.

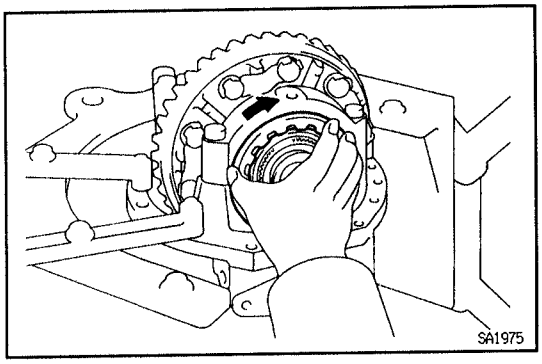

HINT: If the bearing cap does not fit tightly on the carrier, the adjusting nuts are not threaded properly. Reinstall the adjusting nuts if necessary.

SA

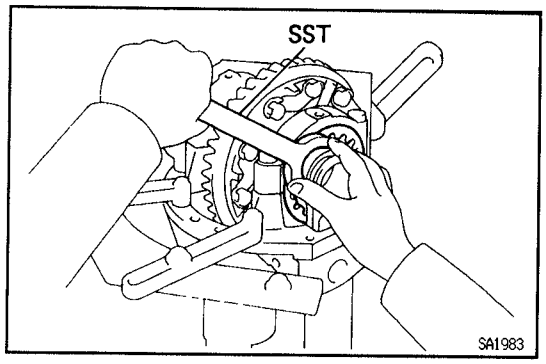

10. ADJUST SIDE BEARING PRELOAD

(a) Torque the 4 bearing cap bolts to the specified torque, then loosen them to the point where the adjusting nuts can be turned by hand.
Torque: 78 N·m (800 kgf·cm, 58 ft·lbf)

(b) Fully tighten the 4 bearing cap bolts by hand.

(c) Using the SST, torque the adjusting nut on the ring gear side until the ring has a backlash of about 0.2 mm (0.008 in.).
SST 09616–30020

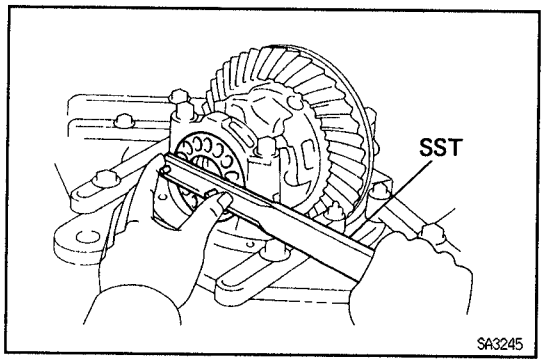

(d) While turning the ring gear, use the SST to fully tighten the adjusting nut on the drive pinion side. After the bearings are settled, loosen the adjusting nut on the drive pinion side.
SST 09616–30020

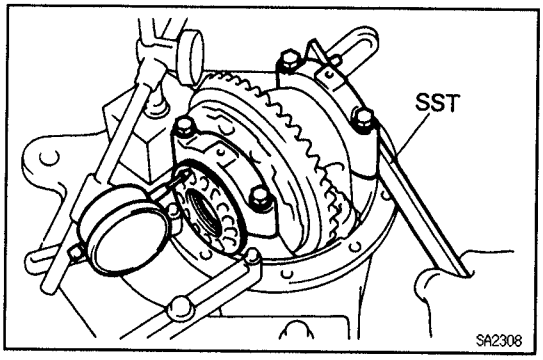

(e) Place a dial indicator on the top of the adjusting nut on the ring gear side.

(f) Adjust the side bearing for zero preload by tightening the other adjusting nut until the pointer on the indicator begins to move.

(g) Torque the adjusting nut 1–1.5 notches from the zero preload position.

SA

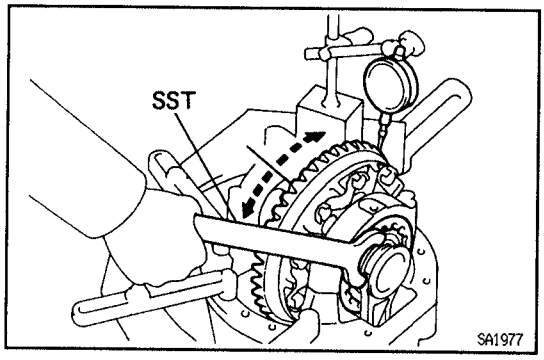

(h) Using a dial indicator, adjust the ring gear backlash until it is within specification.
Backlash:
0.13–0.18 mm (0.0051–0.0071 in.)
HINT: The backlash is adjusted by turning the left and right adjusting nuts equal amounts. For example, loosen the nut on the left side one notch and torque the nut on the right side one notch.

(i) Torque the bearing cap bolts.
Torque: 78 N·m (800 kgf·cm, 58 ft·lbf)

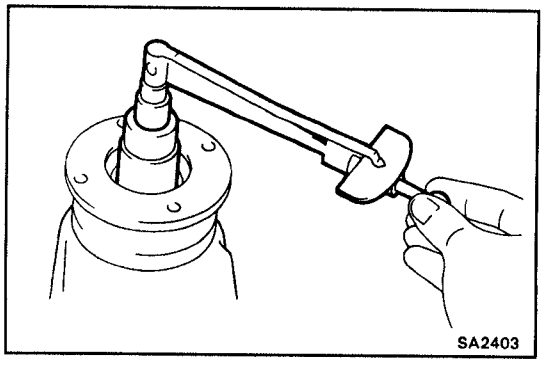

(j) Recheck the ring gear backlash.
Backlash:
0.13–0.18 mm (0.0051–0.0071 in.)

(k) Using a torque wrench, measure the preload with the teeth of the drive pinion and ring gear in contact.
Total preload (starting):
Add drive pinion preload
0.4–0.6 N·m (4–6 kgf·cm, 3.5–5.2 in.·lbf)

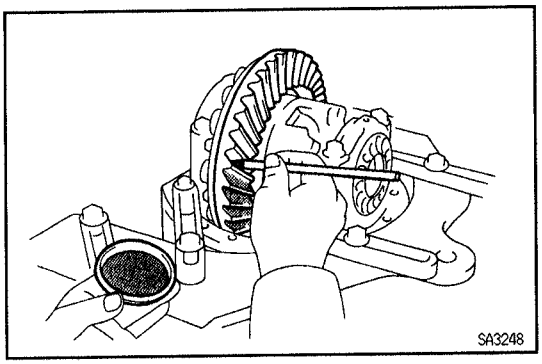

11. INSPECT TOOTH CONTACT BETWEEN RING GEAR AND DRIVE PINION

(a) Coat 3 or 4 teeth at 3 different positions on the ring gear with red lead.

(b) Hold the companion flange firmly and rotate the ring gear in both directions.

(c) Inspect the tooth pattern.

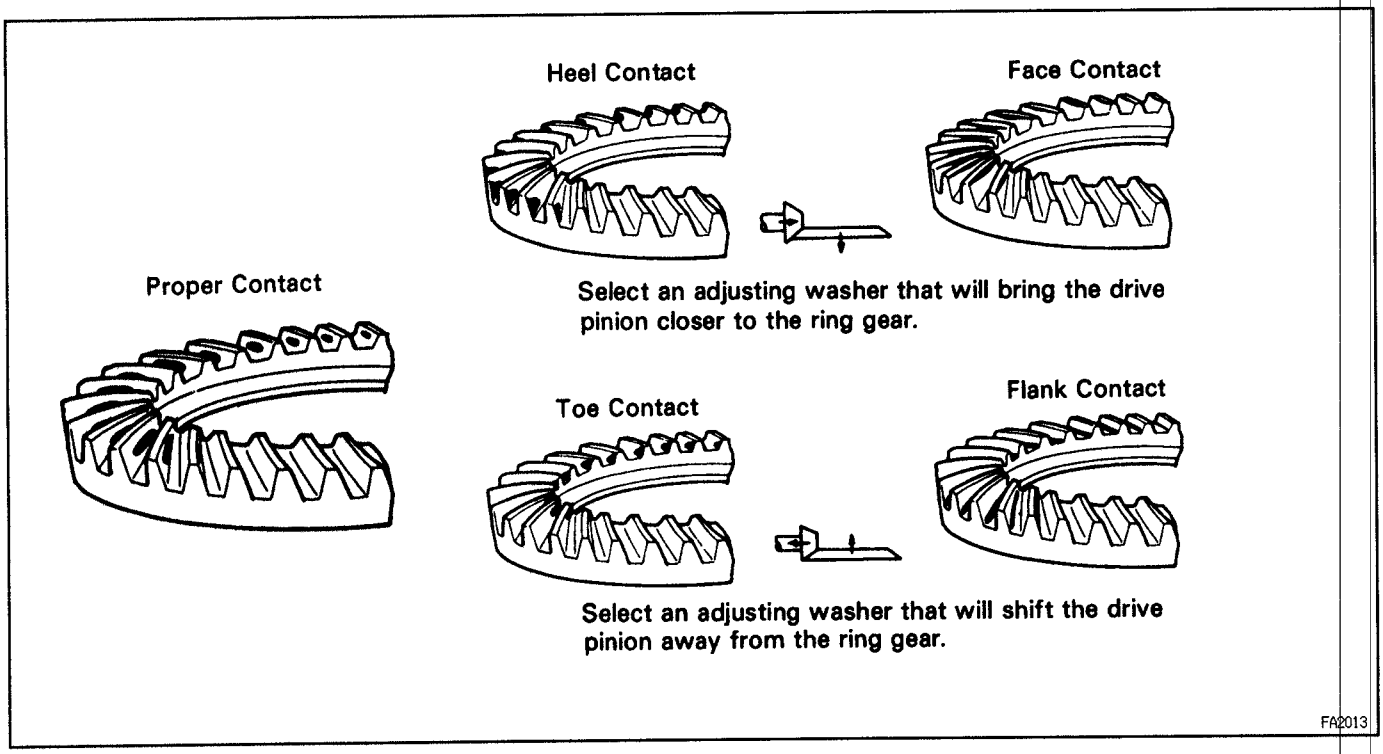

SA

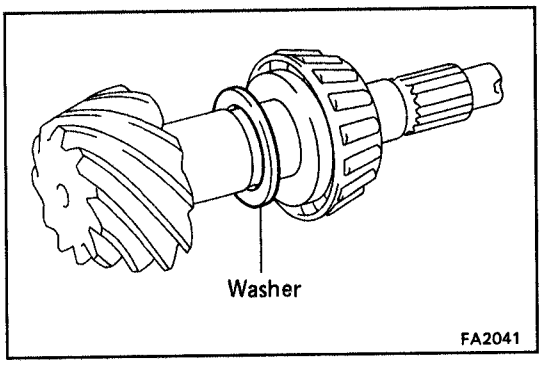

If the teeth are not contacting properly, use the following chart to select a proper washer for correction.

Thickness mm (in.)	Thickness mm (in.)
1.70 (0.0669)	2.03 (0.0799)
1.73 (0.0681)	2.06 (0.0811)
1.76 (0.0693)	2.09 (0.0823)
1.79 (0.0705)	2.12 (0.0835)
1.82 (0.0717)	2.15 (0.0846)
1.85 (0.0728)	2.18 (0.0858)
1.88 (0.0740)	2.21 (0.0870)
1.91 (0.0752)	2.24 (0.0882)
1.94 (0.0764)	2.27 (0.0894)
1.97 (0.0776)	2.30 (0.0906)
2.00 (0.0787)	2.33 (0.0917)

12. REMOVE COMPANION FLANGE
(See page SA–136)

13. REMOVE OIL SLINGER AND FRONT BEARING
(See page SA–136)

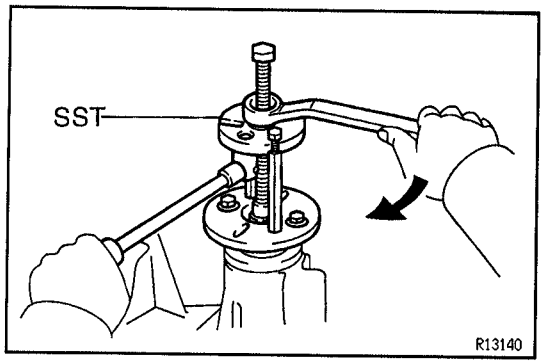

14. INSTALL BEARING SPACER AND FRONT BEARING

(a) Place a new bearing spacer on the shaft.
(b) Place the front bearing and oil slinger.
(c) Using SST and the companion flange, install the front bearing then remove the companion flange.
SST 09950–30010 (09951–06010, 09953–03010, 09954–03010, 09955–03030, 09956–03030)

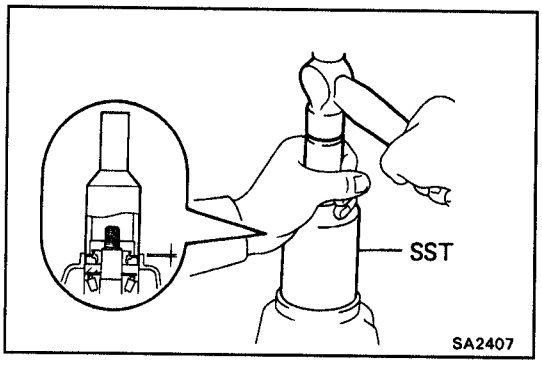

15. INSTALL OIL SEAL

(a) Apply MP grease to the oil seal lip.
(b) Using SST, install a new oil seal.
SST 09214–76011
Oil seal drive in depth:
1.0 mm (0.039 in.)

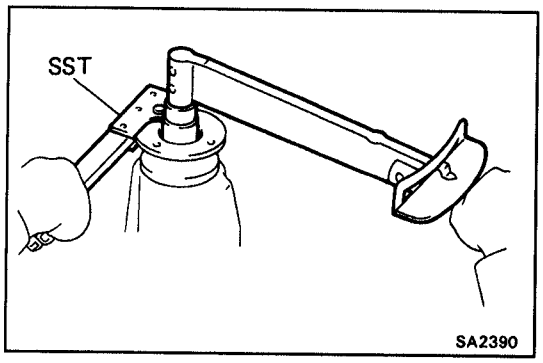

16. INSTALL COMPANION FLANGE

(a) Place the companion flange on the drive pinion.
(b) Install a new nut.
HINT: Coat the threads of a new nut with hypoid gear oil.
(c) Using SST to hold the flange, tighten the nut.
SST 09330–00021
Torque: 196 N·m (2,000 kgf·cm, 145 ft·lbf)

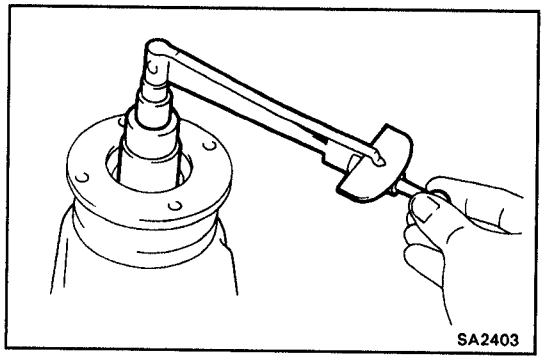

17. ADJUST DRIVE PINION PRELOAD

Using a torque wrench, measure the preload of the backlash between the drive pinion and ring gear.
Preload (starting):
New bearing
0.9–1.6 N·m (10–16 kgf·cm, 8.7–13.9 in.·lbf)
Reuse bearing
0.5–0.8 N·m (5–8 kgf·cm, 4.3–6.9 in.·lbf)
If preload is greater than specification, replace the bearing spacer.
If preload is less than specification, retighten the nut a little at a time with a torque of 13 N·m (130 kgf·cm, 9 ft·lbf) until the specified preload is reached.
Maximum torque:
343 N·m (3,500 kgf·cm, 253 ft·lbf)
If the maximum torque is exceeded while retightening the nut, replace the bearing spacer and repeat the preload procedure. Do not back off the pinion nut to reduce the preload.

SA

18. RECHECK RING GEAR BACKLASH
(See page SA–134)

19. RECHECK TOOTH CONTACT BETWEEN RING GEAR AND DRIVE PINION
(See page SA–144)

20. CHECK RUNOUT OF COMPANION FLANGE
(See page SA–134)

21. STAKE DRIVE PINION NUT

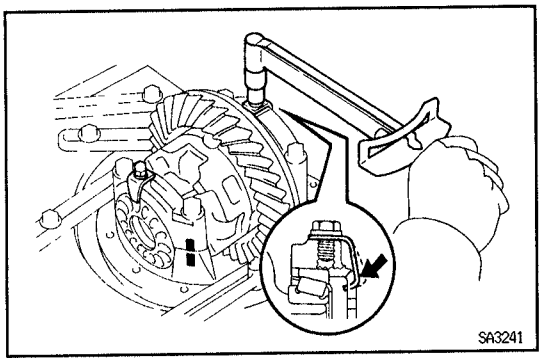

22. INSTALL ADJUSTING NUT LOCKS

(a) Install 2 new nut locks on the bearing caps.
Torque: 13 N·m (130 kgf·cm, 9 ft·lbf)

(b) After tightening bolts, bend the nut locks.

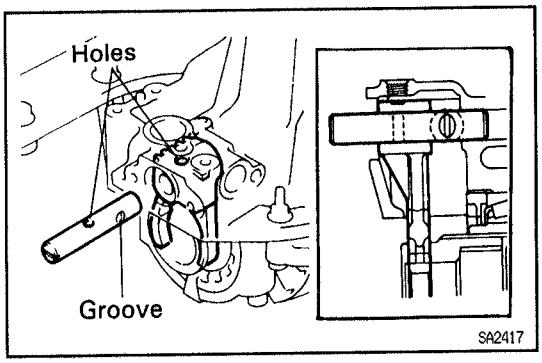

23. INSTALL SHIFT FORK SHAFT

(a) Apply MP grease onto the outer circuit of the fork shaft.

(b) Install the fork shaft to match the hole of the shift fork and that of the shift fork shaft.

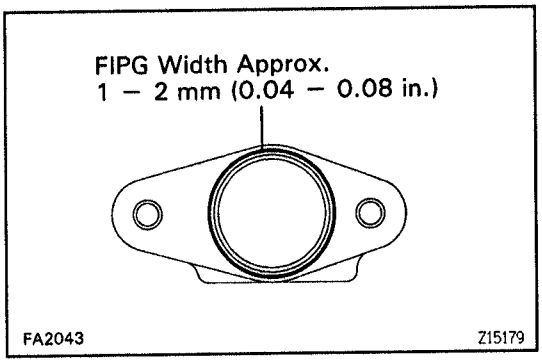

(c) Remove any FIPG material and be careful not to drop oil on the contacting surface of the differential carrier and shaft retainer.

(d) Apply FIPG to the carrier, as shown.
FIPG:
Part No. 08826–00090, THREE BOND 1281 or equivalent
HINT: Install the shaft retainer within 10 minutes after applying FIPG.

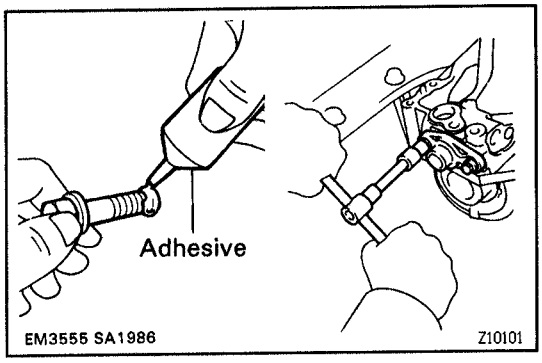

(e) Clean the threads of the bolts and retainer bolts holes with toluene or trichlorethylene.

(f) Apply adhesive to 2 or 3 threads of the mount bolt end.
Adhesive:
Part No. 08833–00080, THREE BOND 1344, LOCTITE 242 or equivalent

(g) Tighten the shaft retainer with the 2 bolts.
Torque: 24 N·m (240 kgf·cm, 17 ft·lbf)

SA

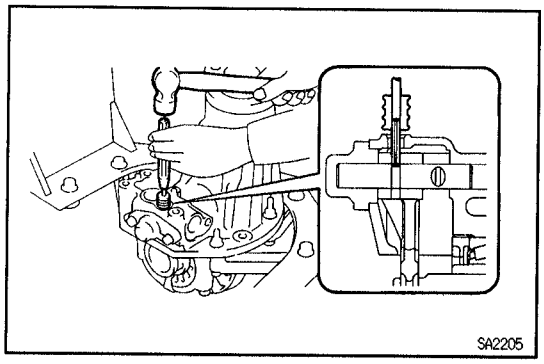

(h) Using a pin punch and hummer, install the slotted spring pin to the shift fork.

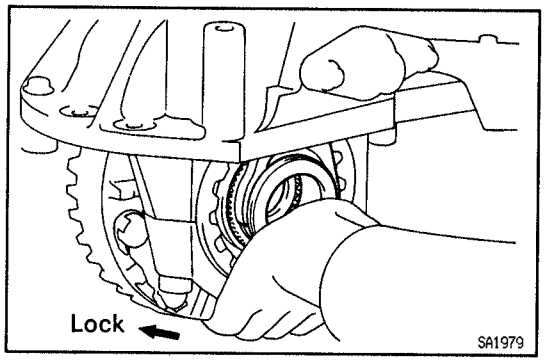

(i) Shift the fork deeply and keep the differential lock condition.

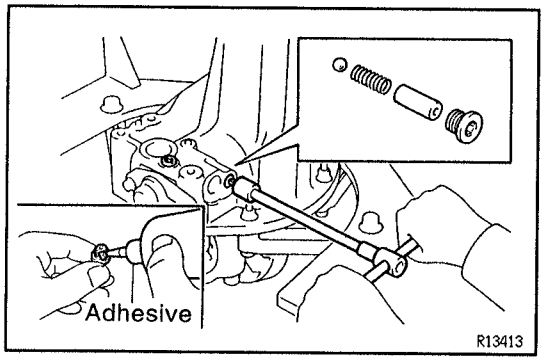

(j) Install the ball, compression spring and spring seat.
(k) Clean the threads of 2 plugs and plug holes with toluene or trichloroethylene.
(l) Apply adhesive to the plug threads.
Adhesive:
PartNo. 08833–00080, THREE BOND 1344, LOCTITE 242 or equivalent
(m) Using a hexagon wrench, install and tighten the screw plugs.
Torque: 22 N·m (220 kgf·cm, 16 ft·lbf)

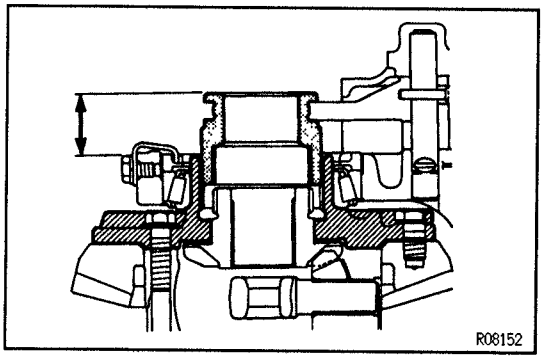

24. MEASURE DISTANCE BETWEEN SLEEVE AND DIFFERENTIAL CASE END SIDE
Measure distance between the sleeve and tip of the differential case when differential is free and locked.
Standard distance:
LOCK: 17.44 – 18.86 mm (0.6866 – 0.7425 in.)
FREE: 32.40 – 33.90 mm (1.2756 – 1.3346 in.)

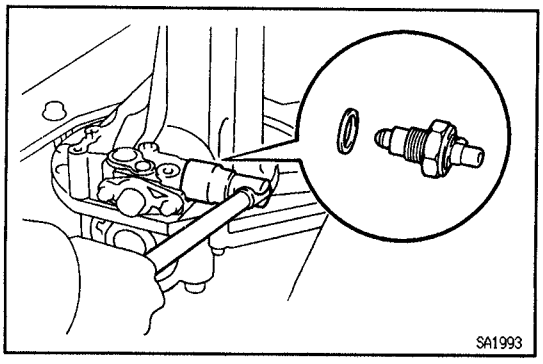

25. INSTALL INDICATOR SWITCH
Install the indicator switch with a new gasket.
Torque: 40 N·m (410 kgf·cm, 30 ft·lbf)

SA

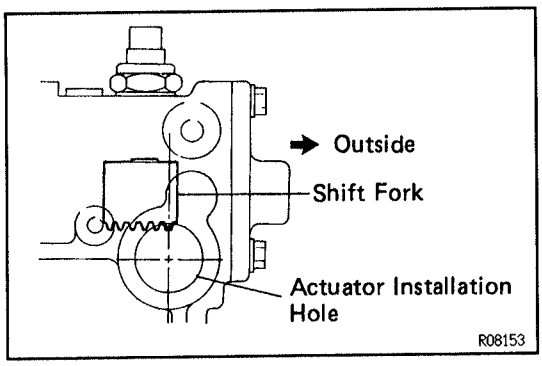

26. INSTALL ACTUATOR

(a) Check that the outermost rack tooth of the shift fork is virtually above the center line of the actuator installation hole.

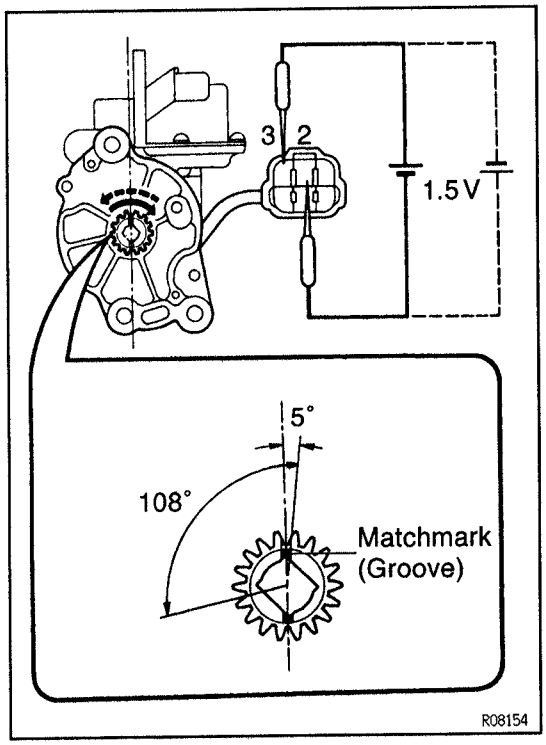

(b) Ensure that the matchmarks of the pinion of the actuator is in the extent between zero and 5 degrees clockwise above the center line of the actuator.
NOTICE:
- **If the matchmarks is not in this extent, rotate the pinion to be matched.**
- **Don't supply the battery positive voltage directly between terminals.**
- **If the matchmarks come to the extension limit of the rotation, don't electrify moreover.**

(c) Install a new O–ring to the actuator.
(d) Apply a light coat of gear oil on the O–ring.
(e) Apply MP grease to the gear part.

SA

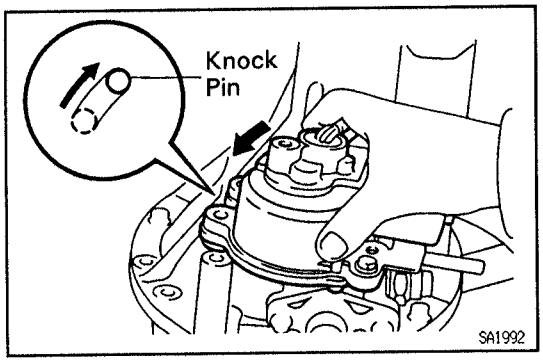

(f) Insert the actuator so that the long hole on the actuator side fits with the knock pin on the carrier side.
HINT: Don't damage the O–ring of the actuator.
(g) Align the actuator with the long hole and rotate the actuator counterclockwise when the knock pin reaches the right–hand side.
(h) Install the actuator to the differential carrier with the bolt so that the outermost rack tooth of the shift fork will fit the matchmarks of the pinion of the actuator.
Torque: 26 N·m (270 kgf·cm, 20 ft·lbf)

DIFFERENTIAL LOCKING SYSTEM

PARTS LOCATION

SA28R-01

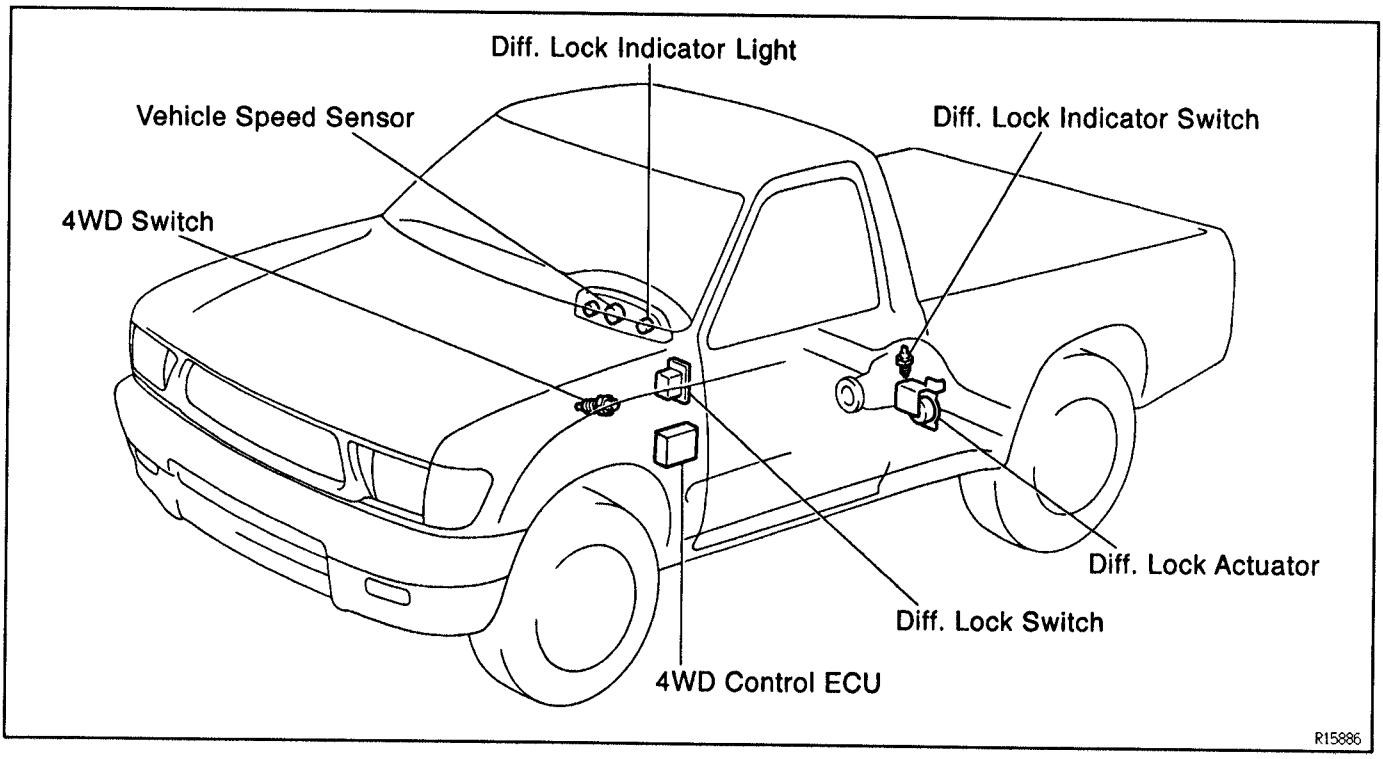

WIRING DIAGRAM

SA28S-01

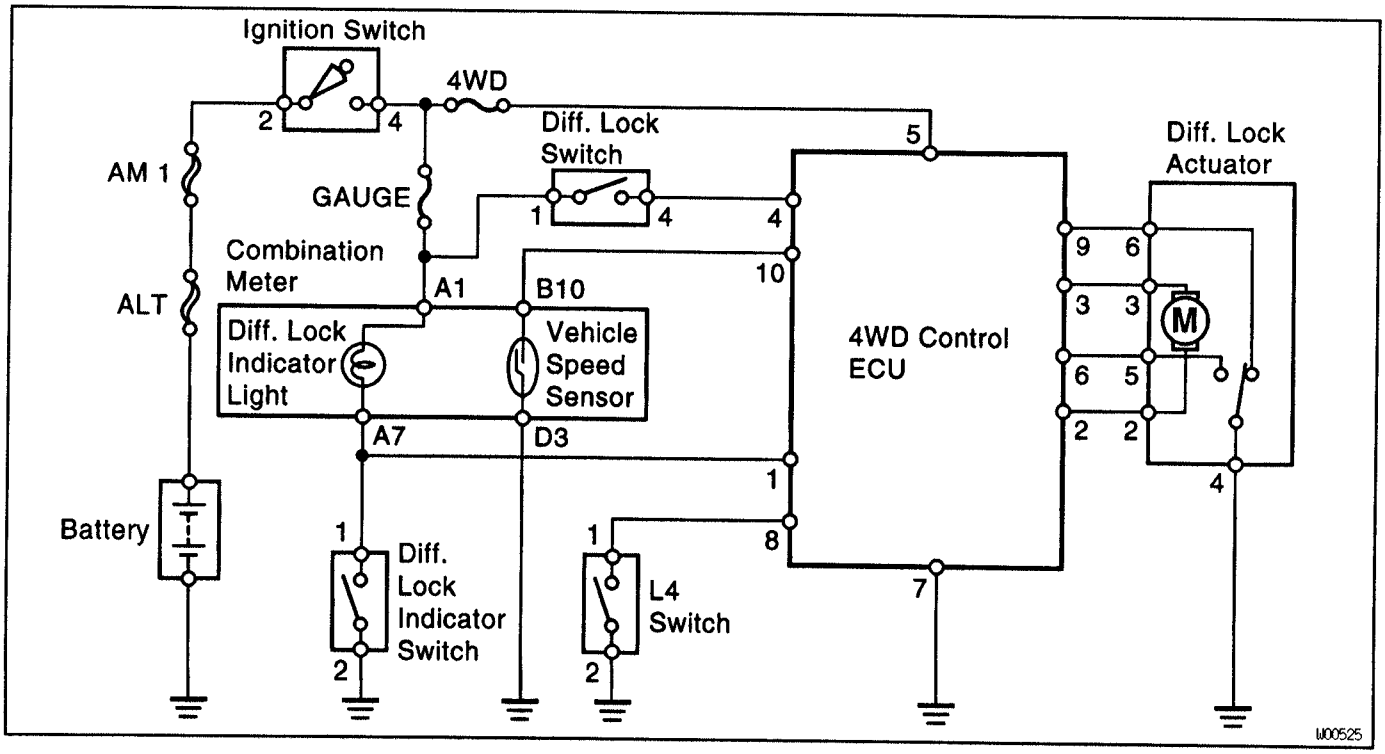

SA28T–01

TROUBLESHOOTING

- **Check that the 4WD mode is set.**
- **When switching differential Free↔Lock, the indicator lamp will blink if the gears of the differential lock sleeve are not meshed. If this occurs, when the tires are rotated to apply differential power to the differential, the differential locks and the indicator lamp light up.**

Problem	Possible cause	Remedy	Page
Indicator lights do not light up.	Fusible link blown	Replace fusible link	
	GAUGE fuse blown	Replace fuse and check for short	
	Bulb burned out	Replace bulb	
	Wiring or ground faulty	Repair as necessary	
Indicator lights do not light up (Differential lock control switch ON)	4WD fuse blown	Replace fuse and check for short	
	Differential lock control switch	Check switch	SA-153
	4WD control ECU faulty	Check ECU	SA-152
	Wiring or ground faulty	Repair as necessary	
DIFF LOCK does not operate	Differential lock indicator switch faulty	Check switch	SA-153
	Differential lock actuator faulty	Check actuator	SA-153
	4WD control ECU faulty	Check ECU	SA-152
	Differential carrier faulty	Repair as necessary	
	Wiring or ground faulty	Repair as necessary	
After DIFF LOCK, lock not released when vehicle speed higher than approx. 8 km/h (5 mph).	Speed sensor faulty	Check sensor	BE-36
	4WD control ECU faulty	Check ECU	SA-152
	Wiring or ground faulty	Repair as necessary	

V07041

SA

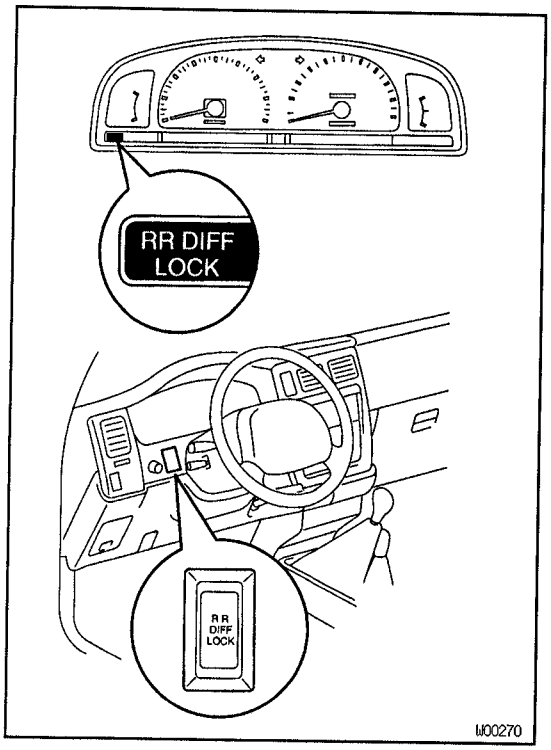

SYSTEM INSPECTION

SA28U-01

1. INSPECT INDICATOR LIGHT

Check that the indicator light light up for approx. 1 second when the ignition switch is turned ON.

2. INSPECT DIFFERENTIAL LOCK OPERATION

(a) Jack up the vehicle then start the engine.

(b) Shift the transfer shift lever to 4WD position.

(c) When the Diff. lock control switch is set to ON position, the indicator light is turned on.
Differential lock is applied to the rear wheel at this time.
HINT: If the gears of the differential lock system are not meshed, the indicator light remains blinking, so rotate the tires to mesh the gear.

(d) When the Diff. lock control switch is at OFF position, the indicator light goes off.
Differential lock is released for the rear wheel at this time.

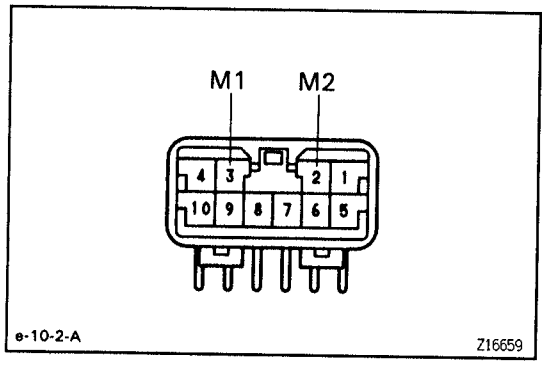

(e) Check the voltage between the terminals of the 4WD control ECU when switching the Diff. lock control switch with the speedometer, registering approx. 8 km/h (5 mph) or more.

Swith position	Terminal	Specified value
ON	M1 – M2	0.5V or less (No change)

(f) Check that the indicator lights blink when 2WD mode is set.
Diff. lock is released for both the rear wheels at this time.

(g) Return the Diff. lock control switch to OFF.

(h) Stop the engine and lower the vehicle.

SA

DIFF. LOCK SYSTEM CIRCUIT INSPECTION

SA28V-01

1. INSPECT BATTERY POSITIVE VOLTAGE

Battery positive voltage:

10–14 V

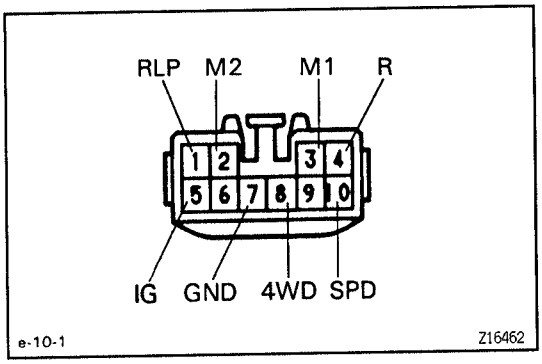

2. INSPECT SYSTEM CIRCUIT WITH CONNECTOR DISCONNECTED

Disconnect the connector from the 4WD control ECU and inspect the connector on the wire harness side, as shown in the chart.

Trouble Part	Tester Connection	Check Item	Condition		Specified Valve
RR Differential Lock Actuator	M1 – M2	Resistance	–		Less than 100 Ω
Body Ground	GND – Body ground	Cotinuity			Continuity
Speed Sensor	SPD – Body ground		Vehicle moves slowly		1 pulse each 40 cm (15.75 in.)
4WD Fuse	IG – Body ground	Voltage	Ignition Switch ON	–	10 -14 V
Rear Differential Lock Indicator Switch	RLP – Body ground			Indicator light ON	About 0 V
				Indicator light OFF	10 -14 V
4WD Indicator Switch	4WD – Body ground			Indicator light ON	About 0 V
				Indicator light OFF	10 -14 V
Differential Lock Control Switch	R – Body ground			Differential lock Control Switch OFF	10 -14 V
				Differential lock Control Switch OFF	About 0 V

V07042

SA

HINT: If the circuit is not as specified, check and repair or replace the trouble part shown in the table above.

3. INSPECT SYSTEM CIRCUIT WITH CONNECTOR CONNECTED

(a) Turn the ignition switch to ON position.
(b) Keep the center Diff. lock condition.
(c) Remove the Diff. lock ECU.
(d) Using a voltmeter, measure the voltage when the differential lock control switch is in the position, as shown below.

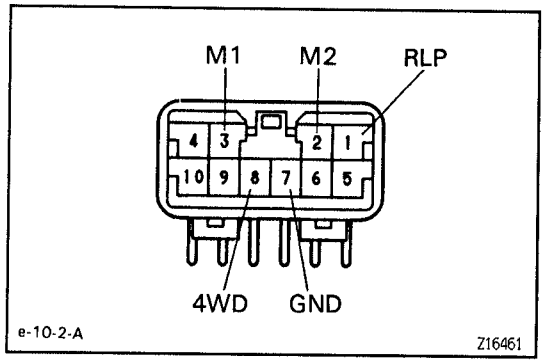

Tester Connection ⊕ – ⊖	Switch position	Specified valve
4WD – GND	–	
RLP – GND	ON	0.5 V or less ↓ 10 -14 V (Approx. 1 sec.) ↓ 0.5 V or less
M1 – M2	OFF – ON	
M2 – M1	ON – OFF	

V07044

If the circuit is not as specified, replace the ECU.

(e) Install the ECU in place.

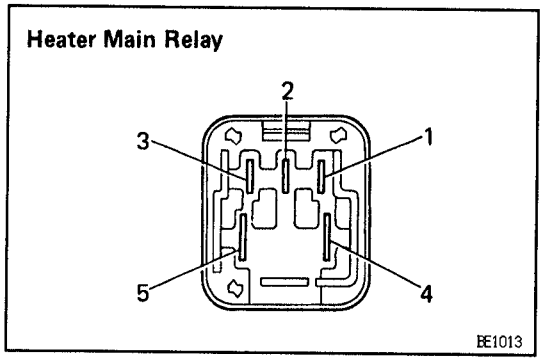

DIFF. LOCK COMPONENTS INSPECTION SA28W-01

1. INSPECT RELAY OPERATION

(a) Jack up the vehicle.

(b) Use a heater main relay and connect it, as shown below.

(c) Rotate the tire and check that differential lock has occurred.

If operation is not as specified, replace the actuator.

SA

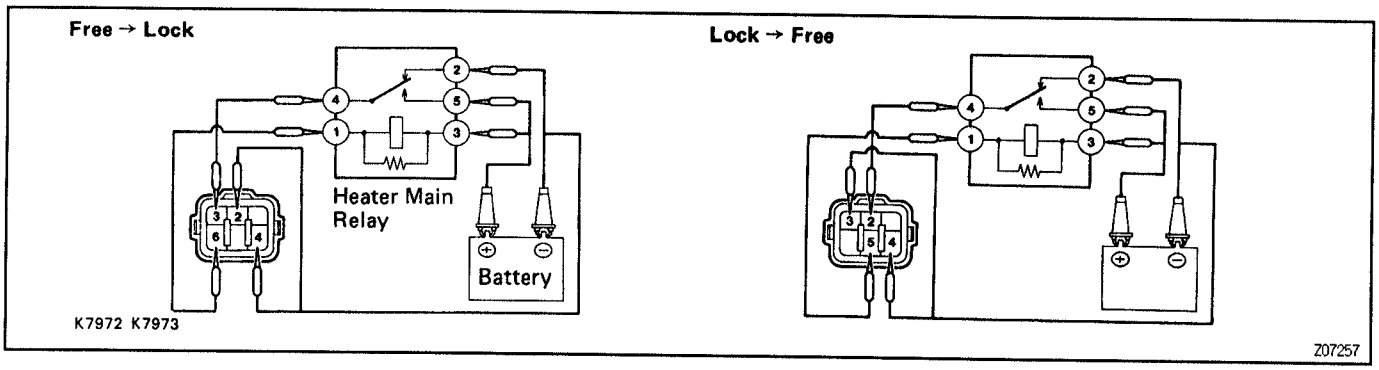

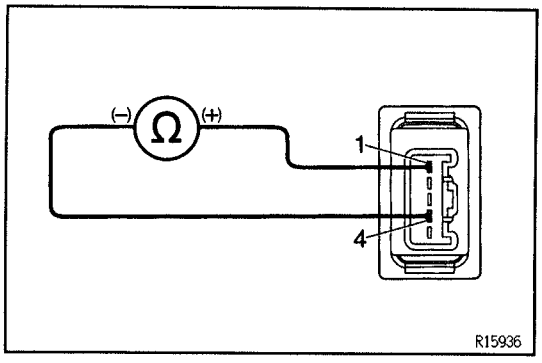

2. INSPECT DIFF. LOCK CONTROL SWITCH CONTINUITY

Inspect the switch continuity between terminal1 to terminal4.

HINT: If it is not continuity, replace the switch.

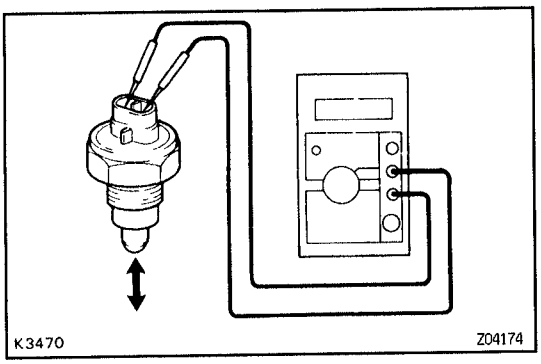

3. **INSPECT DIFF. LOCK POSITION SWITCH**

(a) Check that there is continuity between terminals when the switch is pushed (differential connected position).

(b) Check that there is no continuity when the switch is free (differential disconnected position).

HINT: If operation is not as specified, replace the switch.

4. **INSPECT TRANSFER 4WD SWITCH**
(See page TR–20)

5. **INSPECT VEHICLE SPEED SENSOR**
(See page BE–36)

DIFF. LOCK ACTUATOR REMOVAL AND INSTALLATION SA28X-01

(See page SA–135, 148)

SA

REAR SUSPENSION

PREPARATION

SST (SPECIAL SERVICE TOOLS)

SA1VZ–01

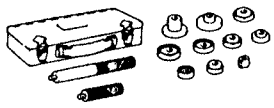	09550–10012 Replacer Set "B"	Eye bushing replacement
	(09252–10010) No. 1 Replacer Handle–	
	(09553–10010) Differential Side Bearing Replacer	

EQUIPMENT

SA0L4–07

Torque wrench	

SA

REAR SHOCK ABSORBER
COMPONENTS

SA0L7-06

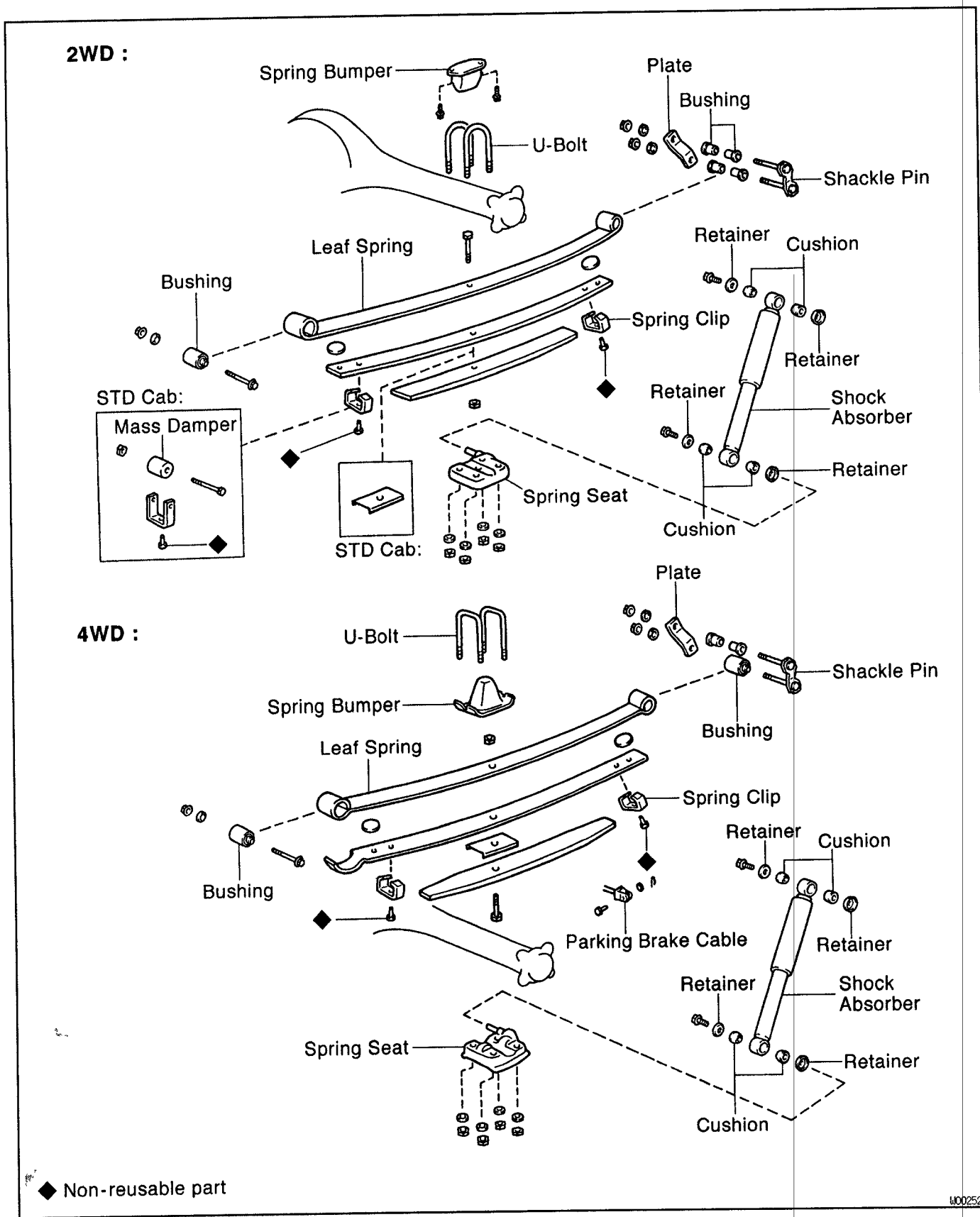

REAR SHOCK ABSORBER REMOVAL

SA1W0-04

1. **SUPPORT BODY WITH STANDS**

(a) Jack up and support the body on stands.

(b) Lower the axle housing until the leaf spring tension is free, and keep it at this position.

2. **REMOVE REAR SHOCK ABSORBER**

(a) Remove the 2 rear shock absorber set bolts.

Torque:

2WD 26 N·m (260 kgf·cm, 19 ft·lbf)

4WD 71 N·m (730 kgf·cm, 53 ft·lbf)

(b) Remove the rear shock absorber.

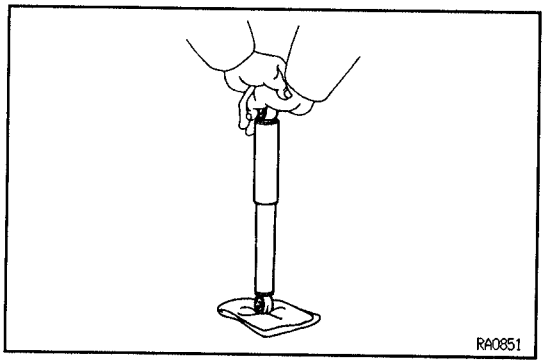

RA0851

REAR SHOCK ABSORBER INSPECTION

SA091-06

INSPECT SHOCK ABSORBER

Compress and extend the shock absorber rod and check that there is no abnormal resistance or unusual operation sounds.

If there is any abnormality, replace the shock absorber with a new one.

NOTICE: When discarding the shock absorber, use the following procedure.

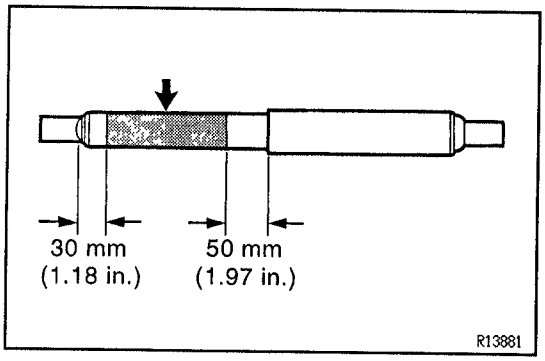

R13881

REAR SHOCK ABSORBER DISPOSAL

SA09U-06

1. **FULLY EXTEND SHOCK ABSORBER ROD**
2. **DRILL HOLE TO REMOVE GAS FROM CYLINDER**

Using a drill, make a hole in the cylinder, as shown to remove the gas inside.

CAUTION: The gas coming out is harmless, but be careful of chips which may fly up when drilling.

REAR SHOCK ABSORBER INSTALLATION

SA26L-01

Installation is in the reverse order of removal.

SA

REAR LEAF SPRING

SA28M-01

COMPONENTS

(See page SA–156)

SA28N-01

REAR LEAF SPRING REMOVAL

1. **SUPPORT BODY**

(a) Jack up and support the body on stands.

(b) Lower the axle housing until the leaf spring tension is free, and keep it at this position.

2. **REMOVE REAR WHEEL**

Torque: 110 N·m (1,150 kgf·cm, 83 ft·lbf)

3. **4WD:**
DISCONNECT PARKING BRAKE CABLE

4. **DISCONNECT REAR SHOCK ABSORBER**

Remove the bolt and disconnect the shock absorber from the spring seat.

Torque:

2WD 26 N·m (260 kgf·cm, 19 ft·lbf)

4WD 71 N·m (730 kgf·cm, 53 ft·lbf)

SA

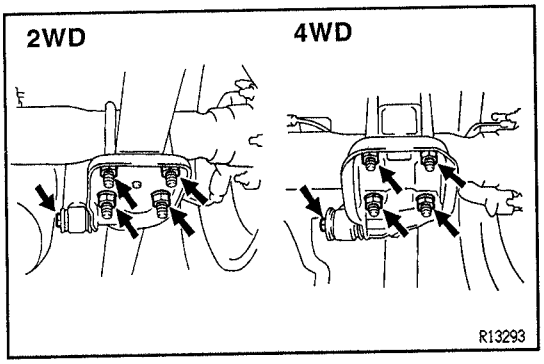

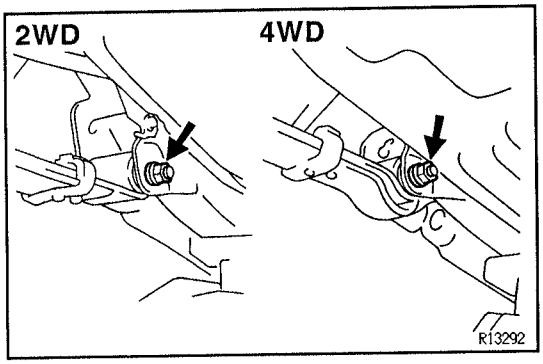

5. **REMOVE U–BOLTS**

(a) Remove the 4 U–bolt mounting nuts.

(b) Remove the spring seat, pads and pad retainer.

(c) Remove the U–bolts.

Torque: 120 N·m (1,250 kgf·cm, 90 ft·lbf)

INSTALLATION HINT: Tighten the U–bolts so that the length of all the U–bolts under the spring seat are the same.

(d) 4WD:
Remove the spring bumper.

6. **REMOVE LEAF SPRING**

(a) Remove the nut, washer and hanger pin bolt.

Torque: 155 N·m (1,600 kgf·cm, 115 ft·lbf)

INSTALLATION HINT: After stabilizing the suspension, torque the nut.

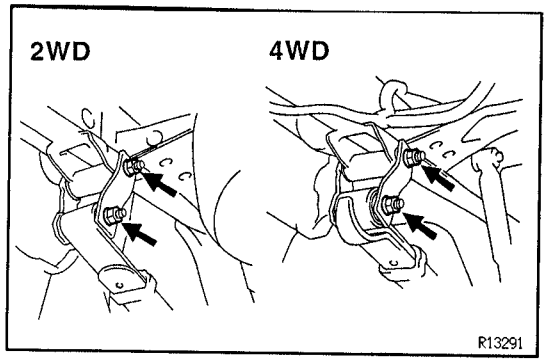

(b) Remove the 2 shackle pin mounting nuts.
Torque: 91 N·m (930 kgf·cm, 67 ft·lbf)
INSTALLATION HINT: After stabilizing the suspension, torque the nut.

(c) Remove the shackle pin and plate, and remove the rear leaf spring.

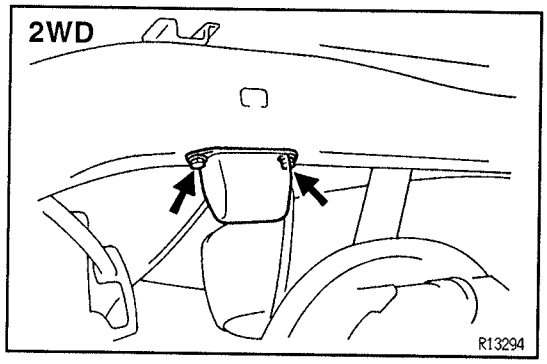

7. 2WD:
REMOVE SPRING BUMPER
Torque: 29 N·m (300 kgf·cm, 22 ft·lbf)

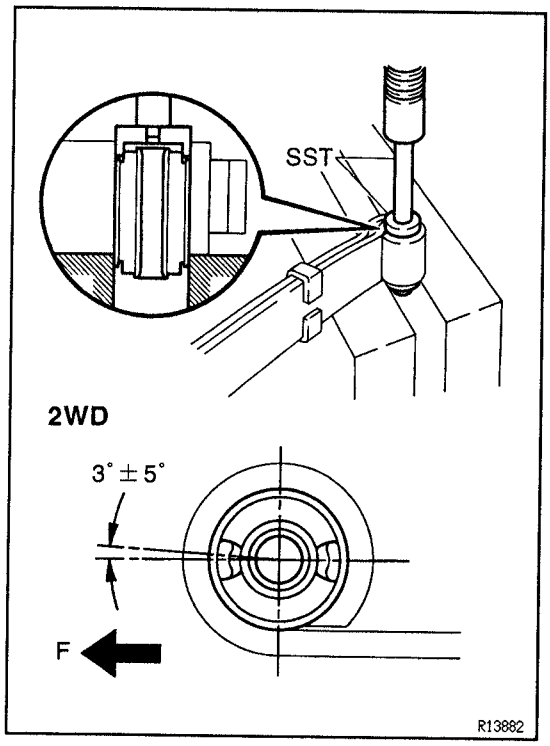

EYE BUSHING REPLACEMENT

SA0LG-06

REPLACE BUSHING
Using SST and a press, replace the eye bushing.
SST 09550–10012 (09252–10010, 09553–10010)

SA

2WD:
When installing the bushing, as shown in the illustration.

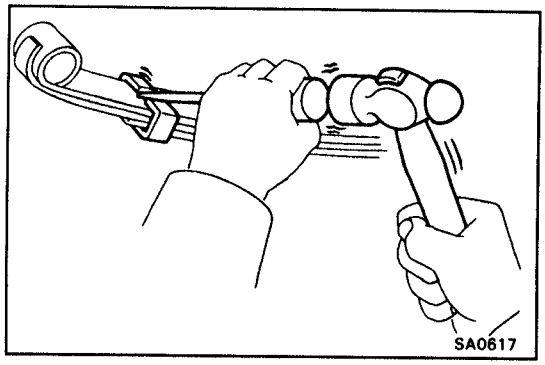

LEAF SPRING REPLACEMENT

SA0GY-06

1. BEND OPEN SPRING CLIP
Using a chisel and a hammer, pry up the spring clip.

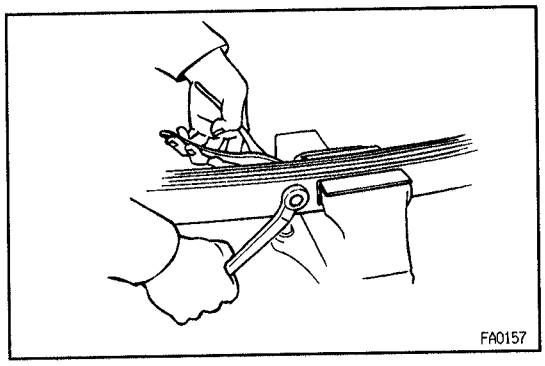

2. REMOVE CENTER BOLT

Hold the spring near the center bolt in a vise and remove the center bolt.

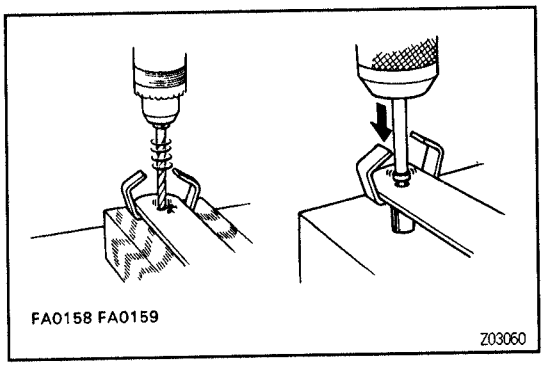

3. REPLACE SPRING CLIP

(a) Drill off the head of the rivet and drive it out.

(b) Install a new rivet into the holes of the spring leaf and clip. Then rivet with a press.

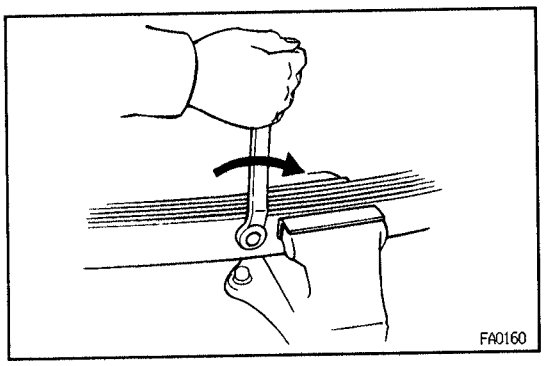

4. INSTALL SPRING CENTER BOLT

(a) Align the leaf holes and secure the leaves with a vise.

(b) Install the spring center bolt.

Torque: 44 N·m (450 kgf·cm, 33 ft·lbf)

SA

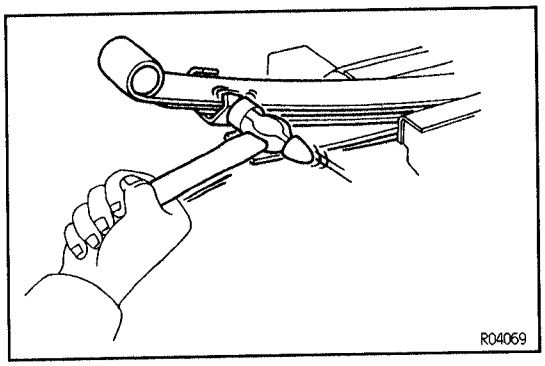

5. BEND SPRING CLIP

Using a hammer, bend the spring clip into the position.

SA28P–01

REAR LEAF SPRING INSTALLATION

Installation is in the reverse order of removal.

SERVICE SPECIFICATIONS

SERVICE DATA

SA1VY-02

2WD:

<table>
<tr><td rowspan="3">Cold tire inflation pressure</td><td colspan="2">Tire size</td><td colspan="2">Front</td><td colspan="2">Rear</td></tr>
<tr><td colspan="2">P195/75R14</td><td colspan="2" rowspan="2">200 kPa (2.0 kgf/cm², 29 psi)</td><td colspan="2">240 kPa (2.4 kgf/cm², 35psi)</td></tr>
<tr><td colspan="2">P215/70R14</td><td colspan="2">200 kPa (2.0 kgf/cm², 29psi)</td></tr>
<tr><td rowspan="15">Wheel alignment (Standard loaded vehicle condition)</td><td colspan="4" rowspan="2">Vehicle height mm (in.)
A: Ground clearance of spindle center.
B: Ground clearance of lower suspensiom arm bolt center.
C: Ground clearance of rear axle shaft center.
D: Ground clearance of leaf spring front hanger pin center.</td><td>Front A-B</td><td>Rear C-D</td></tr>
<tr><td>56 (2.205)</td><td>108 (4.252)</td></tr>
<tr><td colspan="2">Camber</td><td colspan="3">0°00' ± 45'</td></tr>
<tr><td></td><td>Left-right error</td><td colspan="3">30' or less</td></tr>
<tr><td colspan="2">Caster</td><td colspan="3">1°50' ± 45'</td></tr>
<tr><td></td><td>Left-right error</td><td colspan="3">30' or less</td></tr>
<tr><td colspan="2">Steering axis inclination</td><td colspan="3">10°00' ± 45'</td></tr>
<tr><td></td><td>Left-right error</td><td colspan="3">30' or less</td></tr>
<tr><td colspan="2">Toe-in (total)</td><td colspan="3">0° ± 0.2° (0 ± 2 mm, 0 ± 0.08 in.)</td></tr>
<tr><td></td><td>Tie rod end left-right error</td><td colspan="3">1.5 mm (0.059 in.)</td></tr>
<tr><td rowspan="2">Wheel angle (Max.)</td><td>Inside wheel</td><td colspan="3">36°00' $^{+0°}_{-3°}$</td></tr>
<tr><td>Outside wheel</td><td colspan="3">30°45' $^{+0°}_{-3°}$</td></tr>
<tr><td rowspan="15">Wheel alignment (Non-loaded vehicle condition)</td><td colspan="3" rowspan="4">Vehicle height mm (in.)
A: Ground crearance of spindle center.
B: Ground clearance of lower suspension arm bolt center.
C: Ground clearance of rear axle shaft center.
D: Ground clearance of leaf spring front hanger pin center.</td><td>Model</td><td>Front A-B</td><td>Rear C-D</td></tr>
<tr><td>RZN140L</td><td>44 mm (1.732 in.)</td><td>61 mm (2.402 in.)</td></tr>
<tr><td>RZN150L</td><td>43 mm (1.693 in.)</td><td>68 mm (2.677 in.)</td></tr>
<tr><td>VZN150</td><td>43 mm (1.693 in.)</td><td>61 mm (2.402 in.)</td></tr>
<tr><td colspan="2">Camber</td><td colspan="3">0°04' ± 45'</td></tr>
<tr><td></td><td>Left-right error</td><td colspan="3">30' or less</td></tr>
<tr><td colspan="2" rowspan="4">Caster</td><td>Model</td><td colspan="2">Caster</td></tr>
<tr><td>RZN140L</td><td colspan="2">0°33' ± 45'</td></tr>
<tr><td>RZN150L</td><td colspan="2">0°50' ± 45'</td></tr>
<tr><td>VZN150L</td><td colspan="2">0°42' ± 45'</td></tr>
<tr><td></td><td>Left-right error</td><td colspan="3">30' or less</td></tr>
<tr><td colspan="2">Steering axis inclination</td><td colspan="3">9°56' ± 45'</td></tr>
<tr><td></td><td>Left-right error</td><td colspan="3">30' or less</td></tr>
<tr><td colspan="2">Toe-in (total)</td><td colspan="3">0.2° ± 0.2° (2 ± 2 mm, 0.08 ± 0.08 in.)</td></tr>
<tr><td></td><td>Tie rod end left-right error</td><td colspan="3">1.5 mm (0.059 in.)</td></tr>
<tr><td rowspan="2">Wheel angle (Max.)</td><td>Inside wheel</td><td colspan="3">36°14' $^{+0°}_{-3°}$ (reference)</td></tr>
<tr><td>Outside wheel</td><td colspan="3">31°03' $^{+0°}_{-3°}$ (reference)</td></tr>
<tr><td>Front axle</td><td colspan="2">Axle hub axial play</td><td colspan="3">Maximum 0.05 mm (0.0020 in.)</td></tr>
<tr><td colspan="2">Axle hub preload (at starting)</td><td colspan="3">Oil seal frictional force plus
6 - 18 N (0.6 - 1.8 kgf, 1.3 - 4.0 lbf)</td></tr>
</table>

SA

2WD:

Front suspension	Upper ball joint turning torque	0.5 - 3.5 N·m (5 - 35 kgf·cm, 4 - 30 in.·lbf)
	Lower ball joint turning torque	0.5 - 3.5 N·m (5 - 35 kgf·cm, 4 - 30 in.·lbf)
Rear axle	Shaft runout	Maximum 2.0 mm (0.079 in.)
	Flange runout	Maximum 0.1 mm (0.004 in.)

4WD:

Cold tire inflation pressure	Tire size	Front	Rear	
	P225/75R15 31 x 10.5R15LT	180 kPa (1.8 kgf/cm^2, 26 psi)	200 kPa (2.0 kgf/cm^2, 29 psi)	
Wheel alignment (Standard loaded vehicle condition)	Vehicle height mm (in.) A: Ground crearance of spindle center. B: Ground clearance of front adjusting cam bolt center. C: Ground clearance of leaf spring front hanger pin center. D: Ground clearance of rear axle shaft center.		Front A-B	Rear C-D
			56.9 (2.240)	-5 (-0.197)
	Camber		0°00' ± 45'	
		Left-right error	30' or less	
	Caster		2°50' ± 45'	
		Left-right error	30' or less	
	Steering axis inclination		10°45' ± 45'	
		Left-right error	30' or less	
	Toe-in (total)		0° ± 0.2° (0 ± 2 mm, 0 ± 0.08 in.)	
	Wheel angle (Max.)	Inside wheel	37° 05' $^{+0°}_{-2°}$	
		Outside wheel	32° 20'	

Wheel alignment (Non-loaded vehicle condition)	Vehicle height mm (in.) A: Ground clearance of spindle center. B: Ground clearance of front adjusting cam bolt center. C: Ground clearance of leaf spring front hanger pin center. D: Ground clearance of rear axle shaft center.	Model	Front A-B	Rear C-D
		RZN161L-TRMDKAB	50.1 (1.972)	36 (1.417)
		-TRPDKAB	48.4 (1.906)	36 (1.417)
		VZN160L-TRMDKAB	50.0 (1.969)	37 (1.457)
		RZN171L-CRMDKAB	46.0 (1.811)	29 (1.142)
		-CRPDKAB	44.4 (1.748)	29 (1.142)
		VZN170L-CRMDKAB	45.3 (1.783)	30 (1.181)
		-CRPDKAB	46.1 (1.815)	30 (1.181)
		-CRMGKAB	44.9 (1.768)	30 (1.181)
		-CRPGKAB	42.8 (1.685)	30 (1.181)
	Camber	Model	Camber	
		RZN161L-TRMDKAB	0°10'±45'	
		-TRPDKAB	0°11'±45'	
		VZN160L-TRMDKAB	0°10'±45'	
		RZN171L-CRMDKAB	0°13'±45'	
		-CRPDKAB	0°14'±45'	
		VZN170L-CRMDKAB	0°13'±45'	
		-CRPDKAB	0°12'±45'	
		-CRMGKAB	0°13'±45'	
		-CMPGKAB	0°15'±45'	
	Left-right error		30' or less	

SA

Y

V07140

4WD:

Wheel alignment (Non-loaded vehicle condition)

Caster

Model	Caster
RZN161L-TRMDKAB	1°57'±45'
-TRPDKAB	1°57'±45'
VZN160L-TRMDKAB	1°59'±45'
RZN171L-CRMDKAB	2°13'±45'
-CRPDKAB	2°13'±45'
VZN170L-CRMDKAB	2°19'±45'
-CRPDKAB	2°20'±45'
-CRMGKAB	2°18'±45'
-CRPGKAB	2°17'±45'

Left-right error: 30' or less

Steering axis inclination

Model	Steering axis inclination
RZN161L-TRMDKAB	10°35'±45'
-TRPDKAB	10°34'±45'
VZN160L-TRMDKAB	10°35'±45'
RZN171L-CRMDKAB	10°32'±45'
-CRPDKAB	10°31'±45'
VZN170L-CRMDKAB	10°32'±45'
-CRPDKAB	10°33'±45'
-CRMGKAB	10°32'±45'
-CRPGKAB	10°30'±45'

Left-right error: 30' or less

Toe-in (total)

Model	Tire size	Toe-in (total)
RZN161L-TRMDKAB	P225/75R15	0.1°±0.2°(1.4±2mm,0.055±0.079in.)
	31 x 10.5R15	0.1°±0.15°(1.5±2mm,0.059±0.079in.)
-TRPDKAB	P225/75R15	0.1°±0.2°(1.6±2mm,0.063±0.079in.)
	31 x 10.5R15	0.1°±0.15°(1.8±2mm,0.071±0.079in.)
VZN160L-TRMDKAB	P225/75R15	0.1°±0.2°(1.4±2mm,0.055±0.079in.)
	31 x 10.5R15	0.1°±0.15°(1.5±2mm,0.059±0.079in.)
RZN171L-CRMDKAB	P225/75R15	0.1°±0.2°(1.7±2mm,0.067±0.079in.)
	31 x 10.5R15	0.1°±0.15°(1.9±2mm,0.075±0.079in.)
-CRPDKAB	P225/75R15	0.2°±0.2°(1.9±2mm,0.075±0.079in.)
	31 x 10.5R15	0.2°±0.15°(2.2±2mm,0.087±0.079in.)
VZN170L-CRMDKAB	P225/75R15	0.1°±0.2°(1.8±2mm,0.071±0.079in.)
	31 x 10.5R15	0.15°±0.15°(2.0±2mm,0.079±0.079in.)
-CRPDKAB	P225/75R15	0.1°±0.2°(1.7±2mm,0.067±0.079in.)
	31 x 10.5R15	0.1°±0.15°(1.8±2mm,0.071±0.079in.)
-CRMGKAB	P225/75R15	0.1°±0.2°(1.8±2mm,0.071±0.079in.)
	31 x 10.5R15	0.15°±0.15°(2.0±2mm,0.079±0.079in.)
-CRPGKAB	P225/75R15	0.2°±0.2°(2.1±2mm,0.083±0.079in.)
	31 x 10.5R15	0.2°±0.15°(2.3±2mm,0.079±0.079in.)

Y

4WD:

Wheel alignment (Non-loaded vehicle condition)	Wheel angle (Max.)	Model	Inside wheel	Outside wheel
		RZN161L-TRMDKAB	37°16'	32°35'
		-TRPDKAB	37°18'	32°34'
		VZN160L-TRMDKAB	37°16'	32°35'
		RZN171L-CRMDKAB	37°19'	32°32'
		-CRPDKAB	37°21'	32°31'
		VAN170L-CRMDKAB	37°20'	32°32'
		-CRPDKAB	37°19'	32°33'
		-CRMGKAB	37°20'	32°32'
		-CRPGKAB	37°23'	32°29'
Drive shaft	Dive shaft length		436.4 ± 2 mm (17.182 ± 0.079 in)	
Front suspention	Upper ball joint turning torque		0.7 - 4.4 N·m (7 - 45 kgf·cm, 6 - 39 in.·lbf)	
	Lower ball joint turning torque		0.5 - 3.9 N·m (5 - 40 kgf·cm, 4 - 35 in.·lbf)	
Rear axle	Shaft runout		Maximum 2.0 mm (0.079 in.)	
	Flange runout		Maximum 0.1 mm (0.004 in.)	

V07142

SA

Front differential:

Front differential	Companion flange vertical runout		Maximum 0.10 mm (0.0039 in.)	
	Companion flange lateral runout		Maximum 0.10 mm (0.0039 in.)	
	Drive pinion preload (at starting)	New bearing	1.2 – 1.9 N·m (12 – 19 kgf·cm, 10.4 – 16.5 in.-lbf)	
		Reused bearing	0.6 – 1.0 N·m (6 – 10 kgf·cm, 5.2 – 8.7 in.-lbf)	
	Total preload (at starting)		In addition to drive pinion preload 0.4 – 0.6 N·m (6 – 10 kgf·cm, 10.4 – 16.5 in.·lbf)	
	Drive pinion to ring gear backlash		0.10 – 0.18 mm (0.0039 – 0.0071 in.)	
	Side gear backlash		0 – 0.20 mm (0 – 0.0079 in.)	
	Rear oil seal drive in depth		4.5 ± 0.3 mm (0.177 ± 0.012 in.)	
	Side oil seal drive in depth		0 ± 0.3 mm (0 ± 0.012 in.)	
	Side tube oil seal drive in depth		5.5 ± 0.3 mm (0.217 ± 0.012 in.)	
	Side gear thrust washer thickness mm (in.)			
	0.96 – 1.04 (0.0378 – 0.0409)		1.16 – 1.24 (0.0457 – 0.0488)	
	1.06 – 1.14 (0.0417 – 0.0449)		1.26 – 1.34 (0.0496 – 0.0528)	
	Side bearing adjusting washer thickness mm (in.)			
	2.00 – 2.02 (0.0787 – 0.0795)	2.27 – 2.29 (0.0894 – 0.0902)	2.54 – 2.56 (0.1000 – 0.1008)	
	2.03 – 2.05 (0.0799 – 0.0807)	2.30 – 2.32 (0.0906 – 0.0913)	2.57 – 2.59 (0.1012 – 0.1020)	
	2.06 – 2.08 (0.0811 – 0.0819)	2.33 – 2.35 (0.0917 – 0.0925)	2.60 – 2.62 (0.1024 – 0.1031)	
	2.09 – 2.11 (0.0823 – 0.0831)	2.36 – 2.38 (0.0929 – 0.0937)	2.63 – 2.65 (0.1035 – 0.1043)	
	2.12 – 2.14 (0.0835 – 0.0843)	2.39 – 2.41 (0.0941 – 0.0949)	2.66 – 2.68 (0.1047 – 0.1055)	
	2.15 – 2.17 (0.0846 – 0.0854)	2.42 – 2.44 (0.0953 – 0.0961)	2.69 – 2.71 (0.1059 – 0.1067)	
	2.18 – 2.20 (0.0858 – 0.0866)	2.45 – 2.47 (0.0965 – 0.0972)	2.72 – 2.74 (0.1071 – 0.1079)	
	2.21 – 2.23 (0.0870 – 0.0878)	2.48 – 2.50 (0.0976 – 0.0984)	2.75 – 2.77 (0.1083 – 0.1091)	
	2.24 – 2.26 (0.0882 – 0.0890)	2.51 – 2.53 (0.0988 – 0.0996)	2.78 – 2.80 (0.1094 – 0.1102)	
	Drive pinion bearing adjusting washer thickness mm (in.)			
	1.69 – 1.71 (0.0665 – 0.0673)	1.93 – 1.95 (0.0760 – 0.0768)	2.17 – 2.19 (0.0854 – 0.0862)	
	1.72 – 1.74 (0.0677 – 0.0685)	1.96 – 1.98 (0.0772 – 0.0780)	2.20 – 2.22 (0.0866 – 0.0874)	
	1.75 – 1.77 (0.0689 – 0.0697)	1.99 – 2.01 (0.0783 – 0.0791)	2.23 – 2.25 (0.0878 – 0.0886)	
	1.78 – 1.80 (0.0701 – 0.0709)	2.02 – 2.04 (0.0795 – 0.0803)	2.26 – 2.28 (0.0890 – 0.0898)	
	1.81 – 1.83 (0.0713 – 0.0720)	2.05 – 2.07 (0.0807 – 0.0815)	2.29 – 2.31 (0.0902 – 0.0909)	
	1.84 – 1.86 (0.0724 – 0.0732)	2.08 – 2.10 (0.0819 – 0.0827)	2.32 – 2.34 (0.0913 – 0.0921)	
	1.87 – 1.89 (0.0736 – 0.0744)	2.11 – 2.13 (0.0831 – 0.0839)	–	
	1.90 – 1.92 (0.0748 – 0.0756)	2.14 – 2.16 (0.0843 – 0.0850)	–	
	w/A.D.D.	A.D.D. sleeve fork to clutch sleeve clearance	0.35 mm (0.0138 in.)	
		Differential case needle bearing press in depth	0.3 ± 0.3 mm (0.012 ± 0.012 in.)	

V06563

SA

Rear differential (2RZ-FE):

Differential	Drive pinion preload (at starting)	New bearing	1.4 - 2.1 N·m (14 - 21 kgf·cm, 12.2 - 18.3 in.·lbf)
		Reused bearing	0.6 - 1.0 N·m (6 - 10 kgf·cm, 5.2 - 8.7 in.·lbf)
	Total preload (at starting)		(Add drive pinion preload) 0.4 - 0.6 N·m (4 - 6 kgf·cm, 3.5 - 5.2 in.·lbf)
	Drive pinion to ring gear backlash		0.13 - 0.18 mm (0.0051 - 0.0071 in.)
	Side gear backlash		0.05 - 0.20 mm (0.0020 - 0.0079 in.)
	Ring gear runout		Maximum 0.07 mm (0.0028 in.)
	Differential case runout		Maximum 0.07 mm (0.0028 in.)
	Companion flange vertical runout		Maximum 0.10 mm (0.0039 in.)
	Companion flange lateral runout		Maximum 0.10 mm (0.0039 in.)
	Drive pinion oil seal drive in depth		1.5 mm (0.059 in.)

Side gear thrust washer thickness	
1.0 mm (0.039 in.)	1.2 mm (0.047 in.)
1.1 mm (0.043 in.)	1.3 mm (0.051 in.)

Drive pinion bearing washer thickness	
2.24 mm (0.0882 in.)	2.51 mm (0.0988 in.)
2.27 mm (0.0894 in.)	2.54 mm (0.1000 in.)
2.30 mm (0.0906 in.)	2.57 mm (0.1012 in.)
2.33 mm (0.0917 in.)	2.60 mm (0.1024 in.)
2.36 mm (0.0929 in.)	2.63 mm (0.1035 in.)
2.39 mm (0.0941 in.)	2.66 mm (0.1047 in.)
2.42 mm (0.0953 in.)	2.69 mm (0.1059 in.)
2.45 mm (0.0965 in.)	2.72 mm (0.1071 in.)
2.48 mm (0.0976 in.)	—

Rear differential (3RZ-FE, 5VZ-FE w/ Diff. lock):

Differential	Companion flange vertical runout		Maximum 0.10 mm (0.0039 in.)
	Companion flange lateral runout		Maximum 0.10 mm (0.0039 in.)
	Drive pinion preload (at starting)	New bearing	0.9 - 1.6 N·m (10 - 16 kgf·cm, 8.7 - 13.9 in.·lbf)
		Reused bearing	0.5 - 0.8 N·m (5 - 8 kgf·cm, 4.3 - 6.9 in.·lbf)
	Total preload (at starting)		In addition to drive pinion preload 0.4 - 0.6 N·m (4 - 6 kgf·cm, 3.5 - 5.2 in.·lbf)
	Drive pinion to ring gear backlash		0.13 - 0.18 mm (0.0051 - 0.0071 in.)
	Side gear backlash		0.05 - 0.20 mm (0.0020 - 0.0080 in.)
	Oil seal drive in depth		1.0 mm (0.039 in.)

Side gear thrust washer thickness mm (in.)		
0.9 (0.035)	1.0 (0.039)	1.1 (0.043)

Drive pinion bearing adjusting washer thickness mm (in.)			
1.70 (0.0669)	1.88 (0.0740)	2.06 (0.0811)	2.24 (0.0882)
1.73 (0.0681)	1.91 (0.0752)	2.09 (0.0823)	2.27 (0.0894)
1.76 (0.0693)	1.94 (0.0764)	2.12 (0.0835)	2.30 (0.0906)
1.79 (0.0705)	1.97 (0.0776)	2.15 (0.0846)	2.33 (0.0917)
1.82 (0.0717)	2.00 (0.0787)	2.18 (0.0858)	—
1.85 (0.0728)	2.03 (0.0799)	2.21 (0.0870)	—

Y

V07074

Rear differential (3RZ–FE, 5VZ–FE w/o Diff. lock):

Differential	Companion flange vertical runout		Maximum 0.09 mm (0.0035 in.)			
	Companion flange lateral runout		Maximum 0.09 mm (0.0035 in.)			
	Ring gear runout		Maximum 0.05 mm (0.0020 in.)			
	Differential case runout		Maximum 0.04 mm (0.0016 in.)			
	Drive pinion to ring gear backlash		0.13 – 0.18 mm (0.0051 – 0.0709 in.)			
	Side gear backlash		0.05 – 0.20 mm (0.0020 – 0.0079 in.)			
	Drive pinion preload (at starting)	New bearing	1.0 – 1.6 N·m (10 – 16 kgf·cm, 8.7 – 13.9 in.-lbf)			
		Reused bearing	0.5 – 0.8 N·m (5 – 8 kgf·cm, 4.3 – 6.9 in.-lbf)			
	Total preload (at starting)		(Add drive pinion preload) 0.4 – 0.6 N·m (4 – 6 kgf·cm, 3.5 – 5.2 in.-lbf)			
	Side gear thrust washer thickness mm (in.)					
	1.50 (0.0590)		1.65 (0.0650)		1.80 (0.0709)	
	1.55 (0.0610)		1.70 (0.0669)		1.85 (0.0728)	
	1.60 (0.0630)		1.75 (0.0689)		1.90 (0.0748)	
	Side bearing adjusting washer thickness mm (in.)					
	58	2.58 (0.1015)	90	2.90 (0.1142)	22	3.22 (0.1268)
	60	2.60 (0.1024)	92	2.92 (0.1150)	24	3.24 (0.1276)
	62	2.62 (0.1031)	94	2.94 (0.1157)	26	3.26 (0.1283)
	64	2.64 (0.1039)	96	2.96 (0.1165)	28	3.28 (0.1291)
	66	2.66 (0.1047)	98	2.98 (0.1173)	30	3.30 (0.1299)
	68	2.68 (0.1055)	00	3.00 (0.1181)	32	3.32 (0.1307)
	70	2.70 (0.1063)	02	3.02 (0.1189)	34	3.34 (0.1315)
	72	2.72 (0.1071)	04	3.04 (0.1197)	36	3.36 (0.1323)
	74	2.74 (0.1079)	06	3.06 (0.1205)	38	3.38 (0.1331)
	76	2.76 (0.1087)	08	3.08 (0.1213)	40	3.40 (0.1339)
	78	2.78 (0.1094)	10	3.10 (0.1220)	42	3.42 (0.1346)
	80	2.80 (0.1102)	12	3.12 (0.1228)	44	3.44 (0.1354)
	82	2.82 (0.1110)	14	3.14 (0.1236)	46	3.46 (0.1362)
	84	2.84 (0.1118)	16	3.16 (0.1244)	48	3.48 (0.1370)
	86	2.86 (0.1126)	18	3.18 (0.1252)	–	
	88	2.88 (0.1134)	20	3.20 (0.1260)	–	
	Drive pinion bearing adjusting washer thickness mm (in.)					
	87	1.87 (0.0736)	01	2.01 (0.0791)	15	2.15 (0.0846)
	88	1.88 (0.0740)	02	2.02 (0.0795)	16	2.16 (0.0850)
	89	1.89 (0.0744)	03	2.03 (0.0799)	17	2.17 (0.0854)
	90	1.90 (0.0748)	04	2.04 (0.0803)	18	2.18 (0.0858)
	91	1.91 (0.0752)	05	2.05 (0.0807)	19	2.19 (0.0862)
	92	1.92 (0.0756)	06	2.06 (0.0811)	20	2.20 (0.0866)
	93	1.93 (0.0760)	07	2.07 (0.0815)	21	2.21 (0.0870)
	94	1.94 (0.0764)	08	2.08 (0.0819)	22	2.22 (0.0874)
	95	1.95 (0.0768)	09	2.09 (0.0823)	23	2.23 (0.0878)
	96	1.96 (0.0772)	10	2.10 (0.0827)	24	2.24 (0.0882)
	97	1.97 (0.0776)	11	2.11 (0.0831)	25	2.25 (0.0886)
	98	1.98 (0.0780)	12	2.12 (0.0835)	26	2.26 (0.0890)
	99	1.99 (0.0783)	13	2.13 (0.0839)	27	2.27 (0.0894)
	00	2.00 (0.0787)	14	2.14 (0.0843)	28	2.28 (0.0898)

V06567

SA0KY-06

TORQUE SPECIFICATION

FRONT (2WD):

Part tightened	N·m	kgf·cm	ft·lbf
Hub nut	110	1,150	83
Rack end lock nut	54	550	40
Steering knuckle x Upper ball joint	110	1,100	80
Steering knuckle x Lower ball joint	160	1,600	116
Tie rod end x Lower ball joint	72	730	53
Steering knuckle x Brake caliper	108	1,100	80
Steering knuckle x Knuckle arm	183	1,870	135
Upper suspension arm x Upper ball joint	39	400	29
Lower suspension arm x Spring bumper	43	440	32
Lower suspension arm x Lower suspension arm No. 3	150	1,530	111
Shock absorber x Frame	39	400	29
Lower suspension arm x Shock absorber	25	250	18
Lower suspension arm x Stabilizer bar link	39	400	29
Lower suspension arm x Frame	200	2,050	148
Upper suspension arm shaft x Frame	130	1,300	94
Upper suspension arm shaft x Upper suspension arm	126	1,280	93
Lower suspension arm x Strut bar	150	1,530	111
Strut bar x Frame	300	3,050	221
Stabilizer bar bracket x Frame	29	300	22
ABS speed sensor x Steering knuckle	8	82	71 in.·lbf
ABS speed sensor wire clamp x Steering knuckle	8	82	71 in.·lbf
ABS speed sensor wire clamp x Upper suspension arm	8	82	71 in.·lbf

SA

FRONT (4WD):

Part tightened	N·m	kgf·cm	ft·lbf
Hub nut	110	1,150	83
Rack end lock nut	55	560	41
Steering knuckle x Lower ball joint	80	820	59
Tie rod end x Lower ball joint	90	930	67
Steering knuckle x Brake caliper	123	1,250	90
Drive shaft x Free wheeling hub inner hub (w/ Free wheeling hub)	18	185	13
Drive shaft x Axle hub (w/o Free wheeling hub)	235	2,400	174
Axle hub bearing lock nut (w/ Free wheeling hub)	274	2,800	203
Free wheeling hub cover x Free wheeling hub body	10	100	7
Free wheeling hub body x Axle hub	31	315	23
Upper suspension arm x Upper ball joint	105	1,100	80
Lower suspension arm x Frame	130	1,325	96
Upper suspension arm x Frame	115	1,200	87
Lower suspension arm x Lower ball joint	152	1,550	112
Lower suspension arm x No. 1, No. 2 spring bumper	See page SA-83		
Upper suspension arm x Frame	115	1,200	87
Frame x Suspension support	64	650	47
Lower suspension arm x Shock absorber	135	1,400	101
Lower suspension arm x Stabilizer bar link	69	700	51
Stabilizer bar x Stabilizer bar link	29	300	22

Stabilizer bar bracket x Frame	25	260	19
ABS speed sensor x Steering knuckle	8	82	71 in.·lbf
ABS speed sensor wire clamp x Steering knuckle	8	82	71 in.·lbf
ABS speed sensor wire clamp x Upper suspension arm	8	82	71 in.·lbf
Differential			
Differential front mounting cushion x Frame	137	1,400	101
Differential rear mounting cushion x Frame	87	890	64
Differential front mounting cushion x Differential	157	1,600	116
Differential rear mounting cushion x Differential	108	1,100	80
Ring gear x Differential case	97	985	71
Differential carrier x Differential tube	78	800	58
Differential carrier x Side bearing retainer	69	700	51
A.D.D. clutch case x Differential	78	800	58
A.D.D. clutch case x Differential tube	78	800	58
A.D.D. actuator x A.D.D. clutch case	21	210	15
Screw plug x clutch case cover	20	200	14
Screw plug x A.D.D. actustor	13	130	9
A.D.D. switch x clutch case cover	40	410	30
Oil TEMP. sensor x Differential (w/2–4 selector)	29	300	22
Drain plug	65	660	48
Filler plug	39	400	29

REAR:

Part tightened		N·m	kgf·cm	ft·lbf
Hub nut		110	1,150	83
Axle housing x Backing plate		68	700	50
Shock absorber x Spring seat	2WD	26	260	19
	4WD	71	730	53
Shock absorber x Frame	2WD	26	260	19
	4WD	71	730	53
U–bolt x Spring seat		120	1,250	90
Leaf spring hanger pin bolt x Frame		155	1,600	115
Shackle pin x Leaf spring		91	930	67
Shackle pin x Frame		91	930	67
Leaf spring center bolt		44	450	33
Spring bumper x Frame	2WD only	29	300	22
ABS speed sensor x Axle housing		8	82	71 in.·lbf
Differential (2RZ–FE)				
Differential carrier x Axle housing		25	250	18
Differential carrier x Bearing cap		85	870	63
Differential case x Ring gear		97	985	71
Adjusting nut lock x Bearing cap		13	130	9
Drain plug, Filler plug		49	500	36

SA

Differential (3RZ–FE, 5VZ–FE w/Diff. lock)			
Differential carrier x Axle housing	25	250	18
Differential carrier x Bearing cap	78	800	58
Differential case x Ring gear	97	985	71
Adjusting nut lock x Bearing cap	13	130	9
Differential RH case x Differential LH case	47	480	35
Differential carrier x Diff. lock indicator swith	40	410	31
Differential carrier x Shaft retainer	24	240	17
Differential carrier x Screw plug	22	220	16
Differential carrier x Acutuator	26	270	20
Drain plug, Filler plug	49	500	36
Differential (3RZ–FE, 5VZ–FE w/o Diff. lock)			
Differential carrier x Axle housing	73	740	54
Differential carrier x Bearing cap	113	1,150	83
Differential case x Ring gear	125	1,270	92
Drain plug, Filler plug	49	500	36

SA

BRAKE SYSTEM

GENERAL DESCRIPTION ..... BR– 2
PREPARATION ..... BR– 2
TROUBLESHOOTING ..... BR– 3
CHECK AND ADJUSTMENT ..... BR– 4
MASTER CYLINDER ..... BR– 7
FRONT BRAKE
(2WD) ..... BR– 13
(4WD) ..... BR– 17
REAR BRAKE
(2WD) ..... BR– 21
(4WD) ..... BR– 25
LOAD SENSING PROPORTIONING AND BY–PASS VALVE (LSP & BV) ..... BR– 29
ANTI–LOCK BRAKE SYSTEM (ABS)
ABS ACTUATOR ..... BR– 35
FRONT SPEED SENSOR ..... BR– 40
REAR SPEED SENSOR ..... BR– 41
TROUBLESHOOTING ..... BR– 43
SERVICE SPECIFICATIONS ..... BR– 82

GENERAL DESCRIPTION

BR012–00

1. Care must be taken to replace each part properly as it could affect the performance of the brake system and result in a driving hazard. Replace the parts with parts of the same part number or equivalent.
2. It is very important to keep parts and the area clean when repairing the brake system.
3. If the vehicle is equipped with a mobile communication system, refer to the precaution in the IN section.

PREPARATION

BR016–0W

SST (SPECIAL SERVICE TOOLS)

	09023–00100	Union Nut Wrench 10 mm	
	09703–30010	Brake Shoe Return Spring Tool	
	09709–29017	LSPV Gauge Set	
	09718–00010	Shoe Hold Down Spring Driver	
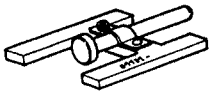	09737–00010	Brake Booster Push Rod Gauge	
	09843–18020	Diagnosis Check Wire	
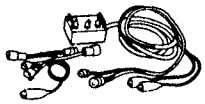	09990–00150	ABS Actuator Checker and Sub–harness	
	09990–00200	ABS Actuator Checker Sub–harness "C"	
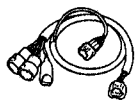	09990–00210	ABS Actuator Checker Sub–harness "E"	
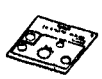	09990–00370	ABS Actuator Checker Sheet "L"	

BR

RECOMMENDED TOOLS

BR06J-0A

	09082-00050 TOYOTA Electrical Tester Set.	
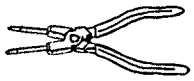	09905-00013 Snap Ring Pliers .	

EQUIPMENT

BR017-10

Torque wrench	
Micrometer	Brake disc
Dial indicator	Brake disc
Vernier calipers	Brake drum

LUBRICANT

BR018-0E

Item	Capacity	Classification
Brake fluid	—	SAE J1703 or FMVSS No.116 DOT 3

TROUBLESHOOTING

Use the table below to help you find the cause of the problem. The numbers indicate the priority of the likely cause of the problem. Check each part in order. If necessary, replace these parts.

BR019-0S

See page	–	–	BR-13,17, 21,25	BR-13,17	BR-4	BR-8	BR-21,25	BR-7	–	BR-12	BR-21,25	BR-13,17, 21,25	BR-13,17	BR-13,17, 21,25	BR-13,17	BR-5	BR-13	BR-13,17	BR-13	BR-13,17	BR-13,17, 21,25	BR-13,17, 21,25	BR-13,17	BR-21,25
Part Name / Trouble	Brake system (Fluid leaks)	Brake system (Air in)	Brake pad or lining (Worn)	Piston seal (Worn or damaged)	Brake pedal (Freeplay minimal)	Master cylinder (Faulty)	Rear brake (Shoe clearance out of adjustment)	Parking brake (Lever travel out of adjustment)	Parking brake wire (Sticking)	Booster push rod (Out of adjustment)	Anchor or return spring (Faulty)	Pad or lining (Cracked or distorted)	Piston (Stuck)	Pad or lining (Oily)	Piston (Frozen)	Booster system (Vacuum leaks)	Pad support plate (Loose)	Installation bolt (Loose)	Sliding pin (Worn)	Disc (Scored)	Pad or lining (Dirty)	Pad or lining (Glazed)	Anti-squeal shim (Damaged)	Hold-down spring (Damaged)
Low pedal or spongy pedal	1	2		3		5	4			6														
Brake drag					1	11	4	2	3	9	8	5	6		7	10								
Brake pull												5	1	2	3					4				
Hard pedal but brake inefficient	1	2	3				5			9		4		6		10				8		7		
Noise from brakes											8	1					4	2	5	3	6	7	9	10

V05570

BR

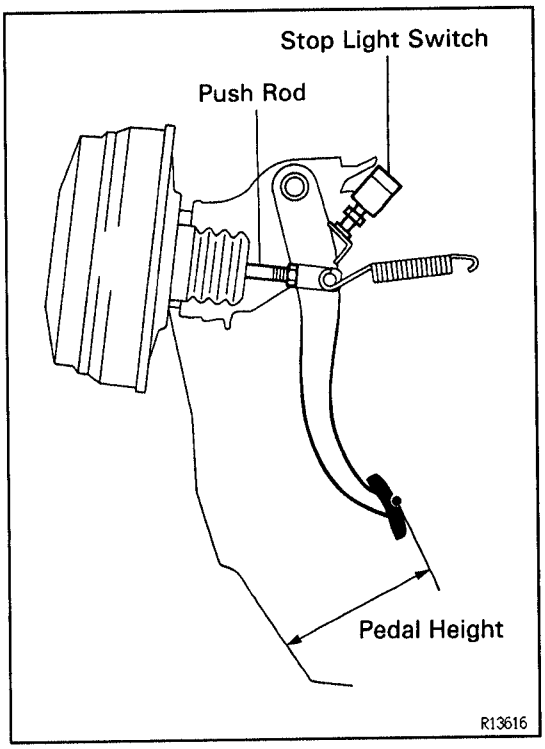

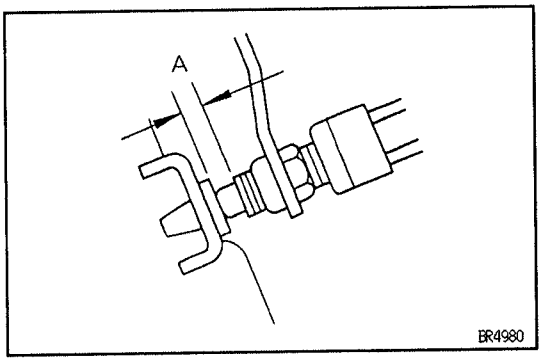

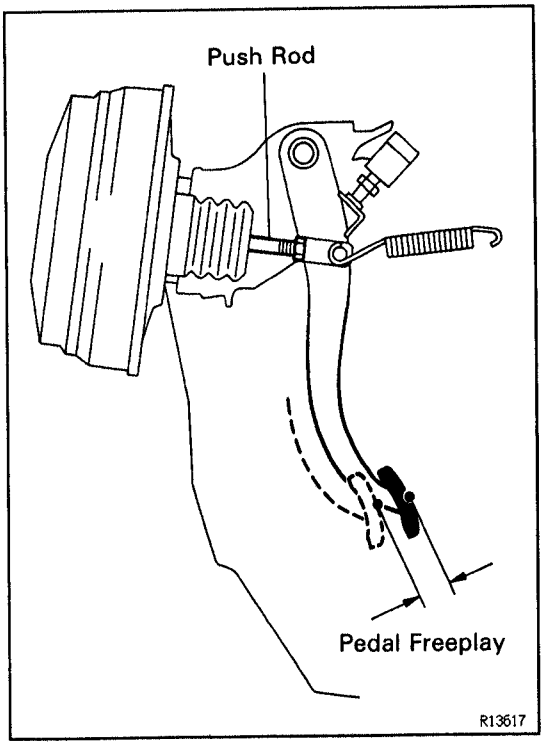

CHECK AND ADJUSTMENT

BRAKE PEDAL CHECK AND ADJUSTMENT

BR0A6-02

1. CHECK PEDAL HEIGHT

Pedal height from asphalt sheet:

159.1 – 169.1 mm (6.264 – 6.657 in.)

2. IF NECESSARY, ADJUST PEDAL HEIGHT

(a) Disconnect the connector from the stop light switch.

(b) Loosen the stop light switch lock nut and remove the stop light switch.

(c) Loosen the push rod lock nut.

(d) Adjust the pedal height by turning the pedal push rod.

(e) Tighten the push rod lock nut.

Torque: 25 N·m (260 kgf·cm, 19 ft·lbf)

(f) Install the stop light switch and turn it until it lightly contacts the pedal stopper.

(g) Turn the stop light switch back one turn.

(h) Check the clearance (A) between stop light switch and pedal.

Clearance:

0.5–2.4 mm (0.020–0.094 in.)

(i) Tighten the stop light switch lock nut.

(j) Check the stop lights come on when the brake pedal is depressed, and go off when the brake pedal is released.

(k) After adjusting the pedal height, check the pedal freeplay.

HINT: If clearance (A) between the stop light switch and the brake pedal stopper had been adjusted correctly, the pedal freeplay will meet the specifications.

3. CHECK PEDAL FREEPLAY

(a) Stop the engine and depress the brake pedal several times until there is no more vacuum left in the booster.

(b) Push in the pedal by hand until the beginning of the second resistance is felt. Measure the distance.

Pedal freeplay:

3–6 mm (0.12–0.24 in.)

HINT: The freeplay to the 1st resistance is due to the play between the clevis and pin. This is magnified up to 1–3 mm (0.04– 0.12 in.) at the pedal.

If incorrect, check the stop light switch clearance.

If the clearance is OK, then troubleshoot the brake system.

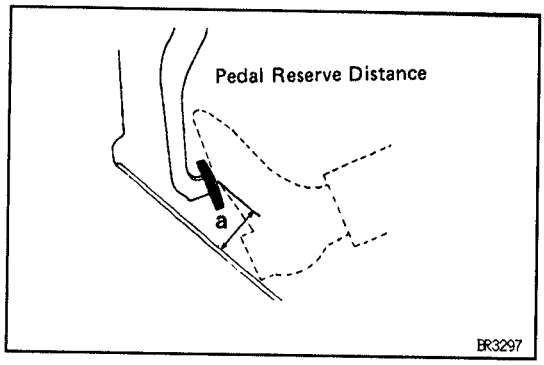

4. CHECK PEDAL RESERVE DISTANCE

Release the parking brake.

With the engine running, depress the pedal and measure the pedal reserve distance, as shown.

Pedal reserve distance, 'a', at 490 N (50 kgf, 110.2 lbf):
More than 72 mm (2.83 in.)

If incorrect, troubleshoot the brake system.

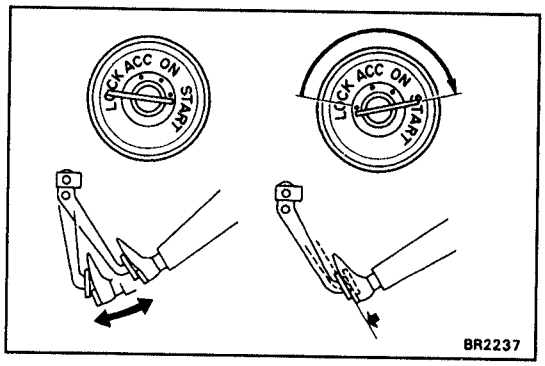

BRAKE BOOSTER OPERATIONAL TEST BR0A7-08

1. OPERATING CHECK

(a) Depress the brake pedal several times with the engine off and check that there is no change in the pedal reserve distance.

(b) Depress the brake pedal and start the engine. If the pedal goes down slightly, operation is normal.

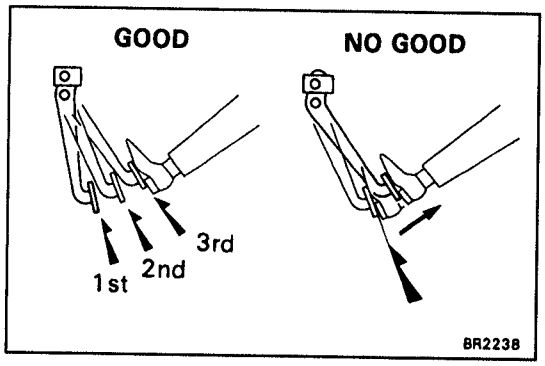

2. AIR TIGHTNESS CHECK

(a) Start the engine and stop it after 1 or 2 minutes. Depress the brake pedal several times slowly.
If the pedal goes down farthest the 1st time, but gradually rises after the 2nd or 3rd time, the booster is air tight.

(b) Depress the brake pedal while the engine is running, and stop the engine with the pedal depressed. If there is no change in the pedal reserve travel after holding the pedal for 30 seconds, the booster is air tight.

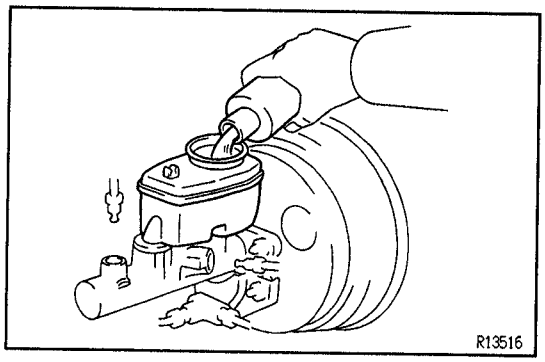

BRAKE SYSTEM BLEEDING BR0A8-08

HINT: If any work is done on the brake system or if air is suspected in the brake lines, bleed the system of air.
NOTICE: Do not let brake fluid remain on a painted surface. Wash it off immediately.

1. FILL BRAKE RESERVOIR WITH BRAKE FLUID

Check the fluid level in the reservoir after bleeding each wheel. Add fluid, if necessary.
Fluid: SAEJ1703 or FMVSS No.116 DOT 3

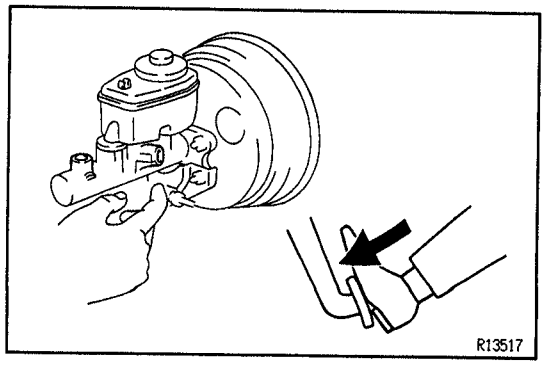

2. BLEED MASTER CYLINDER

HINT: If the master cylinder has been disassembled or if the reservoir becomes empty, bleed the air from the master cylinder.

(a) Disconnect the brake lines from the master cylinder.

(b) Slowly depress the brake pedal and hold it.

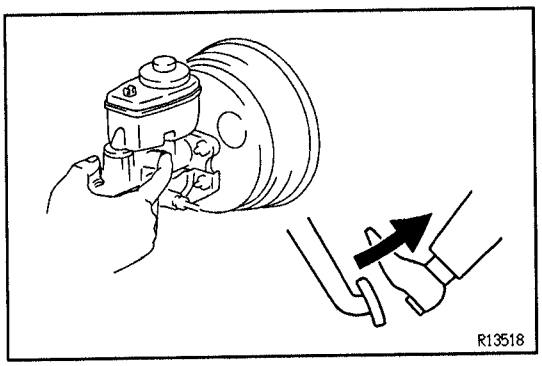

(c) Block off the outlet plug with your finger, and release the brake pedal.
(d) Repeat (b) and (c) 3 or 4 times.

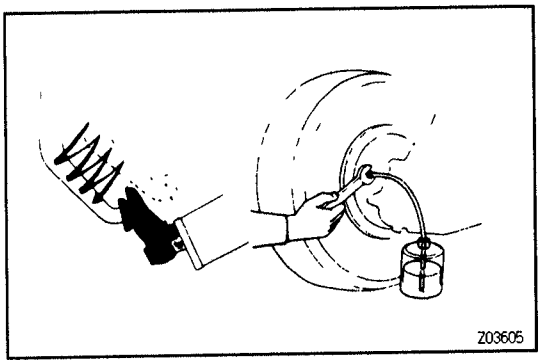

3. CONNECT VINYL TUBE TO BRAKE CALIPER OR WHEEL CYLINDER BLEEDER PLUG

Insert other end of the tube in a half—full container of brake fluid.

HINT: Begin air bleeding from the wheel cylinder with the longest hydraulic line.

4. BLEED BRAKE LINE

(a) Slowly depress the brake pedal several times.
(b) While an assistant depresses the pedal, loosen the bleeder plug until fluid starts to run out. Then tighten the bleeder plug.
(c) Repeat this procedure until there are no more air bubbles in the fluid.

Bleeder plug tightening torque:
11 N·m (110 kgf·cm, 8 ft·lbf)

5. REPEAT PROCEDURE FOR EACH WHEEL

6. BLEED LSP & BV

BR

BR0A9-0A

PARKING BRAKE CHECK AND ADJUSTMENT

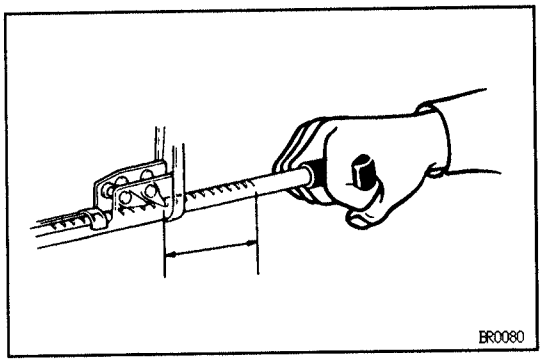

1. CHECK PARKING BRAKE LEVER TRAVEL

Pull the parking brake level all the way up, and count the number of clicks.

Parking brake lever travel at 196 N (20 kgf, 44.1 lbf):
12 – 18 clicks

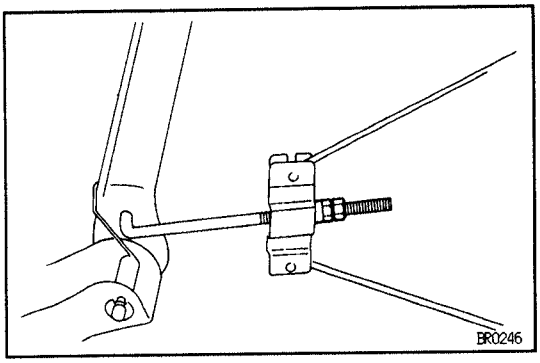

2. IF NECESSARY, ADJUST PARKING BRAKE

HINT: Before adjusting the parking brake, make sure that the rear brake shoe clearance has been adjusted.

2WD:

(a) Tighten the adjusting nut until the travel is correct. Then tighten the lock nut.
(b) After adjusting the parking brake, confirm that the rear brakes are not dragging.

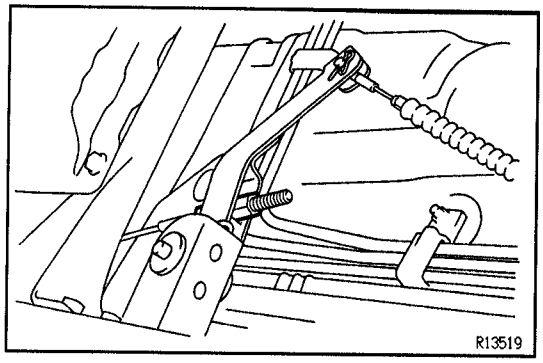

4WD:

(a) Tighten one of the adjusting nuts of the intermediate lever while loosening the other one until the travel is correct. Tighten the 2 adjusting nuts.

(b) After adjusting the parking brake, confirm that the bellcrank stopper screw comes into contact with the backing plate.

MASTER CYLINDER

MASTER CYLINDER REMOVAL

BR0A3–08

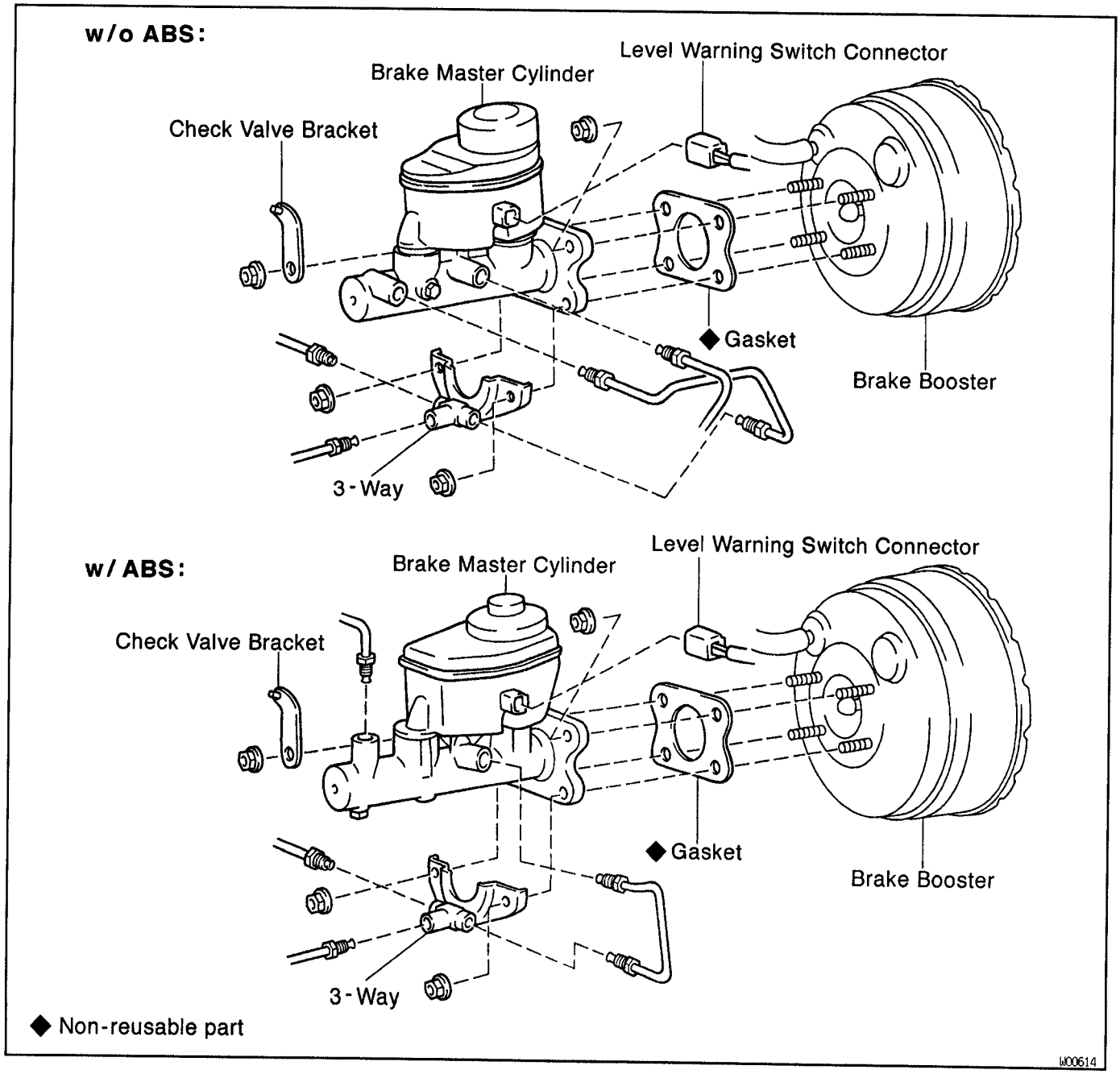

BR

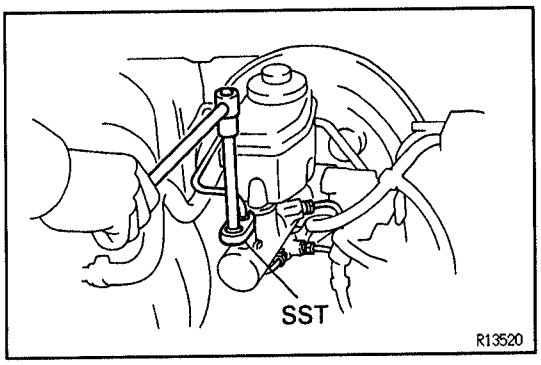

1. **DISCONNECT LEVEL WARNING SWITCH CONNECTOR**
2. **TAKE OUT FLUID WITH SYRINGE**
   NOTICE: Do not let brake fluid remain on a painted surface. Wash it off immediately.
3. **DISCONNECT BRAKE LINES**
   Using SST, disconnect the 5 brake lines.
   SST 09023–00100
   Torque: 15 N·m (155 kgf·cm, 11 ft·lbf)

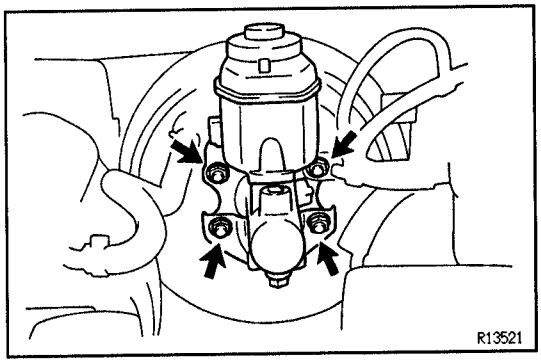

4. **REMOVE MASTER CYLINDER**
   (a) Remove the 4 nuts, 3–way and check valve bracket.
   Torque: 13 N·m (130 kgf·cm, 9 ft·lbf)
   (b) Pull out the master cylinder and gasket.

COMPONENTS

BR0AA–0A

w/o ABS:

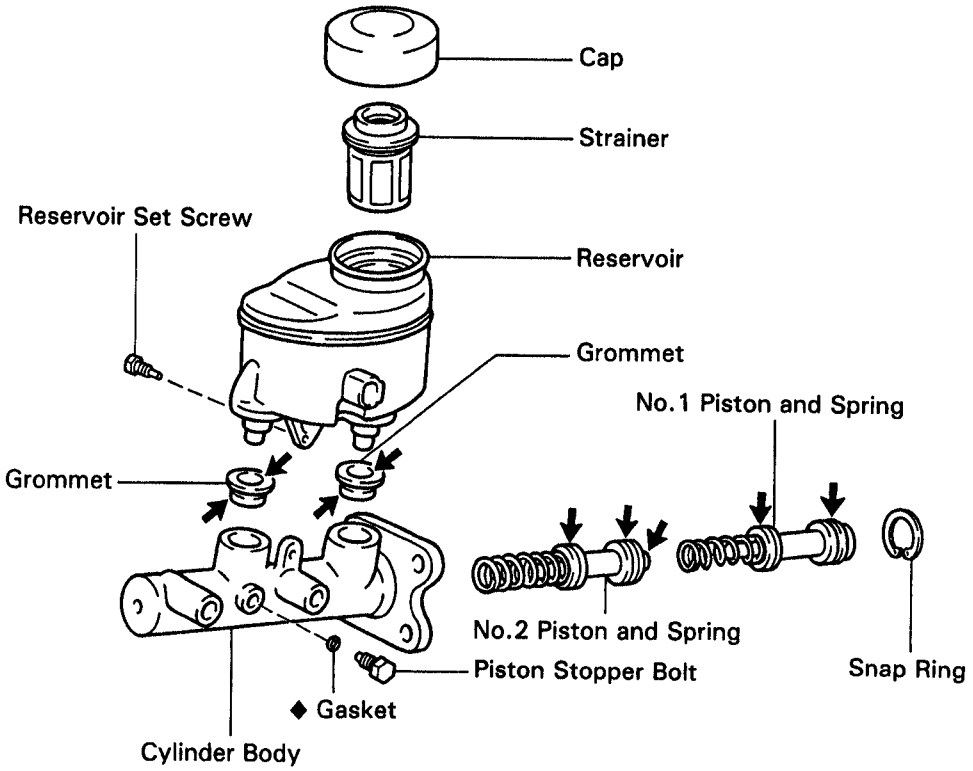

w/ ABS:

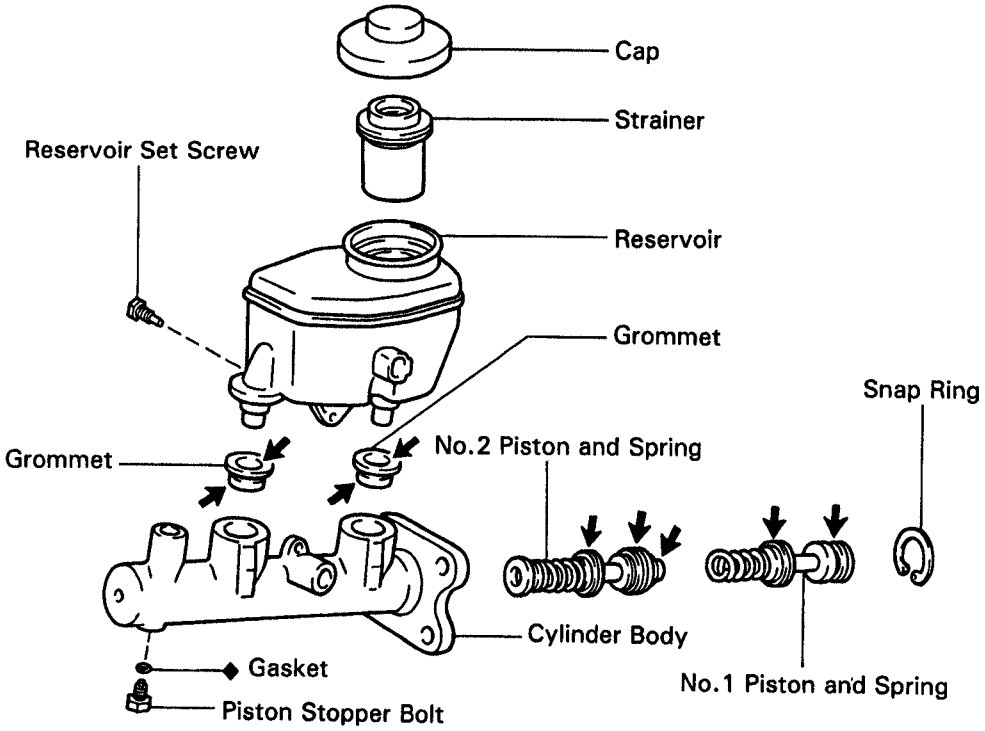

◆ Non-reusable part

➡ Lithium Soap Base Glycol Grease

R13635

BR

BR1AL–01

MASTER CYLINDER DISASSEMBLY

1. REMOVE RESERVOIR

(a) Remove the set screw and pull out the reservoir.
Torque:
w/o ABS 1.5 N·m (15 kgf·cm, 13 in.·lbf)
w/ ABS 1.7 N·m (18 kgf·cm, 16 in.·lbf)

(b) Remove the cap and strainer from the reservoir.

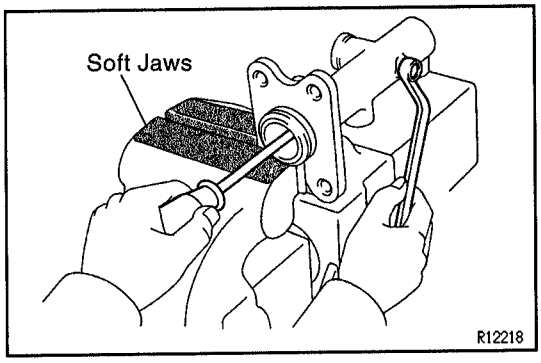

2. REMOVE 2 GROMMETS

3. PLACE CYLINDER IN VISE

4. REMOVE PISTON STOPPER BOLT

Using a screwdriver, push the pistons in all the way and remove the piston stopper bolt and gasket.
HINT: Tape the screwdriver tip before use.
Torque:
w/o ABS 8 N·m (80 kgf·cm, 69 in.·lbf)
w/ ABS 10 N·m (100 kgf·cm, 7 ft·lbf)

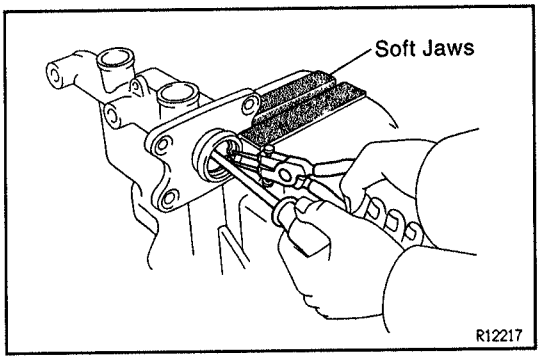

5. REMOVE 2 PISTONS AND SPRINGS

(a) Push in the piston with a screwdriver and remove the snap ring with snap ring pliers.
HINT: Tape the screwdriver tip before use.

(b) Remove the No.1 piston and spring by hand, pulling straight out, not at an angle.
NOTICE: If pulled out and installed at an angle, there is a possibly that the cylinder bore could be damaged.
ASSEMBLY NOTICE: Be careful not to damage the rubber lips on the pistons.

(c) Place a rag and 2 wooden blocks on the work table, and lightly tap the cylinder flange against the block edges until the No.2 piston drops out of the cylinder.
DISASSEMBLY HINT: Make sure the distance (A) from the rag to the top of the blocks is at least 100 mm (3.94 in.).

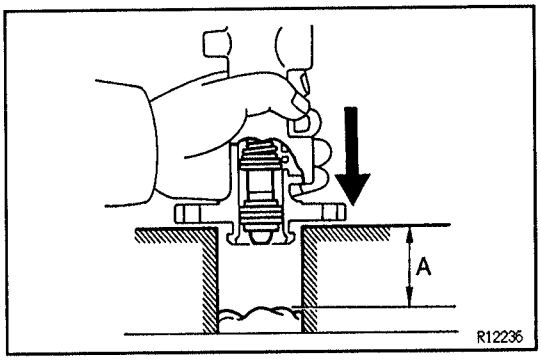

BR

BR1AM–01

MASTER CYLINDER ASSEMBLY

Assembly is in the reverse order of disassembly.
ASSEMBLY NOTICE: Apply lithium soap base glycol grease to the rubber parts indicated by the arrows (See page BR–9).

MASTER CYLINDER COMPONENTS INSPECTION

BR0AC–08

HINT: Clean the disassembled parts with compressed air.

1. **INSPECT CYLINDER BORE FOR RUST OR SCORING**
2. **INSPECT CYLINDER FOR WEAR OR DAMAGE**
   If necessary, clean or replace the cylinder.

MASTER CYLINDER INSTALLATION

BR1AN–01

Installation is in the reverse order of removal. BEFORE INSTALLATION, ADJUST LENGTH OF BRAKE BOOSTER PUSH ROD (See page BR–12) AFTER INSTALLATION, FILL BRAKE RESERVOIR WITH BRAKE FLUID, BLEED BRAKE SYSTEM (See page BR–5), CHECK FOR LEAKS, CHECK AND ADJUSTMENT BRAKE PEDAL (See page BR–4)

BRAKE BOOSTER

BRAKE BOOSTER REMOVAL

BR126–02

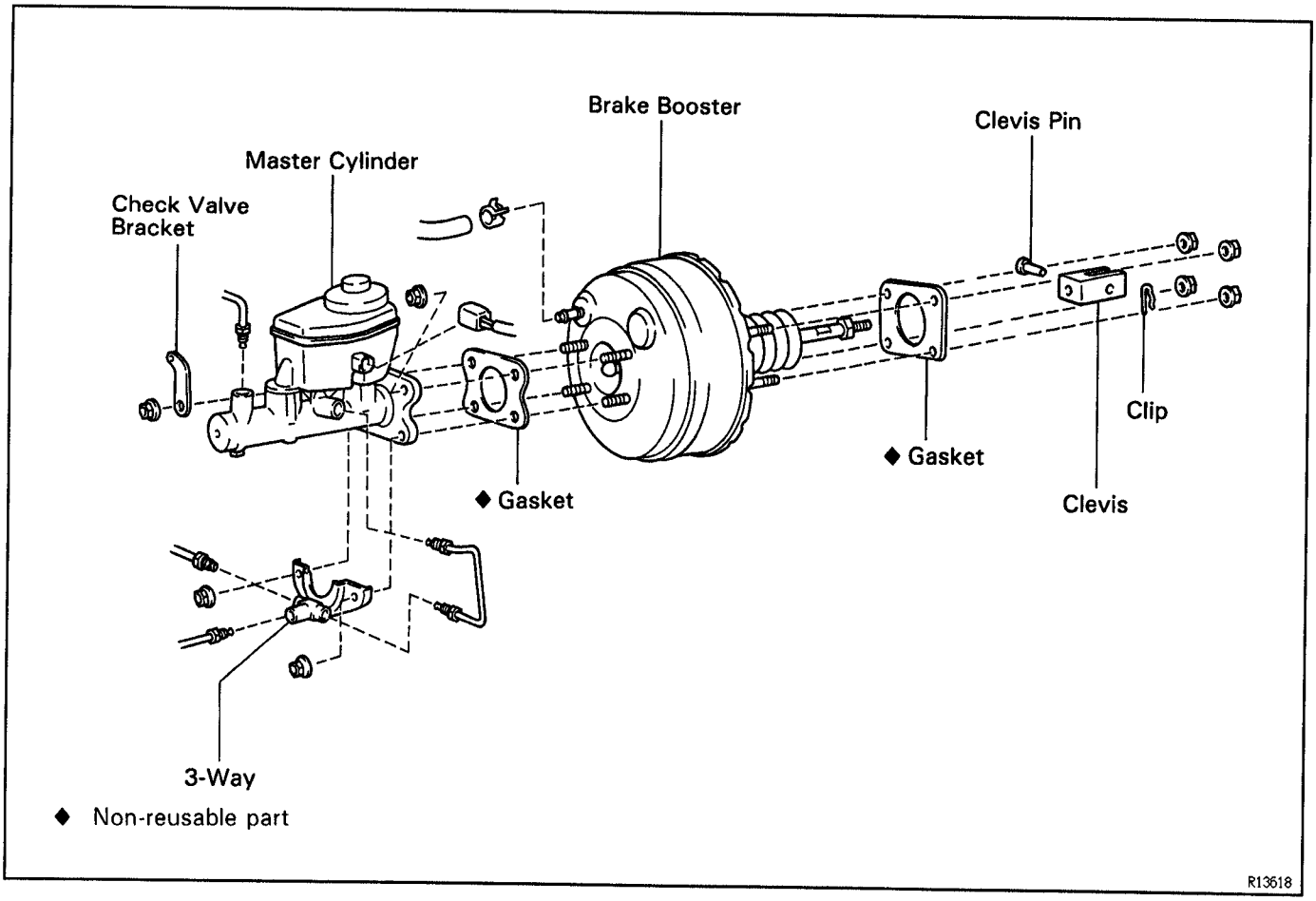

BR

1. **REMOVE MASTER CYLINDER**
(See page BR–7)
2. **REMOVE THESE PARTS:**
   - Return spring
   - Clip and clevis pin
   - Clevis
   - Vacuum hose

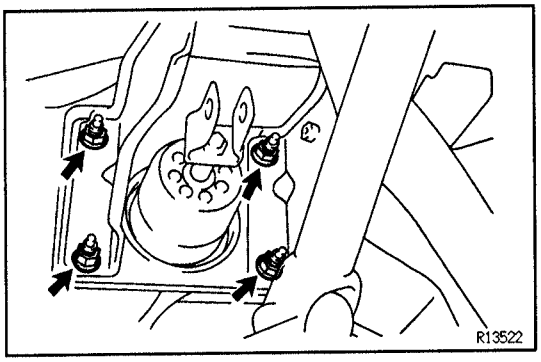

3. **REMOVE BRAKE BOOSTER**

(a) Remove the 4 booster installation nuts.

(b) Remove the booster and gasket.

BR0AG–0A

BRAKE BOOSTER INSTALLATION

1. **INSTALL BRAKE BOOSTER**

(a) Install the booster and a new gasket.

(b) Install the clevis to the operating rod.

(c) Install and torque the booster installation nuts.
Torque: 13 N·m (130 kgf·cm, 9 ft·lbf)

(d) Install the clevis, and torque the lock nut.
Torque: 25 N·m (250 kgf·cm, 19 ft·lbf)

(e) Install the clevis pin into the clevis and brake pedal, and install the clip to the clevis pin.

(f) Install the pedal return spring.

2. **ADJUST LENGTH OF BOOSTER PUSH ROD**

(a) Install a new gasket on the master cylinder.

(b) Set the SST on the gasket, and lower the pin until its tip slightly touches the piston.
SST 09737–00010

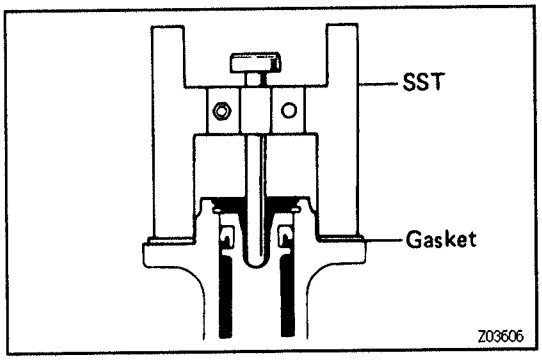

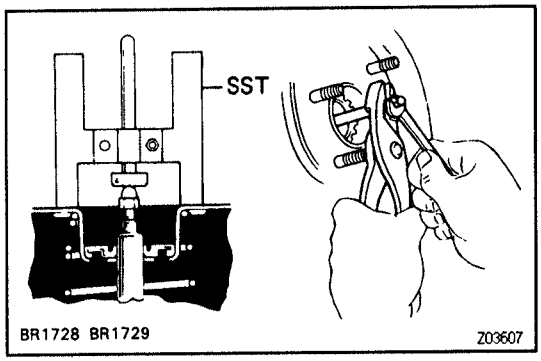

(c) Turn the SST upside down, and set it on the booster.
SST 09737–00010

(d) Measure the clearance between the booster push rod and pin head (SST).
Clearance:
0 mm (0 in.)

(e) Adjust the booster push rod length until the push rod lightly touches the pin head.

3. **INSTALL MASTER CYLINDER (See page BR–7)**
4. **CONNECT VACUUM HOSE TO BRAKE BOOSTER**
5. **FILL BRAKE RESERVOIR WITH BRAKE FLUID AND BLEED BRAKE SYSTEM (See page BR–5)**
6. **CHECK FOR FLUID LEAKAGE**
7. **CHECK AND ADJUST BRAKE PEDAL (See page BR–4)**
8. **DO OPERATIONAL CHECK (See page BR–5)**

FRONT BRAKE (2WD)

COMPONENTS

BR0AH–06

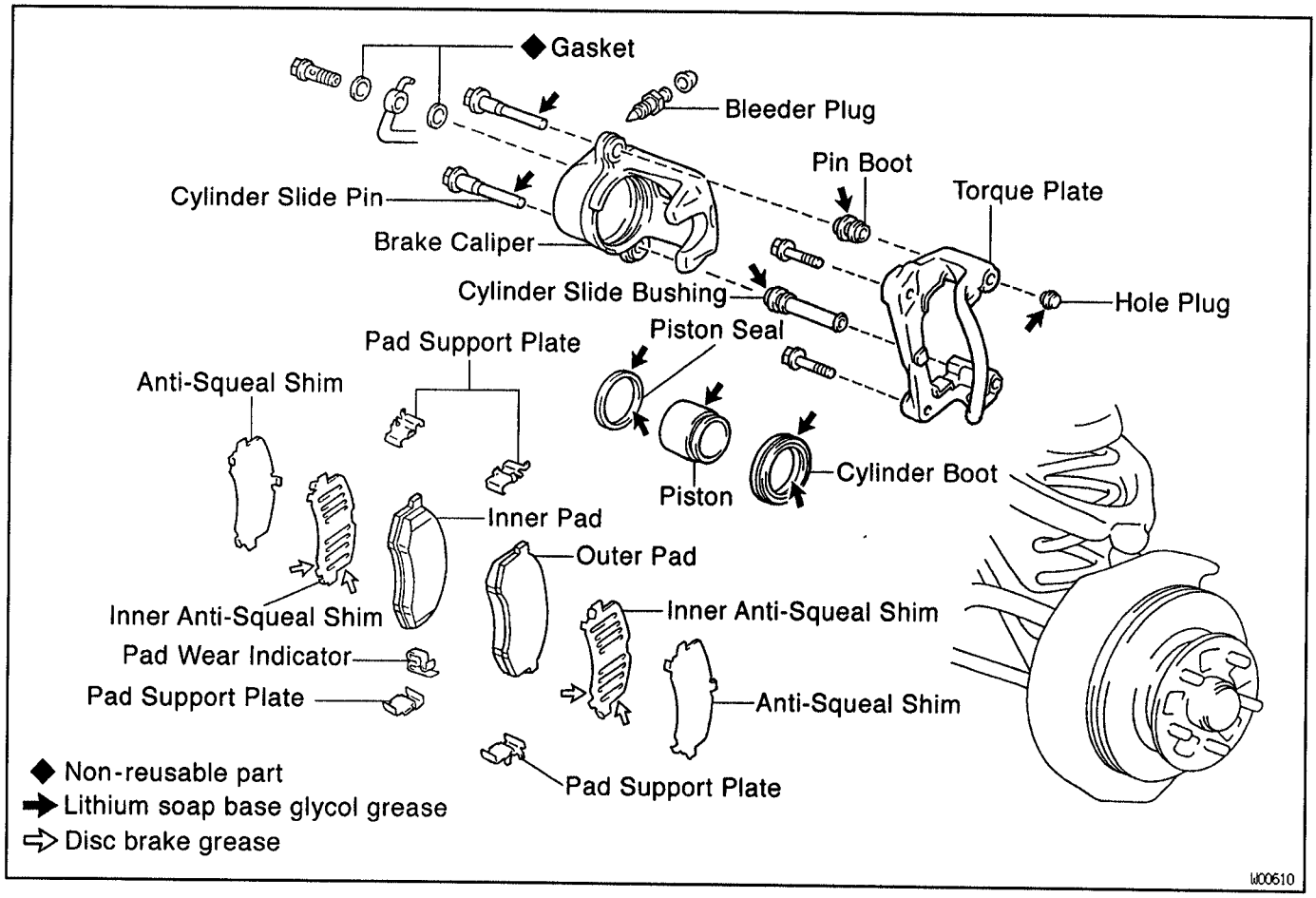

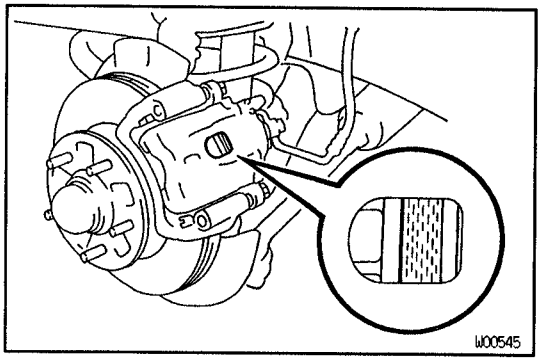

BRAKE PADS REPLACEMENT

BR1AP–01

1. **REMOVE FRONT WHEEL**
2. **INSPECT PAD LINING THICKNESS**
   Check the pad thickness through the caliper inspection hole and replace pads if not within specification.
   Minimum thickness:
   1.0 mm (0.039 in.)

BR

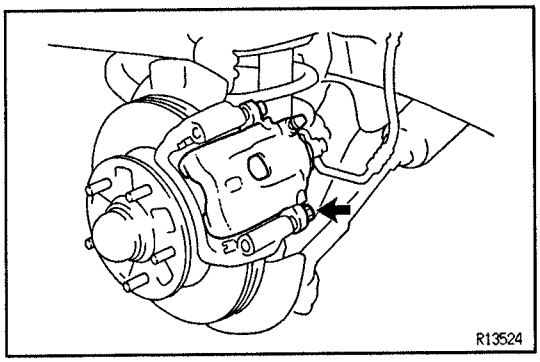

3. LIFT UP CALIPER

(a) Remove the sliding pin.

(b) Lift up the caliper and suspend it securely.
HINT: Do not disconnect the flexible hose from the caliper.

4. REMOVE THESE PARTS:

- 2 brake pads
- 4 anti–squeal shims
- Pad wear indicator plate
- 4 pad support plates

NOTICE: The pad support plates can be used again provided that they have sufficient rebound, no deformation, cracks or wear, and have had all rust, dirt and foreign particles cleaned off.

5. CHECK DISC THICKNESS AND RUNOUT
(See page BR–16)

6. INSTALL 4 PAD SUPPORT PLATES

7. INSTALL NEW PADS

NOTICE: When replacing worn pads, the anti–squeal shims and wear indicator plates must be replaced together with the pads.

BR

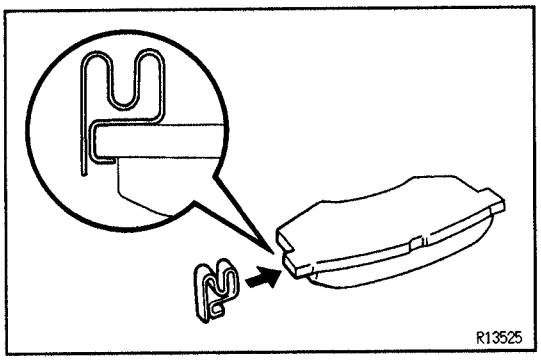

(a) Install a pad wear indicator plate to the inner pad.

(b) Install the 2 anti–squeal shims to each pad.
HINT: Apply disc brake grease to both sides of inner anti–squeal shims (See page BR–13).

(c) Install the inner pad so that the wear indicator plate is facing downward, then install the outer pad.
NOTICE: Do not allow oil or grease to get on the rubbing face.

8. INSTALL CALIPER

(a) Draw out a small amount of brake fluid from the reservoir.

(b) Press in piston with a hammer handle or equivalent.
HINT: If the piston is difficult to push in, loosen the bleeder plug and push in the piston while letting some brake fluid escape.

(c) Insert the brake caliper carefully so the boot is not wedged.

(d) Install and torque the sliding pin.
Torque: 88 N·m (900 kgf·cm, 65 ft·lbf)

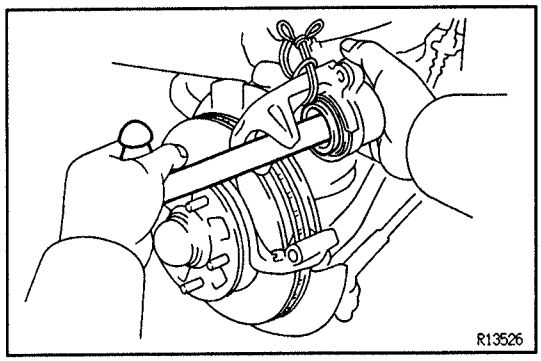

9. INSTALL FRONT WHEEL

10. CHECK THAT FLUID LEVEL IS AT MAX LINE

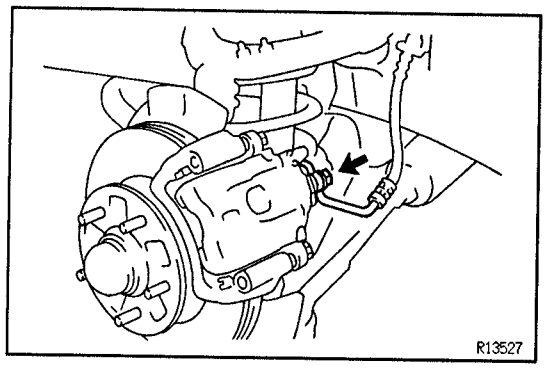

CALIPER REMOVAL

BR0ZJ-04

1. **DISCONNECT FLEXIBLE HOSE**

(a) Remove the union bolt and disconnect the flexible hose.

Torque: 30 N·m (310 kgf·cm, 22 ft·lbf)

INSTALLATION NOTICE: For correct brake hose routing, ensure that the hose hangs down before installing hose to caliper.

(b) Use a container to catch the brake fluid.

2. **REMOVE CALIPER FROM TORQUE PLATE**

Remove the 2 sliding pins and caliper.

Torque: 88 N·m (900 kgf·cm, 65 ft·lbf)

3. **REMOVE THESE PARTS:**

- 2 brake pads with anti–squeal shims and pad wear indicator
- 4 pads support plates

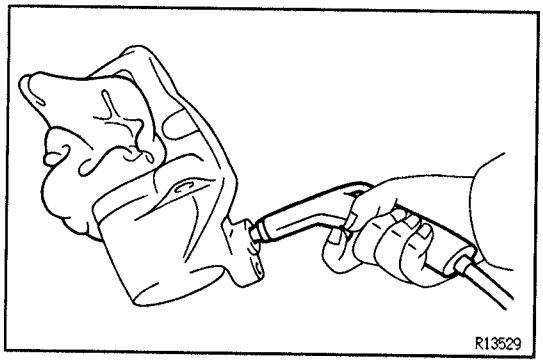

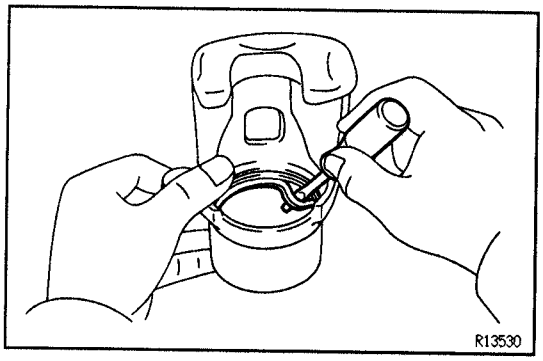

CALIPER DISASSEMBLY

BR12B-02

1. **REMOVE PISTON AND CYLINDER BOOT**

(a) Put a piece of cloth or an equivalent between the piston and caliper.

(b) Use compressed air to remove the piston and cylinder boot from the cylinder.

DISASSEMBLY CAUTION: Do not place your fingers in front of the piston when using compressed air.

2. **REMOVE PISTON SEAL FROM BRAKE CYLINDER**

Using a screwdriver, remove the piston seal.

3. **REMOVE SLIDING BUSHING AND BOOT**

(a) Remove the sliding bushing and boot from the torque plate.

ASSEMBLY HINT: Ensure that the sliding bushing and boot is secured firmly to the caliper grooves.

BR

CALIPER ASSEMBLY

BR1AQ-01

Assembly is in the reverse order of disassembly.

ASSEMBLY NOTICE: Apply lithium soap base glycol grease to the parts indicated by the arrows (See page BR –13).

BR0AM-0A

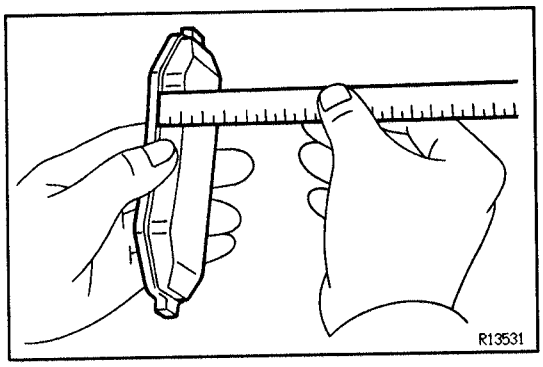

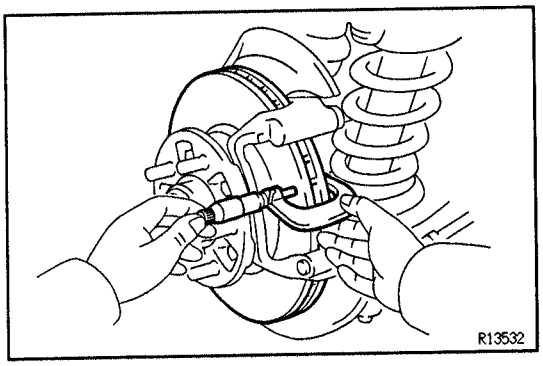

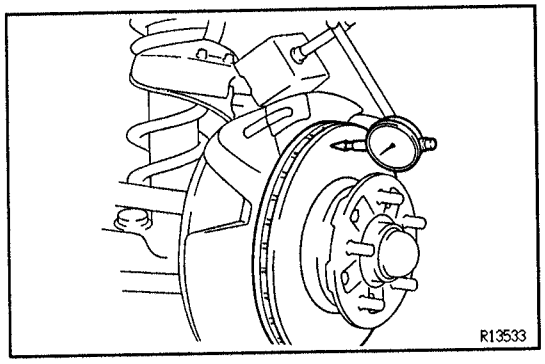

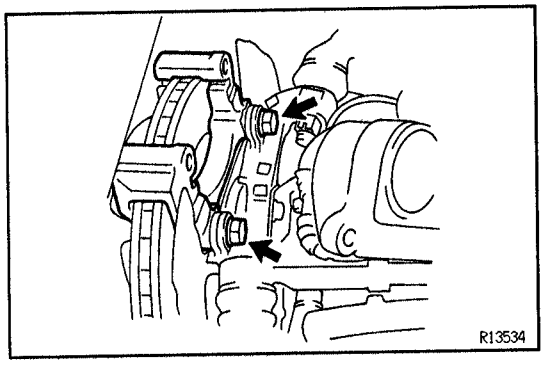

FRONT BRAKE COMPONENTS INSPECTION AND REPAIR

1. MEASURE PAD LINING THICKNESS

Using a ruler, measure the pad lining thickness.

Standard thickness:

12.0 mm (0.472 in.)

Minimum thickness:

1.0 mm (0.039 in.)

Replace the pad if the thickness is less than the minimum (the 1.0 mm slit is no longer visible), or if it shows signs of uneven wear.

2. MEASURE DISC THICKNESS

Using a micrometer, measure the disc thickness.

Standard thickness:

22.0 mm (0.866 in.)

Minimum thickness:

20.0 mm (0.787 in.)

If the disc is scored or worn, or if its thickness is less than minimum, repair or replace the disc.

3. MEASURE DISC RUNOUT

Using a dial indicator, measure the disc runout at a position 10 mm (0.39 in.) from the outside edge.

Maximum disc runout:

0.07 mm (0.0028 in.)

If the runout is greater than the maximum, replace the disc.

HINT: Before measuring the runout, confirm that the front hub bearing play is within specification.

4. IF NECESSARY, REPLACE DISC

(a) Remove the torque plate from the knuckle.

(b) Remove the axle hub. (See page SA–14)

(c) Remove the disc from the axle hub.

(d) Install a new disc. Torque the bolts.
Torque: 64 N·m (650 kgf·cm, 47 ft·lbf)

(e) Install the axle hub and adjust the front bearing preload. (See page SA–16)

(f) Install the torque plate onto the knuckle.
Torque: 108 N·m (1,100 kgf·cm, 80 ft·lbf)

BR1AR-01

CALIPER INSTALLATION

Installation is in the reverse order of removal.
AFTER INSTALLATION, FILL BRAKE RESERVOIR WITH BRAKE FLUID, BLEED BRAKE SYSTEM (See page BR–5) AND CHECK FOR LEAKS

BR

FRONT BRAKE (4WD)

COMPONENTS

BROAX–0F

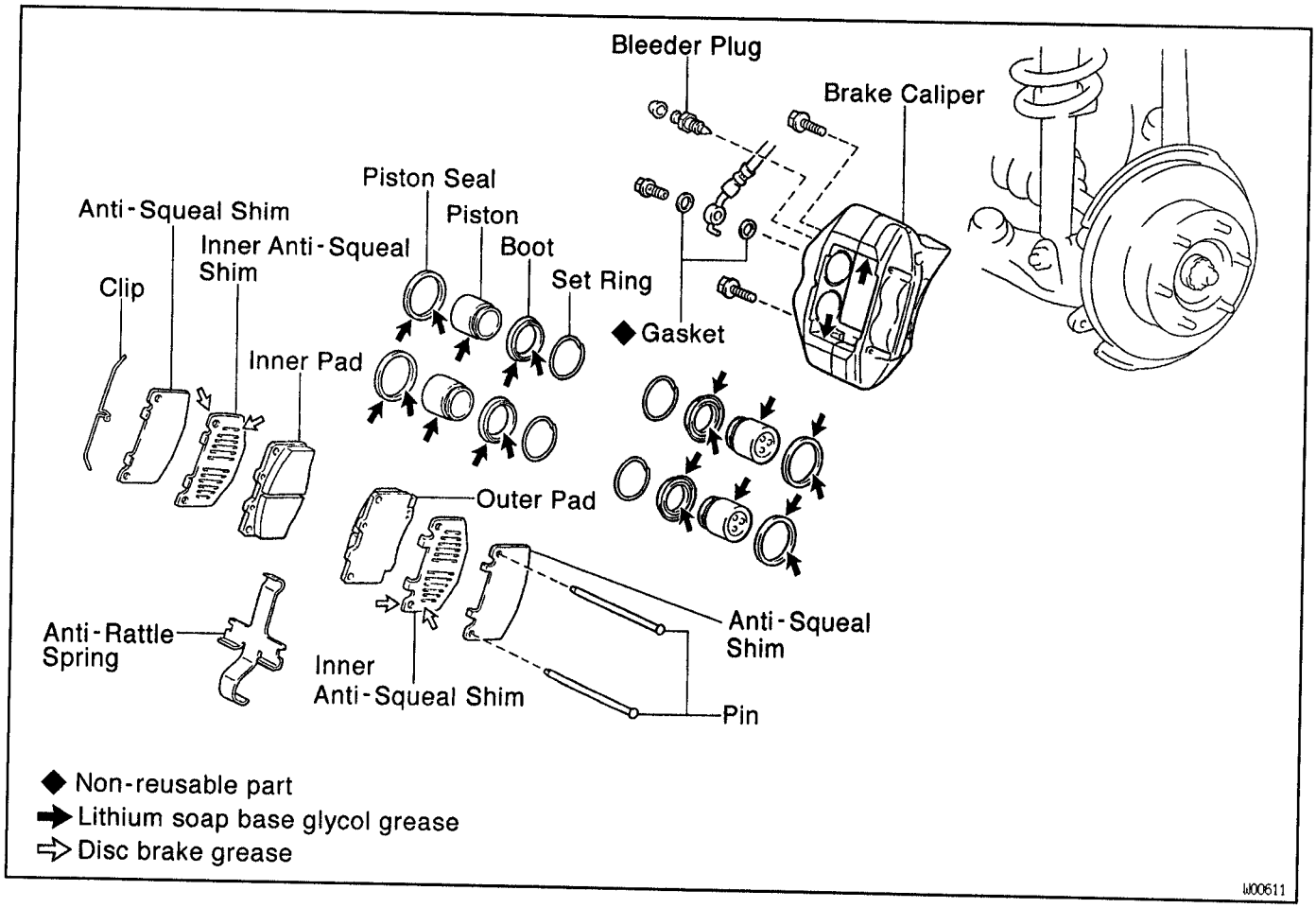

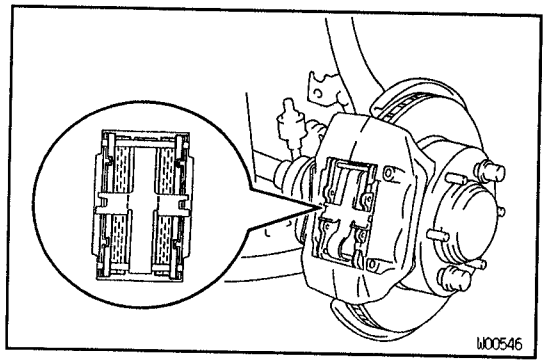

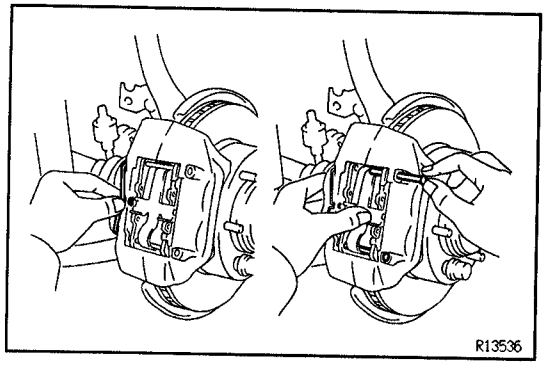

BRAKE PADS REPLACEMENT

BR0ZK–04

1. **REMOVE FRONT WHEEL**
2. **INSPECT PAD LINING THICKNESS**
   Check the pad thickness and replace pads if not within specification.
   Minimum thickness:
   1.0 mm (0.039 in.)
3. **REMOVE THESE PARTS:**
   - Clip
   - 2 pins
   - Anti–rattle spring
   - 2 pads
   - 4 anti–squeal shims

NOTICE: The anti–rattle spring can be used again provided that they have sufficient rebound, no deformation, cracks or wear, and have had all rust, dirt and foreign particles cleaned off.

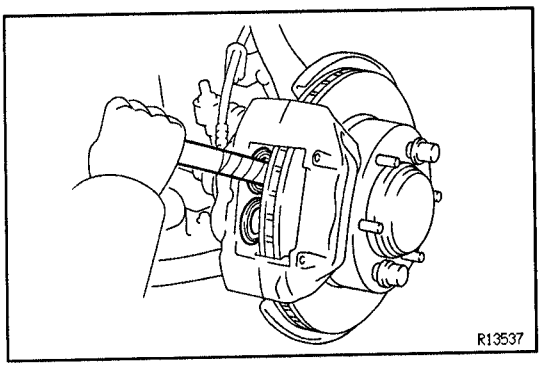

4. **CHECK DISC THICKNESS AND RUNOUT**
(See page BR–20)
5. **INSTALL NEW PADS**
NOTICE: When replacing worn pads, the anti–squeal shims must be replaced together with the pads.

(a) Draw out a small amount of brake fluid from the reservoir.

(b) Press in the pistons with a monkey wrench handle or equivalent.
HINT:
- Tape the monkey wrench handle before use.
- Always change the pad on one wheel at a time as there is a possibility of the opposite piston flying out.
- If the piston is difficult to push in, loosen the bleeder plug and push in the piston while letting some brake fluid escape.

(c) Install the anti–squeal shims to new pads.
HINT: Apply disc brake grease to inside of the anti–squeal shims (See page BR–17).

(d) Install the 2 pads.
NOTICE: Do not allow oil or grease to get on the rubbing face.

6. **INSTALL ANTI–RATTLE SPRING AND 2 PINS**
7. **INSTALL CLIP**

BR

BR0ZL–04

CALIPER REMOVAL

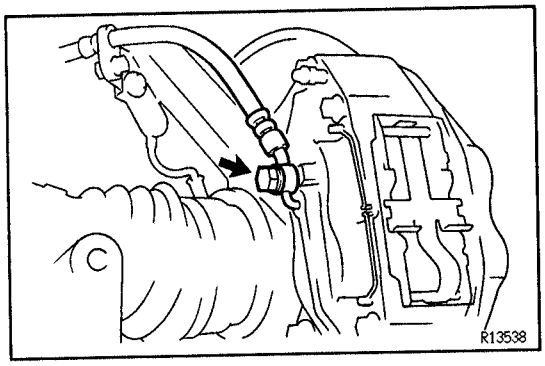

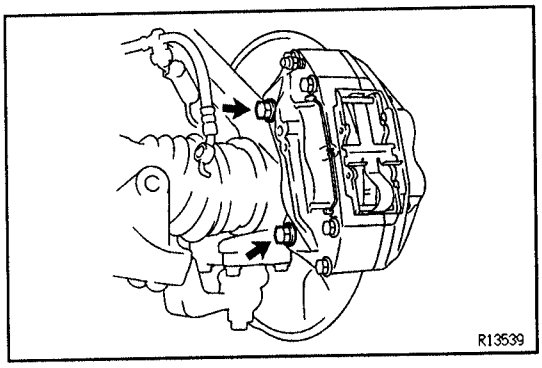

1. **REMOVE FRONT WHEEL**
2. **DISCONNECT BRAKE LINE**
Torque: 30 N·m (310 kgf·cm, 22 ft·lbf)
3. **REMOVE CALIPER**
Remove the 2 mounting bolts and caliper.
Torque: 123 N·m (1,250 kgf·cm, 90 ft·lbf)
4. **REMOVE THESE PARTS:**
- Clip
- 2 pins
- Anti–rattle spring
- 2 pads
- 4 anti–squeal shims

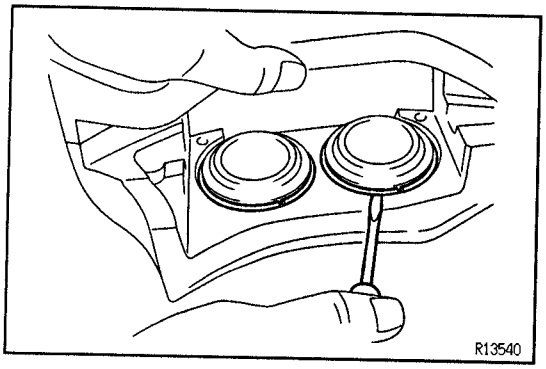

CALIPER DISASSEMBLY

BR0BO-0M

1. **REMOVE CYLINDER BOOT SET RINGS AND BOOTS**
Using a screwdriver, remove the 4 cylinder boot set rings and boots.

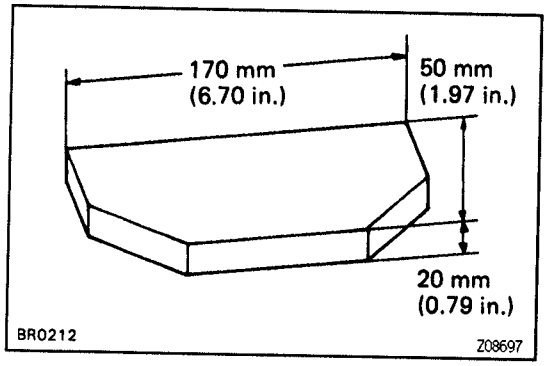

2. **REMOVE PISTONS FROM CYLINDER**

(a) Prepare the wooden plate to hold the pistons.

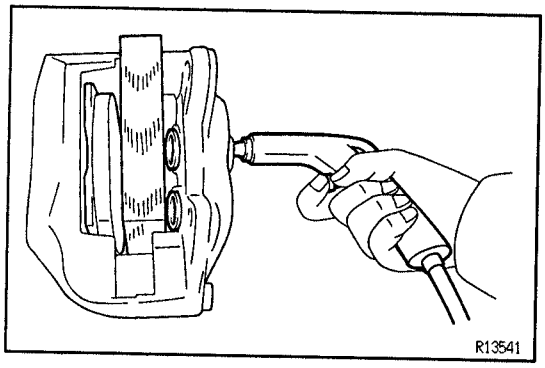

(b) Place the plate between the pistons and insert a pad at one side.

(c) Use compressed air to remove the pistons alternately from the cylinder.

DISASSEMBLY CAUTION: Do not place your fingers in front of the pistons when using compressed air.

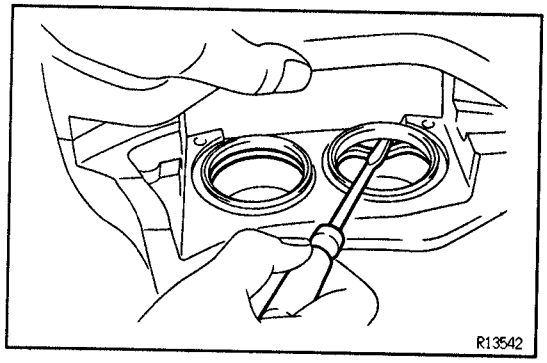

3. **REMOVE PISTON SEALS**
Using a screwdriver, remove the 4 seals from the cylinder.

BR

CALIPER ASSEMBLY

BR1AS-01

Assembly is in the reverse order of disassembly.
ASSEMBLY NOTICE: Apply lithium soap base glycol grease to the parts indicated by the arrows (See page BR –17).

BR1AT-01

FRONT BRAKE COMPONENTS INSPECTION AND REPAIR

1. MEASURE PAD LINING THICKNESS

(See step 1. on page BR–16)

Standard thickness:

11.5 mm (0.453 in.)

Minimum thickness:

1.0 mm (0.039 in.)

2. MEASURE DISC THICKNESS

(See step 2. on page BR–16)

Standard thickness:

22.0 mm (0.866 in.)

Minimum thickness:

20.0 mm (0.787 in.)

3. MEASURE DISC RUNOUT

(a) Tighten the disc with the 3 hub nuts.

(b) Using a dial indicator, measure the disc runout at a position 10 mm (0.39 in.) from the outside edge.

Maximum disc runout:

0.07 mm (0.0028 in.)

If the runout is greater than maximum, replace the disc.

HINT: Before measuring the runout, confirm that the front bearing play is within specification.

4. IF NECESSARY, ADJUST DISC RUNOUT

(a) Remove the hub nuts and disc. Reinstall the disc 1/6 of a turn round from its original position on the hub. Install and torque the hub nuts.

Remeasure the disc runout. Make a note of the runout and the disc's position on the hub.

(b) Repeat (a) until the disc has been installed on the 4 remaining hub position.

(c) If the minimum runout recorded in (a) and (b) is less than maximum disc runout, install the disc in that position.

(d) If the minimum runout recorded in (a) and (b) is greater than maximum disc runout, replace the disc and repeat step 3.

BR

BR1AU-01

CALIPER INSTALLATION

Installation is in the reverse order of removal.

AFTER INSTALLATION, FILL BRAKE RESERVOIR WITH BRAKE FLUID, BLEED BRAKE SYSTEM (See page BR–5) AND CHECK FOR LEAKS

REAR BRAKE (2WD)

COMPONENTS

BR0B4-0A

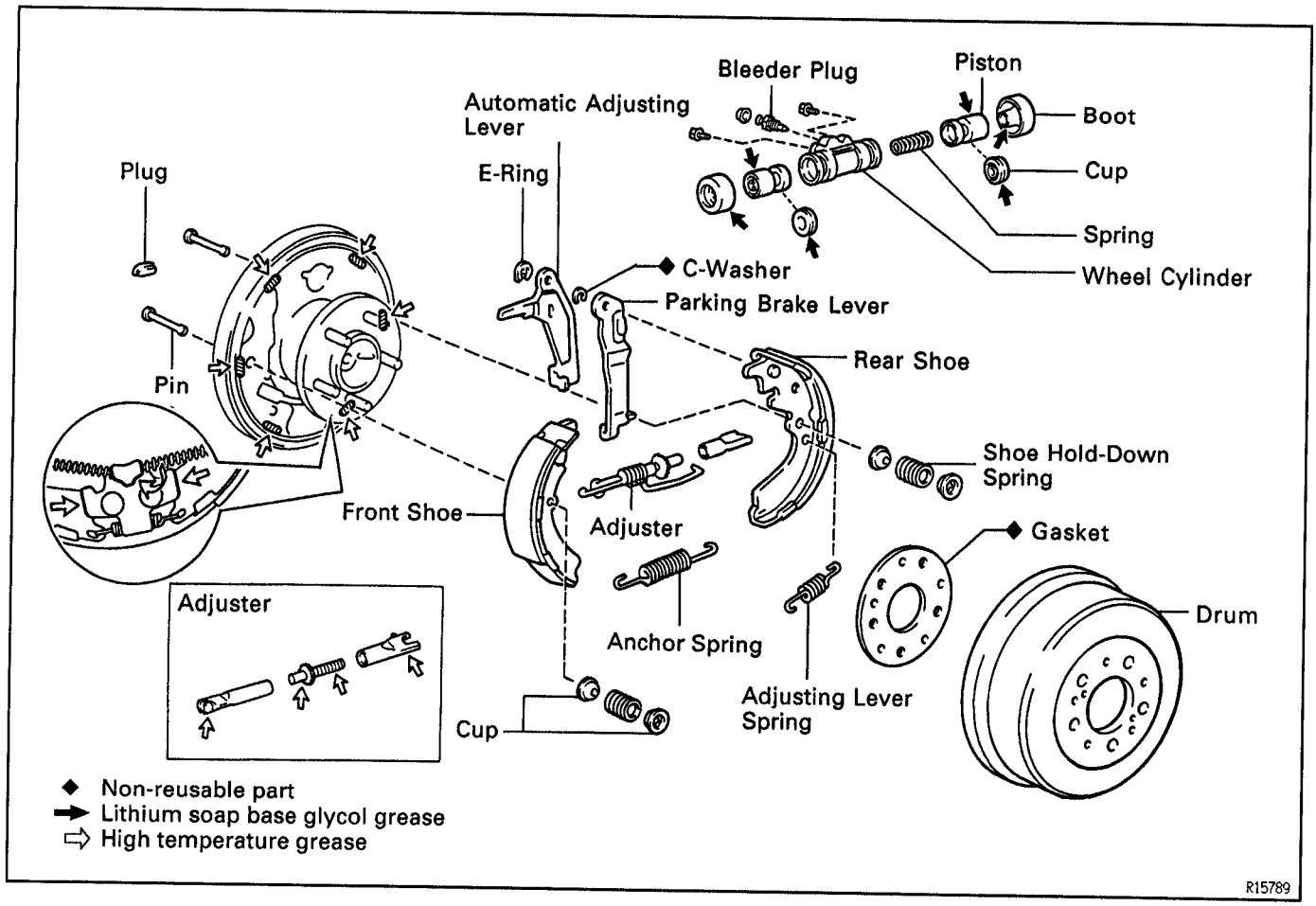

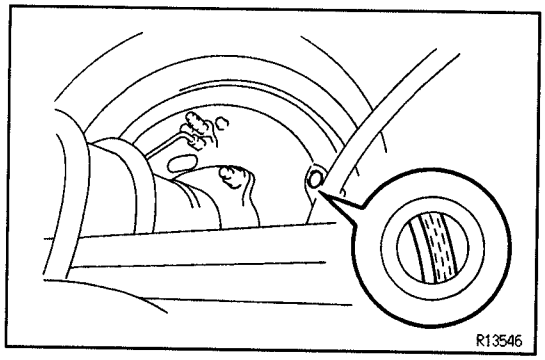

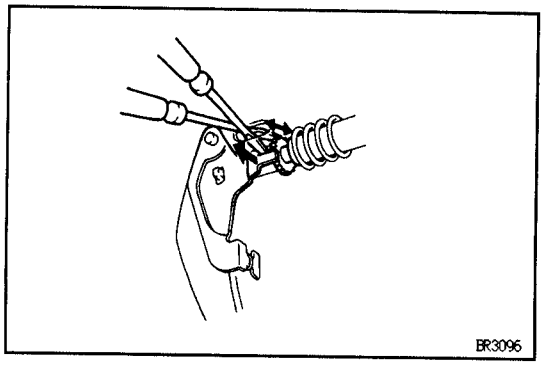

REAR BRAKE REMOVAL

BR0ZM-04

BR

1. **INSPECT SHOE LINING THICKNESS**

Remove the inspection hole plug, and check the shoe lining thickness through the hole.

If it is less than minimum, replace the shoes.

Minimum thickness:

1.0 mm (0.039 in.)

2. **REMOVE REAR WHEEL**

3. **REMOVE BRAKE DRUM**

HINT: If the brake drum cannot be removed easily, do the following steps.

(a) Insert a screwdriver through the hole in the backing plate, and hold the automatic adjusting lever away from the adjusting bolt.

(b) Using another screwdriver, reduce the brake shoe adjustment by turning the adjusting bolt.

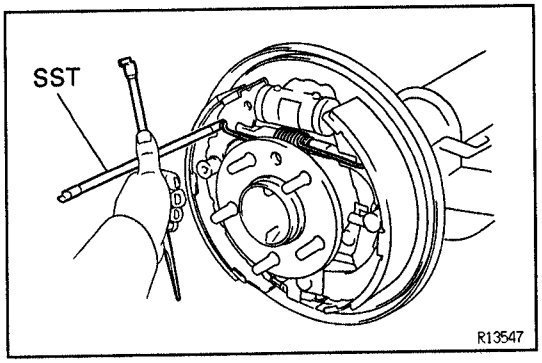

4. REMOVE FRONT SHOE

(a) Using SST, disconnect the return spring.
SST 09703–30010

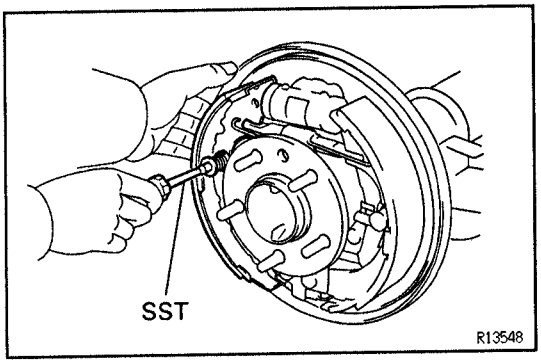

(b) Using SST, remove the shoe hold–down spring, cups and pin.
SST 09718–00010

(c) Disconnect the anchor spring from the front shoe and remove the front shoe.

(d) Remove the anchor spring from the rear shoe.

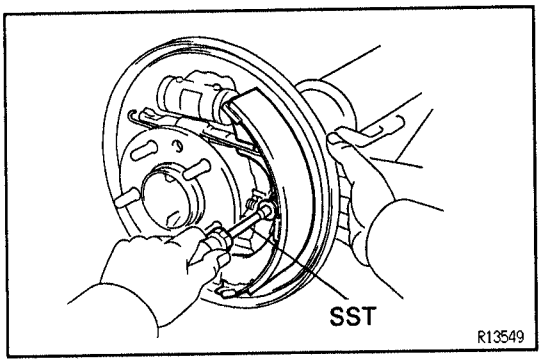

5. REMOVE ADJUSTER AND REAR SHOE

(a) Using SST, remove the shoe hold–down spring, cups and pin.
SST 09718–00010

(b) Remove the adjusting lever spring.

(c) Remove the adjuster together with the return spring.

(d) Using pliers, disconnect the parking brake cable from the lever and remove the rear shoe.

BR

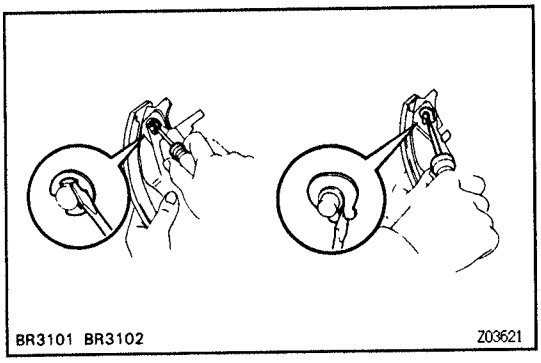

6. REMOVE AUTOMATIC ADJUSTING LEVER AND PARKING BRAKE LEVER

(a) Remove the E–ring.

(b) Remove the automatic adjusting lever.

(c) Remove the C–washer.

(d) Remove the parking brake lever.

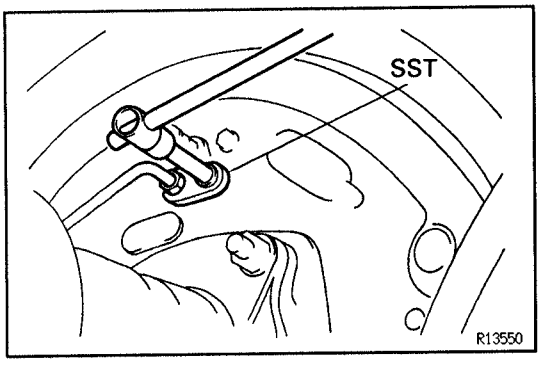

7. DISCONNECT BRAKE LINE FROM WHEEL CYLINDER

Using SST, disconnect the brake line. Use a container to catch the brake fluid.
SST 09023–00100
Torque: 15 N·m (155 kgf·cm, 11 ft·lbf)

8. REMOVE WHEEL CYLINDER

Remove the 2 bolts and wheel cylinder.
Torque: 10 N·m (100 kgf·cm, 7 ft·lbf)

9. DISASSEMBLE WHEEL CYLINDER

Remove the these parts from the wheel cylinder.

- 2 boots
- 2 pistons
- 2 piston cups
- Spring

REAR BRAKE COMPONENTS INSPECTION AND REPAIR BR0B6-0A

1. INSPECT DISASSEMBLED PARTS

Inspect the disassembled parts for wear, rust or damage.

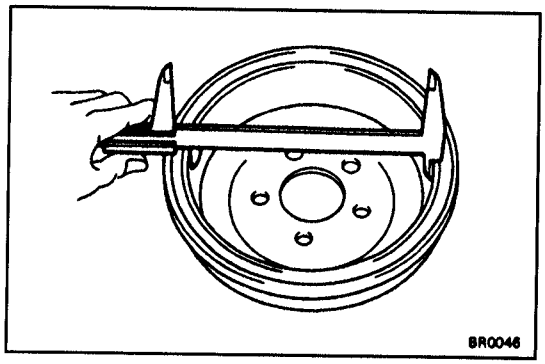

2. MEASURE BRAKE DRUM INSIDE DIAMETER

Using a vernier calipers, measure the inside diameter of the drum.

Standard inside diameter:

254.0 mm (10.000 in.)

Maximum inside diameter:

256.0 mm (10.079 in.)

If the drum is scored or worn, the brake drum may be lathed to the maximum inside diameter.

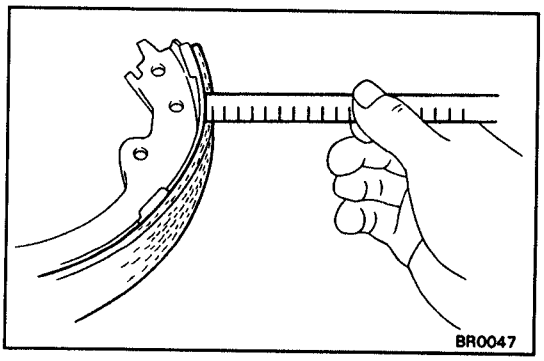

3. MEASURE BRAKE SHOE LINING THICKNESS

Using a ruler, measure the shoe lining thickness.

Standard thickness:

5.5 mm (0.217 in.)

Minimum thickness:

1.0 mm (0.039 in.)

If the shoe lining is less than minimum, or shows signs of uneven wear, replace the brake shoes.

HINT: If any of the brake shoes have to be replaced, replace all of the rear brake shoes in order to maintain even braking.

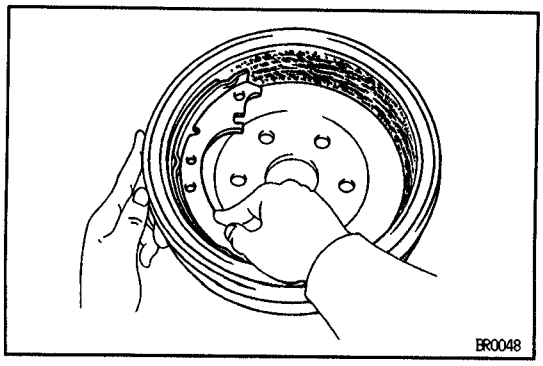

4. INSPECT BRAKE LINING AND DRUM FOR PROPER CONTACT

If the contact between the brake lining and drum is improper, repair the lining with a brake shoe grinder, or replace the brake shoe assembly.

BR1AV-01

REAR BRAKE INSTALLATION

Installation is in the reverse order of removal.
AFTER INSTALLATION, FILL BRAKE RESERVOIR WITH BRAKE FLUID, BLEED BRAKE SYSTEM (See page BR-5) AND CHECK FOR LEAKS
NOTICE: Apply lithium soap base glycol grease and high temperature grease to the parts indicated by the arrows (See page BR-21).

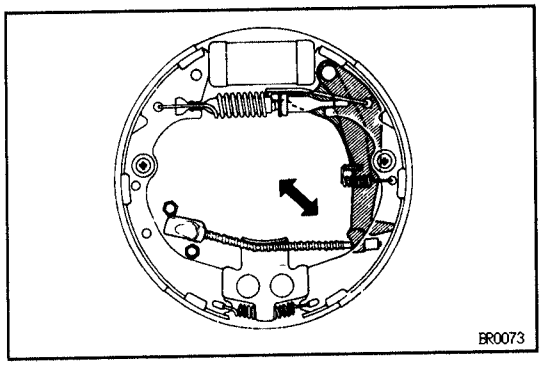

1. CHECK OPERATION OF AUTOMATIC ADJUSTER MECHANISM

(a) Move the parking brake lever of the rear shoe back and forth, as shown. Check that the adjusting bolt turns.
If it does not turn, check for incorrect installation of the rear brakes.

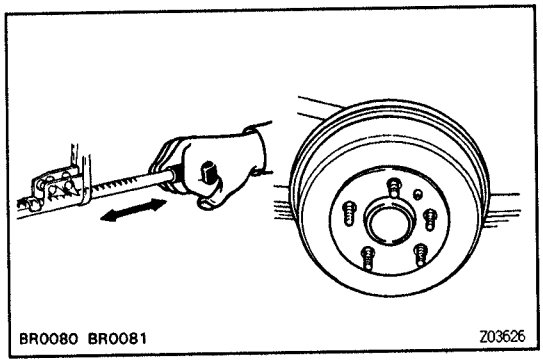

(b) Adjust the adjuster length to the shortest possible amount.
(c) Install the drum.
(d) Pull the parking brake lever all the way up until a clicking sound can no longer be heard.

BR

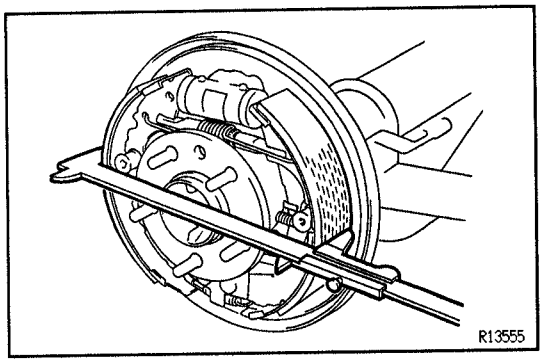

2. CHECK CLEARANCE BETWEEN BRAKE SHOES AND DRUM

(a) Remove the drum.
(b) Measure the brake drum inside diameter and diameter of the brake shoes. Check that the difference between the diameters is the correct shoe clearance.
Shoe clearance:
0.6 mm (0.024 in.)
If it is incorrect, check the parking brake system.

REAR BRAKE (4WD)

COMPONENTS

BR0BS–06

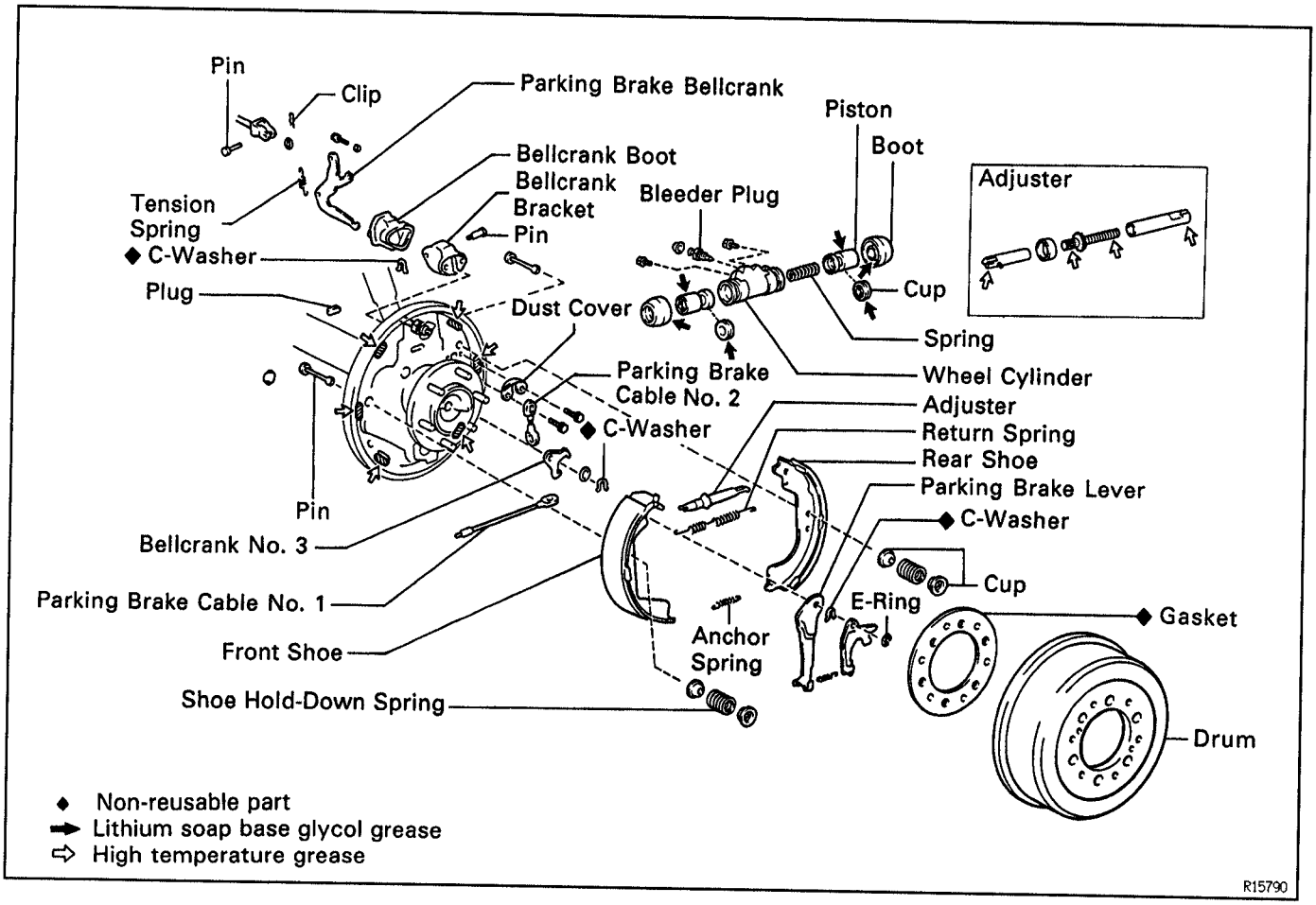

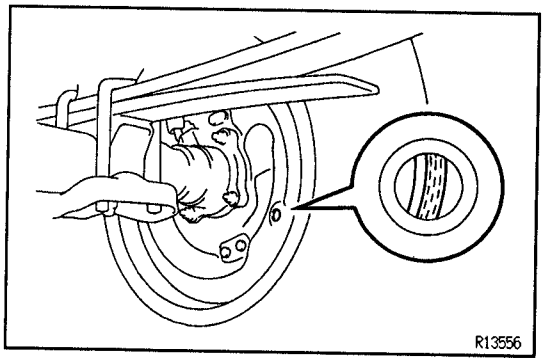

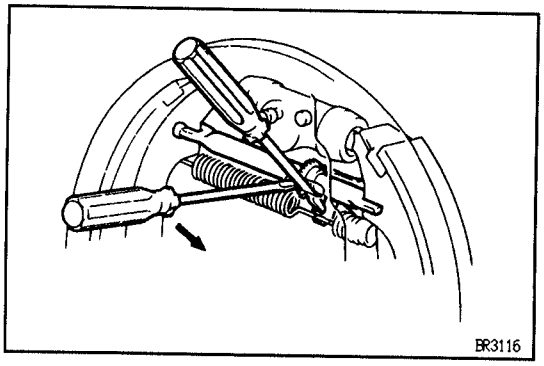

REAR BRAKE REMOVAL

BR12B–02

BR

1. **INSPECT SHOE LINING THICKNESS**
   Remove the inspection hole plug, and check the shoe lining thickness through the hole.
   If less than minimum, replace the shoes.
   Minimum thickness:
   1.0 mm (0.039 in.)
2. **REMOVE REAR WHEEL**
3. **REMOVE BRAKE DRUM**
   HINT: If the brake drum cannot be removed easily, do the following steps.
   (a) Remove the adjusting hole plug in the backing plate.
   (b) Insert a screwdriver through the hole in the backing plate, and hold the automatic adjusting lever away from the adjusting bolt.
   (c) Using another screwdriver, reduce the brake shoe adjustment by turning the adjusting bolt.

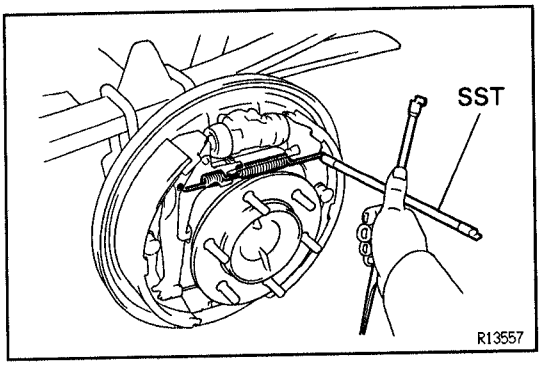

4. REMOVE REAR SHOE

(a) Using SST, disconnect the return spring.
SST 09703–30010

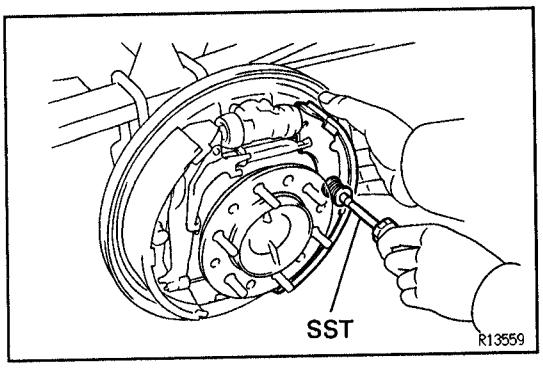

(b) Using SST, remove the shoe hold–down spring, cups and pin.
SST 09718–00010

(c) Disconnect the anchor spring from the rear shoe and remove the rear shoe.

(d) Remove the anchor spring from the front shoe.

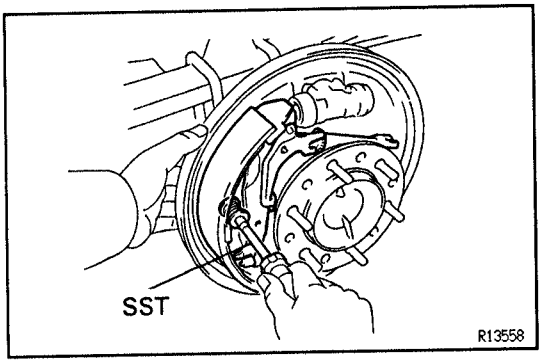

5. REMOVE FRONT SHOE

(a) Using SST, remove the shoe hold–down spring, cups and pin.
SST 09718–00010

(b) Remove the return spring from the front shoe.

(c) Disconnect the parking brake cable No.1 from the parking brake bellcrank No.3.

(d) Remove the front shoe with adjuster.

(e) Disconnect the parking brake cable from the front shoe.

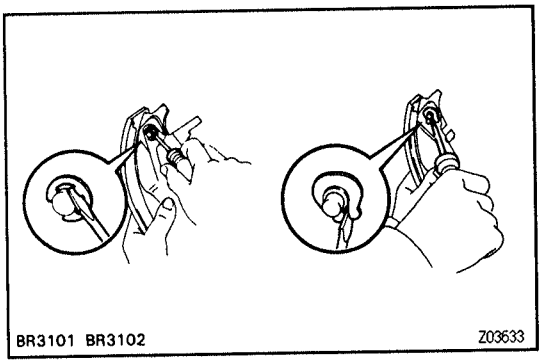

6. REMOVE ADJUSTER FROM FRONT SHOE

(a) Remove the adjusting lever spring.

(b) Remove the adjuster.

7. REMOVE AUTOMATIC ADJUSTING LEVER AND PARKING BRAKE LEVER

(a) Remove the E–ring.

(b) Remove the automatic adjusting lever.

(c) Remove the C–washer.

(d) Remove the parking brake lever.

8. REMOVE AND DISASSEMBLE PARKING BRAKE BELLCRANK

(a) Remove the clip and disconnect the parking brake cable.

(b) Remove the tension spring.

BR

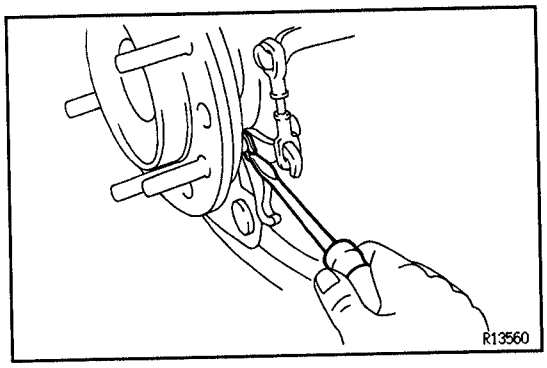

(c) Using a screwdriver, remove the bellcrank No.3 from the backing plate with parking brake cable No.2.
(d) Remove the parking brake bellcrank No.1 or No.2 and dust cover with the 2 bolts.
(e) Remove the bellcrank boot from the bellcrank bracket.

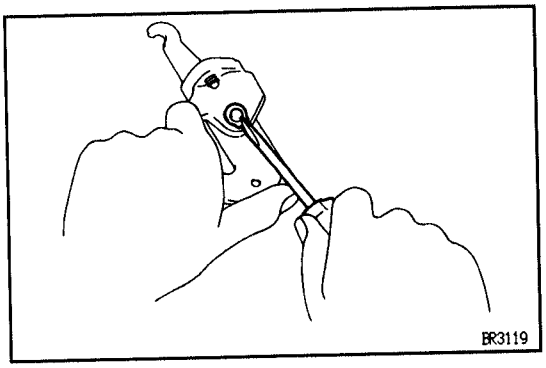

(f) Remove the C–washer and pin.
(g) Remove the parking brake bellcrank from the bellcrank bracket.

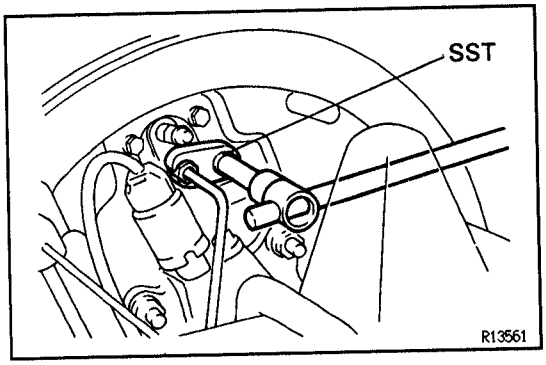

9. REMOVE WHEEL CYLINDER

(a) Using SST, disconnect the brake line. Use a container to catch the brake fluid.
SST 09023–00100
(b) Remove the 2 bolts and the wheel cylinder.

10. DISASSEMBLE WHEEL CYLINDER

Remove the these parts from the wheel cylinder.
- 2 boots
- 2 pistons
- 2 piston cups
- Spring

REAR BRAKE COMPONENTS INSPECTION AND REPAIR

BR1AW–01

1. INSPECT DISASSEMBLED PARTS

Inspect the disassembled parts for wear, rust or damage.

2. MEASURE BRAKE SHOE LINING THICKNESS

(See step 1. on page BR–23)

Standard thickness:
6.0 mm (0.236 in.)
Minimum thickness:
1.0 mm (0.039 in.)

3. MEASURE BRAKE DRUM INSIDE DIAMETER

(See step 2. on page BR–23)

Standard inside diameter:
295.0 mm (11.614 in.)
Maximum inside diameter:
297.0 mm (11.693 in.)

4. **INSPECT REAR BRAKE LINING AND DRUM FOR PROPER CONTACT**
(See step 4. on page BR–23)

REAR BRAKE INSTALLATION

BR1AX–01

Installation is in the reverse order of removal.
AFTER INSTALLATION, FILL BRAKE RESERVOIR WITH BRAKE FLUID, BLEED BRAKE SYSTEM (See page BR–5) AND CHECK FOR LEAKS
NOTICE: Apply lithium soap base glycol grease and high temperature grease to the parts indicated by the arrows (See page BR–25).

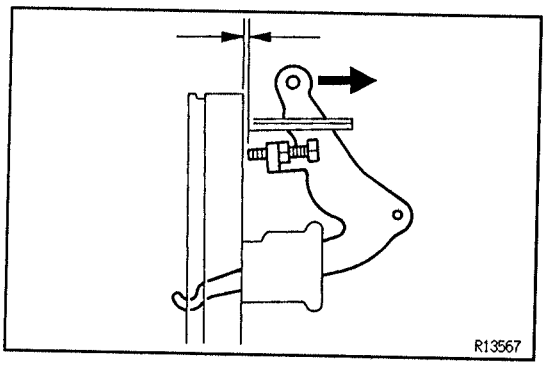

1. **ADJUST BELLCRANK**
(a) Lightly pull the bellcrank in direction A until there is no slack at part B.
(b) In this condition, turn the adjusting bolt so that dimension C will be 0.4–0.8 mm (0.016–0.031 in.).
(c) Lock the adjusting bolt with the lock nut.
(d) Connect the parking brake cable to the parking brake bellcrank and install the clip.
(e) Install the tension spring.
2. **CHECK OPERATION OF AUTOMATIC ADJUSTING MECHANISM**
(See step 1. on page BR–24)
3. **CHECK CLEARANCE BETWEEN BRAKE SHOES AND DRUM**
(See step 2. on page BR–24)
Shoe clearance:
0.6 mm (0.024 in.)

LOAD SENSING PROPORTIONING AND BY–PASS VALVE (LSP & BV)

BR0BC–0A

COMPONENTS

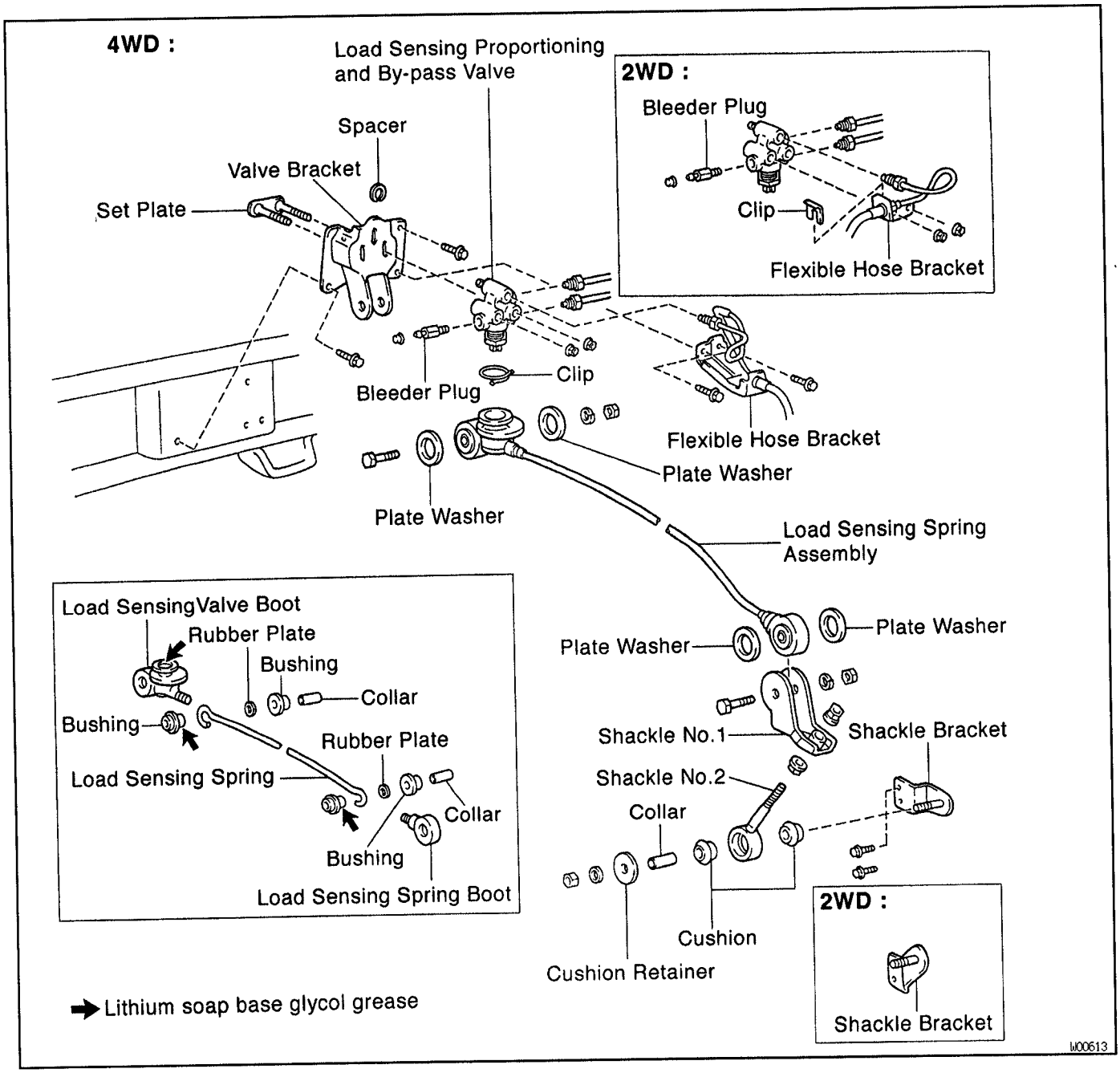

BR0DQ–09

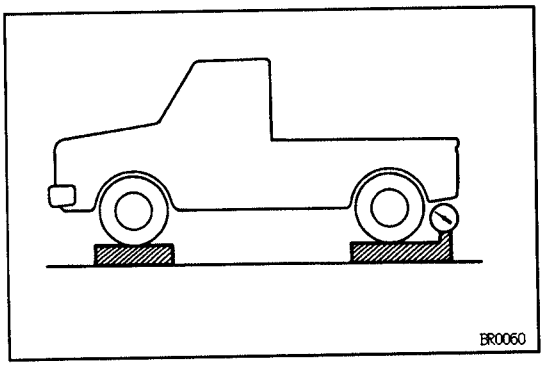

FLUID PRESSURE INSPECTION

1. SET REAR AXLE LOAD

Rear axle load (includes vehicle weight):

2WD:

700 kg (1,543 lb)

4WD:

850 kg (1,874 lb)

BR

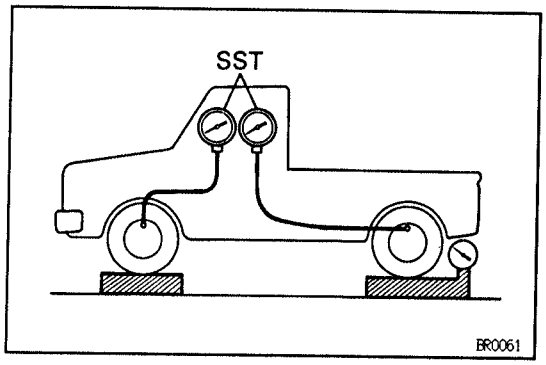

2. INSTALL LSP & BV GAUGE (SST) AND BLEED AIR
SST 09709–29017

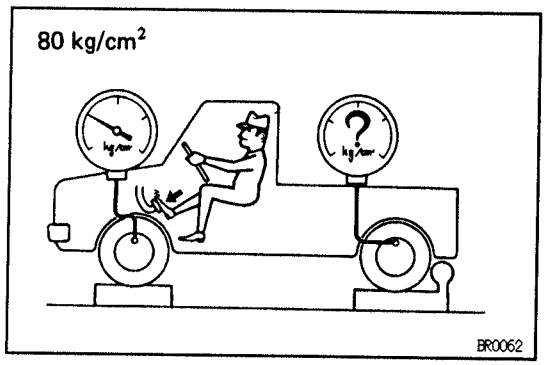

3. RAISE FRONT BRAKE PRESSURE TO 7,845 kPa (80 kgf/cm², 1,138 psi) AND CHECK REAR BRAKE PRESSURE

Rear brake pressure:

2WD:

4,913±490 kPa (50.1±5 kgf/cm², 713±71 psi)

4WD:

4,383±490 kPa (44.7±5 kgf/cm², 636±71 psi)

HINT: The brake pedal should not be depressed twice and/or returned while setting to the specified pressure. Read the value of rear brake pressure 2 seconds after adjusting the specified fluid pressure. If the brake pressure is incorrect, adjust the fluid pressure.

BR

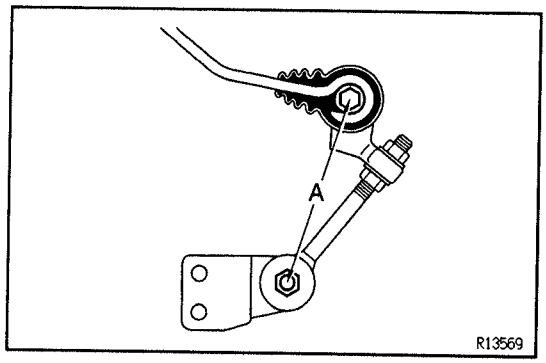

4. IF NECESSARY, ADJUST FLUID PRESSURE

(a) Adjust the length of the No.2 shackle.

Low pressure: Lengthen A

High pressure: Shorten A

Initial set:

2WD: 78 mm (3.07 in.)

4WD: 120 mm (4.72 in.)

Adjustment range:

2WD: 72–84 mm (2.83–3.31 in.)

4WD: 114–126 mm (4.49–4.96 in.)

HINT: One turn of the nut changes the fluid pressure as shown in the following table.

Model	Rear brake pressure kPa (kgf/cm², psi)
2WD	55 (0.56, 8)
4WD	52 (0.53, 7.5)

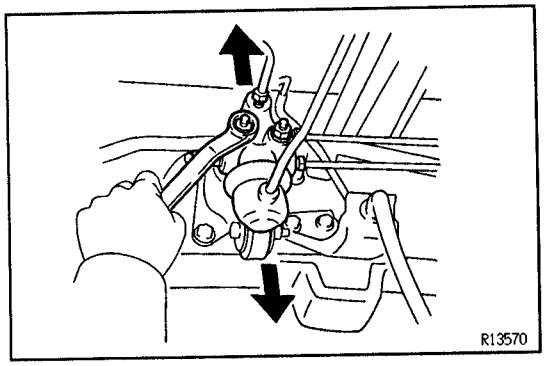

(b) If the pressure cannot be adjusted by the No.2 shackle, raise or lower the valve body.
Low pressure–Lower body
High pressure–Raise body

(c) Torque the nuts.
Torque: 13 N·m (130 kgf·cm, 9 ft·lbf)

(d) Adjust the length of the No.1 shackle again.
If it cannot be adjusted, inspect the valve housing.

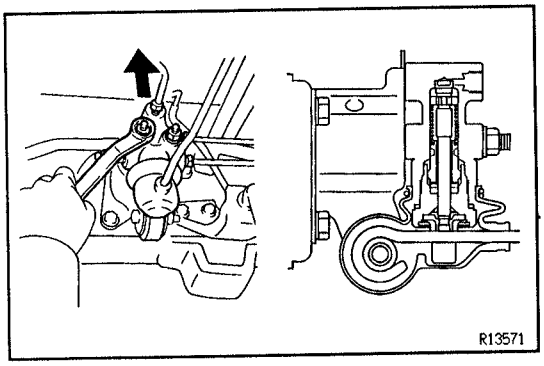

5. IF NECESSARY, CHECK VALVE BODY

(a) Assemble the valve body in the uppermost position.
HINT: When the brakes are applied, the piston will move down about 0.8 mm (0.03 in.). Even at this time, the piston should not make contact with or move the load sensing spring.

(b) In this position, check the rear brake pressure.
2WD:

Front brake pressure kPa (kgf/cm², psi)	Rear brake pressure kPa (kgf/cm², psi)
1,960 (20, 285)	1,960 (20, 285)
3,920 (40, 570)	2,450±196 (25±2, 356±28.5)
6,860 (70, 997.5)	3,190±343 (32.5±3.5, 463±50)

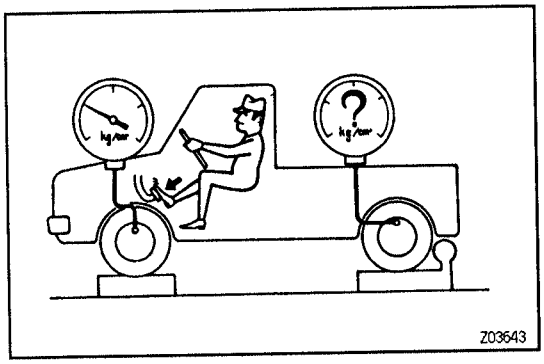

4WD:

Front brake pressure kPa (kgf/cm², psi)	Front brake pressure kPa (kgf/cm², psi)
1,470 (15, 213.5)	1,470 (15, 213.5)
3,920 (40, 570)	1,960±196 (20±2, 285±28.5)
6,860 (70, 997.5)	2,550±343 (26±3.5, 370.5±50)

If the measured value is not within standard, replace the valve body.

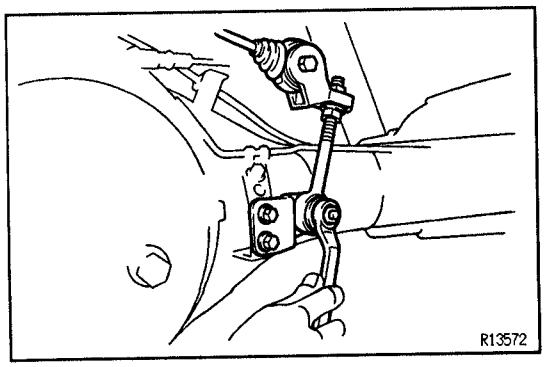

BR08E–0C

LSP & BV REMOVAL

1. DISCONNECT SHACKLE NO.2 FROM BRACKET

(a) Remove the nut and disconnect the shackle No. 2.

(b) Remove the cushion retainer, 2 cushions and collar.

2. REMOVE LSP & BV ASSEMBLY

(a) Using SST, disconnect the brake lines from the valve body.
SST 09023–00100

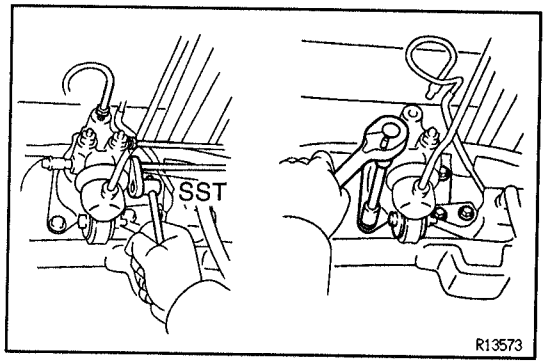

(b) Remove the clip from the flexible hose bracket.
(c) 2WD:
Remove the 3 valve bracket mounting bolts and spacer, and remove the LSP & BV assembly.
4WD:
Remove the 3 valve bracket mounting bolts, spacer and flexible hose bracket mounting bolt, and remove the LSP & BV assembly and flexible hose bracket.

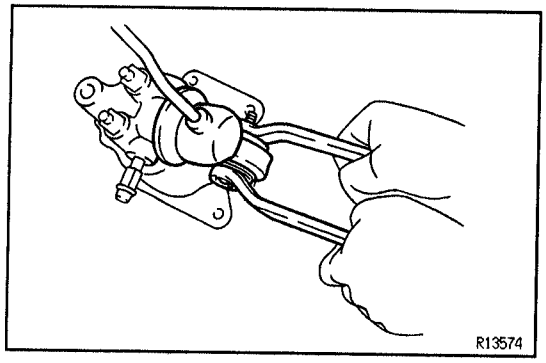

LSP & BV DISASSEMBLY

BR0BF–0C

1. REMOVE VALVE BRACKET

(a) Remove the nut, bolt and 2 plate washers.
(b) 2WD:
Remove the 2 nuts and flexible hose bracket, and remove the valve bracket and set plate from the valve body.
4WD:
Remove the 2 nuts, and remove the valve bracket and set plate from the valve body.

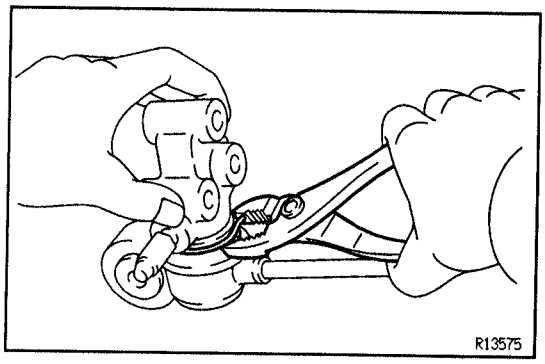

2. DISCONNECT SPRING FROM VALVE

Using pliers, remove the clip, and remove the spring from the valve.

BR

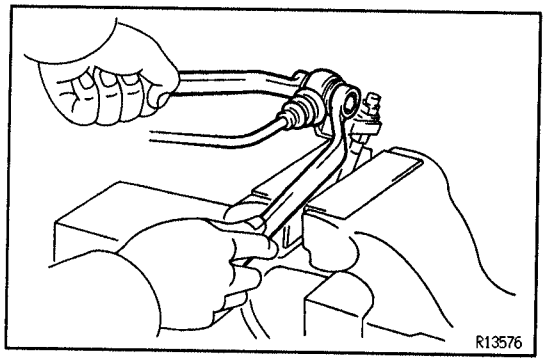

3. REMOVE SHACKLES NO.1 AND NO.2

(a) Remove the nuts and bolts, and remove the load sensing spring and 2 plate washers.
(b) Loosen the 2 nuts, and remove the shackle No. 1 from the shackle No. 2.

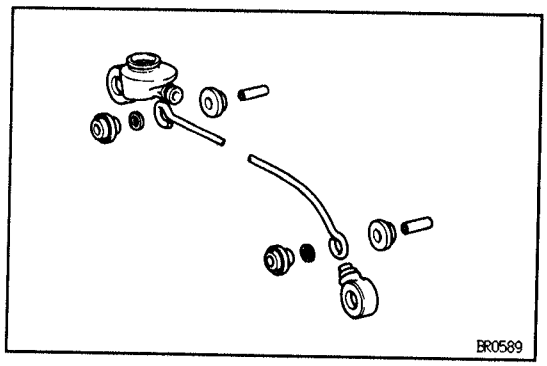

4. DISASSEMBLE LOAD SENSING SPRING

Disassemble the these parts.
(a) 4 bushings
(b) 2 collars
(c) 2 rubber plates
(d) Load sensing valve boot
(e) Load sensing spring boot

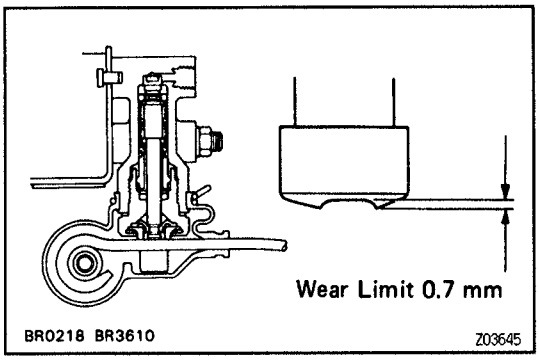

BR0BG–08

LSP & BV INSPECTION

INSPECT VALVE PISTON PIN AND LOAD SENSING CONTACT SURFACE FOR WEAR

Wear limit:

0.7 mm (0.028 in.)

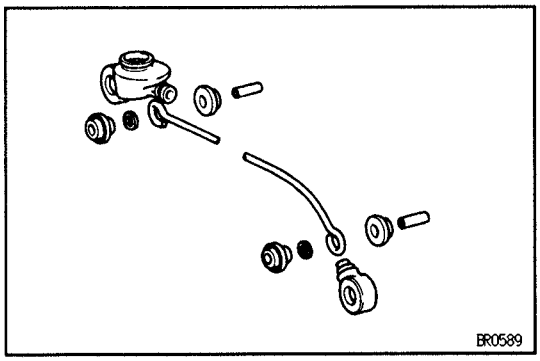

BR12D–02

LSP & BV ASSEMBLY

1. **ASSEMBLE THESE PARTS TO LOAD SENSING SPRING:**

(a) Load sensing valve boot
(b) Load sensing spring boot
(c) 4 bushings
(d) 2 rubber plates
(e) 2 collars

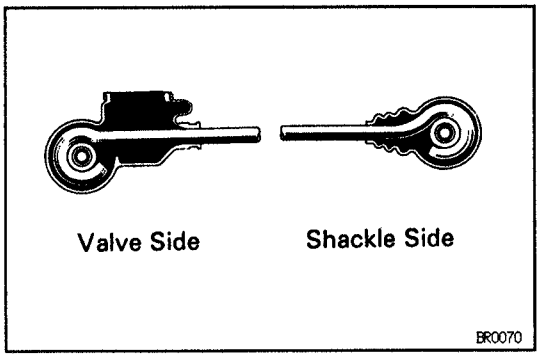

HINT: Apply lithium soap–base glycol grease to all rubbing areas.
Do not mistake the valve side for the shackle side of the load sensing spring.

2. **INSTALL SHACKLE NO. 1 AND NO. 2**

(a) Install the lock nut and shackle No. 1 to the shackle No.2.
(b) Torque the nut.
Torque: 24 N·m (250 kgf·cm, 18 ft·lbf)

3. **INSTALL LOAD SENSING SPRING TO SHACKLE NO.1**

(a) Install the load sensing spring and 2 plate washer to the shackle No.1.
(b) Torque the bolt and nut.
Torque: 18 N·m (185 kgf·cm, 13 ft·lbf)

4. **INSTALL LOAD SENSING SPRING TO VALVE BODY**

Install the load sensing spring to the load sensing value with the clip.

5. **INSTALL VALVE BRACKET**

(a) 2WD:
Install the set plate to the valve assembly through the value bracket and temporarily tighten the 2 valve body mounting nuts with flexible hose bracket.
4WD:
Install the set plate to the valve assembly through the valve bracket and temporarily tighten the 2 valve body mounting nuts.
(b) Torque the bolt and nut with the 2 plate washers.
Torque: 18 N·m (185 kgf·cm, 13 ft·lbf)

BR

BR1AY–01

LSP & BV INSTALLATION

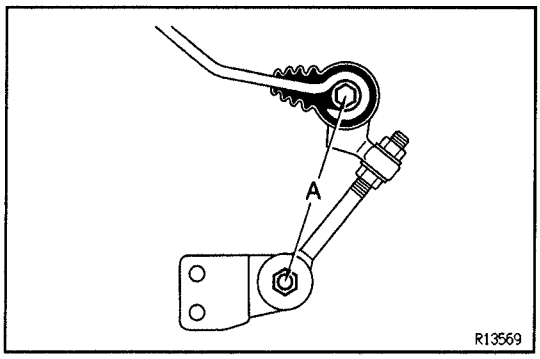

1. **INSTALL LSP & BV ASSEMBLY TO FRAME**
   2WD:
   Install the 3 valve bracket mounting bolts and spacer with the LSP & BV.
   4WD:
   Install the 3 valve bracket mounting bolts, spacer and flexible hose bracket mounting bolt with the LSP & BV assembly and flexible hose bracket.
   Torque: 29 N·m (300 kgf·cm, 22 ft·lbf)
2. **CONNECT BRAKE LINE**
   Using SST, connect the brake lines.
   Torque: 15 N·m (155 kgf·cm, 11 ft·lbf)
   SST 09023–00100
3. **CONNECT SHACKLE NO.2 BRACKET**

(a) Set dimension A.
Initial set:
2WD: 78 mm (3.07 in.)
4WD: 120 mm (4.72 in.)

(b) Tighten the lock nut.
Torque: 24 N·m (250 kgf·cm, 18 ft·lbf)

(c) Install the shackle No. 2 with the 2 cushions and collar to the shackle bracket.

(d) Torque the nut with the cushion retainer.
Torque: 13 N·m (130 kgf·cm, 9 ft·lbf)

BR

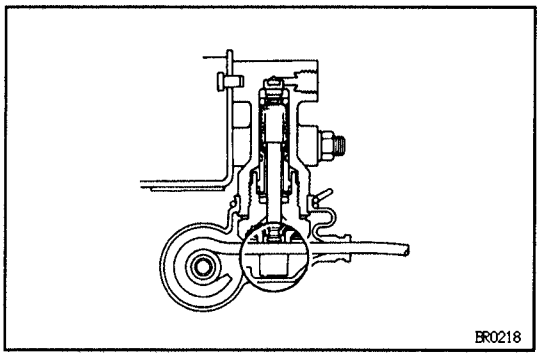

4. **SET REAR AXLE LOAD**
   (See page BR–29)
5. **SET VALVE BODY**

(a) When pulling down the load sensing spring, confirm that the valve piston moves down smoothly.

(b) Position the valve body so that the valve piston lightly contacts the load sensing spring.

(c) Tighten the valve body mounting nuts.

6. **BLEED BRAKE LINE**
   (See page BR–5)
7. **CHECK AND ADJUST LSP & BV FLUID PRESSURE**
   (See page BR–30)

ANTI–LOCK BRAKE SYSTEM (ABS)

ABS ACTUATOR

COMPONENTS

BR0WX–03

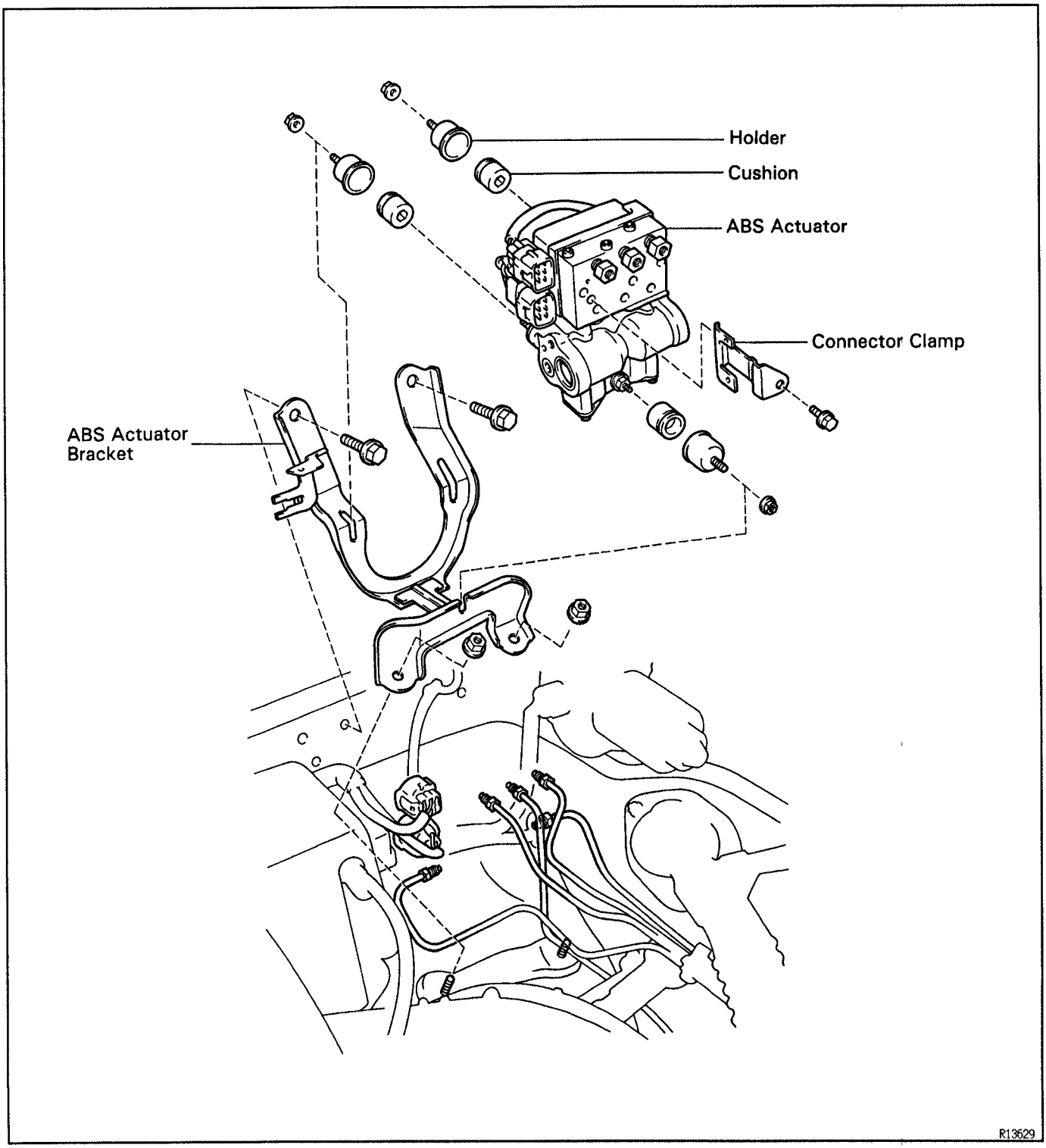

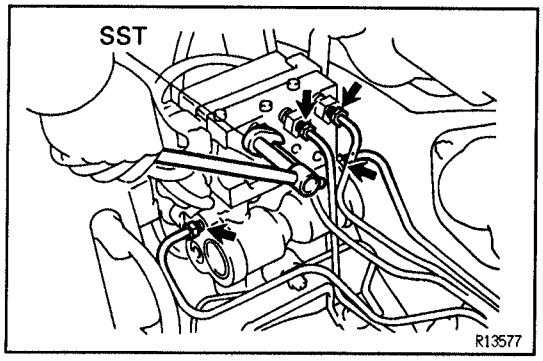

ABS ACTUATOR REMOVAL

BR0WY–03

1. **DISCONNECT BRAKE LINES**
   Using SST, disconnect the 5 brake lines from the ABS actuator.
   SST 09023–00100
   Torque: 15 N·m (155 kgf·cm, 11 ft·lbf)
2. **DISCONNECT CONNECTORS**
   Disconnect the 2 connectors from the actuator.
3. **REMOVE CONTROL RELAY FROM ACTUATOR BRACKET**
4. **REMOVE ABS ACTUATOR**

(a) Remove the 2 bolts, 2 nuts and ABS actuator assembly.
Torque: 19 N·m (195 kgf·cm, 14 ft·lbf)
(b) Remove the bolt and connector clamp.
(c) Remove the 3 nuts and ABS actuator from the actuator bracket.
Torque: 5.4 N·m (55 kgf·cm, 48 in.·lbf)
(d) Remove the 3 cushions and holders from the ABS actuator.

ABS ACTUATOR INSTALLATION

BR1AZ–01

Installation is in the reverse order of removal.
AFTER INSTALLATION, FILL BRAKE RESERVOIR WITH BRAKE FLUID, BLEED BRAKE SYSTEM (See page BR–5) AND CHECK FOR LEAKS

BR

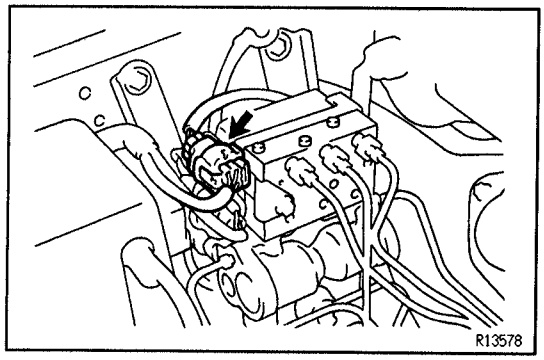

ABS ACTUATOR INSPECTION

BR1B0–01

1. **INSPECT BATTERY POSITIVE VOLTAGE**
   Battery positive voltage:
   10–14 V
2. **DISCONNECT CONNECTORS**

(a) Disconnect the connector from the actuator.
(b) Disconnect the 2 connectors from the control relay.

3. CONNECT ACTUATOR CHECKER (SST) TO ACTUATOR

(a) Connect the actuator checker (SST) to the actuator, control relay and body side wire harness through the sub–wire harness C (SST) and E (SST), as shown.
SST 09990–00150, 09990–00200, 09990–00210

(b) Connect the red cable of the checker to the battery positive (+) terminal and black cable to the negative (–) terminal. Connect the black cable of the sub–wire harness to the battery negative (–) terminal or body ground.

(c) Place "SHEET L" (SST) on the actuator checker.
SST 09990–00370

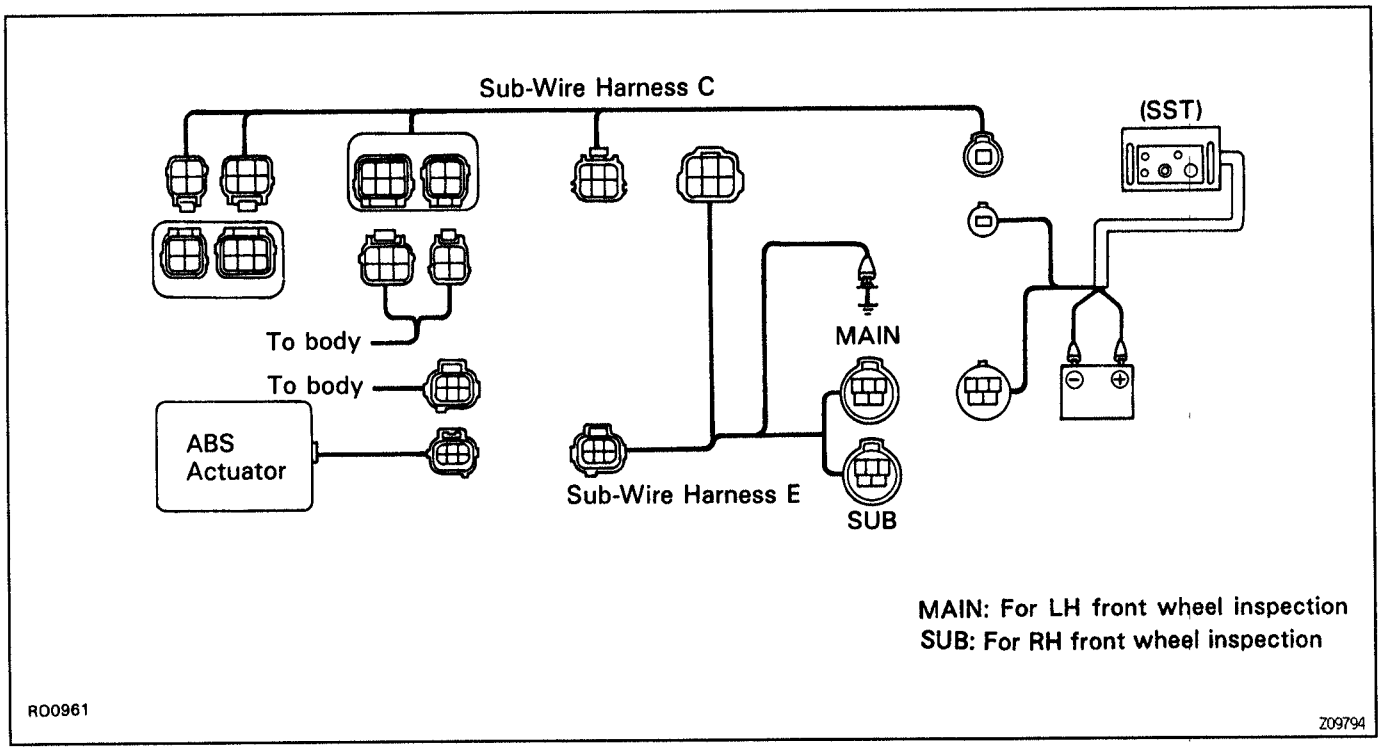

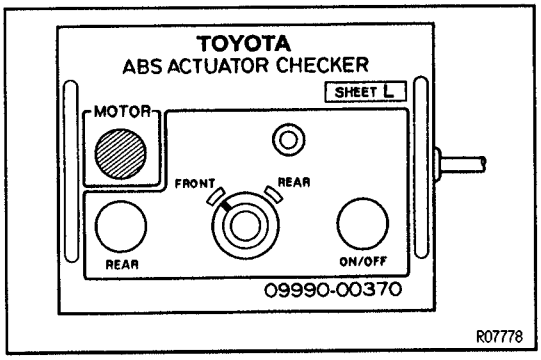

4. INSPECT BRAKE ACTUATOR OPERATION

(a) Start the engine, and run it at idle.

(b) Turn the selector switch of the actuator checker to "FRONT" position.

(c) Push and hold in the MOTOR switch for a few seconds.

(d) Depress the brake pedal and hold it until the step (g) is completed.

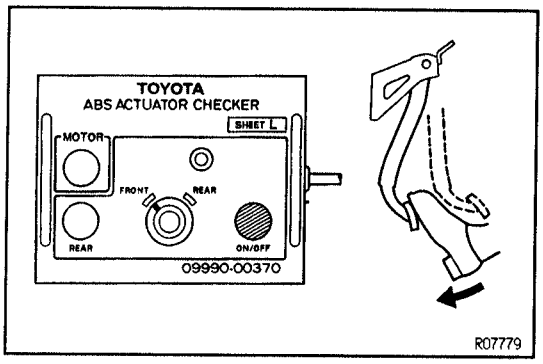

(e) Push the POWER switch, and check that the brake pedal does not go down.
NOTICE: Do not keep the POWER switch pushed down for more than 10 seconds.
(f) Release the switch, and check that the pedal goes down.

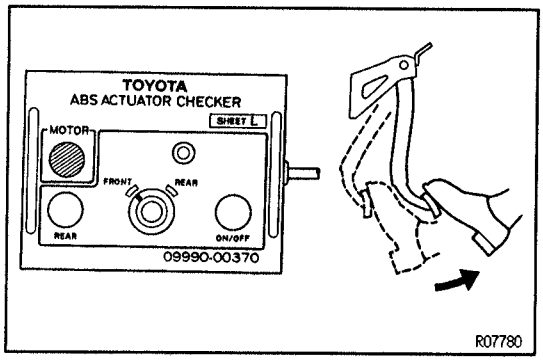

(g) Push and hold in the MOTOR switch for a few seconds, and check that the pedal returns.
(h) Release the brake pedal.

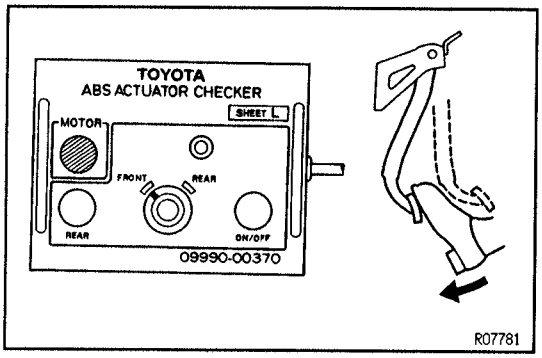

(i) Push and hold in the MOTOR switch for a few seconds.
(j) Depress the brake pedal and hold it for about 15 seconds. As you hold the pedal down, push the MOTOR switch for a few seconds. Check that the brake pedal does not pulsate.
(k) Release the brake pedal.

5. INSPECT FOR OTHER WHEELS

(a) Change the connection of the actuator checker(SST) to the sub–wire harness E(SST) – from the sub–wire harness MAIN connector to the SUB connector, or vice versa.
(b) Repeating (c) to (j) of the step 4, check the actuator operation same way.

BR

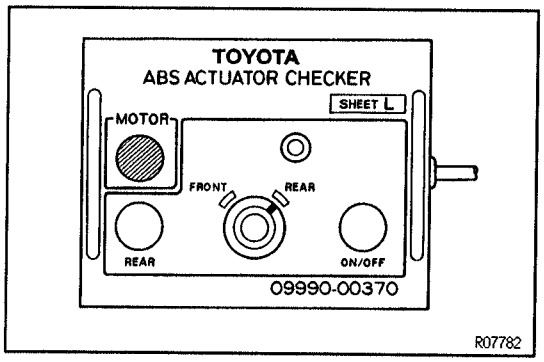

6. INSPECT FOR REAR WHEEL

(a) Turn the selector switch to the "REAR" position.
(b) Push and hold in the MOTOR switch for a few seconds.
(c) Depress the brake pedal and hold it until the step (g) is completed.

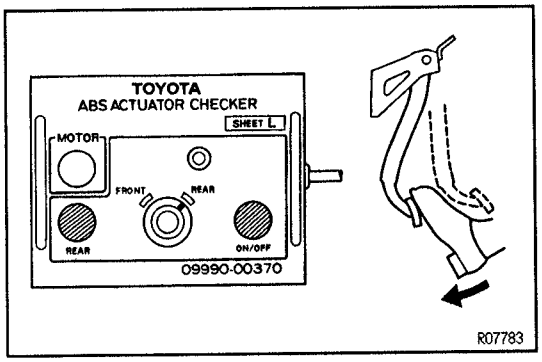

(d) Push the REAR switch while pressing the POWER switch, and check that the brake pedal cannot be depressed.
NOTICE: Do not keep the POWER switch pushed down for more than 10 seconds.

(e) Release the REAR switch then the POWER switch, and check that the brake pedal can be depressed.

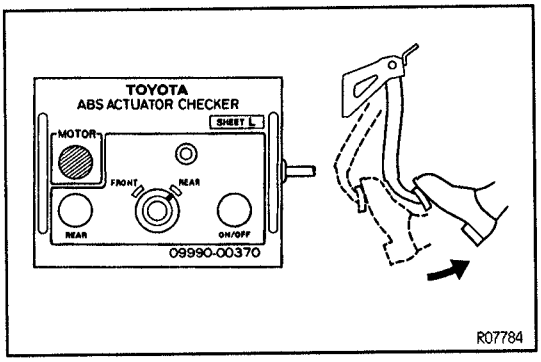

(f) Push and hold in the MOTOR switch for a few seconds, and check that the pedal returns.

(g) Release the brake pedal.

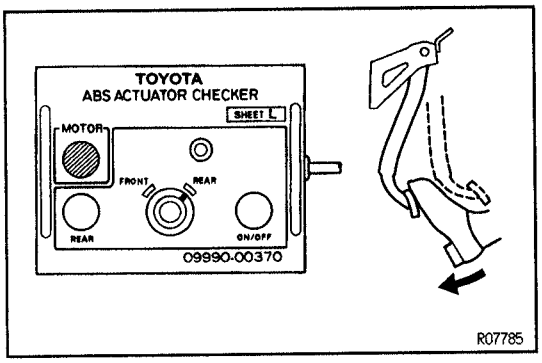

(h) Push and hold in the MOTOR switch for a few seconds.

(i) Depress the brake pedal and hold it for about 15 seconds. As you hold the pedal down, push the MOTOR switch for a few seconds. Check that the brake pedal does not pulsate.

(j) Release the brake pedal.

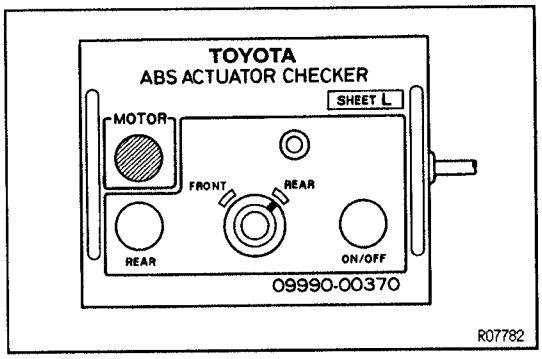

7. PUSH MOTOR SWITCH

(a) Push and hold in the MOTOR switch for a few seconds.

(b) Stop the engine.

8. DISCONNECT ACTUATOR CHECKER (SST) FROM ACTUATOR

Disconnect the actuator checker (SST) and sub–wire harness (SST) from the actuator, control relay and body side wire harness.

SST 09990–00150, 09990–00200, 09990–00210, 09990–00370

9. CONNECT CONNECTORS

(a) Connect the 2 connectors to the control relay.

(b) Connect the connector to the actuator.

10. CLEAR DTC

(See page BR–47)

FRONT SPEED SENSOR
COMPONENTS

BR03Z–11

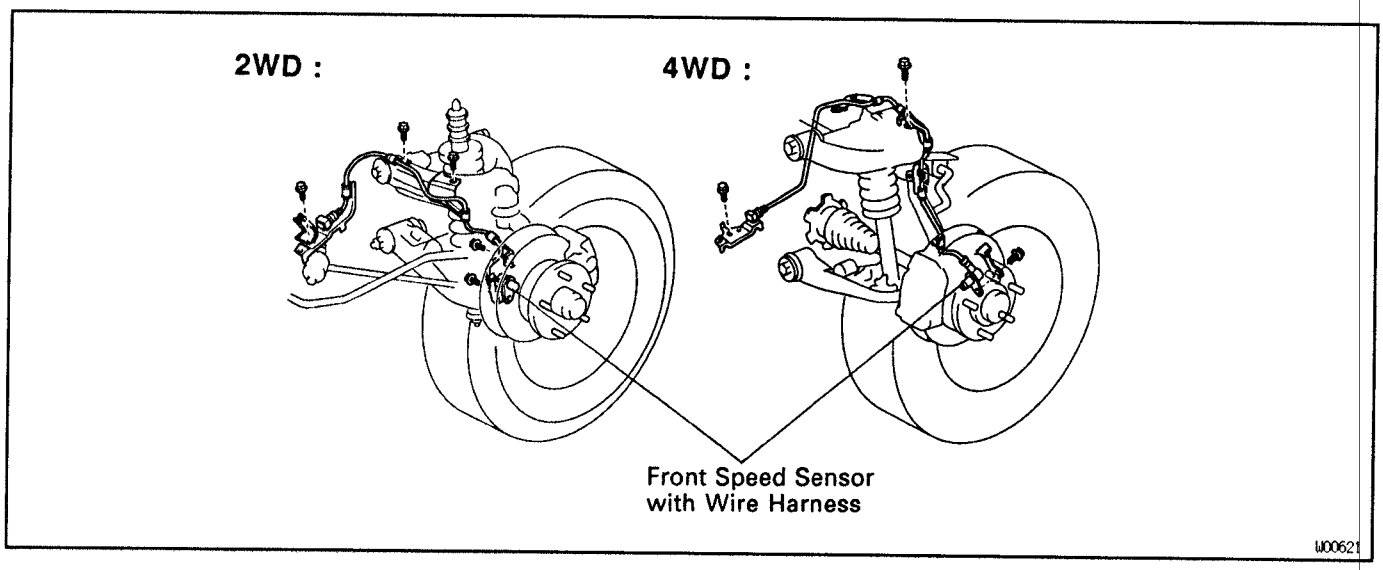

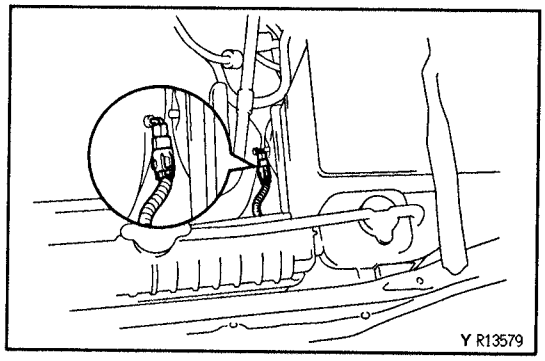

FRONT SPEED SENSOR REMOVAL

BR12F–02

1. REMOVE SPEED SENSOR

(a) Disconnect the speed sensor connector.

(b) Remove the 2 clamp bolts holding the sensor harness from the steering knuckle, upper arm and side rail.

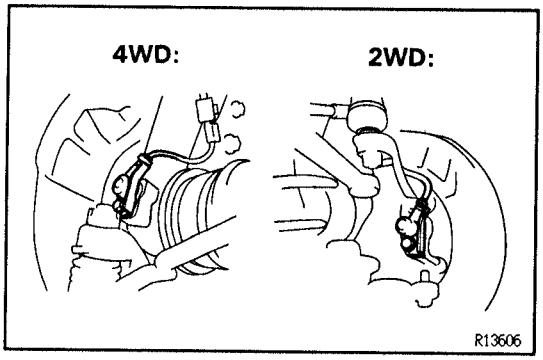

(c) Remove the speed sensor installation bolt from the steering knuckle.

Torque: 8 N·m (82 kgf·cm, 71 in.·lbf)

INSTALLATION NOTICE: Make sure that

- **There are no foreign objects on the sensor or the part of the knuckle to which the sensor is to be installed.**
- **The sensor is installed flat against the knuckle when you tighten the bolt.**
- **When installing the resin clips, use new ones.**

FRONT SPEED SENSOR INSTALLATION

BR181–02

Installation is in the reverse order of removal.

AFTER INSTALLATION, CHECK SPEED SENSOR SIGNAL (See page BR–51)

REAR SPEED SENSOR
COMPONENTS

BR034–12

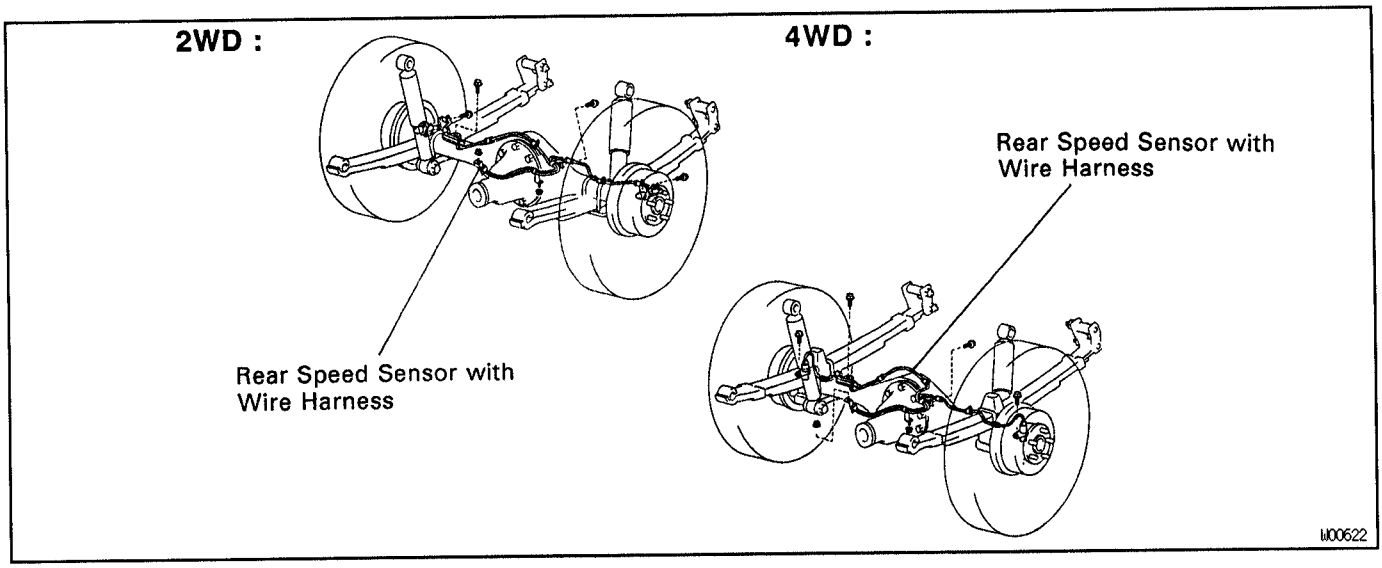

BR12G–02

REAR SPEED SENSOR REMOVAL

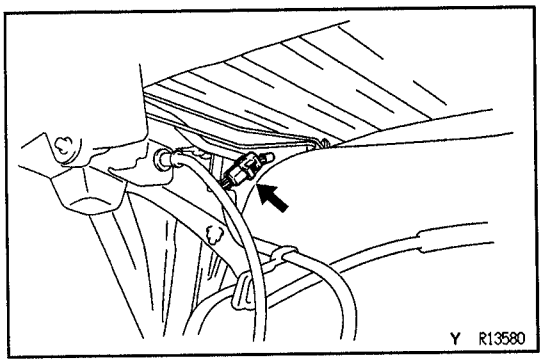

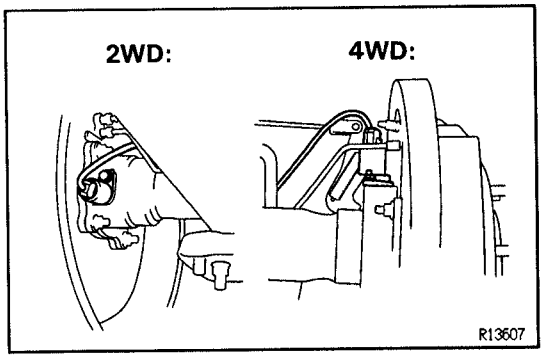

1. REMOVE SPEED SENSOR

(a) Disconnect the speed sensor connector, and pull out the sensor wire harness with grommet.

(b) Remove the 5 resin clips, 2 clamp set bolts and 2 nuts holding the sensor wire harness from the side rail, fuel tank and axle housing.

(c) Remove the 2 mounting bolts and speed sensor.

Torque: 8 N·m (82 kgf·cm, 71 in.·lbf)

INSTALLATION NOTICE: Make sure that

- **There are no foreign objects on the sensor or the part of the axle end to which the sensor is to be installed.**
- **The sensor is installed flat against the axle end when you tighten the bolt.**
- **When installing the resin clips, use new ones.**

BR

BR182–01

REAR SPEED SENSOR INSTALLATION

Installation is in the reverse order of removal.
AFTER INSTALLATION, CHECK SPEED SENSOR SIGNAL (See page BR–51)

– MEMO –

TROUBLESHOOTING

HOW TO PROCEED WITH TROUBLESHOOTING ..... BR – 44
CUSTOMER PROBLEM ANALYSIS CHECK SHEET ..... BR – 45
DIAGNOSIS SYSTEM ..... BR – 46
DTC CHART ..... BR – 48
PARTS LOCATION ..... BR – 49
STANDARD VALUE OF ECU TERMINALS ..... BR – 50
SPEED SENSOR SIGNAL AND DECELERATION SENSOR CHECK ..... BR – 51
PROBLEM SYMPTOMS CHART ..... BR – 54
CIRCUIT INSPECTION
- DTC 11, 12 ABS Control (Solenoid) Relay Circuit ..... BR – 55
- DTC 13, 14 ABS Control (Motor) Relay Circuit ..... BR – 58
- DTC 21, 22, 23 ABS Actuator Solenoid Circuit ..... BR – 61
- DTC 31, 32, 33, 34, 35, 36 Speed Sensor Circuit ..... BR – 63
- DTC 37 Neither Front Speed Sensor Rotor Missing ..... BR – 67
- DTC 37 Tires of Different Size (2WD vehicles) ..... BR – 67
- DTC 41 IG Power Source Circuit ..... BR – 68
- DTC 43 Malfunction in Deceleration Sensor ..... BR – 70
- DTC 44 Deceleration Sensor Circuit ..... BR – 71
- DTC 48 Rear Differential Lock Circuit ..... BR – 72
- DTC 51 ABS Pump Motor Lock ..... BR – 74
- Stop Light Switch Circuit ..... BR – 75
- ABS Warning Light Circuit ..... BR – 77
- Tc Terminal Circuit ..... BR – 79
- Ts Terminal Circuit ..... BR – 80
- Check for Fluid Leakage ..... BR – 81

HOW TO PROCEED WITH TROUBLESHOOTING

Troubleshoot in accordance with the procedure on the following pages.

Items inside ▱ are titles of pages in this manual, with the page number in the bottom portion. See the pages for detailed explanations.

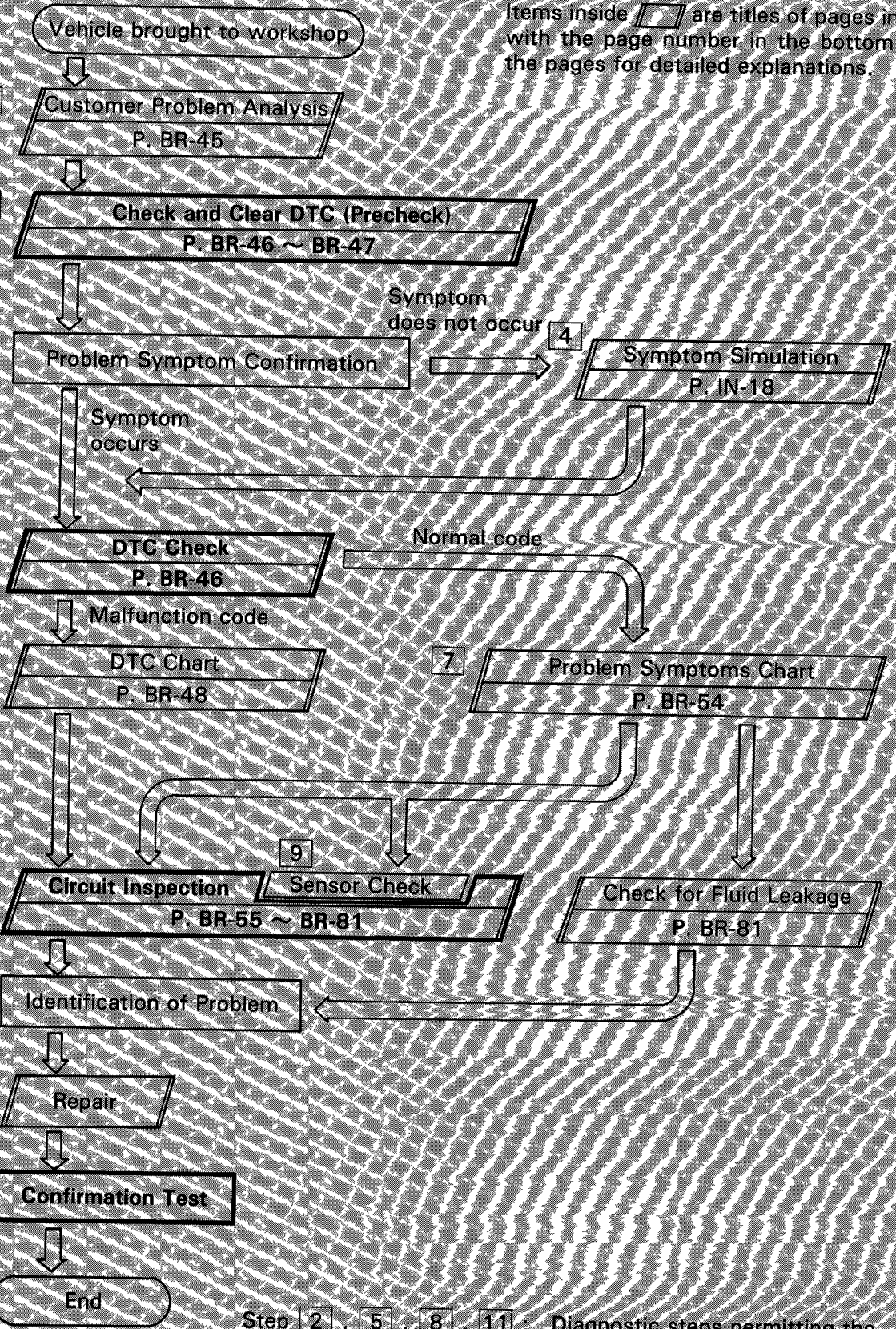

Step 2 , 5 , 8 , 11 : Diagnostic steps permitting the use of the TOYOTA hand-held tester or TOYOTA break-out-box.

BR

CUSTOMER PROBLEM ANALYSIS CHECK SHEET

ABS Check Sheet

Inspector's Name :

Customer's Name		**Registration No.**	
		Registration Year	/ /
		Frame No.	
Date Vehicle Brought In	/ /	**Odometer Reading**	km miles

Date Problem First Occurred	/ /
Frequency Problem Occurs	□ Continuous □ Intermittent (times a day)

Symptoms	□ ABS does not operate.	
	□ ABS does not operate efficiently.	
	ABS Warning Light Abnormal	□ Remains ON □ Does not Light Up

DTC Check	**1st Time**	□ Normal Code □ Malfunction Code (Code)
	2nd Time	□ Normal Code □ Malfunction Code (Code)

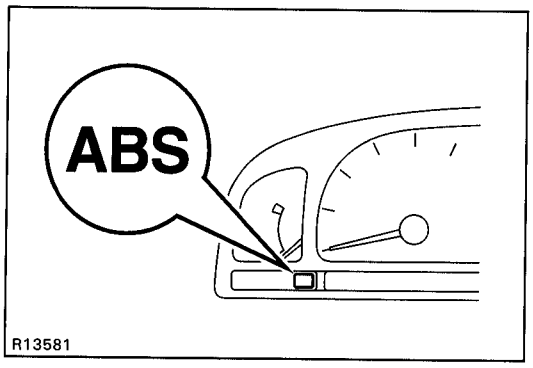

DIAGNOSIS SYSTEM

INDICATOR CHECK

When the ignition switch is turned ON, check that the ABS warning light goes on for 3 seconds.

HINT: If the indicator check result is not normal, proceed to troubleshooting for the ABS warning light circuit (See page BR-77).

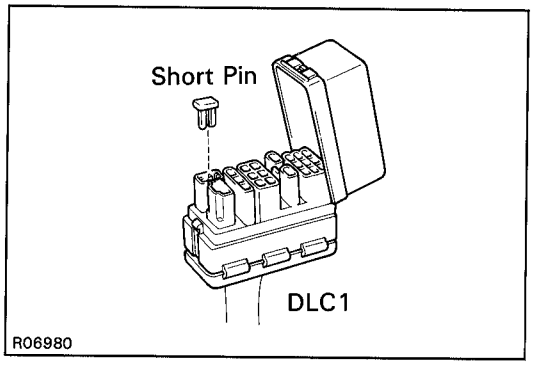

DTC CHECK

1. Turn the ignition switch ON.
2. Disconnect the Short Pin from DLC1.

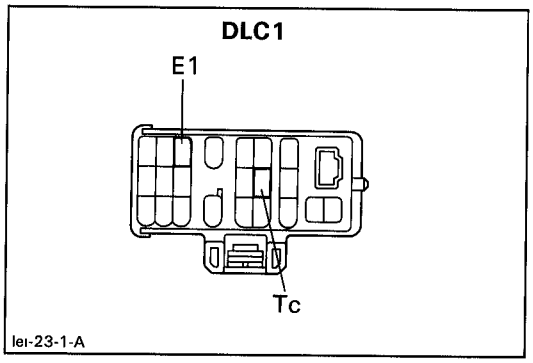

3. Using SST, connect terminals Tc and E1 of DLC1.
   SST 09843 – 18020
4. Read the DTC from the ABS warning light on the combination meter.

   HINT: If no code appears, inspect the diagnostic circuit or ABS warning light circuit (See page BR-79 or BR-77).

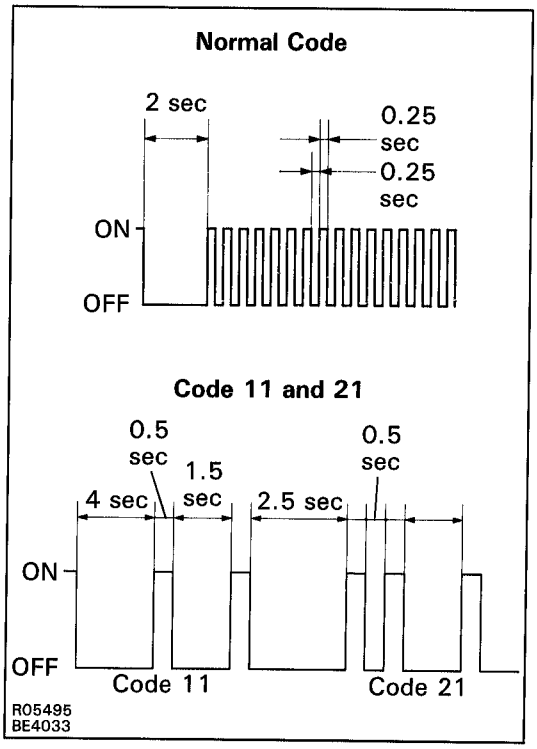

   As an example, the blinking patterns for normal code and codes 11 and 21 are shown on the left.
5. Codes are explained in the code table on page BR-48.
6. After completing the check, disconnect terminals Tc and E1, and turn off the display.

   If 2 or more malfunctions are indicated at the same time, the lowest numbered DTC will be displayed first.

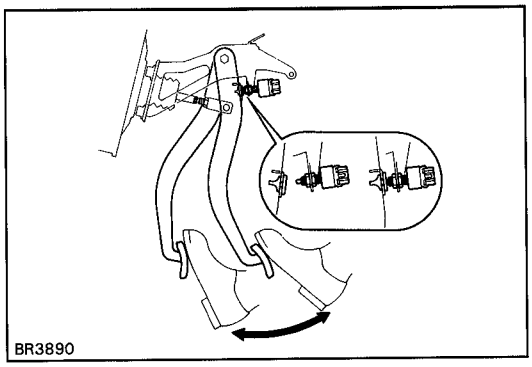

DTC CLEARANCE

1. Using SST, connect terminals Tc and E1 of DLC1.
   SST 09843 – 18020
2. IG switch ON.
3. Clear the DTC stored in ECU by depressing the brake pedal 8 or more times within 3 seconds.
4. Check that the warning light shows the normal code.
5. Remove the SST from the terminals of DLC1.
6. Connect the Short Pin to DLC1.
   HINT: Cancellation can also be done by removing the ECU-B fuse, but in this case, other memory systems will also be cancelled out.

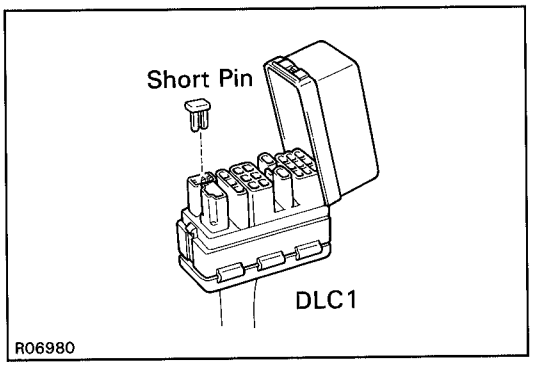

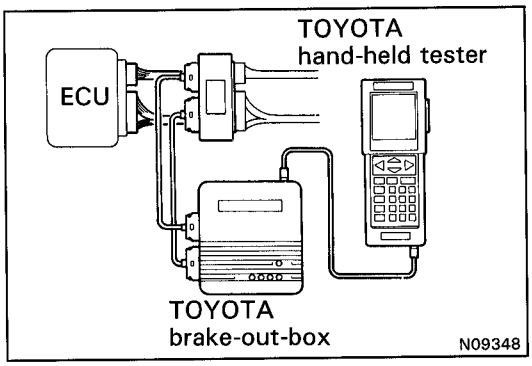

ECU TERMINAL VALUES MEASUREMENT USING TOYOTA BREAK-OUT-BOX AND TOYOTA HAND-HELD TESTER

1. Hook up the TOYOTA hand-held tester and TOYOTA break-out-box to the vehicle.
2. Read the ECU input/output values by following the prompts on the tester screen.
   HINT: TOYOTA hand-held tester has a "Snapshot" function.
   This records the measured values and is effective in the diagnosis of intermittent problems.
   Please refer to the TOYOTA hand-held tester/TOYOTA break-out-box operators manual for further details.

DTC CHART

If a malfunction code is displayed during the DTC check, check the circuit listed for that code in the table below and proceed to the relevant page.

HINT: Using SST 09843 – 18020, connect the terminals Tc and E_1, and remove the short pin.

DTC No. (See page)	Detection Item	Trouble Area
11 (BR-55)	Open circuit in ABS control (solenoid) relay circuit	• ABS control (solenoid) relay • Open or short in ABS control (solenoid) relay circuit • ECU
12 (BR-55)	Short circuit in ABS control (solenoid) relay circuit	• ABS control (solenoid) relay • B+ short in ABS control (solenoid) relay circuit • ECU
13 (BR-58)	Open circuit in ABS control (motor) relay circuit	• ABS control (motor) relay • Open or short in ABS control (motor) relay circuit • ECU
14 (BR-58)	Short circuit in ABS control (motor) relay circuit	• ABS control (motor) relay • B+ short in ABS control (motor) relay circuit • ECU
21 (BR-61)	Open or short circuit in 2-position solenoid circuit for right front wheel	• ABS actuator • Open or short in SFRR or SFRH circuit • ECU
22 (BR-61)	Open or short circuit in 2-position solenoid circuit for left front wheel	• ABS actuator • Open or short in SFLR or SFLH circuit • ECU
23 (BR-61)	Open or short circuit in 2-position solenoid circuit for rear wheel	• ABS actuator • Open or short in SRR or SRH circuit • ECU
31 (BR-63)	Right front wheel speed sensor signal malfunction	• Right front, left front, right rear and left rear speed sensor • Open or short in each speed sensor circuit • ECU
32 (BR-63)	Left front wheel speed sensor signal malfunction	
33 (BR-63)	Right rear wheel speed sensor signal malfunction	
34 (BR-63)	Left rear wheel speed sensor signal malfunction	
35 (BR-63)	Open circuit in left front or right rear speed sensor circuit	• Open in left front or right rear speed sensor circuit • ECU
36 (BR-63)	Open circuit in right front or left rear speed sensor circuit	• Open in right front or left rear speed sensor circuit • ECU
37 (BR-67)	Neither front speed sensor rotor missing	• Front axle hub • Right front, left front speed sensor • Wire harness for sensor system • ECU
*1 37 (BR-67)	Some tire is different size from the other tires	• Tire size • ECU
41 (BR-68)	Low battery positive voltage or abnormally high battery positive voltage	• Battery • IC regulator • Open or short in power source circuit • ECU
*2 43 (BR-70)	Malfunction in deceleration sensor	• Deceleration sensor • Wire harness for deceleration sensor system • ECU
*2 44 (BR-71)	Open or short in deceleration sensor circuit	• Deceleration sensor • Open or short in deceleration sensor circuit • ECU
*3 48 (BR-72)	Open or short circuit in rear differential lock circuit Rear differential is locking	• Rear differential lock • ECU
51 (BR-74)	Pump motor is locked Open in pump motor ground	• ABS pump motor
Always ON	Malfunction in ECU	• ECU

*1: 2WD models
*2: 4WD models
*3: w/ Rear differential lock

PARTS LOCATION

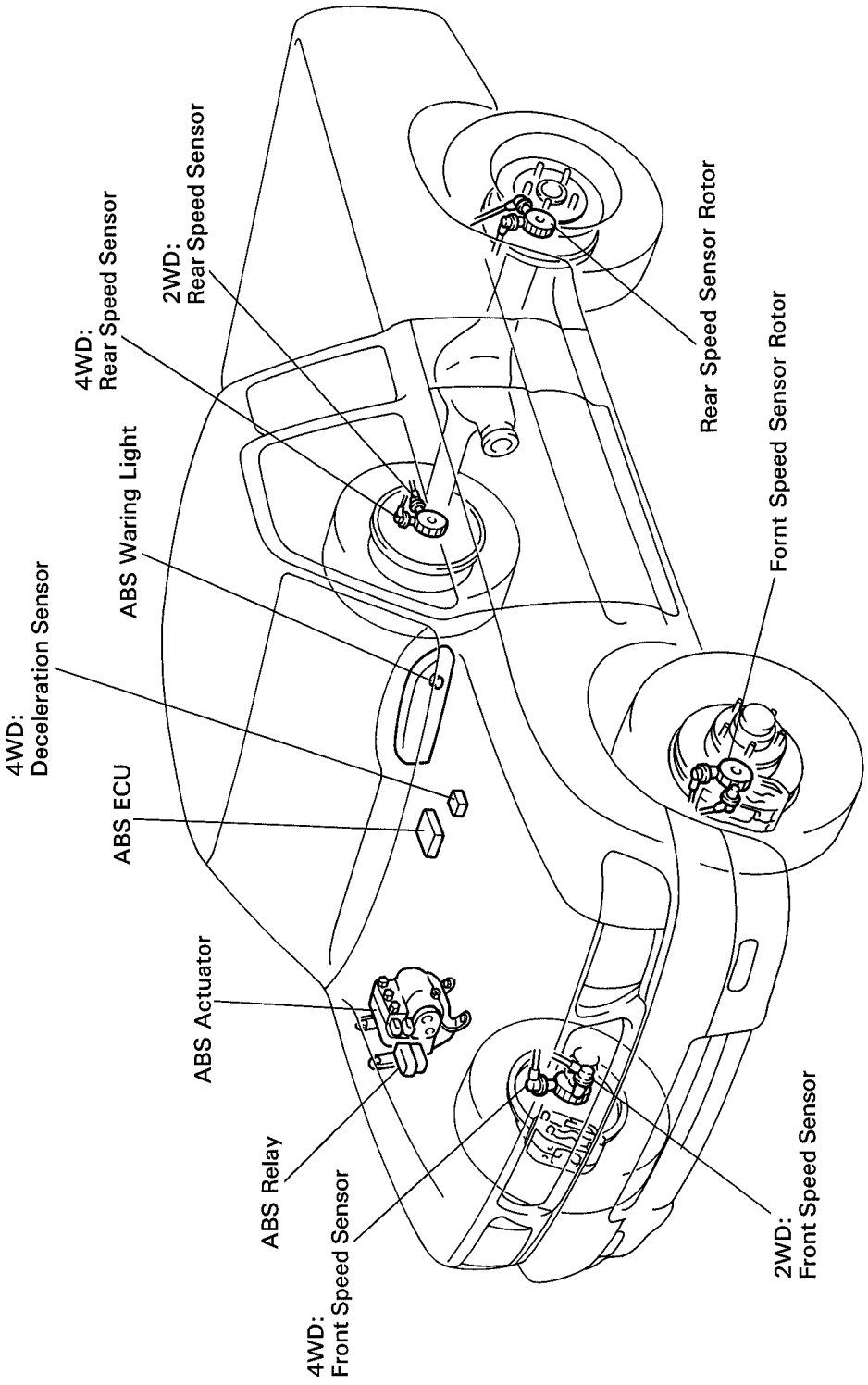

R13636

BR

STANDARD VALUE OF ECU TERMINALS

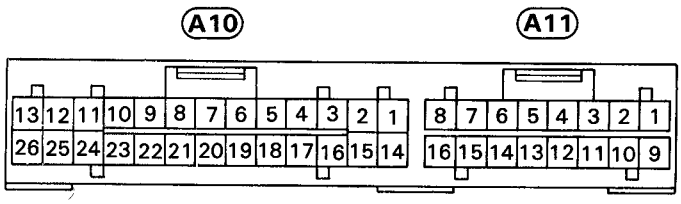

R00463

Symbols (Terminals No.)			STD Voltage (V)	Condition
BAT (A10-22)	–	GND ($A10-\frac{11}{24}$)	10 – 14	Always
IG1 (A10-10)	–	GND ($A10-\frac{11}{24}$)	10 – 14	IG switch ON
SR (A11-5)	–	R– (A11-15)	9 – 14	IG switch ON, ABS warning light OFF
MR (A11-4)	–	R– (A11-15)	Below 1.0	IG switch ON
SFRH (A11-1)	–	GND ($A10-\frac{11}{24}$)	10 – 14	IG switch ON, ABS warning light OFF
SFRR (A11-2)	–	GND ($A10-\frac{11}{24}$)	10 – 14	IG switch ON, ABS warning light OFF
SFLH (A10-13)	–	GND ($A10-\frac{11}{24}$)	10 – 14	IG switch ON, ABS warning light OFF
SFLR (A10-12)	–	GND ($A10-\frac{11}{24}$)	10 – 14	IG switch ON, ABS warning light OFF
SRR (A10-25)	–	GND ($A10-\frac{11}{24}$)	10 – 14	IG switch ON, ABS warning light OFF
SRH (A10-26)	–	GND ($A10-\frac{11}{24}$)	10 – 14	IG switch ON, ABS warning light OFF
AST (A11-11)	–	GND ($A10-\frac{11}{24}$)	10 – 14	IG switch ON, ABS warning light OFF
WA (A11-12)	–	GND ($A10-\frac{11}{24}$)	Below 2.0	IG switch ON, ABS warning light ON
			10 – 14	IG switch ON, ABS warning light OFF
PKB (A10-9)	–	GND ($A10-\frac{11}{24}$)	Below 1.5	IG switch ON, PKB switch ON
			10 – 14	IG switch ON, PKB switch OFF
STP (A10-21)	–	GND ($A10-\frac{11}{24}$)	Below 1.5	Stop light switch OFF
			8 – 14	Stop light switch ON
Tc (A10-20)	–	GND ($A10-\frac{11}{24}$)	10 – 14	IG switch ON
Ts (A10-6)	–	GND ($A10-\frac{11}{24}$)	10 – 14	IG switch ON
FR+ (A11-7)	–	FR– (A11-6)	AC generation	IG switch ON Slowly turn right front wheel
FL+ (A11-14)		FL– (A11-13)	AC generation	IG switch ON Slowly turn left front wheel
RR+ (A10-15)	–	RR– (A10-16)	AC generation	IG switch ON Slowly turn right rear wheel
RL+ (A10-1)		RL– (A10-2)	AC generation	IG switch ON Slowly turn left rear wheel
GS1 (A10-19)	–	GND ($A10-\frac{11}{24}$)	4 – 6 or 7 – 11	IG switch ON
GS2 (A10-7)	–	GND ($A10-\frac{11}{24}$)	4 – 6	IG switch ON

BR

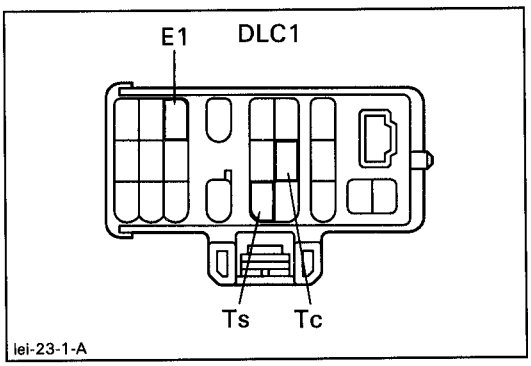

SPEED SENSOR SIGNAL AND DECELERATION SENSOR CHECK

SPEED SENSOR SIGNAL CHECK

1. Turn the ignition switch OFF.
2. Using SST, connect terminals Ts and E1 of DLC1.
   SST 09843−18020
3. Start the engine.

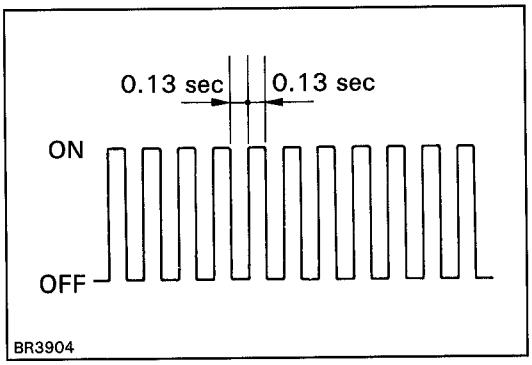

4. Check that the ABS warning light blinks.
   HINT: If the ABS warning light does not blink, inspect the ABS warning light circuit (See page BR-77).
5. Drive vehicle straight forward.
   HINT: Drive vehicle faster than 45 km/h (28 mph) for several seconds.
6. Stop the vehicle.
7. Using SST, connect terminals Tc and E1 of DLC1.
   SST 09843−18020
8. Read the number of blinks of the ABS warning light.
   HINT: See the list of DTC shown on the next page.
   If every sensor is normal, a normal code is output (A cycle of 0.25 sec. ON and 0.25 sec. OFF is repeated).
   If 2 or more malfunctions are indicated at the same time, the lowest numbered code will be displayed 1st.

BR

Malfunction Code (Example Code 72, 76)

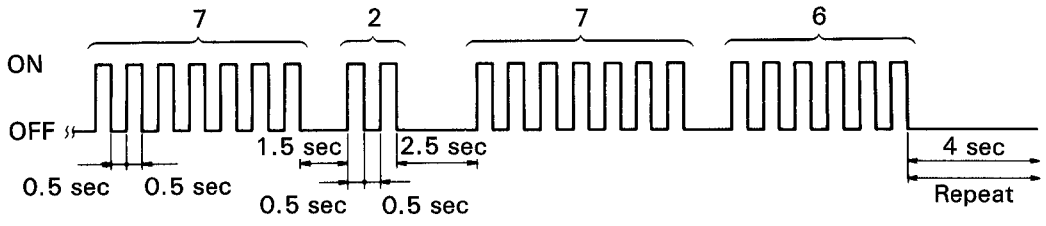

9. After doing the check, disconnect terminals Ts and E1, Tc and E1 of DLC1, and ignition switch turned OFF.

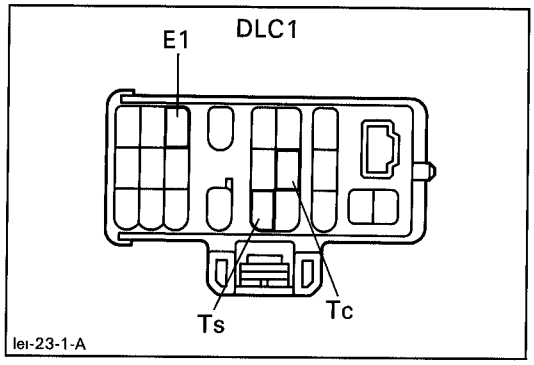

DECELERATION SENSOR DETECTION POINT CHECK

1. Turn the ignition switch OFF.
2. Using SST, connect terminals Ts and E1 of DLC1.
   SST 09843−18020
3. Start the engine.

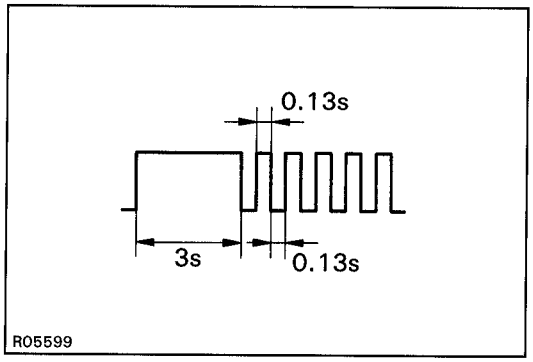

4. Check that the ABS warning light blinks.
   HINT: If the ABS warning light does not blink, inspect the ABS warning light circuit (See page BR-77).

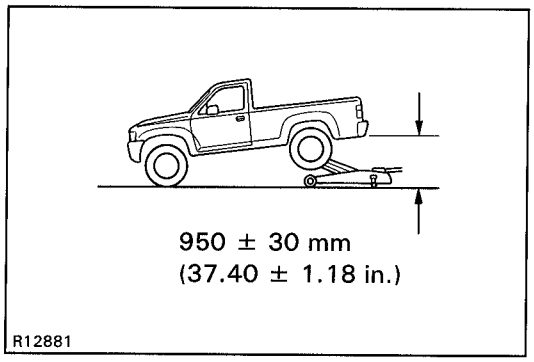

5. Jack up the rear side of the vehicle slowly.
   HINT: When measuring the height, measure at the center of the lower body of the vehicle.
6. Check that the warning light blinks.
   If the warning light turns on, inspect the deceleration sensor installation. If the sensor installation is OK, replace the deceleration sensor.
7. Jack down the vehicle slowly.

BR

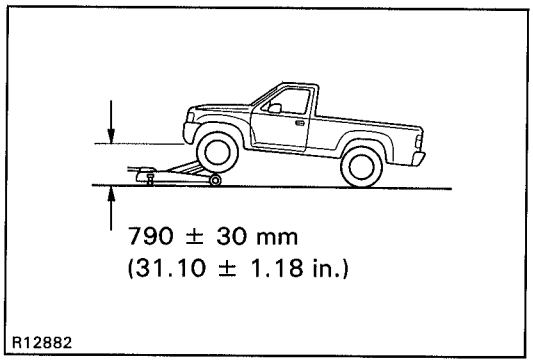

8. Jack up the front side of the vehicle slowly, as shown.
   HINT: When measuring the height, measure at the center of the lower body of the vehicle.
9. Check that the warning light blinks.
   If the warning light turns on, inspect the deceleration sensor installation. If the sensor installation is OK, replace the deceleration sensor.
10. Jack down the vehicle slowly.

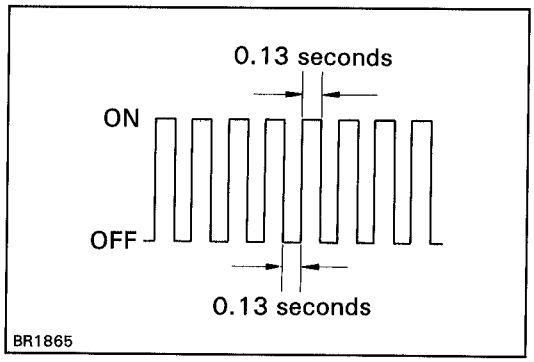

DECELERATION SENSOR OPERATION CHECK

1. Drive the vehicle straight ahead at about 20 km/h (12.4 mph) or more, lightly depress the brake pedal.
2. Check that there is no change in the warning light pattern.

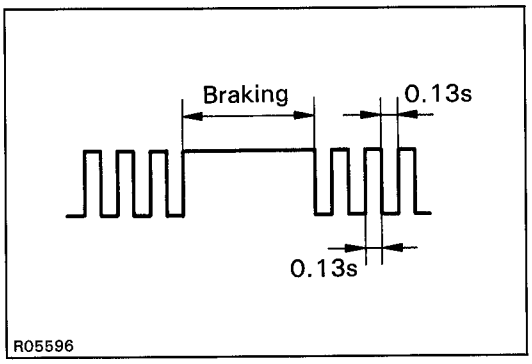

3. Drive the vehicle straight ahead at about 20 km/h (12.4 mph) or more, and depress the brake pedal moderately.
4. Check that the warning light turns on while braking.

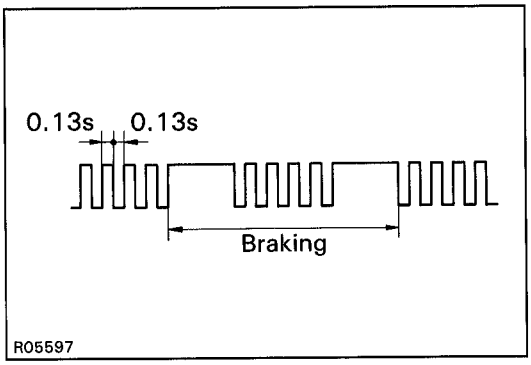

5. Drive the vehicle straight ahead at about 20 km/h (12.4 mph) or more, and depress the brake pedal strongly.
6. Check that the warning light pattern changes while braking, as shown.
   If the operation is not as specified, inspect the deceleration sensor installation. If the sensor installation is OK, replace the deceleration sensor.
7. Stop the vehicle and turn the ignition switch OFF.
8. Remove SST from the terminals Ts and E_1 of the DLC 1.
   SST 09843 – 18020

DTC of Speed Sensor Check Function

Code No.	Diagnosis	Trouble Area
71	Low output voltage of right front speed sensor	• Right front speed sensor • Sensor installation
72	Low output voltage of left front speed sensor	• Left front speed sensor • Sensor installation
73	Low output voltage of right rear speed sensor	• Right rear speed sensor • Sensor installation
74	Low output voltage of left rear speed sensor	• Left rear speed sensor • Sensor installation
75	Abnormal change in output voltage of right front speed sensor	• Right front speed sensor rotor
76	Abnormal change in output voltage of left front speed sensor	• Left front speed sensor rotor
77	Abnormal change in output voltage of right rear speed sensor	• Right rear speed sensor rotor
78	Abnormal change in output voltage of left rear speed sensor	• Left rear speed sensor rotor
*79	Deceleration sensor is faulty	• Deceleration sensor • Sensor installation

*: 4WD models

PROBLEM SYMPTOMS CHART

If a normal code is displayed during the DTC check but the problem still occurs, check the circuits for each problem symptom in the order given in the table below and proceed to the relevant troubleshooting page.

Symptoms	Inspection Circuit	See page
ABS does not operate.	Only when 1. ~ 4. are all normal and the problem is still occuring, replace the ABS ECU. 1. Check the DTC reconfirming that the normal code is output. 2. IG power source circuit. 3. Speed sensor circuit. 4. Check the ABS actuator with a checker. If abnormal, check the hydraulic circuit for leakage (See page BR-81).	**BR-46** **BR-68** **BR-63** **BR-36**
ABS does not operate efficiently	Only when 1. ~ 4. are all normal and the problem is still occuring, replace the ABS ECU. 1. Check the DTC reconfirming that the normal code is output. 2. Speed sensor circuit. 3. Stop light switch circuit. 4. Check the ABS actuator with a checker. If abnormal, check the hydraulic circuit for leakage (See page BR-81).	**BR-46** **BR-63** **BR-75** **BR-36**
ABS warning light abnormal.	1. ABS warning light circuit. 2. ABS ECU.	**BR-77**
DTC check cannot be done	Only when 1. and 2. are all normal and the problem is still occuring, replace the ABS ECU. 1. ABS warning light circuit. 2. Tc terminal circuit.	**BR-77** **BR-79**
Speed sensor signal check cannot be done	1. Ts terminal circuit. 2. ABS ECU.	**BR-80**

CIRCUIT INSPECTION

DTC 11, 12 ABS Control (Solenoid) Relay Circuit

CIRCUIT DESCRIPTION

This relay supplies power to each ABS solenoid. After the ignition switch is turned ON, if the initial check is OK, the relay goes on.

DTC No.	DTC Detecting Condition	Trouble Area
11	Conditions (1) and (2) continue for 0.2 sec. or more: (1) ABS control (solenoid) relay terminal (SR) voltage: Battery positive voltage (2) ABS control (solenoid) relay monitor terminal (AST) voltage: 0 V	• ABS control (solenoid) relay • Open or short in ABS control (solenoid) relay circuit • ECU
12	Conditions (1) and (2) continue for 0.2 sec. or more: (1) ABS control (solenoid) relay terminal (SR) voltage: 0 V (2) ABS control (solenoid) relay monitor terminal (AST) voltage: Battery positive voltage	• ABS control (solenoid) relay • B+ short in ABS control (solenoid) relay circuit • ECU

Fail safe function: If trouble occurs in the ABS control (solenoid) relay circuit, the ECU cuts off current to the ABS control (solenoid) relay and prohibits ABS control.

WIRING DIAGRAM

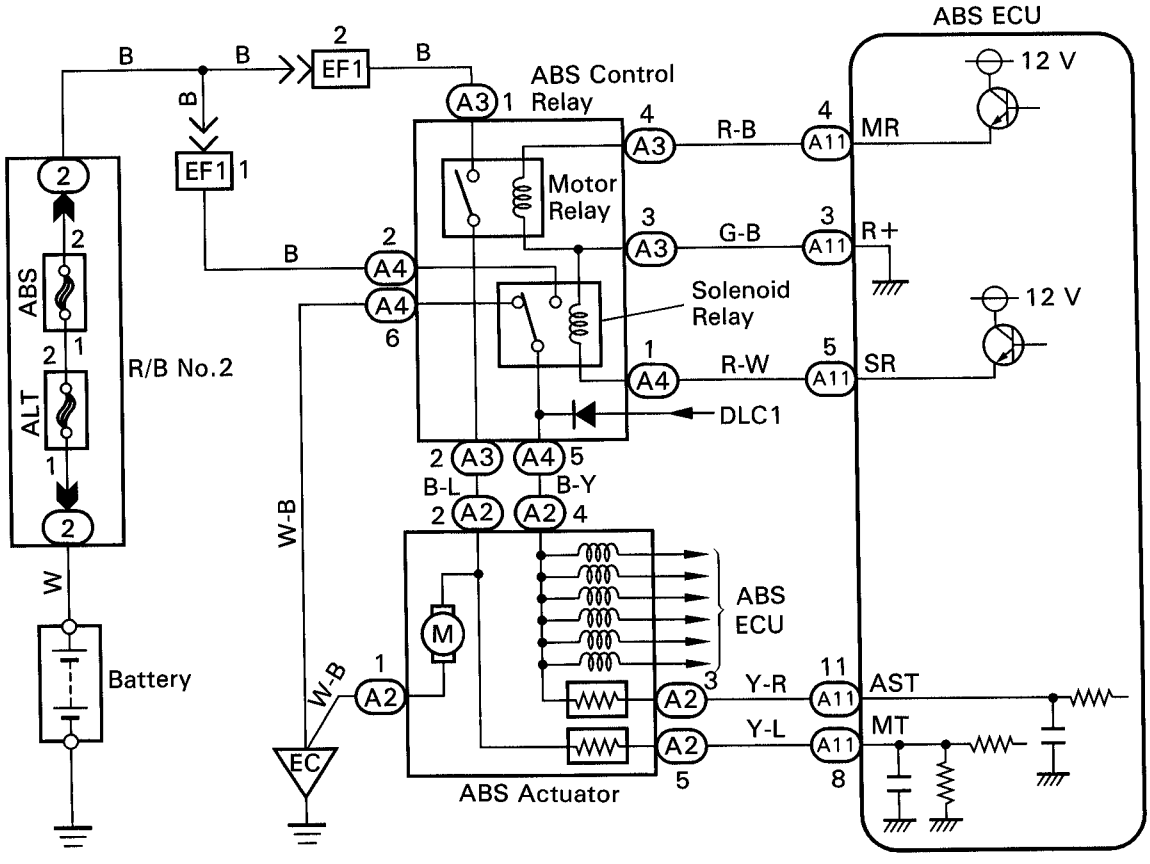

BR

INSPECTION PROCEDURE

1 **Check voltage between terminals (A4) 2 and (A4) 6 of ABS control (solenoid) relay connector.**

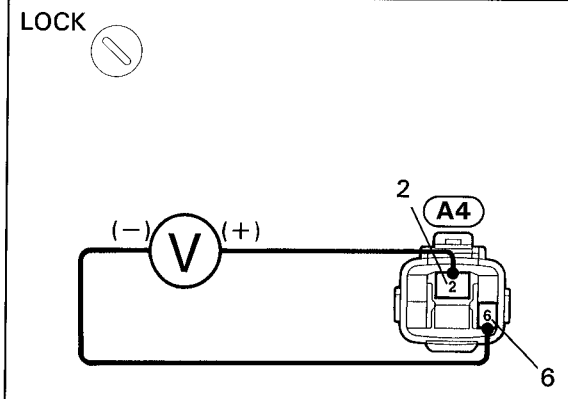

BE6653
R14203

P Disconnect the ABS control relay connector.

C Measure the voltage between terminals (A4) 2 and (A4) 6 of ABS control relay harness side connector.

OK **Voltage: 10 – 14 V**

OK

NG > **Check and repair harness or connector.**

2 **Check continuity between terminals (A4) 5 and (A2) 4, (A2) 4 and (A2) 3, (A2) 3 and (A11) 11.**

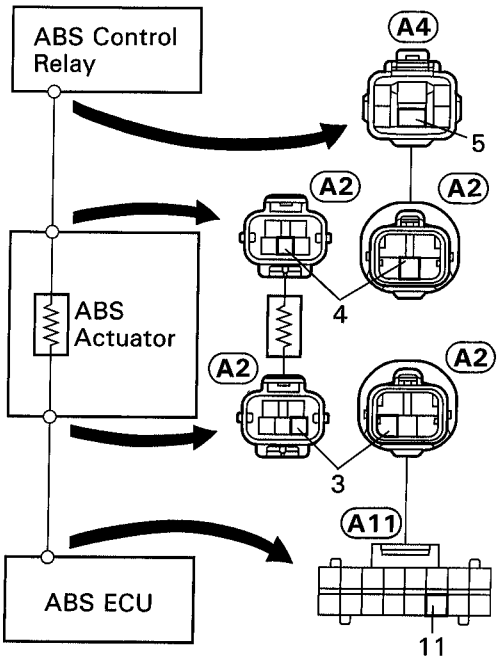

R13727

P Disconnect the 2 connectors from ABS actuator.

C Check continuity between terminals (A4) 5 and (A2) 4, (A2) 4 and (A2) 3, (A2) 3 and (A11) 11.

OK **Continuity**

HINT: There is a resistance of 26 ~ 40 Ω between terminals (A2) 4 and (A2) 3.

OK

NG > **Repair or replace harness or ABS actuator.**

BR

3 Check ABS control (solenoid) relay.

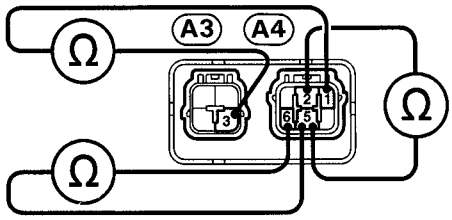

C Check continuity between each terminal of ABS control (solenoid) relay.

OK

Tarminals (A4) 1 and (A3) 3	Continuity (Reference value 80 Ω)
Terminals (A4) 5 and (A4) 6	Continuity
Terminals (A4) 2 and (A4) 5	Open

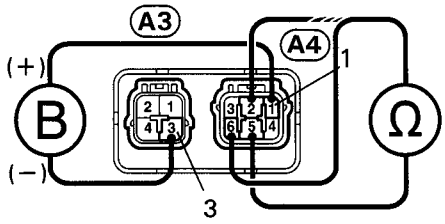

C
1. Apply battery voltage between terminals (A4) 1 and (A3) 3.
2. Check continuity between each terminal of ABS control (solenoid) relay.

OK

Terminals (A4) 5 and (A4) 6	Open
Terminals (A4) 2 and (A4) 5	Continuity

R14139
R14140

OK ⟩ **NG** ⟩ **Replace ABS control relay.**

4 Check for open and short in harness and connector between ABS control relay and ABS ECU (See page IN-24).

OK ⟩ **NG** ⟩ **Repair or replace harness or connector.**

If the same code is still output after the DTC is deleted, check the contact condition of each connection.
If the connections are normal, the ECU may be defective.

BR

DTC 13, 14 ABS Control (Motor) Relay Circuit

CIRCUIT DESCRIPTION

The ABS control (motor) relay supplies power to the ABS pump motor. While the ABS is activated, the ECU switches the control (motor) relay ON and operates the ABS pump motor.

DTC No.	DTC Detecting Condition	Trouble Area
13	Conditions (1) and (2) continued for 0.2 sec. or more: (1) ABS control (motor) relay terminal (MR) voltage: Battery positive voltage (2) ABS control (motor) relay monitor terminal (MT) voltage: 0 V	• ABS control (motor) relay • Open or short in ABS control (motor) relay circuit • ECU
14	Conditions (1) and (2) continued for 2.5 sec. or more: (1) ABS control (motor) relay terminal (MR) voltage: 0 V (2) ABS control (motor) relay monitor terminal (MT) voltage: Battery positive voltage	• ABS control (motor) relay • B+ short in ABS control (motor) relay circuit • ECU

Fail safe function: If trouble occurs in the ABS control (motor) relay circuit, the ECU cuts off current to the ABS control (solenoid) relay and prohibits ABS control.

WIRING DIAGRAM

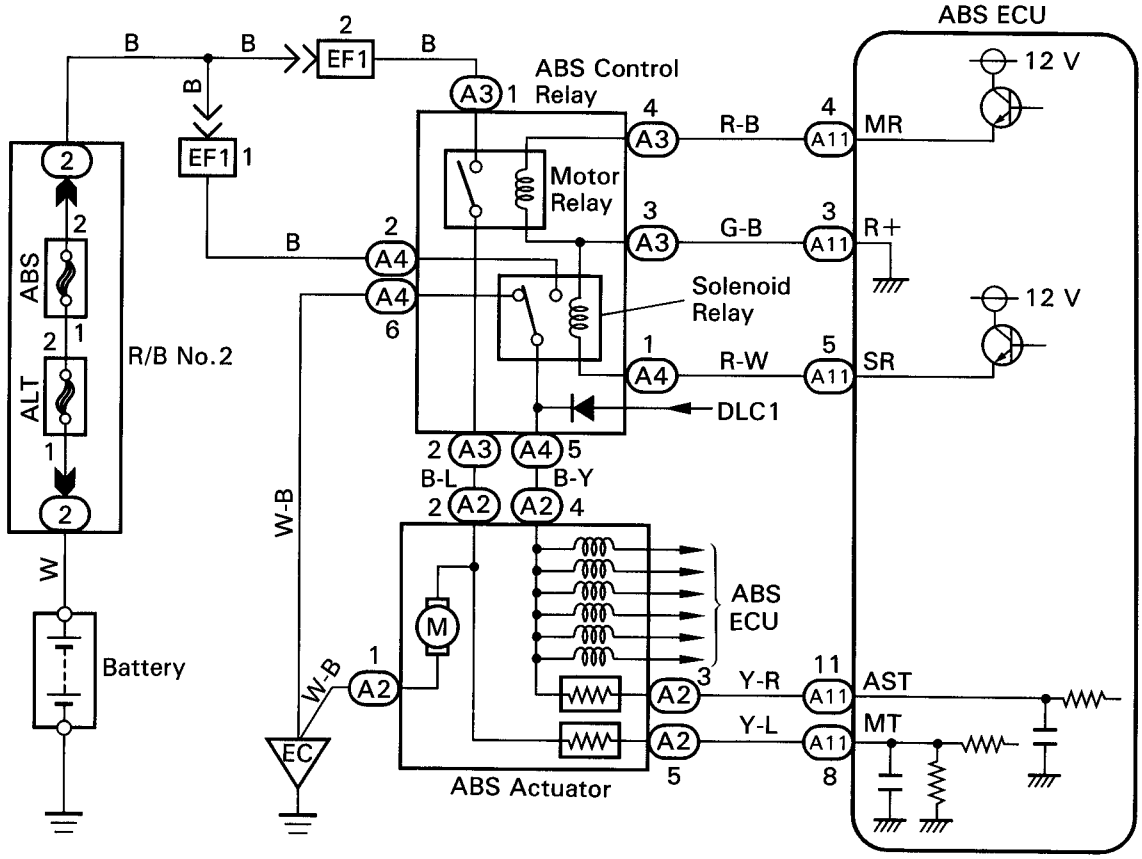

R13718

INSPECTION PROCEDURE

1 **Check voltage between terminal (A3) 1 of ABS control (motor) relay and body ground.**

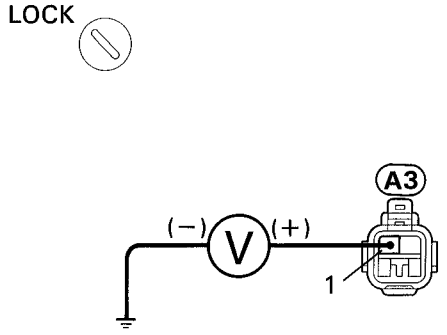

P Disconnect the ABS control relay connector.

C Measure voltage between terminal (A3) 1 of ABS control relay harness side connector and body ground.

OK **Voltage: 10 – 14 V**

OK

NG **Check and repair harness or connector.**

2 **Check continuity between terminals (A3) 2 and (A2) 2, (A2) 2 and (A2) 5, (A2) 5 and (A11) 8.**

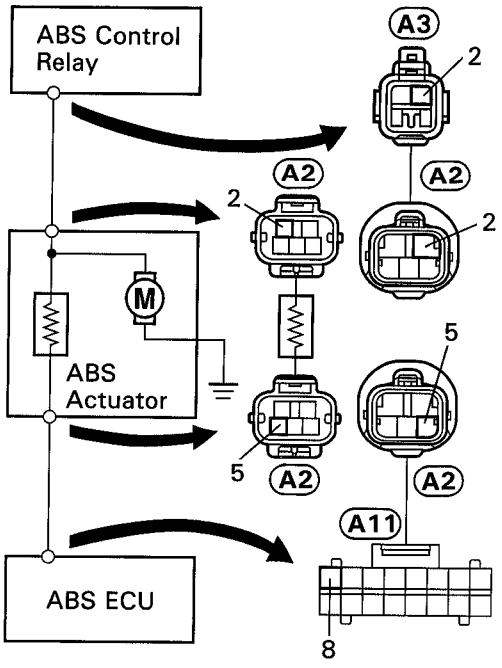

P Disconnect the 2 connectors from ABS actuator.

C Check continuity between terminals (A3) 2 and (A2) 2, (A2) 2 and (A2) 5, (A2) 5 and (A11) 8.

OK **Continuity**

HINT: There is a resistance of 26 ~ 40 Ω between terminals (A2) 2 and (A2) 5.

OK

NG **Repair or replace harness or ABS actuator.**

BR

3 Check ABS control (motor) relay.

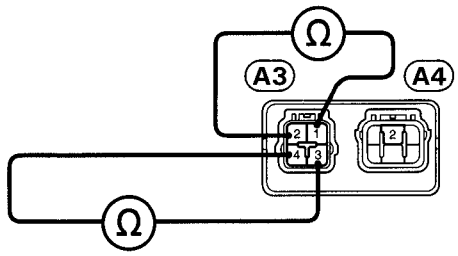

C Check continuity between each terminal of ABS control relay.

OK

Tarminals (A3) 3 and (A3) 4	Continuity (Reference value 62 Ω)
Terminals (A3) 1 and (A3) 2	Open

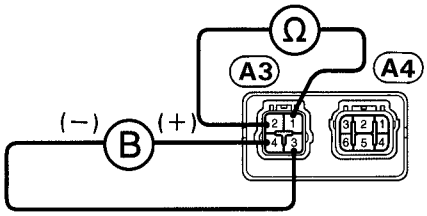

C
1. Apply battery voltage between terminals (A3) 3 and (A3) 4.
2. Check continuity between each terminal of ABS control relay.

OK

Terminals (A3) 1 and (A3) 2	Continuity

W00572
W00573

OK

NG 〉 **Replace ABS control relay.**

4 Check for open and short in harness and connector between ABS control relay and ABS ECU (See page IN-24).

OK

NG 〉 **Repair or replace harness or connector.**

If the same code is still output after the DTC is deleted, check the contact condition of each connection.
If the connections are normal, the ECU may be defective.

BR

DTC 21, 22, 23 ABS Actuator Solenoid Circuit

CIRCUIT DESCRIPTION

This solenoid goes on when signals are received from the ECU and controls the pressure acting on the wheel cylinders, thus controlling the braking force.

DTC No.	DTC Detecting Condition	Trouble Area
21	Conditions (1) through (3) continue for 0.02 sec. or more: (1) ABS control (solenoid) relay terminal (SR) voltage: Battery positive voltage (2) Voltage of ABS ECU terminal AST: Battery positive voltage (3) When power transistor of ECU is ON, voltage of terminal SFRR or SFRH is 0 V or battery positive voltage.	• ABS actuator • Open or short in SFRR or SFRH circuit • ECU
22	Conditions (1) through (3) continue for 0.02 sec. or more: (1) ABS control (solenoid) relay terminal (SR) voltage: Battery positive voltage (2) Voltage of ABS ECU terminal AST: Battery positive voltage (3) When power transistor of ECU is ON, voltage of terminal SFLR or SFLH is 0 V or battery positive voltage.	• ABS actuator • Open or short in SFLR or SFLH circuit • ECU
23	Conditions (1) through (3) continue for 0.02 sec. or more: (1) ABS control (solenoid) relay terminal (SR) voltage: Battery positive voltage (2) Voltage of ABS ECU terminal AST: Battery positive voltage (3) When power transistor of ECU is ON, voltage of terminal SRR or SRH is 0 V or battery positive voltage.	• ABS actuator • Open or short in SRR or SRH circuit • ECU

Fail safe function: If trouble occurs in the actuator solenoid circuit, the ECU cuts off current to the ABS control (solenoid) relay and prohibits ABS control.

WIRING DIAGRAM

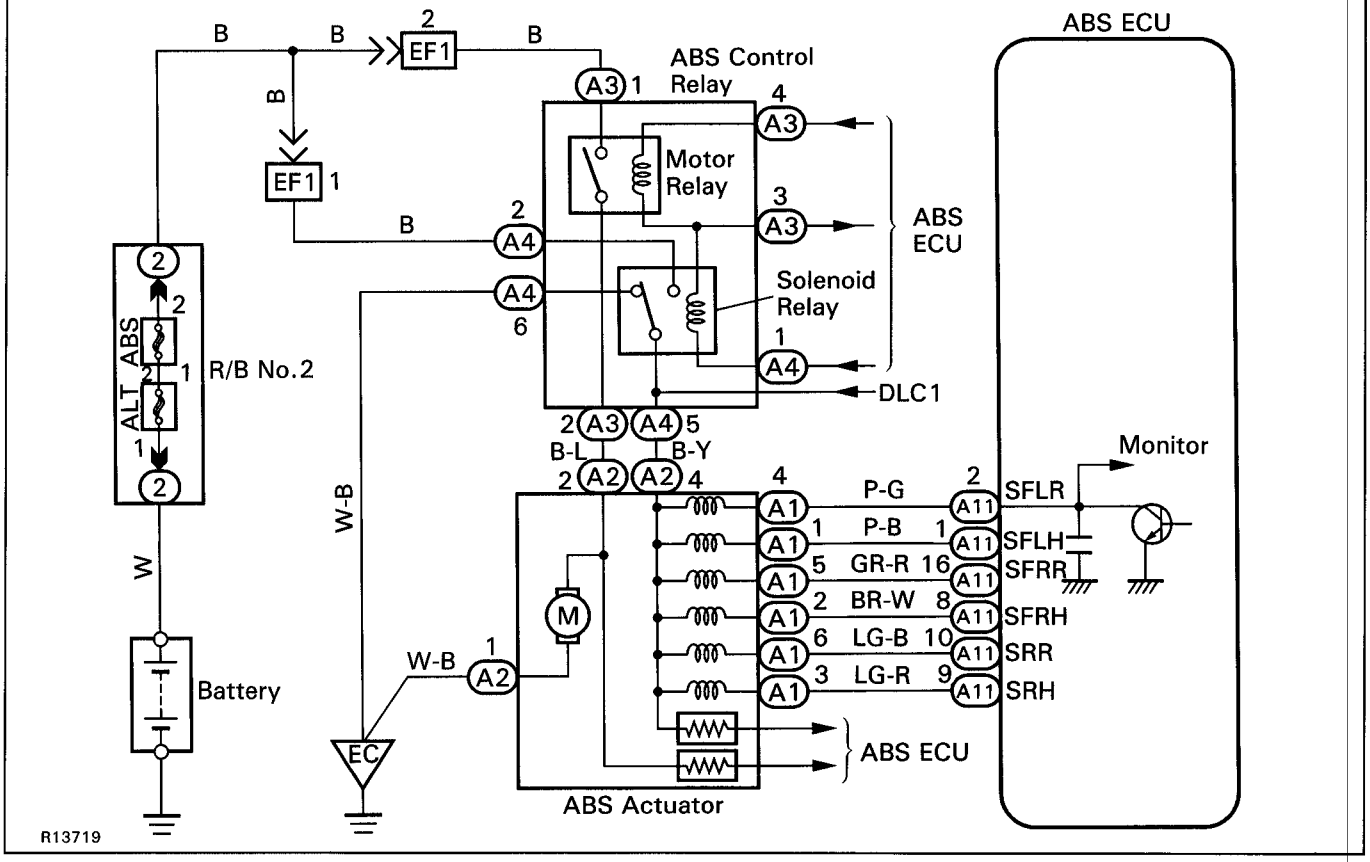

INSPECTION PROCEDURE

1 **Check ABS actuator solenoid.**

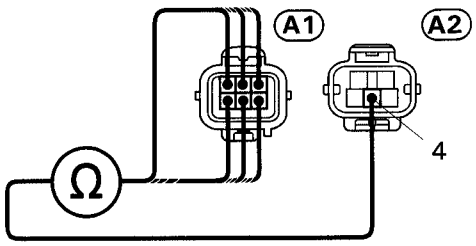

P Disconnect the 2 connectors from ABS actuator.

C Check continuity between terminals (A2) 4 and (A1) 1, 2, 3, 4, 5, 6 of ABS actuator connector.

OK **Continuity**

HINT: Resistance of each solenoid coil
SFRH, SFLH, SRH: 5.0 Ω
SFRR, SFLR, SRR: 2.2 Ω

OK

NG **Replace ABS actuator.**

2 **Check for open and short in harness and connector between ABS ECU and actuator (See page IN-24).**

OK

NG **Repair or replace harness or connector.**

If the same code is still output after the DTC is deleted, check the contact condition of each connection.
If the connections are normal, the ECU may be defective.

DTC 31, 32, 33, 34, 35, 36 Speed Sensor Circuit

CIRCUIT DESCRIPTION

The speed sensor detects the wheel speed and sends the appropriate signals to the ECU. These signals are used to control the ABS system. The front and rear rotors each have 48 serrations.
When the rotors rotate, the magnetic field emitted by the permanent magnet in the speed sensor generates an AC voltage. Since the frequency of this AC voltage changes in direct proportion to the speed of the rotor, the frequency is used by the ECU to detect the speed of each wheel.

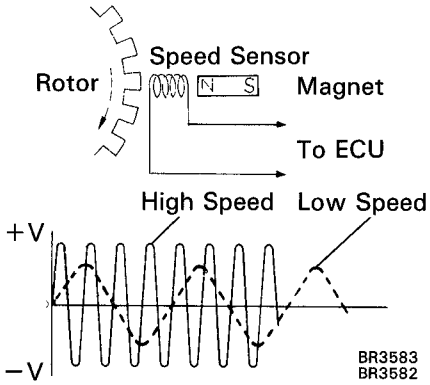

DTC No.	DTC Detecting Condition	Trouble Area
31, 32, 33, 34	Detection of any of conditions (1) through (3): (1) At vehicle speed of 10 km/h (6 mph) or more, pulses are not input for 5 sec. (2) Momentary interruption of the speed sensor signal occurs at least 7 times in the time between switching the ignition switch ON and switching it OFF. (3) Abnormal fluctuation of speed sensor signals with the vehicle speed 20 km/h (12 mph) or more.	• Right front, left front, right rear and left rear speed sensor • Open or short in each speed sensor circuit • ECU
35	Speed sensor signal is not input for about 1 sec. while the left front and right rear speed sensor signals are being checked with the IG switch ON.	• Open in left front or right rear speed sensor circuit • ECU
36	Speed sensor signal is not input for about 1 sec. while the right front and left rear speed sensor signals are being checked with the IG switch ON.	• Open in right front or left rear speed sensor circuit • ECU

HINT: DTC No.31 is for the right front speed sensor.
DTC No.32 is for the left front speed sensor.
DTC No.33 is for the right rear speed sensor.
DTC No.34 is for the left rear speed sensor.

Fail safe function: If trouble occurs in the speed sensor circuit, the ECU cuts off current to the ABS control (solenoid) relay and prohibits ABS control.

WIRING DIAGRAM

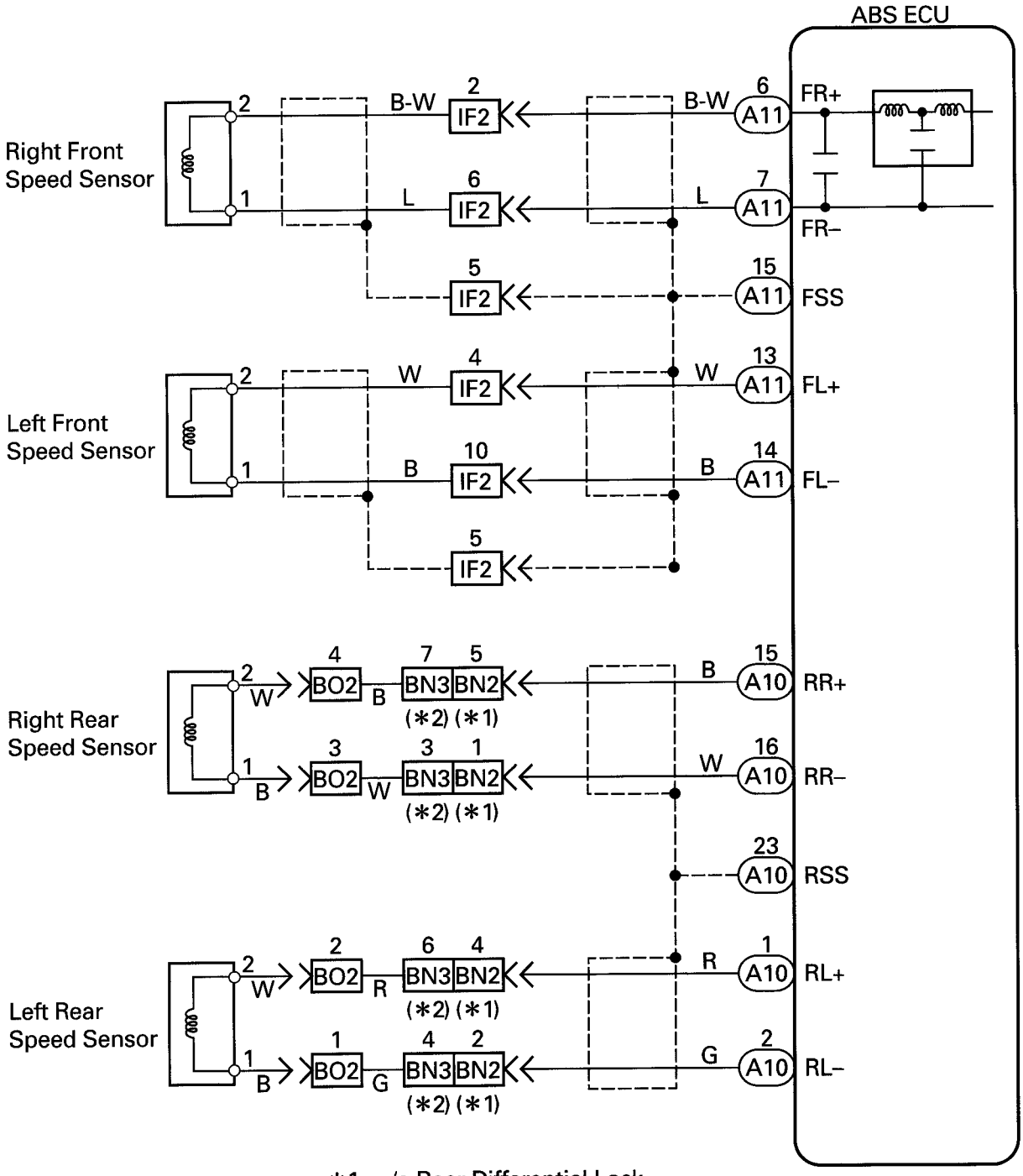

*1: w/o Rear Differential Lock
*2: w/ Rear Differential Lock

W01171

INSPECTION PROCEDURE

1 Check speed sensor.

Front

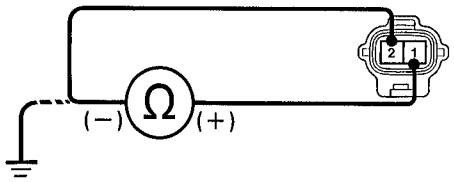

Rear

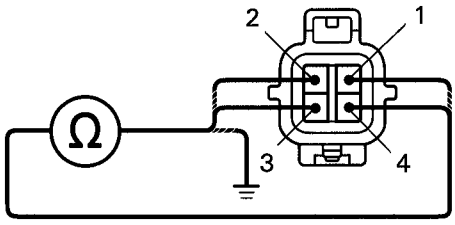

R14205
R15781

Front

P Disconnect speed sensor connector.

C Measure resistance between terminals 1 and 2 of speed sensor connector.

OK **Resistance: 0.9 — 1.3 kΩ**

C Measure resistance between terminals 1 and 2 of speed sensor connector and body ground.

OK **Resistance: 1 MΩ or higher**

Rear

P Disconnect speed sensor connector.

C Measure resistance between terminals 1 and 2, 3 and 4 of speed sensor connector.

OK **Resistance: 0.9 — 1.3 kΩ**

C Measure resistance between terminals 1 and 2, 3 and 4 of speed sensor connector and body ground.

OK **Resistance: 1 MΩ or higher**

BR

OK

NG **Replace speed sensor.**

NOTICE: Check the speed sensor signal last (See page BR-51).

2 Check for open and short in harness and connector between each speed sensor and ECU (See page IN-24).

OK

NG **Repair or replace harness or connector.**

3 Check sensor rotor and sensor installation

Front

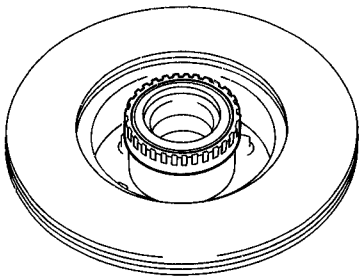

Rear

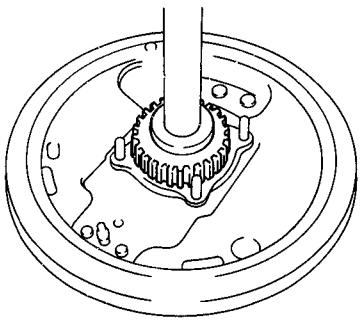

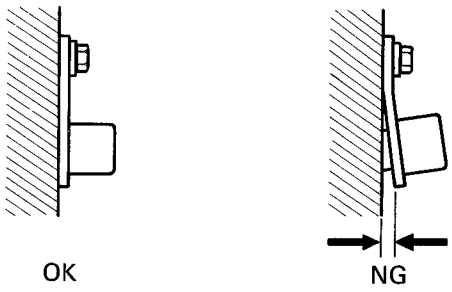

R07880
R07772
BR3795

Front

P Remove brake disc (See SA section).

C Check sensor rotor serrations.

OK **No scratches or missing teeth.**

C Check the front speed sensor installation.

OK **The installation bolt is tightened properly.**

Rear

P Remove the axle shaft (See SA section).

C Check the sensor rotor serrations.

OK **No scratches or missing teeth.**

C Check the speed sensor installation.

OK **The installation bolt is tightened properly and there is no clearance between the sensor and rear axle carrier.**

OK

NG **Replace speed sensor or rotor.**

NOTICE: Check the speed sensor signal last (See page BR-51).

Check and replace ABS ECU.

DTC 37 Neither Front Speed Sensor Rotor Missing

CIRCUIT DESCRIPTION

DTC No.	DTC Detecting Condition	Trouble Area
37	With the front wheels stationary and rear wheels rotating at 20+ km/h (12+ mph) for 10+ secs, turn ignition switch ON then OFF 8 times, in succession.	• Front axle hub • Right front, left front speed sensor • Wire harness for sensor system • ECU

INSPECTION PROCEDURE

1 Check front axle hub (See page SA-13 or SA-21).

- OK
- NG → Replace front axle hub.

2 Check front speed sensor (See page BR-51).

- OK
- NG → Replace front speed sensor.

3 Check for open or short in harness and connector between speed sensor and ECU (See page IN-24).

- OK
- NG → Repair or replace harness and connector.

Check and replace ABS ECU.

DTC 37 Tires of Different Size (2WD vehicles)

CIRCUIT DESCRIPTION

DTC No.	DTC Detecting Condition	Trouble Area
37	Driving at more than 30 km/h (19 mph) for more than 60 seconds with 1 or 2 tires of different size.	• Tire size • ECU

BR

INSPECTION PROCEDURE

1 **Check tire size.**

OK

NG → **Replace tires so that all 4 tires are of the same size.**

Check and replace ABS ECU.

DTC 41 IG Power Source Circuit

CIRCUIT DESCRIPTION

This is the power source for the ECU, hence the CPU, and the actuators.

DTC No.	DTC Detecting Condition	Trouble Area
41	Vehicle speed is 3 km/h (1.9 mph) or more and voltage of ECU termianl IG1 remains at more than 17 V or below 9.5 V for more than 10 sec.	• Battery • IC regulator • Open or short in power source circuit • ECU

Fail safe function: If trouble occurs in the power source circuit, the ECU cuts off current to the ABS control (solenoid) relay and prohibits ABS control.

WIRING DIAGRAM

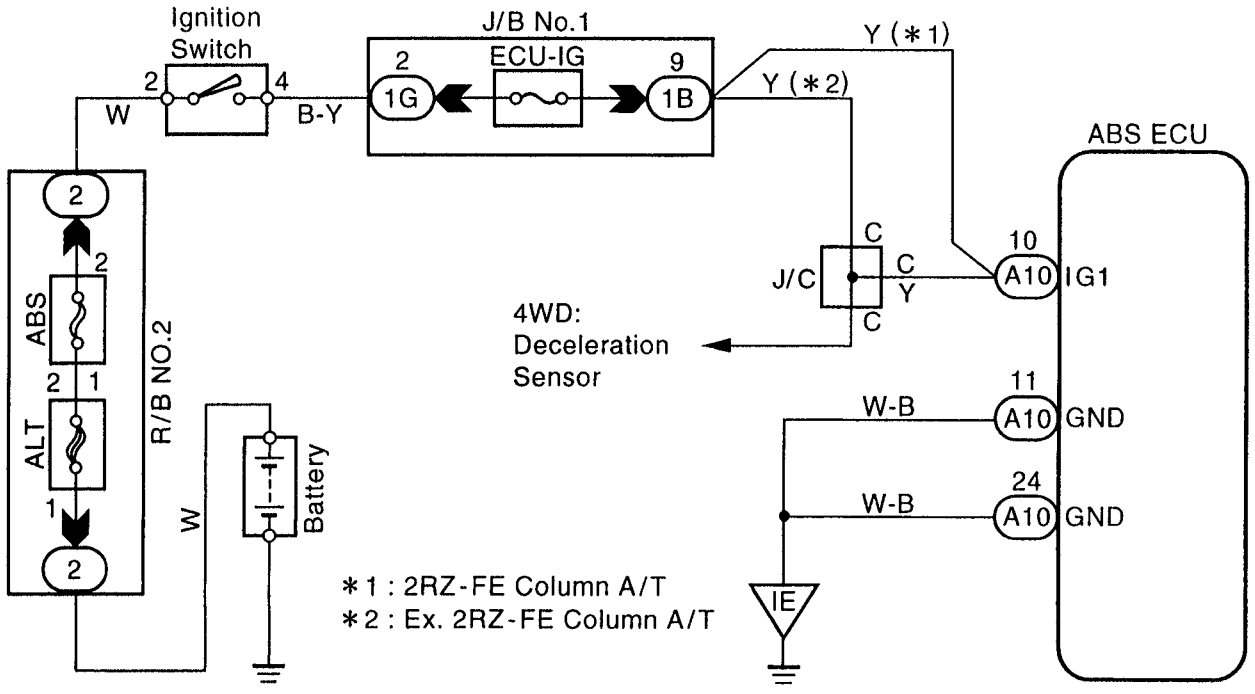

W01169

INSPECTION PROCEDURE

1 **Check battery positive voltage.**

OK **Voltage: 10 – 14 V**

OK

NG > **Check and repair the charging system.**

2 **Check voltage between terminals IG1 and GND of ABS ECU connector.**

ON

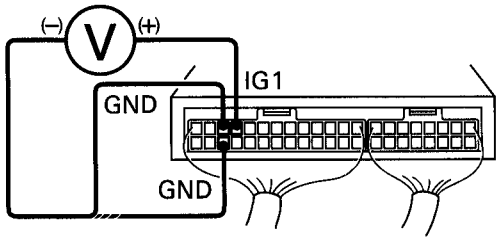

BE6653
R15782

P Remove ABS ECU with connectors still connected.

C 1. Turn the ignition switch ON.
2. Measure voltage between terminals IG1 and GND of ABS ECU connector.

OK **Voltage: 10 – 14 V**

NG

OK > **Check and replace ABS ECU.**

3 **Check continuity between terminals GND of ABS ECU connector and body ground.**

LOCK

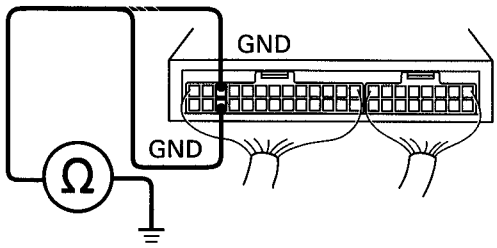

BE6653
R15783

C Measure resistance between terminals GND of ABS ECU connector and body ground.

OK **Resistance: 1 Ω or less**

OK

NG > **Repair or replace harness or connector.**

BR

4 **Check ECU-IG fuse.**

J/B No.1

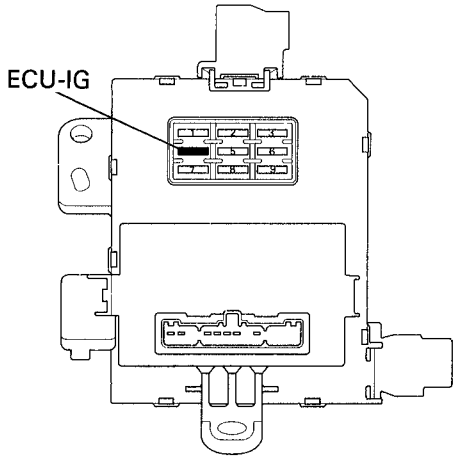

N14134

P Remove ECU-IG fuse from J/B No.1.

C Check continuity of ECU-IG fuse.

OK **Continuity**

NG → **Check for short in all the harness and components connected to ECU-IG fuse (See attached wiring diagram).**

OK →

Check for open in harness and connector between ABS ECU and battery (See page IN-24).

DTC 43 Malfunction in Deceleration Sensor

CIRCUIT DESCRIPTION

DTC No.	DTC Detecting Condition	Trouble Area
43	Either of the following (1) or (2) is detected: (1) After the battery terminal is connected, input from the deceleration sensor does not change at one cycle (0 km/h→ more than 30 km/h→ 0 km/h) for 16 times continuously. (2) When the brake pedal is not depressed at vehicle speed of 5 km/h or more, forward and backward G (more than 0.4G) is detected for 30 seconds or more.	• Deceleration sensor • Wire harness for deceleration sensor system • ECU

INSPECTION PROCEDURE

1 **Check deceleration sensor (See page BR-51).**

NG → **Replace deceleration sensor.**

OK →

2 **Check for open or short in harness and connector between sensor and ECU (See page IN-24).**

OK

NG → **Repair or replace harness and connector.**

Check and replace ABS ECU.

DTC 44 Deceleration Sensor Circuit

CIRCUIT DESCRIPTION

This sensor detects deceleration on the vehicle. The sensor signal is used in ABS control. If the sensor functions abnormally, the ABS warning light comes on but the ABS still operates.

DTC No.	DTC Detecting Condition	Trouble Area
44	Either of the following (1) or (2) is detected: (1) An open or short is detected in circuit GS1 or GS2 for 1 sec. (2) After the ignition is turned ON, the test signal is output by GST. During this time, a trouble signal is detected for 0.5 sec.	• Deceleration sensor • Open or short in deceleration sensor circuit • ECU

WIRING DIAGRAM

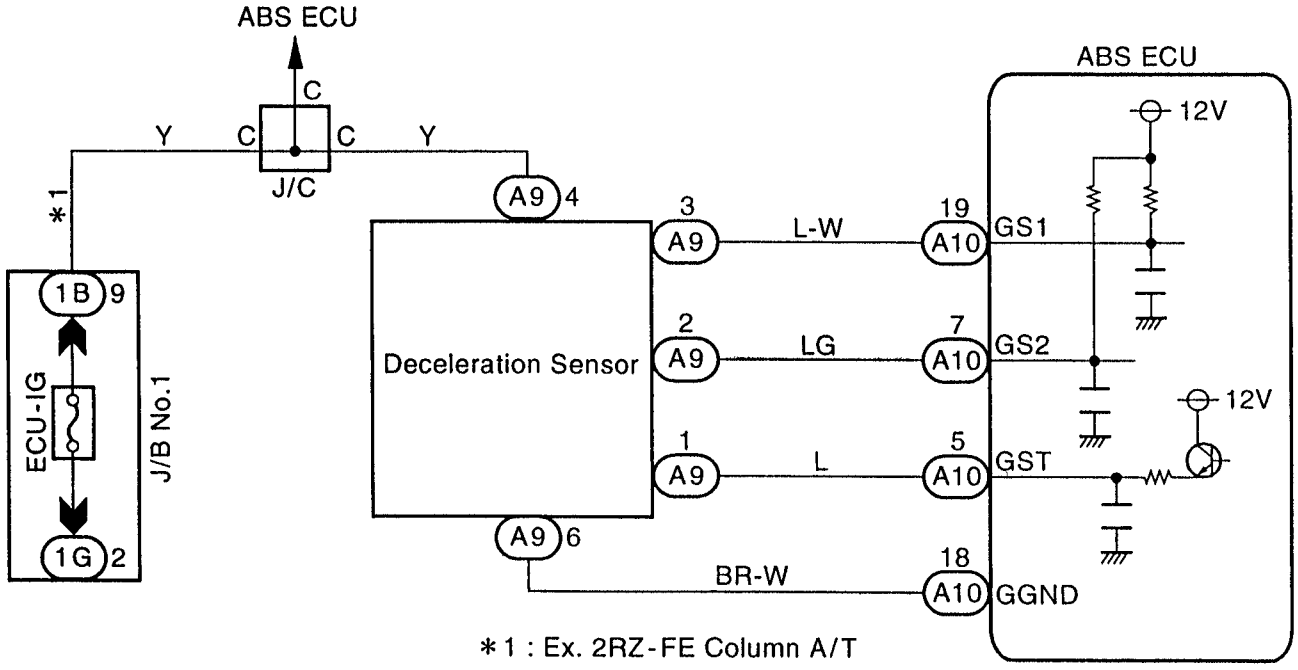

*1 : Ex. 2RZ-FE Column A/T

W01168

BR

INSPECTION PROCEDURE

1 **Check for open and short in harness and connector between sensor and ECU (See page IN-24).**

OK

NG → **Repair or replace harness or connector.**

2 **Check voltage between terminals GS1, GS2, GST of ECU and body ground.**

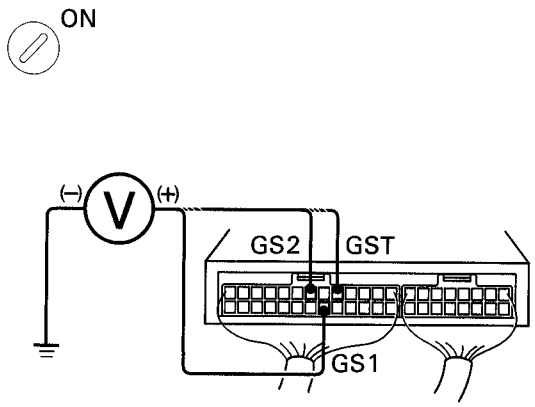

P
1. Remove ABS ECU with connectors still connected.
2. Disconnect sensor connector.
3. Turn the ignition switch ON.

C Measure voltage between terminals GS1,GS2,GST of ECU and body ground.

OK **Voltage:**
GS1,GS2: 10 – 14 V
GST: As shown below

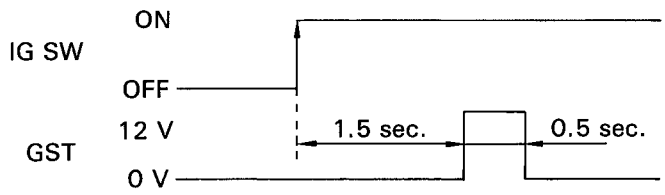

OK

NG → **Check and replace ABS ECU.**

BR

Check and replace deceleration sensor.

DTC 48 Rear Differential Lock circuit (w/ Rear Differential Lock)

CIRCUIT DESCRIPTION

DTC No.	DTC Detecting Condition	Trouble Area
48	Open or short circuit in rear differential lock circuit. Rear differential is locking.	• Rear differential lock • ECU

WIRING DIAGRAM

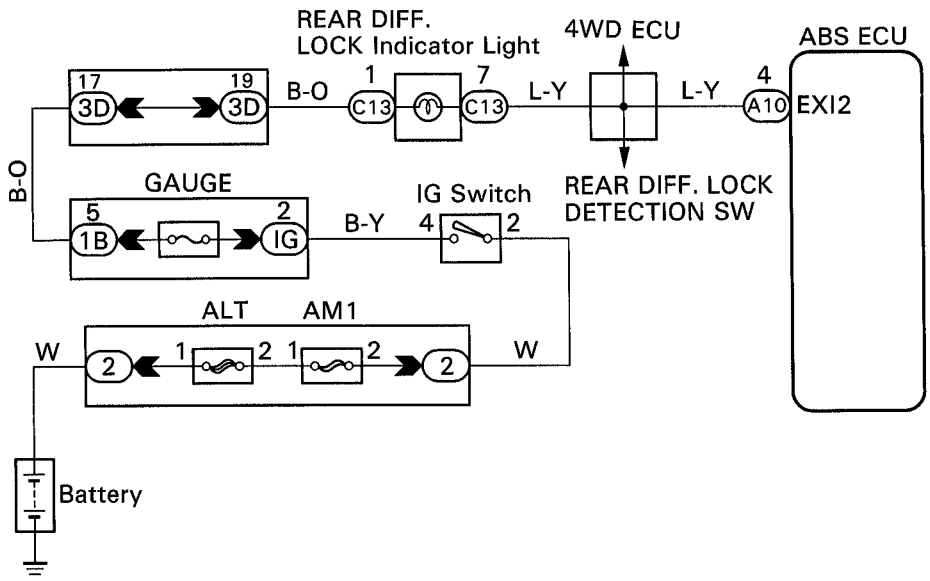

W01019

INSPECTION PROCEDURE

HINT: Rear differential lock switch is OFF.

1 Check the rear differential lock is free (See page SA-151).

- OK
- NG → Repair the rear differential lock system.

2 Is DTC output?

Check DTC on page BR-46.

- YES
- NO → Normal.

3 Check that rear differential lock indicator light close not go off.

- YES
- NO → Go to step 6.

4 Check that bulb for rear differential lock indicator light is not burnt out.

- NO
- YES → Replace indicator light.

BR

5 Check for open in harness and connector between battery and rear differential lock indicator light, rear lock indicator light and ABS ECU (See page IN-24).

OK

NG → Repair or replace harness or connector.

Check and replace ABS ECU.

6 Check for short in harness and connector between rear differential lock indicator light and ABS ECU (See page IN-24).

OK

NG → Repair or replace harness or connector.

Check and replace ABS ECU.

DTC 51 ABS Pump Motor Lock

CIRCUIT DESCRIPTION

DTC No.	DTC Detecting Condition	Trouble Area
51	Pump motor is not operating normally during initial check.	• ABS pump motor

Fail safe function: If trouble occurs in the ABS pump motor, the ECU cuts off current to the ABS control (solenoid) relay and prohibits ABS control.

WIRING DIAGRAM

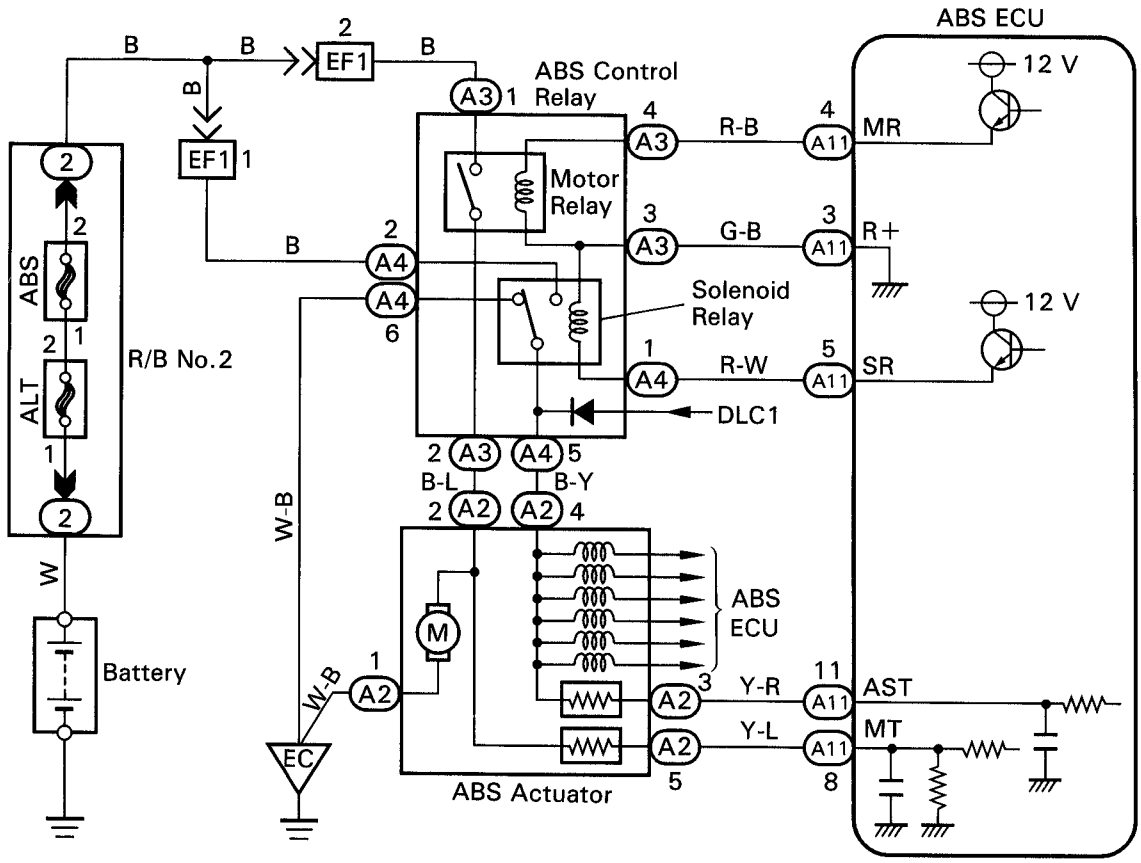

R13718

BR

Stop Light Switch Circuit

CIRCUIT DESCRIPTION

This stop light switch senses whether the brake pedal is depressed or released, and sends the signal to the ECU.

WIRING DIAGRAM

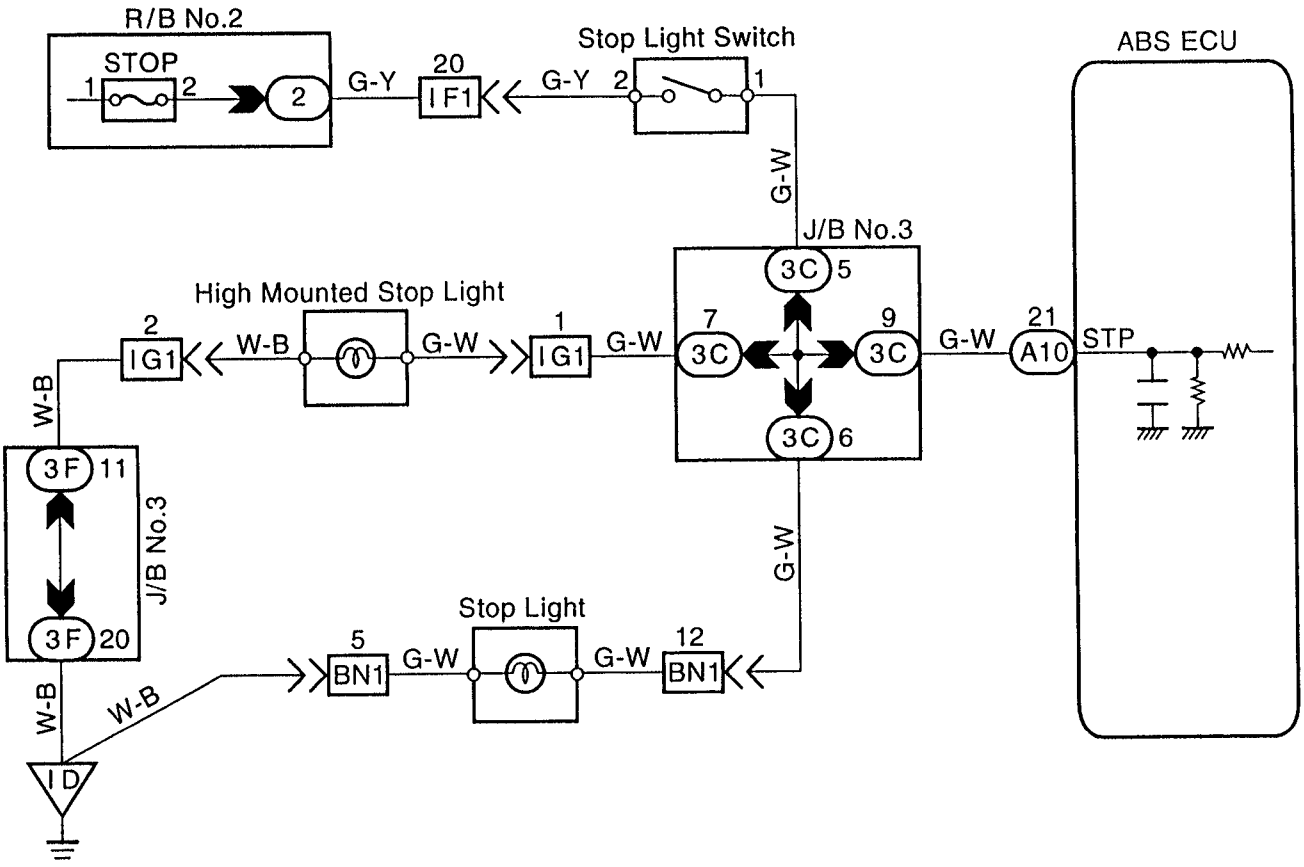

INSPECTION PROCEDURE

BR

1 Check operation of stop light.

C Check that stop light lights up when brake pedal is depressed and turns off when brake pedal is released.

OK

NG > **Repair stop light circuit (See page BE-24).**

2 Check voltage between terminal STP of ABS ECU and body ground.

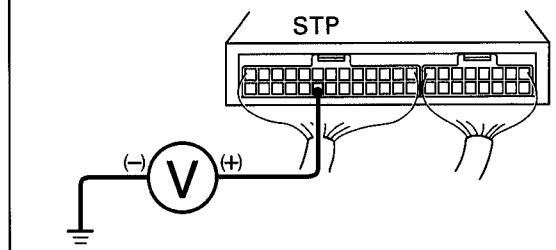

P Remove ABS ECU with connectors still connected.

C Measure voltage between terminal STP of ABS ECU and body ground when brake pedal is depressed.

OK **Voltage: 8 – 14 V**

NG

OK > **Proceed to next circuit inspection shown on problem symptoms chart (See page BR-54).**

3	Check for open in harness and connector between ABS ECU and stop light switch (See page IN-24).

OK

NG → Repair or replace harness or connector.

Check and replace ABS ECU.

ABS Warning Light Circuit

CIRCUIT DESCRIPTION

If the ECU detects trouble, it lights the ABS warning light while at the same time prohibiting ABS control. At this time, the ECU records a DTC in memory.
After removing the short pin of the DLC1, connect terminals Tc and E1 of the DLC1 to make the ABS warning light blink and output the DTC.

WIRING DIAGRAM

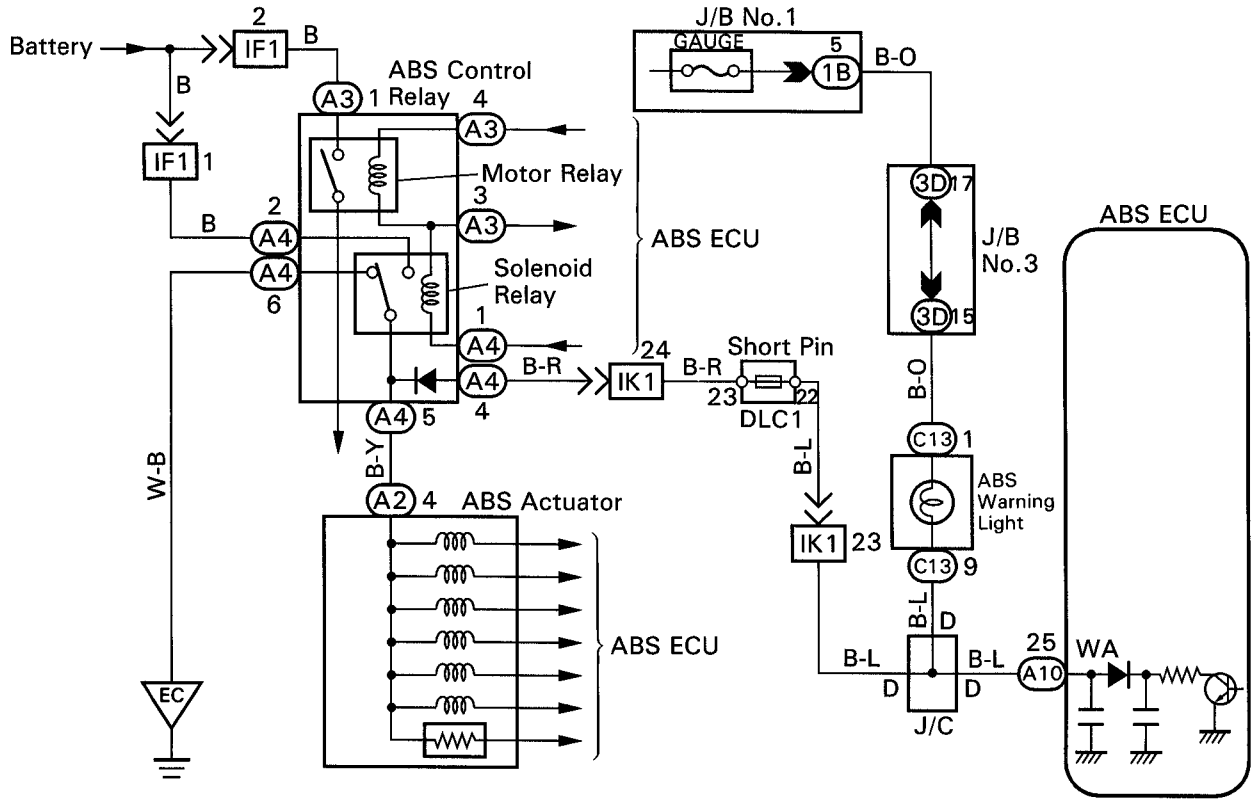

R13724

BR

INSPECTION PROCEDURE

Troubleshoot in accordance with the chart below for each trouble symptom.

ABS warning light does not light up	Go to step 1
ABS warning light remains on	Go to step 3

1 Check ABS warning light.

See Combination Meter Troubleshooting on page BE-33.

OK

NG > **Replace bulb or combination meter assembly.**

2 Check ABS control relay.

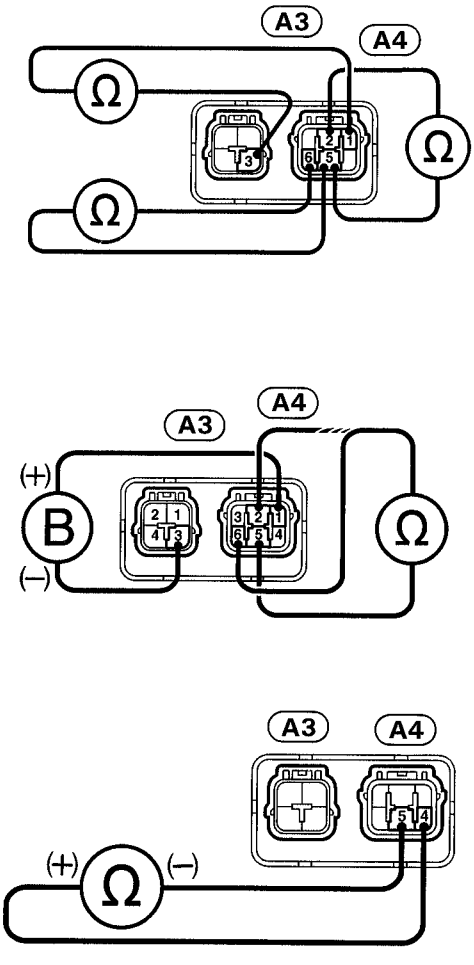

R14139
R14140
R14144

P Disconnect the connectors from control relay.

C Check continuity between each terminal of ABS control relay.

OK

Terminals (A4) 1 and (A3) 3	Continuity (Reference value 80 Ω)
Terminals (A4) 5 and (A4) 6	Continuity
Terminals (A4) 2 and (A4) 5	Open

C
1. Apply battery voltage between terminals (A4) 1 and (A3) 3.
2. Check continuity between each terminal of ABS control relay.

OK

Terminals (A4) 5 and (A4) 6	Open
Terminals (A4) 2 and (A4) 5	Continuity

C Connect the ⊕ test lead to terminal 4 of (A4) and the ⊖ lead to terminal 5 of (A4) . Check continuity between the terminals.

OK **Continuity**
If there is no continuity, connect the ⊖ test lead to terminal 4 of (A4) and the ⊕ lead to terminal 5 of (A4) . Recheck continuity between terminals.

OK

NG > **Replace ABS control relay.**

Check for open in harness and connector between DLC1 and ABS control relay and body ground (See page IN-24).

3 **Is DTC output?**

Check DTC on page BR-46.

NO

YES > **Repair circuit indicated by the code output.**

4 **Does ABS warning light go off if short pin is removed?**

YES

NO > **Check for short in harness and connector between warning light and DLC1 and ECU (See page IN-24).**

5 **Check ABS control relay (See step No.2).**

OK

NG > **Replace ABS control relay.**

Check for short in harness and connector between DLC1 and ABS control relay (See page IN-24).

Tc Terminal Circuit

CIRCUIT DESCRIPTION

Connecting terminals Tc and E1 of the DLC1 causes the ECU to display the DTC by flasing the ABS warning light.

BR

WIRING DIAGRAM

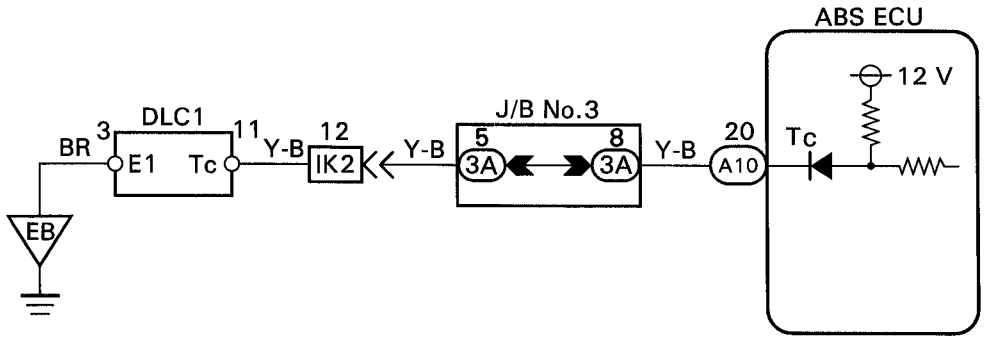

R13725

INSPECTION PROCEDURE

1 **Check voltage between terminals Tc and E1 of DLC1.**

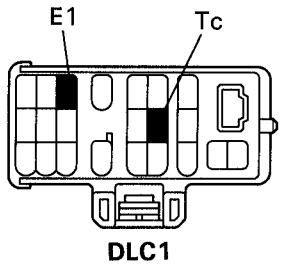

lei-23-1-A

C
1. Turn the ignition switch ON.
2. Measure voltage between terminals Tc and E1 of DLC1.

OK **Voltage: 10 – 14 V**

NG

OK > **If ABS warning light does not blink even after Tc and E1 are connected, the ECU may be defective.**

2 **Check for open and short in harness and connector between ABS ECU and DLC1, DLC1 and body ground (See page IN-24).**

OK

NG > **Repair or replace harness or connector.**

Check and replace ABS ECU.

Ts Terminal Circuit

BR

CIRCUIT DESCRIPTION

The sensor check circuit detects abnormalities in the speed sensor signal which cannot be detected with the DTC check.
Connecting terminals Ts and E1 of the DLC1 in the engine compartment starts the check.

WIRING DIAGRAM

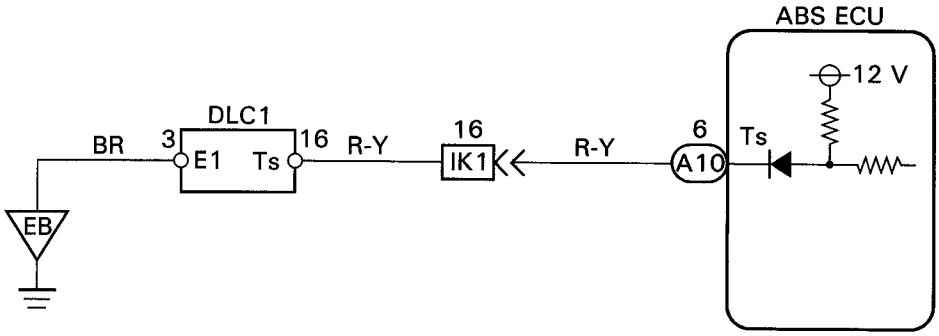

R13726

INSPECTION PROCEDURE

1 **Check voltage between terminals Ts and E1 of DLC1.**

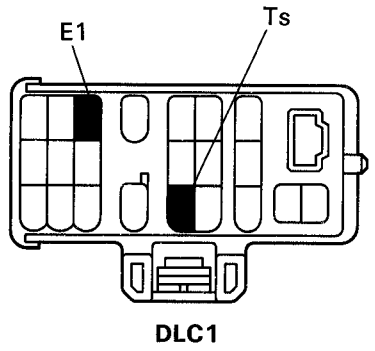

lei-23-1-A

C
1. Turn the ignition switch ON.
2. Measure voltage between terminals Ts and E1 of DLC1.

OK **Voltage: 10 – 14 V**

NG

OK → **If ABS warning light does not blink even after Ts and E1 are connected, the ECU may be defective.**

2 **Check for open and short in harness and connector between ABS ECU and DLC1, DLC1 and body ground (See page IN-24).**

OK

NG → **Repair or replace harness or connector.**

Check and replace ABS ECU.

Check for Fluid Leakage

BR

Check for fluid leakage from actuator or hydraulic lines.

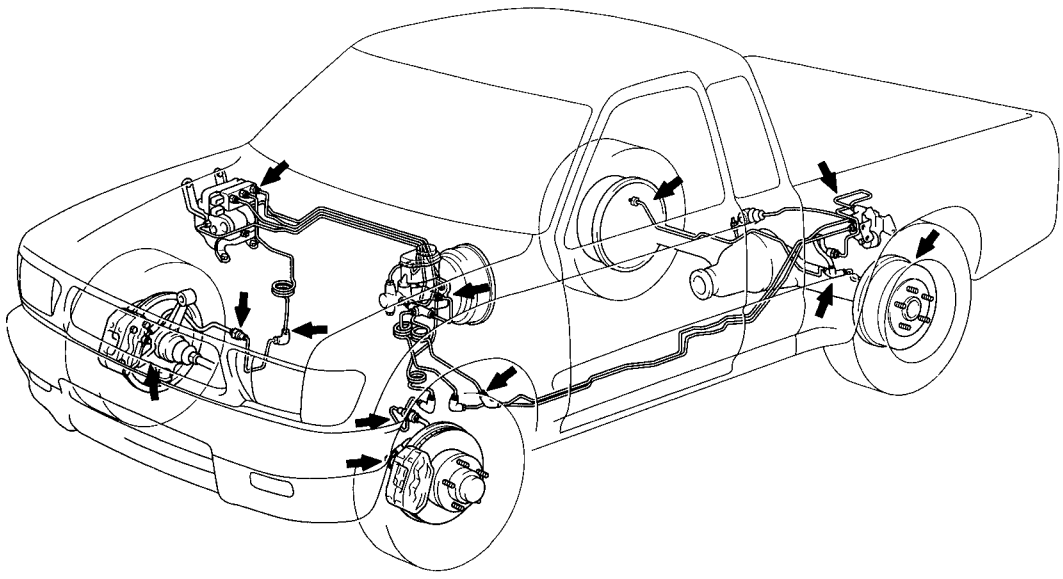

R15791

SERVICE SPECIFICATIONS

SERVICE DATA

BR03A–28

Brake pedal height (from asphalt sheet)		159.1 – 169.1 mm (6.264 – 6.657 in.)
Brake pedal freeplay		3 – 6 mm (0.12 – 0.24 in.)
Brake pedal reserve distance at 490 N (50 kgf, 110.2 lbf)		More than 72 mm (2.83 in.)
Brake booster push rod to piston clearance (w/SST)		0 mm (0 in.)
Front brake pad thickness		
2WD	STD	12.0 mm (0.472 in.)
	Minimum	1.0 mm (0.039 in.)
4WD	STD	11.5 mm (0.453 in.)
	Minimum	1.0 mm (0.039 in.)
Disc thickness	STD	22.0 mm (0.866 in.)
	Minimum	20.0 mm (0.787 in.)
Disc runout	Maximum	0.07 mm (0.0028 in.)
Rear brake drum inside diameter		
2WD	STD	254.0 mm (10.00 in.)
	Maximum	256.0 mm (10.08 in.)
4WD	STD	295.0 mm (11.61 in.)
	Maximum	297.0 mm (11.69 in.)
Rear brake shoe lining thickness		
2WD	STD	5.5 mm (0.217 in.)
	Minimum	1.0 mm (0.039 in.)
4WD	STD	6.0 mm (0.236 in.)
	Minimum	1.0 mm (0.039 in.)
Rear brake drum to shoe clearance		0.6 mm (0.024 in.)
Parking brake lever travel at 196 N (20 kgf, 44 lbf)		12 – 18 clicks

BR03B–22

TORQUE SPECIFICATIONS

Part tightened		N·m	kgf·cm	ft·lbf
Master cylinder x Piston stopper bolt	w/ ABS	10	100	7
	w/o ABS	8	80	60 in.·lbf
Master cylinder x Reservoir	w/ ABS	1.7	18	16 in.·lbf
	w/o ABS	1.5	15	13 in.·lbf
Master cylinder x Brake booster		13	130	9
Brake line union nut		15	155	11
Brake booster clevis lock nut		25	260	19
Brake booster x Pedal bracket		13	130	9
Bleeder plug		11	110	8
Front disc brake caliper x Sliding pin	2WD	88	900	65
Front disc brake caliper x Steering knuckle	4WD	123	1,250	90
Front disc brake torque plate x Steering knuckle	2WD	108	1,100	80
Front disc x Front axle hub	2WD	64	650	47
Front disc brake caliper x Flexible hose		30	310	22
Rear drum brake wheel cylinder x Backing plate		10	100	7
Parking brake bellcrank bracket x Backing plate		13	130	9
LSP & BV x LSP & BV bracket		13	130	9
LSP & BV x Load Sensing Spring Assembly		18	185	13
Load Sensing Spring Assembly x Shackle No.1		18	185	13
Shackle No.1 x Shackle No.2		24	250	18
Shackle No.2 x Shackle Bracket		13	130	9
LSP & BV bracket x Frame		29	300	22
ABS actuator x ABS actuator bracket		5.4	55	48 in.·lbf
ABS actuator bracket x Body		19	195	14
Speed sensor installation bolt		8	82	71 in.·lbf

BR

STEERING

PRECAUTION ..... SR– 2
PREPARATION ..... SR– 2
TROUBLESHOOTING ..... SR– 7
ON–VEHICLE INSPECTION ..... SR– 7
NON–TILT STEERING COLUMN ..... SR– 13
TILT STEERING COLUMN ..... SR– 25
TILT STEERING COLUMN (NASTECH) ..... SR– 32
POWER STEERING VANE PUMP (2RZ–FE, 3RZ–FE) ..... SR– 35
POWER STEERING VANE PUMP (5VZ–FE) ..... SR– 44
MANUAL STEERING GEAR ..... SR– 51
POWER STEERING GEAR (2WD) ..... SR– 61
POWER STEERING GEAR (4WD) ..... SR– 76
SERVICE SPECIFICATIONS ..... SR– 88

PRECAUTION

SR0XA–08

- **Care must be taken to replace parts properly because they could affect the performance of the steering system and result in a driving hazard.**
- **The TOYOTA TACOMA is equipped with an SRS (Supplemental Restraint System) such as the driver airbag and front passenger airbag. Failure to carry out service operation in the correct sequence could cause the SRS to unexpectedly deploy during servicing, possibly leading to a serious accident. Before servicing (including removal or installation of parts, inspection or replacement), be sure to read the precautionary notices in the RS section.**

PREPARATION

SR127–07

SST (SPECIAL SERVICE TOOLS)

	09608–04031	Front Hub Inner Bearing Cone Replacer	PS vane pump
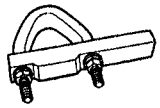	09612–00012	Rack & Pinion Steering Rack Housing Stand	Manual steering gear PS gear (2WD and 4WD)
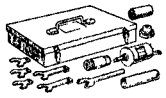	09612–24014	Steering Gear Housing Overhaul Tool Set	
	(09616–10010)	Steering Pinion Bearing Adjusting Socket	Manual steering gear
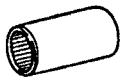	09616–00010	Steering Worm Bearing Adjusting Socket	PS gear (2WD and 4WD)
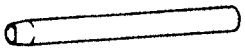	09631–00350	Steering Rack Cover 35	PS gear (4WD)
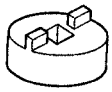	09631–10021	Rack Stopper Wrench	Manual steering gear
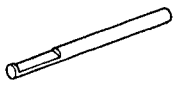	09631–10030	Oil Seal Remover	PS vane pump
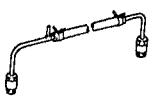	09631–12071	Steering Rack Oil Seal Test Tool	PS gear (2WD and 4WD)
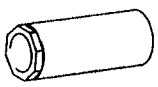	09631–20060	Bearing Guide Nut Wrench	PS gear (2WD and 4WD)

SR

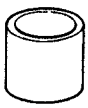	09631–20081	Seal Ring Tool	PS gear (2WD and 4WD)
	09631–20090	Cylinder End Stopper Nut Wrench	PS gear (2WD and 4WD)
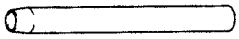	09631–20102	Steering Rack Cover "H"	PS gear (2WD and 4WD)
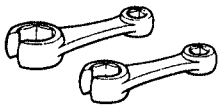	09631–22020	Power Steering Hose Nut 14 x 17 mm Wrench Set	PS gear (2WD and 4WD)
	09633–00020	Power Steering Hose Nut Wrench	PS gear (2WD and 4WD)
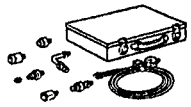	09640–10010	Power Steering Pressure Gauge Set	
	(09641–01010)	Gauge Assy	On–vehicle inspection
	(09641–01030)	Attachment B	On–vehicle inspection
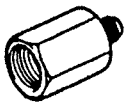	(09641–01060)	Attachment E	On–vehicle inspection
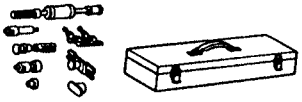	09910–00015	Puller Set	
	(09911–00011)	Puller Clamp	Tilt steering column
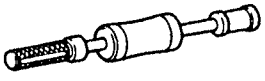	(09912–00010)	Puller Slide Hammer	Tilt steering column
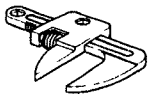	09922–10010	Variable Open Wrench	Manual steering gear PS gear (2WD and 4WD)
	09950–40010	Puller B Set	

SR

	(09957–04010) Attachment	Tilt steering column
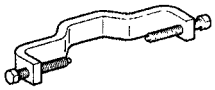	(09958–04010) Holder	Tilt steering column
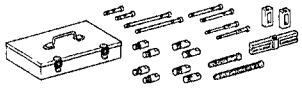	09950–50010 Puller C Set	
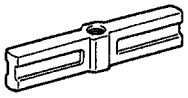	(09951–05010) Hanger 150	Non–tilt steering column Tilt steering column
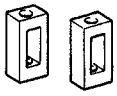	(09952–05010) Slide Arm	Non–tilt steering column Tilt steering column
	(09953–05020) Center Bolt 150	Non–tilt steering column Tilt steering column
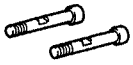	(09954–05020) Claw No.2	Non–tilt steering column Tilt steering column
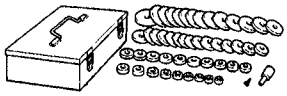	09950–60010 Replacer Set	
	(09951–00180) Replacer 18	PS gear (2WD and 4WD)
	(09951–00250) Replacer 25	Manual steering gear PS gear (2WD and 4WD)
	(09951–00260) Replacer 26	PS gear (2WD and 4WD)
	(09951–00280) Replacer 28	PS gear (2WD and 4WD)
	(09951–00320) Replacer 32	PS gear (2WD and 4WD)
	(09951–00330) Replacer 33	PS gear (2WD and 4WD)

SR

	(09951–00360) Replacer 36	PS gear (2WD and 4WD)
	(09951–00420) Replacer 42	PS gear (2WD and 4WD)
	(09951–00490) Replacer 49	PS gear (4WD)
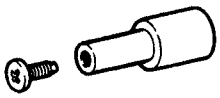	(09952–06010) Adapter	PS gear (2WD and 4WD)
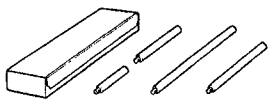	09950–70010 Handle Set	
	(09951–07100) Handle 100	Manual steering gear PS gear (2WD and 4WD)
	(09951–07150) Handle 150	PS gear (2WD and 4WD)
	(09951–07360) Handle 360	PS gear (2WD and 4WD)
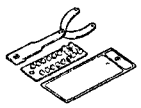	09960–10010 Variable Pin Wrench Set	
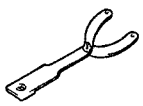	(09962–01000) Variable Pin Wrench Arm Assy	PS vane pump
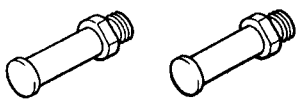	(09963–01000) Pin 10	PS vane pump

SR

RECOMMENDED TOOLS

SR126–07

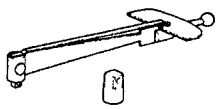	09025–00010 Torque Wrench (30 kgf·cm) .	PS vane pump Manual steering gear PS gear (2WD and 4WD)
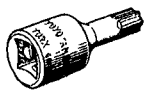	09042–00010 Torx Socket T30 .	Non–tilt steering column Tilt steering column

	09904–00010 Expander Set .	
	(09904–00050) No. 4 Claw	
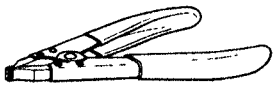	09905–00012 Snap Ring No.1 Expander .	
	09905–00013 Snap Ring Pliers .	

SR12B–06

EQUIPMENT

Belt tension gauge	On–vehicle inspection
Caliper gauge	PS vane pump
Calipers	PS vane pump
Dial indicator	Manual steering gear, PS gear (2WD and 4WD)
Feeler gauge	PS vane pump
Micrometer	PS vane pump
Torque wrench	

SR12A–06

LUBRICANT

Item	Capacity	Classification
Power steering fluid Total	0.8 liters (0.9 US qts, 0.7 Imp.qts)	ATF DEXRON® II or III

SR12B–05

SSM (SPECIAL SERVICE MATERIALS)

SR

	08833–00080 Adhesive 1344, THREE BOND 1344, LOCTITE 242 or equivalent	Manual steering gear PS gear (2WD and 4WD)

TROUBLESHOOTING

SR0XB–0B

Use the table below to help you find the cause of the problem. The numbers indicate the priority of the likely cause of the problem. Check each part in order. If necessary, repair or replace these parts.

See Page / Parts Name / Trouble	Tires (improperly inflated) SA-2	Front wheel alignment (Incorrect) SA-3	PS fluid level (Low) SR-8	Drive belt (Loose) SR-7	Steering system joints (Worn) —	Suspension arm Ball joints (Worn) SA-66 SA-72	Steering column (Binding) —	Universal Joint / Intermediate shaft / Sliding yoke (Worn) SR-18	Steering gear SR-51 SR-61 SR-76	Front wheel bearing (Worn) SA-14 SA-22
Hard steering	1	4	2	3	5	6	7		8	
Poor return	1	2					3		4	
Excessive play					1	2		3	5	4
Abnormal noise			1		2				3	

ARA940604SR2N

V06104

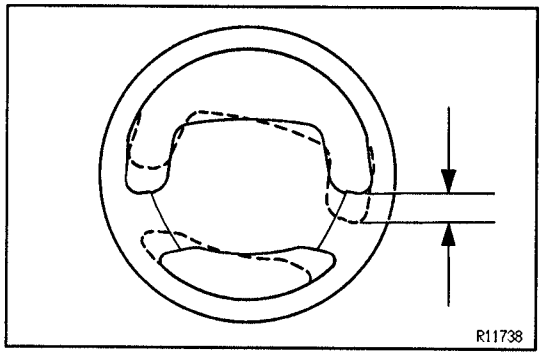

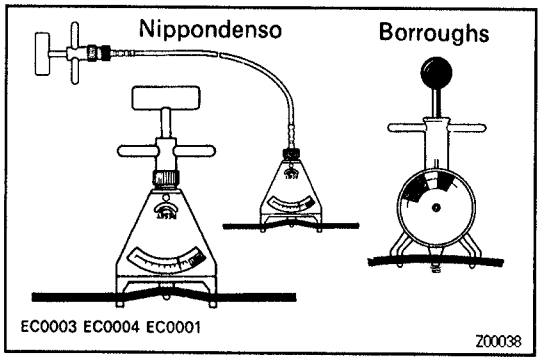

ON–VEHICLE INSPECTION

STEERING WHEEL FREEPLAY CHECK

SR18T–02

With the vehicle stopped and tires pointed straight ahead, rock the steering wheel gently back and forth with light finger pressure.
Freeplay should not exceed the maximum.

	Freeplay mm (in.)
Maximum	30 (1.18)

DRIVE BELT TENSION CHECK

SR18U–05

Using a belt tension gauge, check the tension.
Belt tension gauge:
Nippondenso BTG–20 (95506–00020) or
Borroughs No.BT–33–73F

	Drive belt tension lbf
New belt	135 – 180
Used belt	85 – 120

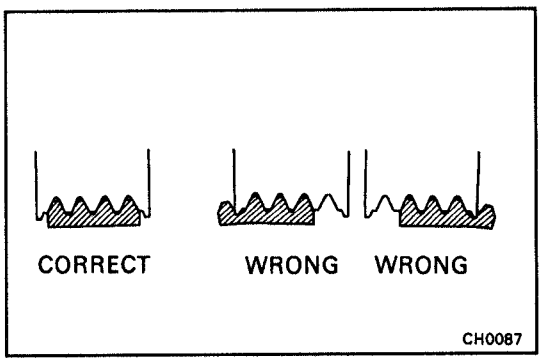

NOTICE: After installing the belt, check that it fits properly in the ribbed grooves.

HINT:

- "New belt" refers to a belt which has been less than 5 minutes on a running engine.
- "Used belt" refers to a belt which has been used on a running engine for 5 minutes or more.

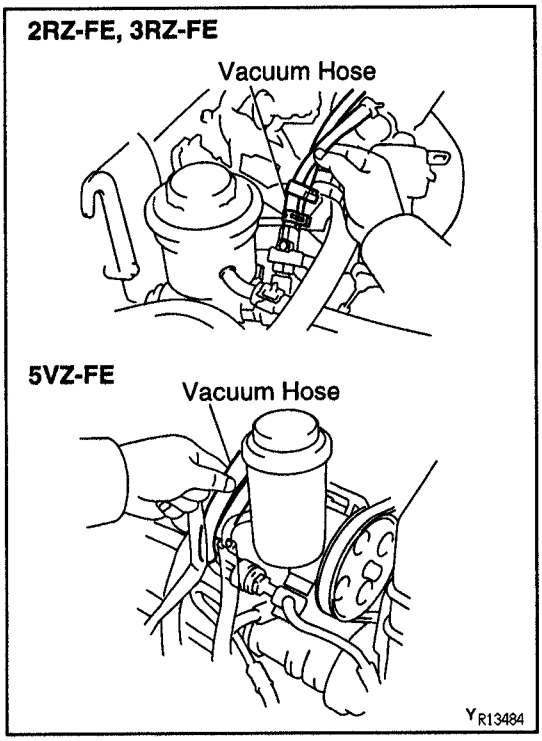

SR18V–04

IDLE–UP CHECK

1. **TURN AIR CONDITIONING SWITCH OFF**
2. **CHECK IDLE–UP**

(a) Start engine and run it at idle.
(b) Fully turn the steering wheel.
(c) Check that the engine rpm decreases when the vacuum hose of the air control valve is pinched.
(d) Check that the engine rpm increases when the hose is released.

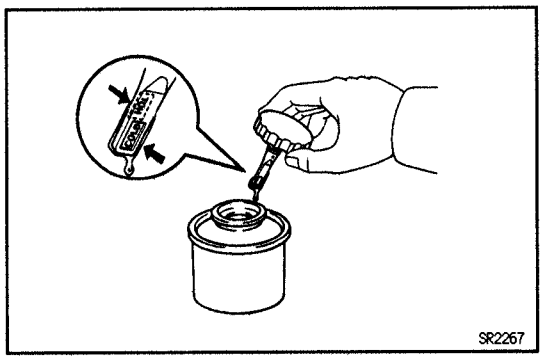

SR18W–06

FLUID LEVEL CHECK

1. **KEEP VEHICLE LEVEL**
2. **CHECK FLUID LEVEL**

With the engine stopped, check the fluid level in the oil reservoir.

If necessary, add fluid.

Fluid:

ATF DEXRON® II or III

HINT: Check that the fluid level is within the HOT LEVEL range on the reservoir cap dipstick. If the fluid is cold, check that it is within the COLD LEVEL range.

3. **BOOST FLUID TEMPERATURE**

(a) Start the engine and run it at idle.
(b) Turn the steering wheel from lock to lock several times to boost fluid temperature.

Fluid temperature:

80°C (176°F)

SR

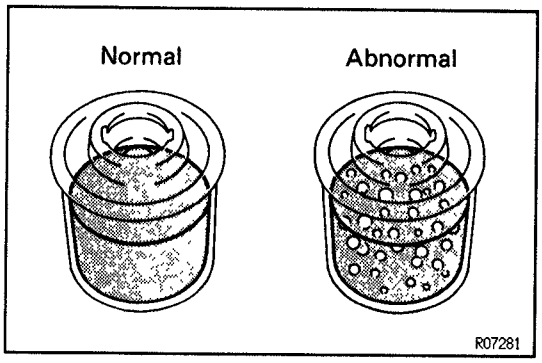

4. CHECK FOR FOAMING OR EMULSIFICATION

If there is foaming or emulsification, bleed power steering system.

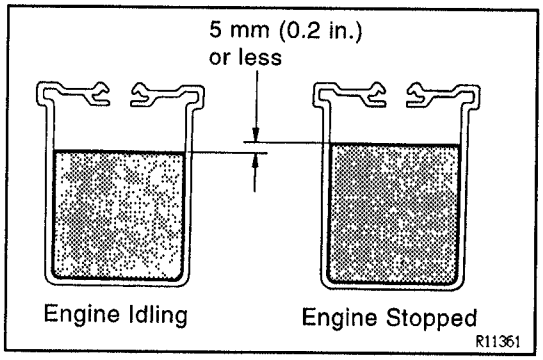

5. CHECK FLUID LEVEL RISE

(a) With the engine idling, measure the fluid level in the oil reservoir.

(b) Stop the engine.

(c) Wait a few minutes and remeasure the fluid level in the reservoir.

	Fluid level rise	mm (in.)
Maximum	5 (0.2)	

If a problem is found, bleed power steering system.

6. CHECK FLUID LEVEL

(See page SR–8)

POWER STEERING SYSTEM BLEEDING 08180Y–05

1. CHECK FLUID LEVEL

(See page SR–8)

2. JACK UP FRONT OF VEHICLE AND SUPPORT IT WITH STANDS

3. TURN STEERING WHEEL

With the engine stopped, turn the wheel slowly from lock to lock several times.

4. LOWER VEHICLE

5. START ENGINE

Run the engine at idle for a few minutes.

6. TURN STEERING WHEEL

(a) With the engine idling, turn the wheel to left or right full lock and keep it there for 2–3 seconds, then turn the wheel to the opposite full lock and keep it there for 2–3 seconds.

(b) Repeat (a) several times.

7. STOP ENGINE

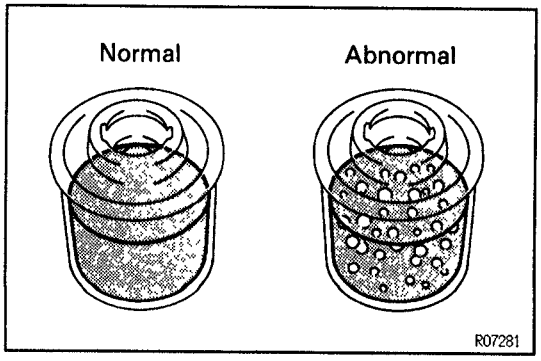

8. CHECK FOR FOAMING OR EMULSIFICATION

If the system has to be bled twice specifically because of foaming or emulsification, check for fluid leaks in the system.

9. CHECK FLUID LEVEL

(See page SR–8)

SR1M1–01

FLUID PRESSURE CHECK

1. **5VZ–FE Engine:**
   REMOVE AIR CLEANER ASSEMBLY
   Loosen the 3 bolts.
   (See page SR–43)
2. **CONNECT SST**

(a) Disconnect the pressure feed tube from the PS vane pump.
2RZ–FE, 3RZ–FE Engines: (See page SR–37)
5VZ–FE Engine: (See page SR–45)

(b) Connect the SST, as shown below.
SST 09640–10010 (09641–01010, 09641–01030, 09641–01060)
NOTICE: Check that the valve of the SST is in the open position.

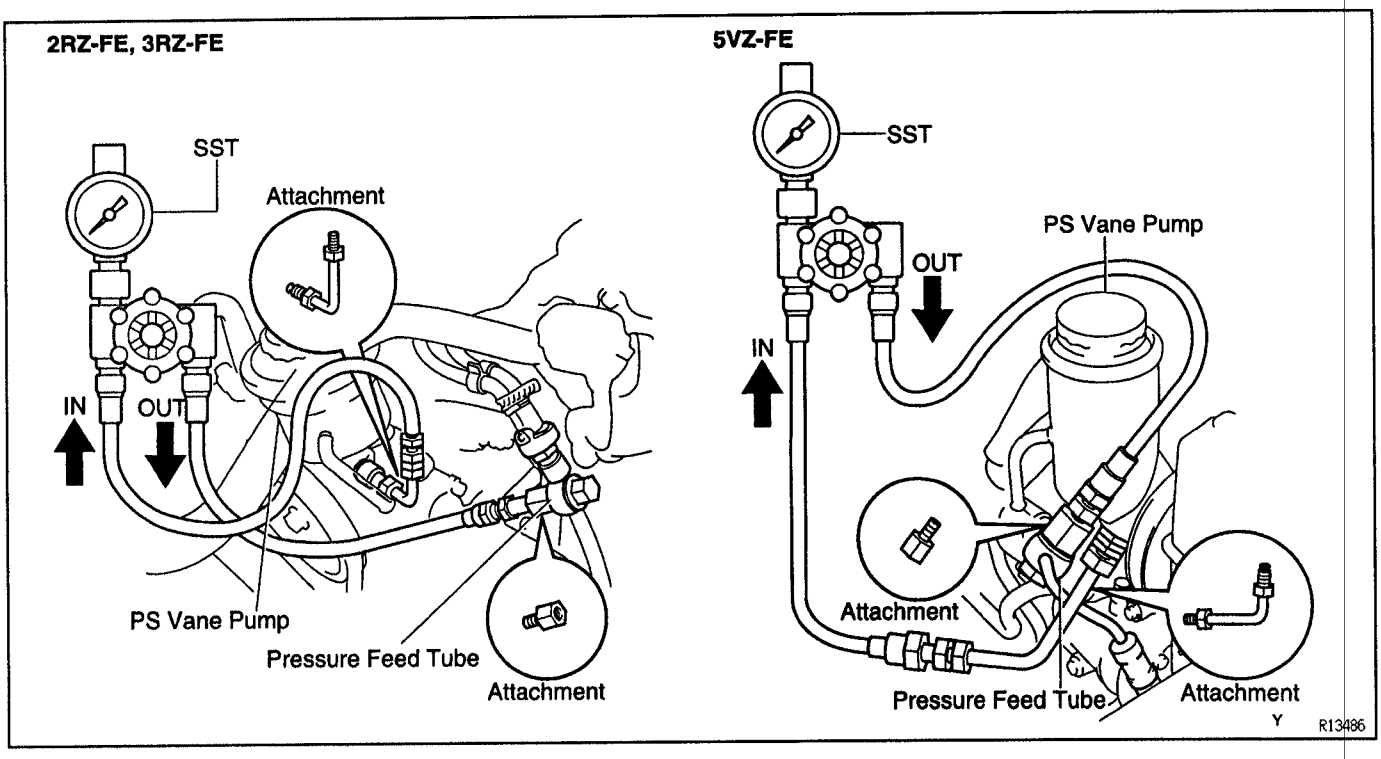

3. **BLEED POWER STEERING SYSTEM**
   (See page SR–9)
4. **BOOST FLUID TEMPERATURE**

(a) Start the engine and run it at idle.

(b) Turn the steering wheel from lock to lock several times to boost fluid temperature.
Fluid temperature:
80 °C (176 °F)

SR

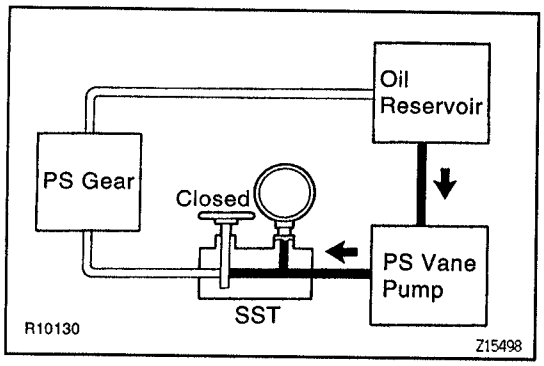

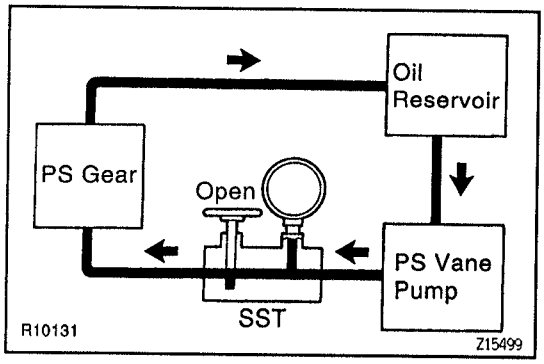

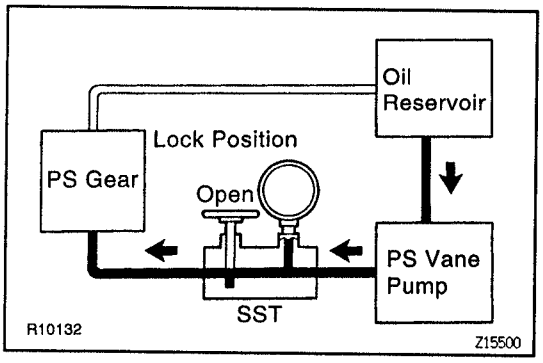

5. CHECK FLUID PRESSURE READING WITH VALVE CLOSED

With the engine idling, close the valve of the SST and observe the reading on the SST.

	Fluid pressure kPa (kgf/cm², psi)
Minimum	8,336 (85, 1,209)

NOTICE:

- **Do not keep the valve closed for more than 10 seconds.**
- **Do not let the fluid temperature become too high.**

6. CHECK FLUID PRESSURE READING WITH VALVE OPENED

(a) With the engine idling, open the valve fully.

(b) Measure the fluid pressure at engine speeds of 1,000 rpm and 3,000 rpm.

	Fluid pressure kPa (kgf/cm², psi)
Difference	490 (5, 71) or less

NOTICE: Do not turn the steering wheel.

7. CHECK PRESSURE READING WITH STEERING WHEEL TURNED TO FULL LOCK

With the engine idling and valve fully opened, turn the wheel to full lock.

	Fluid pressure kPa (kgf/cm², psi)
Minimum	8,336 (85, 1,209)

NOTICE:

- **Do not maintain lock position for more than 10 seconds.**
- **Do not let the fluid temperature become too high.**

8. DISCONNECT SST

(a) Disconnect the SST.

(b) Connect the pressure feed tube.

2RZ–FE, 3RZ–FE Engines: (See page SR–42)

5VZ–FE Engine: (See page SR–50)

9. BLEED POWER STEERING SYSTEM

(See page SR–9)

10. 5VZ–FE Engine:

INSTALL AIR CLEANER ASSEMBLY

Tighten the 3 bolts.

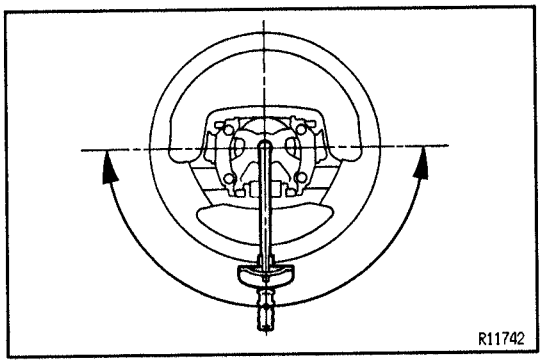

STEERING EFFORT MEASUREMENT

SR190–07

1. **CENTER STEERING WHEEL**
2. **MEASURE STEERING EFFORT**

(a) Remove the steering wheel pad.
(See page SR–16)

(b) Start the engine and run it at idle.

(c) Measure the steering effort in both directions.
Reference:
4.9 N·m (50 kgf·cm, 43 in.·lbf)
HINT: Be sure to consider the tire type, pressure and contact surface before making your diagnosis.

(d) Torque the steering wheel set nut.
Torque: 35 N·m (357 kgf·cm, 26 ft·lbf)

(e) Install the steering wheel pad.
(See page SR–24)

SR

NON–TILT STEERING COLUMN
COMPONENTS

SR1DB–02

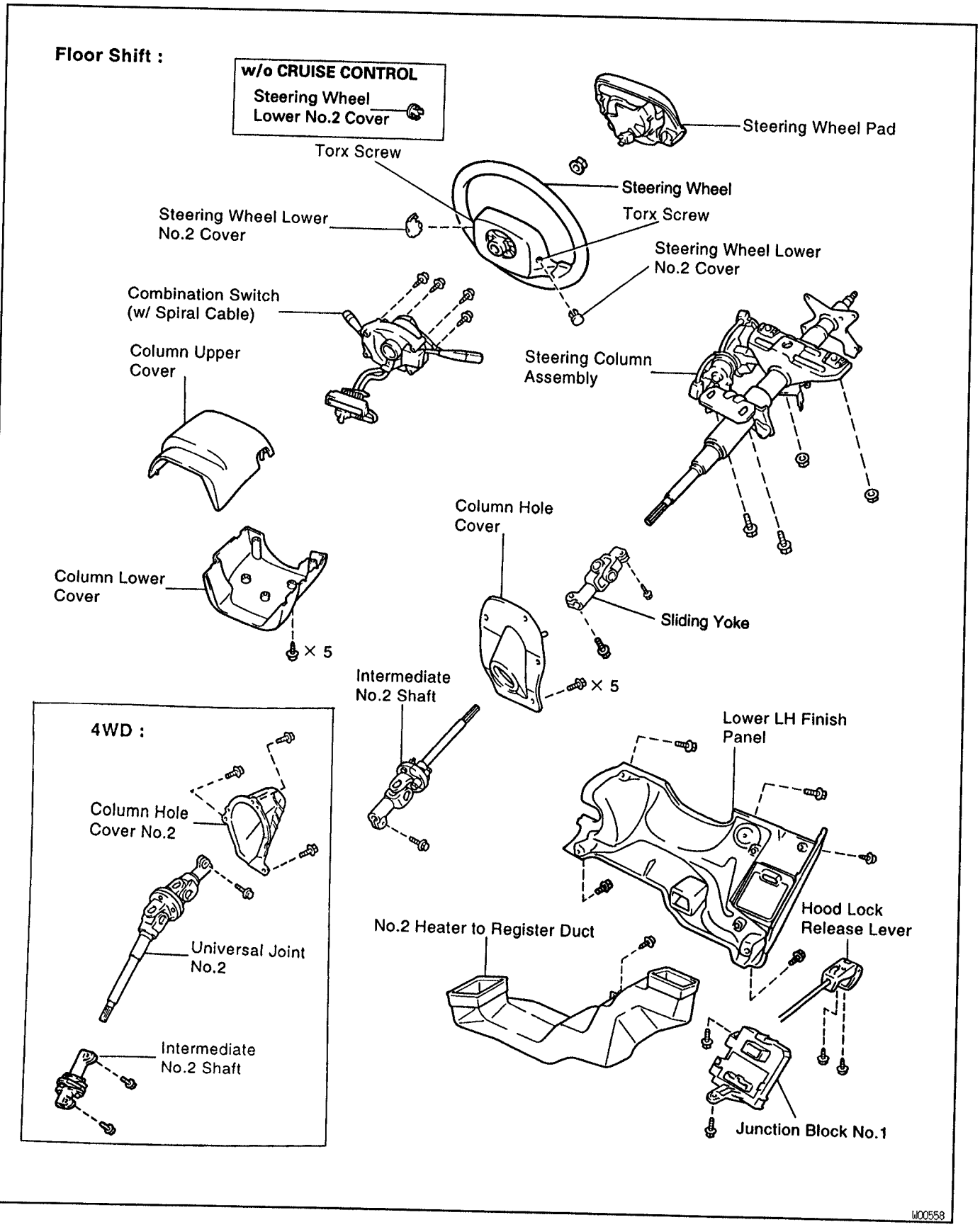

SR

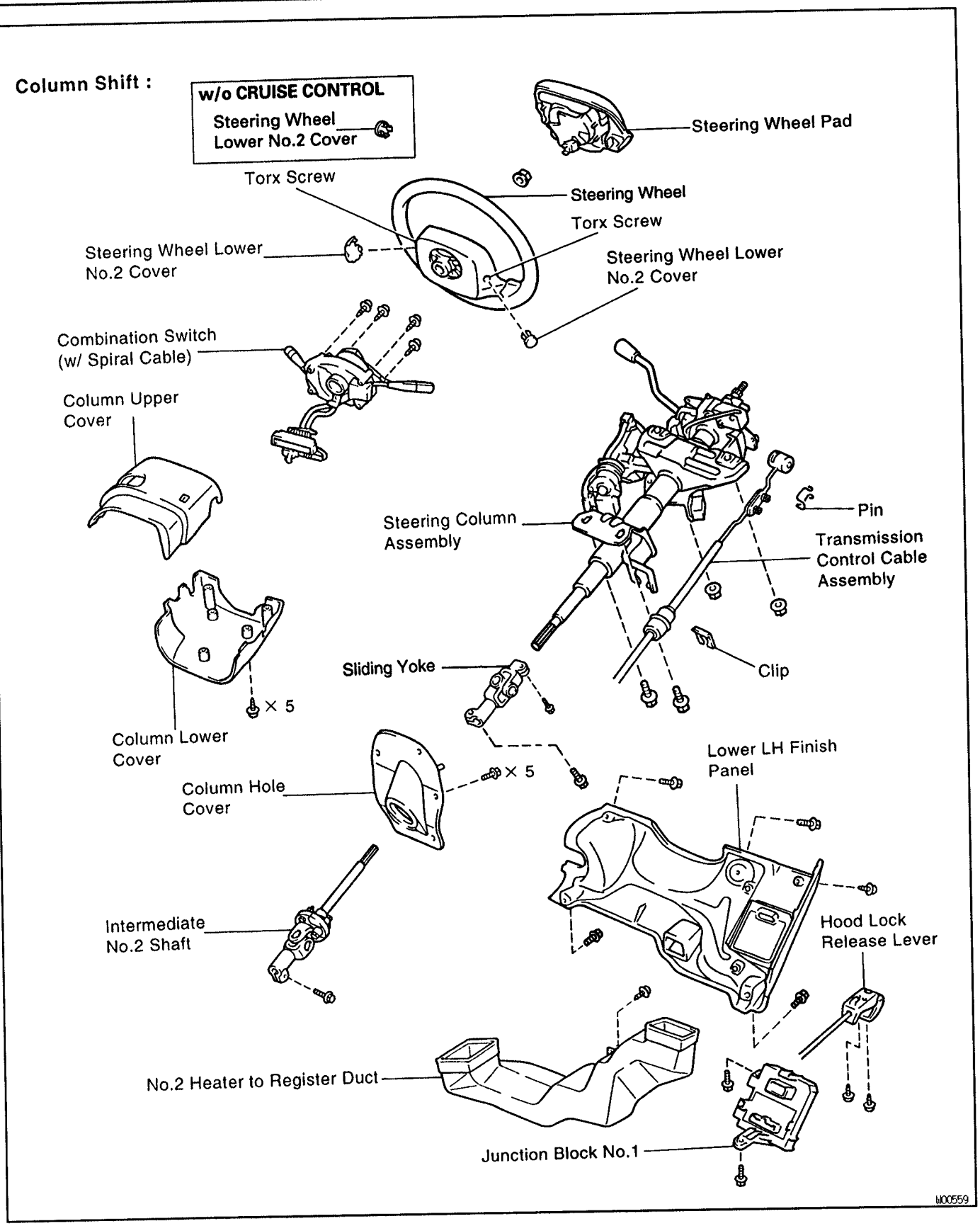
Column Shift :
w/o CRUISE CONTROL
Steering Wheel Lower No.2 Cover
Steering Wheel Pad
Torx Screw
Steering Wheel
Torx Screw
Steering Wheel Lower No.2 Cover
Steering Wheel Lower No.2 Cover
Combination Switch (w/ Spiral Cable)
Column Upper Cover
Steering Column Assembly
Pin
Transmission Control Cable Assembly
Clip
Sliding Yoke
× 5
Column Lower Cover
Column Hole Cover
× 5
Lower LH Finish Panel
Intermediate No.2 Shaft
Hood Lock Release Lever
No.2 Heater to Register Duct
Junction Block No.1
W00559

SR

COMPONENTS

SR1DC–02

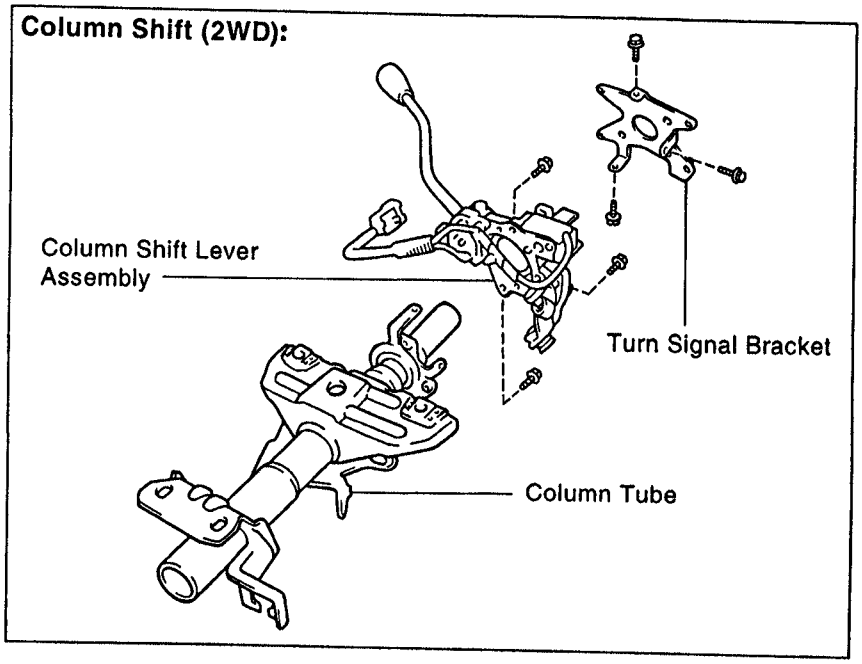

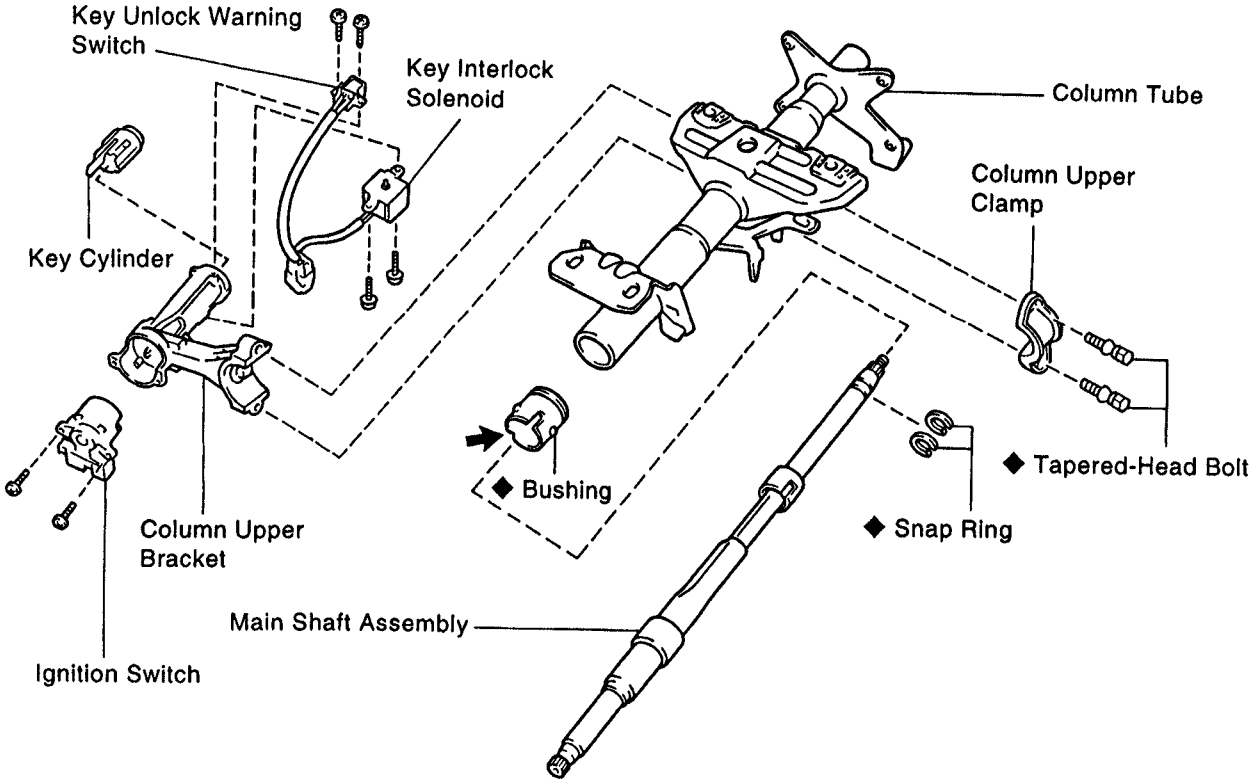

◆ Non-reusable part
⬅ Molybdenum disulphide lithium base grease

W00560

SR

SR1M2–01

STEERING COLUMN REMOVAL

1. REMOVE STEERING WHEEL PAD

NOTICE:

- **If the airbag connector is disconnected with the ignition switch at ON or ACC, DTCs will be recorded.**
- **Never use airbag parts from another vehicle. When replacing parts, replace with new parts.**

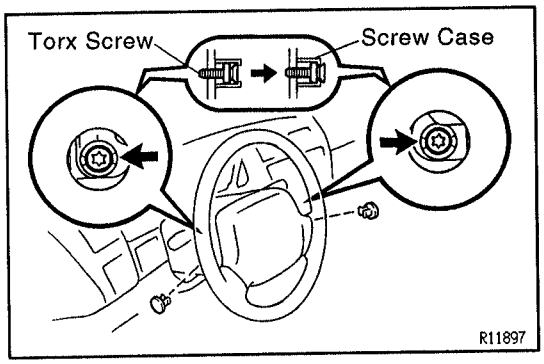

(a) Place the front wheels facing straight ahead.
(b) Remove the 2 steering wheel lower No.2 covers.
(c) Using a torx socket wrench, loosen the 2 torx screws.
HINT: Loosen the screw until the groove along the screw circumference catches on the screw case.

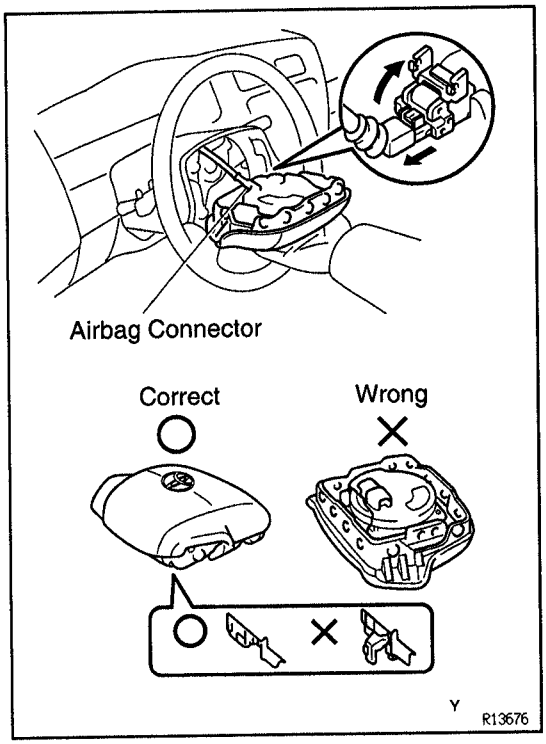

(d) Pull out the wheel pad from the steering wheel and disconnect the airbag connector.

CAUTION:

- **When storing the wheel pad, keep the upper surface of the pad facing upward.**
- **Never disassemble the wheel pad.**

NOTICE: When removing the wheel pad, take care not to pull the airbag wire harness.

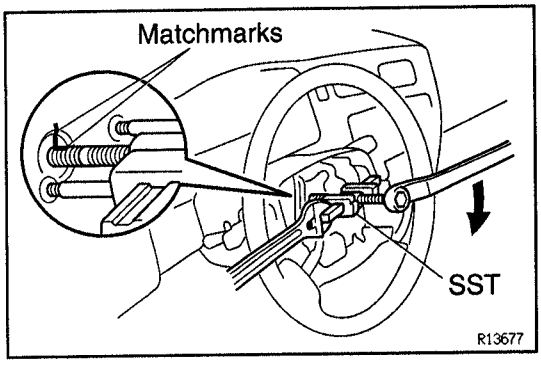

2. REMOVE STEERING WHEEL

(a) Disconnect the connector.
(b) Remove the steering wheel set nut.
(c) Place matchmarks on the steering wheel and main shaft assembly.
(d) Using SST, remove the wheel.
SST 09950–50010 (09951–05010, 09952–05010, 09953–05020, 09954–05020)

3. **REMOVE UPPER AND LOWER COLUMN COVERS**
Remove the 5 screws.
4. **REMOVE LOWER LH FINISH PANEL**
(a) Remove the 2 screws and disconnect the hood lock release lever from the panel.
(b) Remove the 4 panel set bolts and screw.
5. **REMOVE NO. 2 HEATER TO REGISTER DUCT**
Remove the screw.
6. **REMOVE COMBINATION SWITCH WITH SPIRAL CABLE**
(a) Disconnect the 2 connectors.
(b) Disconnect the airbag connector.
(c) Remove the 4 screws.
7. **REMOVE SPIRAL CABLE**
(See page BE–11)
NOTICE: Do not disassemble the cable or apply oil to it.
8. **DISCONNECT JUNCTION BLOCK NO.1**
Remove the 2 bolts and disconnect the junction block No. 1.

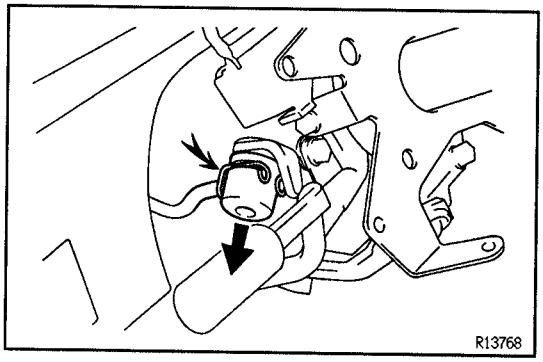

9. **COLUMN SHIFT (2WD): DISCONNECT TRANSMISSION CONTROL CABLE ASSEMBLY**
(b) Remove the pin and clip.
(c) Disconnect the cable assembly from the column shift lever assembly.

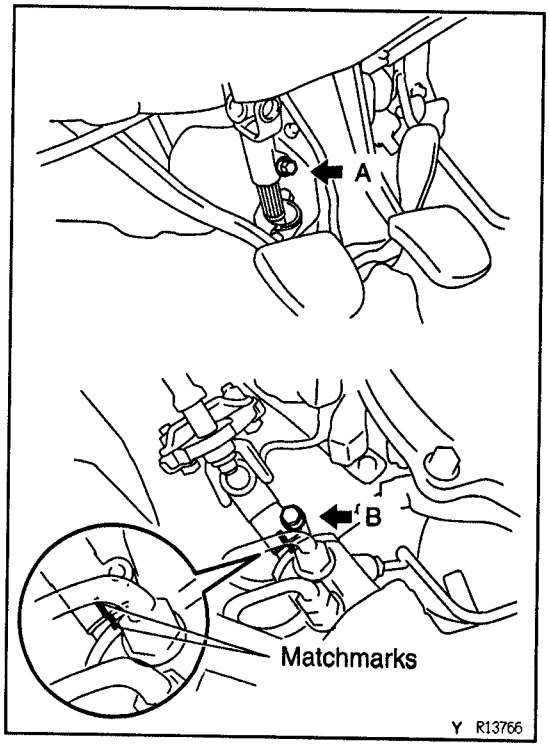

10. **2WD: REMOVE COLUMN HOLE COVER**
Remove the 5 bolts.
11. **2WD: DISCONNECT INTERMEDIATE NO. 2 SHAFT**
(a) Place matchmarks on the intermediate No. 2 shaft and control valve shaft.
(b) Loosen bolt A and remove bolt B.
12. **2WD: REMOVE INTERMEDIATE NO. 2 SHAFT**
Remove the bolt A.

SR

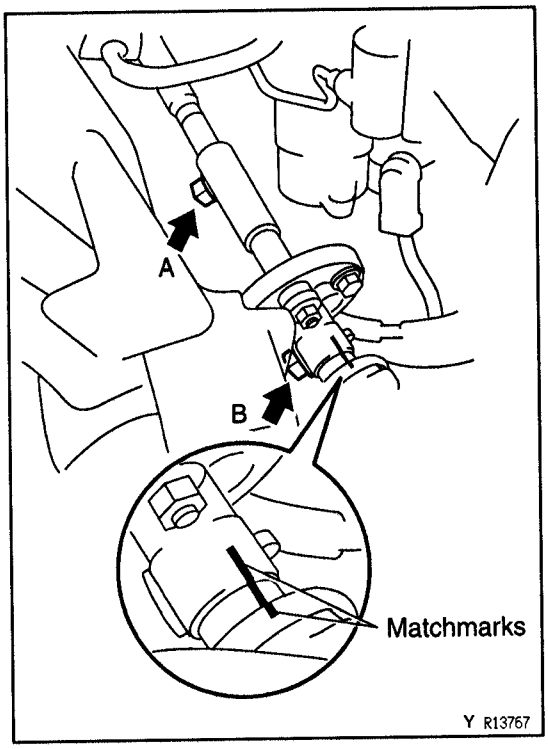

13. **4WD:**
REMOVE 3 COLUMN HOLE COVER NO. 2 SET BOLTS
14. **4WD:**
DISCONNECT INTERMEDIATE NO.2 SHAFT
(a) Place matchmarks on the intermediate No.2 shaft and control valve shaft.
(b) Loosen bolt A and remove bolt B.
15. **4WD:**
REMOVE INTERMEDIATE NO. 2 SHAFT
Remove the bolt A.
16. **REMOVE STEERING COLUMN ASSEMBLY**
(a) FLOOR SHIFT:
Disconnect the 2 connectors.
COLUMN SHIFT:
Disconnect the 3 connectors.
(b) Remove the 2 column assembly set bolts and nuts.

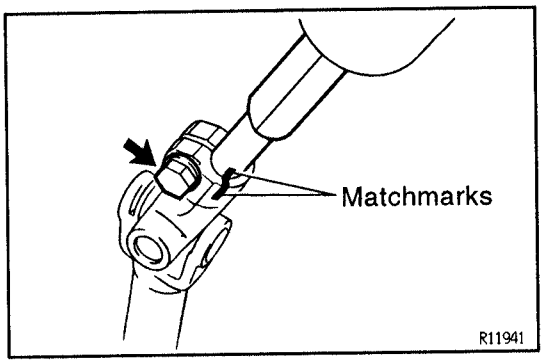

17. **2WD:**
REMOVE SLIDING YOKE
(a) Place matchmarks on the sliding yoke and main shaft assembly.
(b) Remove the bolt.

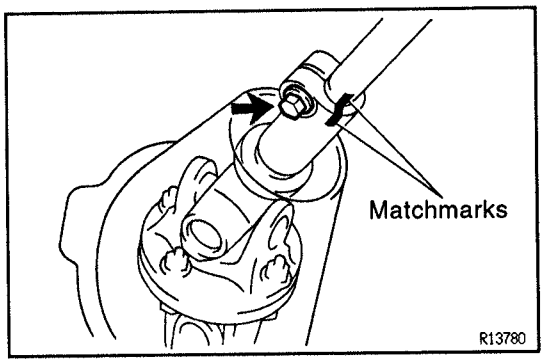

18. **4WD:**
REMOVE UNIVERSAL JOINT NO. 2
(a) Place matchmarks on the universal joint No.2 and main shaft assembly.
(b) Remove the bolt.
19. **4WD:**
REMOVE COLUMN HOLE COVER NO.2
Remove the cover No.2 from the universal joint No.2.

SR

NON–TILT STEERING COLUMN DISASSEMBLY

SR1M3–01

NOTICE: When using a vise, do not overtighten it.

1. REMOVE COLUMN UPPER BRACKET AND COLUMN UPPER CLAMP

(a) Using a centering punch, mark the center of the 2 tapered–head bolts.

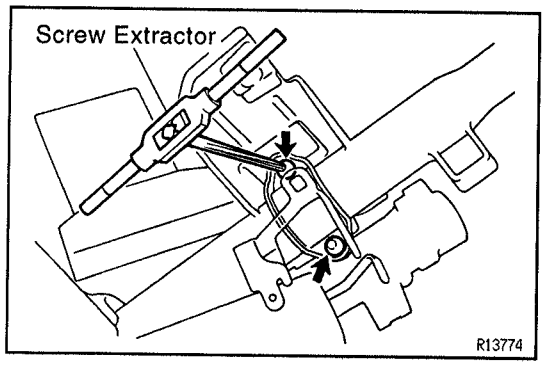

(b) Using a 3–4 mm (0.12–0.16 in.) drill, drill into the 2 bolts.

(c) Using a screw extractor, remove the 2 bolts.

2. REMOVE MAIN SHAFT ASSEMBLY

(a) Using snap ring pliers, remove the snap ring from the shaft assembly.

(b) Using a plastic hammer, tap out the shaft assembly from the column tube.

(c) Using snap ring pliers, remove the snap ring from the shaft assembly.

3. COLUMN SHIFT (2WD): REMOVE TURN SIGNAL BRACKET

Remove the 3 bolts.

4. COLUMN SHIFT (2WD): REMOVE COLUMN SHIFT LEVER ASSEMBLY

Remove the 3 bolts.

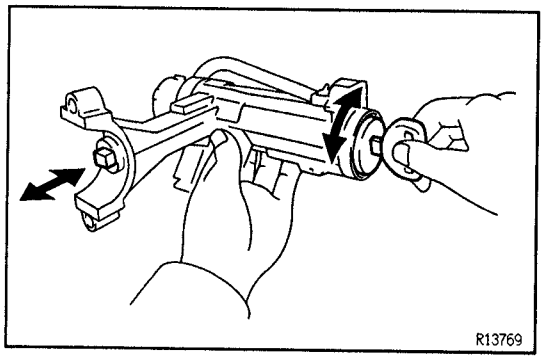

STEERING COLUMN INSPECTION AND REPLACEMENT

SR1MA–01

SR

1. INSPECT STEERING LOCK OPERATION

Check that the steering lock mechanism operates properly.

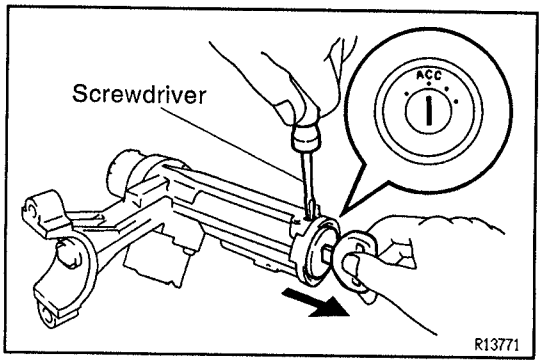

2. IF NECESSARY, REPLACE KEY CYLINDER

(a) Place the ignition key at the ACC position.

(b) Push down the stop pin with a screwdriver, and pull out the key cylinder.

(c) Install a new key cylinder.

HINT: Make sure the ignition key is at the ACC position.

3. **INSPECT IGNITION SWITCH**
(See page BE–4)
4. **IF NECESSARY, REPLACE IGNITION SWITCH**
(a) Remove the 2 screws.
(b) Install a new switch with the 2 screws.
5. **INSPECT KEY UNLOCK WARNING SWITCH**
(See page BE–5)
6. **M/T:**
IF NECESSARY, REPLACE KEY UNLOCK WARNING SWITCH
(a) Remove the 2 screws.
(b) Install a new switch with the 2 screws.
7. **A/T:**
INSPECT KEY INTERLOCK SOLENOID
A43D: (See page AT–31)
A340E,F: (See page AT–31)
8. **A/T:**
IF NECESSARY, REPLACE KEY UNLOCK WARNING SWITCH WITH KEY INTERLOCK SOLENOID
(a) Remove the 4 screws.
(b) Install a new switch and solenoid with the 4 screws.

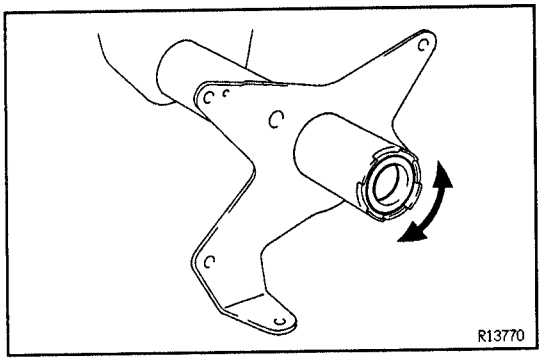

9. **NON–TILT STEERING COLUMN:**
INSPECT BEARING
Check the bearing rotation condition and check for abnormal noise.
If the bearing is worn or damaged, replace the column tube.

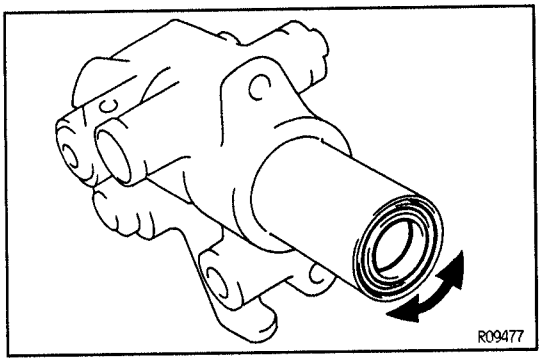

10. **TILT STEERING COLUMN:**
INSPECT BEARING
Check the bearing rotation condition and check for abnormal noise.
If the bearing is worn or damaged, replace the column upper tube.

SR

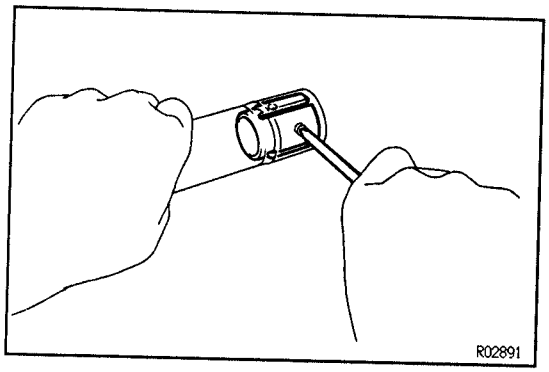

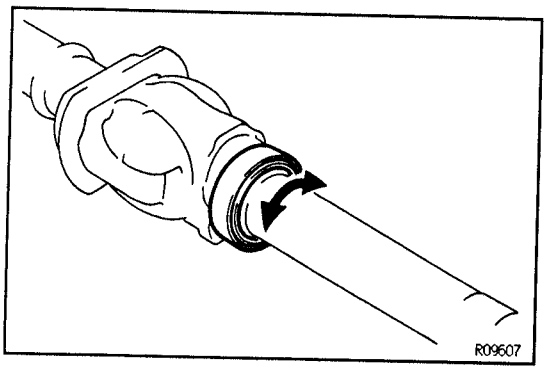

11. EXCEPT TILT STEERING COLUMN (NASTECH): IF NECESSARY, REPLACE BUSHING

(a) TILT STEERING COLUMN:
Using snap ring pliers, remove the snap ring.

(b) Using a screwdriver, depress the projections on the bushing to release the bushing, then remove the bushing from the column tube.

(c) Coat the inside of new bushing with molybdenum disulphide lithium base grease.

(d) Align the projections on the bushing with the holes in the column tube. Install the bushing until the projections are firmly engaged in the holes in the tube.

(e) TILT STEERING COLUMN:
Using snap ring pliers, install a new snap ring.

12. TILT STEERING COLUMN: INSPECT BEARING

Check the bearing rotation condition and check for abnormal noise.
If the bearing is worn or damaged, replace the bearing.

NON–TILT STEERING COLUMN ASSEMBLY

SR1DG–02

NOTICE: When using a vise, do not overtighten it.

1. COLUMN SHIFT (2WD): INSTALL COLUMN SHIFT LEVER ASSEMBLY

Torque the 3 bolts.
Torque: 8 N·m (82 kgf·cm, 71 in.·lbf)

2. COLUMN SHIFT (2WD): INSTALL TURN SIGNAL BRACKET

Torque the 3 bolts.
Torque: 2 N·m (20 kgf·cm, 17 in.·lbf)

3. INSTALL MAIN SHAFT ASSEMBLY

(a) Using snap ring pliers, install a new snap ring to the shaft assembly.

(b) Install the shaft assembly to the column tube.

(c) Using snap ring pliers, install a new snap ring to the shaft assembly.

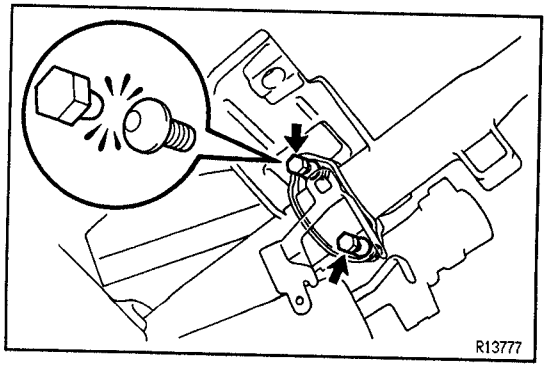

4. INSTALL COLUMN UPPER BRACKET AND COLUMN UPPER CLAMP

Tighten the 2 new tapered–head bolts until the bolts head break off.

SR

SR1MB–01

STEERING COLUMN INSTALLATION

1. **2WD:**
   INSTALL SLIDING YOKE
   (a) Align the matchmarks on the sliding yoke and main shaft assembly.
   (b) Torque the bolt.
   Torque: 36 N·m (367 kgf·cm, 27 ft·lbf)
2. **4WD:**
   INSTALL COLUMN HOLE COVER NO. 2
   Install the cover No. 2 to the universal joint No. 2.
3. **4WD:**
   INSTALL UNIVERSAL JOINT NO. 2
   (a) Align the matchmarks on the universal joint No. 2 and main shaft assembly.
   (b) Torque the bolt.
   Torque: 35 N·m (360 kgf·cm, 26 ft·lbf)
4. **INSTALL STEERING COLUMN ASSEMBLY**
   (a) Torque the 2 column assembly set bolts and nuts.
   Torque: 26 N·m (260 kgf·cm, 19 ft·lbf)
   (b) FLOOR SHIFT:
   Connect the 2 connectors.
   COLUMN SHIFT:
   Connect the 3 connectors.
5. **2WD:**
   INSTALL INTERMEDIATE NO. 2 SHAFT
   Temporarily tighten the bolt A.
6. **2WD:**
   CONNECT INTERMEDIATE NO. 2 SHAFT
   (a) Align the matchmarks on the intermediate No. 2 shaft and control valve shaft.
   (b) Torque the bolt B.
   Torque: 36 N·m (367 kgf·cm, 27 ft·lbf)
   (c) Torque the bolt A.
   Torque: 36 N·m (367 kgf·cm, 27 ft·lbf)
7. **2WD:**
   INSTALL COLUMN HOLE COVER
   Torque the 5 bolts.
   Torque: 8 N·m (82 kgf·cm, 71 in.·lbf)

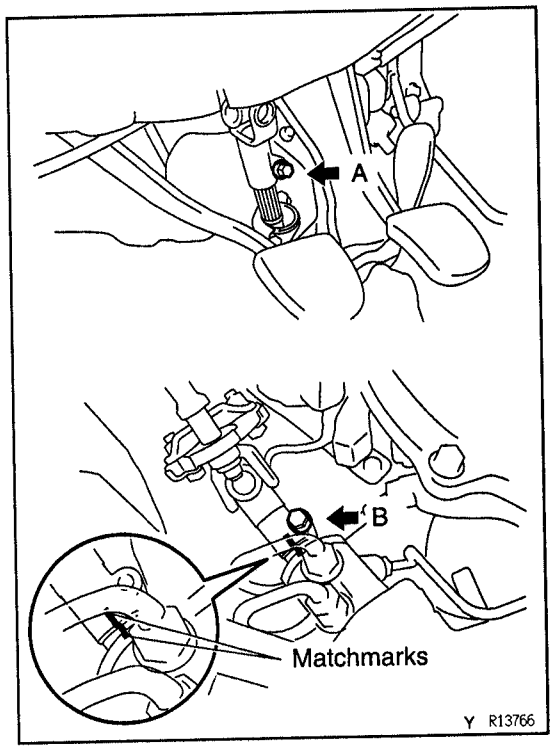

SR

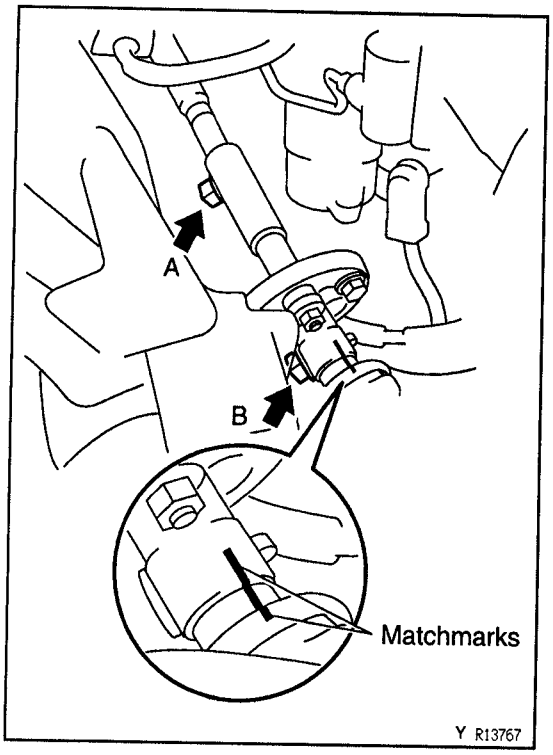

8. **4WD:**
INSTALL INTERMEDIATE NO. 2 SHAFT
Temporarily tighten the bolt A.
9. **4WD:**
CONNECT INTERMEDIATE NO. 2 SHAFT
(a) Align the matchmarks on the intermediate No. 2 shaft and control valve shaft.
(b) Torque the bolt B.
Torque: 35 N·m (360 kgf·cm, 26 ft·lbf)
(c) Torque the bolt A.
Torque: 35 N·m (360 kgf·cm, 26 ft·lbf)
10. **4WD:**
TORQUE 3 COLUMN HOLE COVER NO. 2 SET BOLTS
Torque the 3 bolts.
Torque: 8 N·m (82 kgf·cm, 71 in.·lbf)
11. **COLUMN SHIFT (2WD):**
CONNECT TRANSMISSION CONTROL CABLE ASSEMBLY
(a) Connect the cable assembly to column shift lever assembly.
(b) Install the pin and clip.
(c) Connect the junction block No. 1 with the 2 bolts.
12. **INSTALL SPIRAL CABLE**
(See page BE–11)
13. **INSTALL COMBINATION SWITCH WITH SPIRAL CABLE**
(a) Tighten the 4 screws.
(b) Connect the airbag connector.
(c) Connect the 2 connectors.
14. **INSTALL NO. 2 HEATER TO REGISTER DUCT**
Tighten the screw.
15. **INSTALL LOWER LH FINISH PANEL**
(a) Tighten the 4 panel set bolts and screw.
(b) Connect the hood lock release lever with the 2 screws.
16. **INSTALL UPPER AND LOWER COLUMN COVERS**
Tighten the 5 screws.

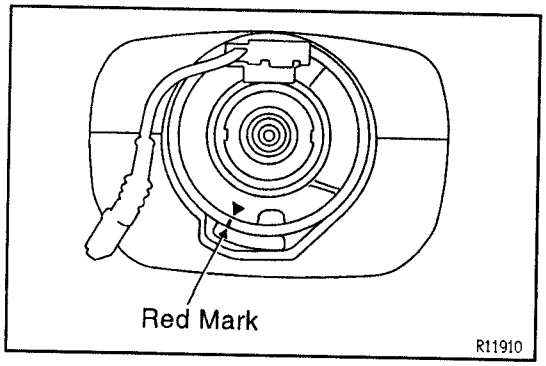

17. **CENTER SPIRAL CABLE**
(a) Check that the front wheels are facing straight ahead.
(b) Turn the cable counterclockwise by hand until it becomes harder to turn the cable.
(c) Then rotate the cable clockwise about 3 turns to align the red mark.
HINT: The cable will rotate about 3 turns to either left or right of the center.

18. INSTALL STEERING WHEEL

(a) Align the matchmarks on the wheel and main shaft assembly.

(b) Torque the wheel set nut.
Torque: 35 N·m (357 kgf·cm, 26 ft·lbf)

(c) Connect the connector.

19. INSTALL STEERING WHEEL PAD

NOTICE:

- **Make sure the wheel pad is installed to the specified torque.**
- **If the wheel pad has been dropped, or there are cracks, dents or other defects in the case or connector, replace the wheel pad with a new one.**
- **When installing the wheel pad, take care that the wirings do not interfere with other parts and are not pinched between other parts.**

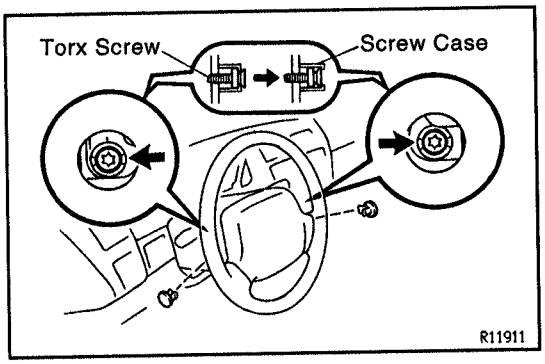

(a) Connect the airbag connector.

(b) Install the wheel pad after confirming that the circumference groove of the torx screw is caught on the screw case.
NOTICE:
COLUMN SHIFT (2WD): Take care that the spiral cable does not touch the dinamic damper of the steering wheel.

(c) Using a torx socket wrench, torque the 2 screws.
Torque: 9.0 N·m (90 kgf·cm, 78 in.·lbf)

(d) Install the 2 steering wheel lower No.2 covers.

20. CHECK STEERING WHEEL CENTER POINT

SR

TILT STEERING COLUMN
COMPONENTS

SR1DJ-02

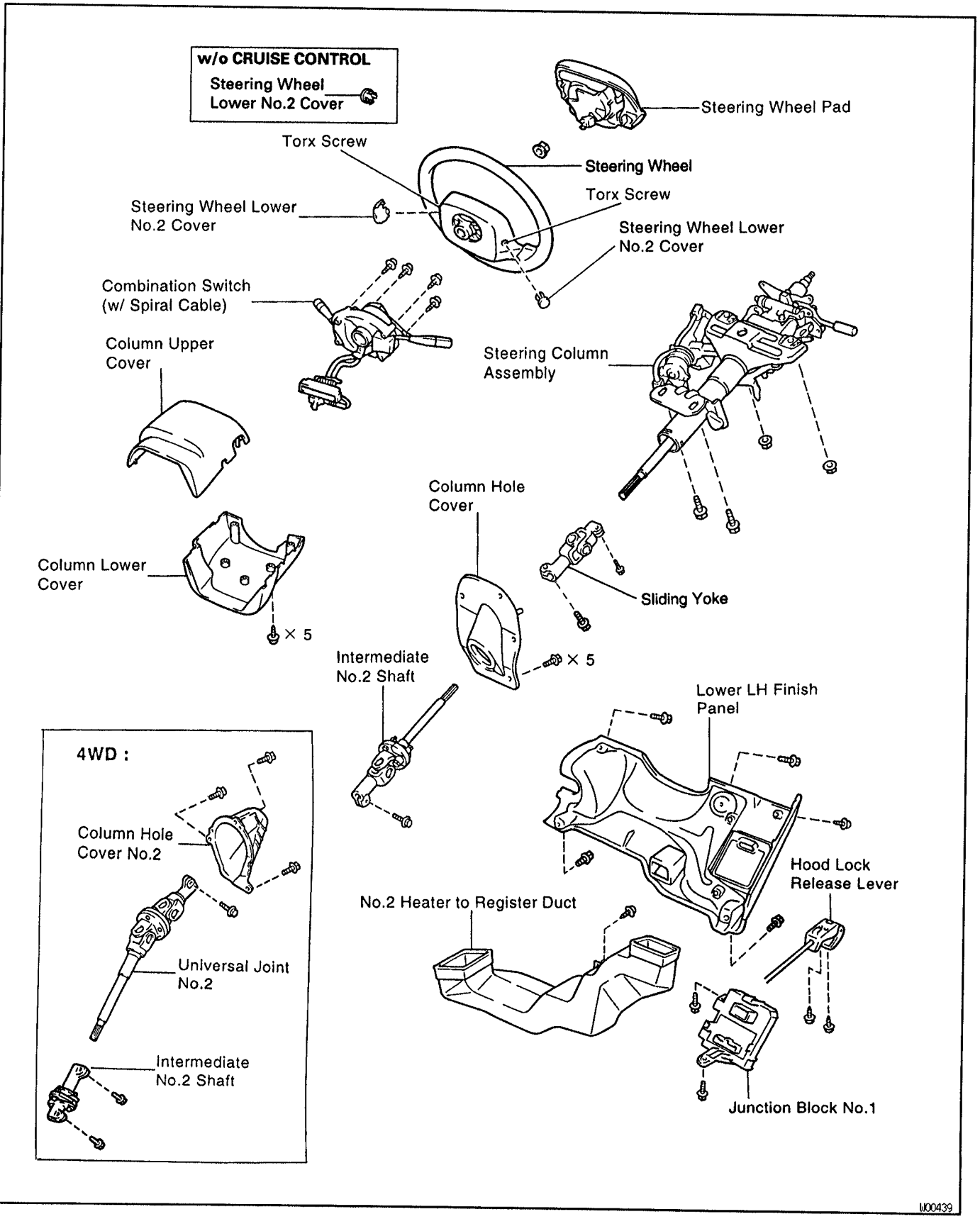

SR

SR1DK-02

COMPONENTS

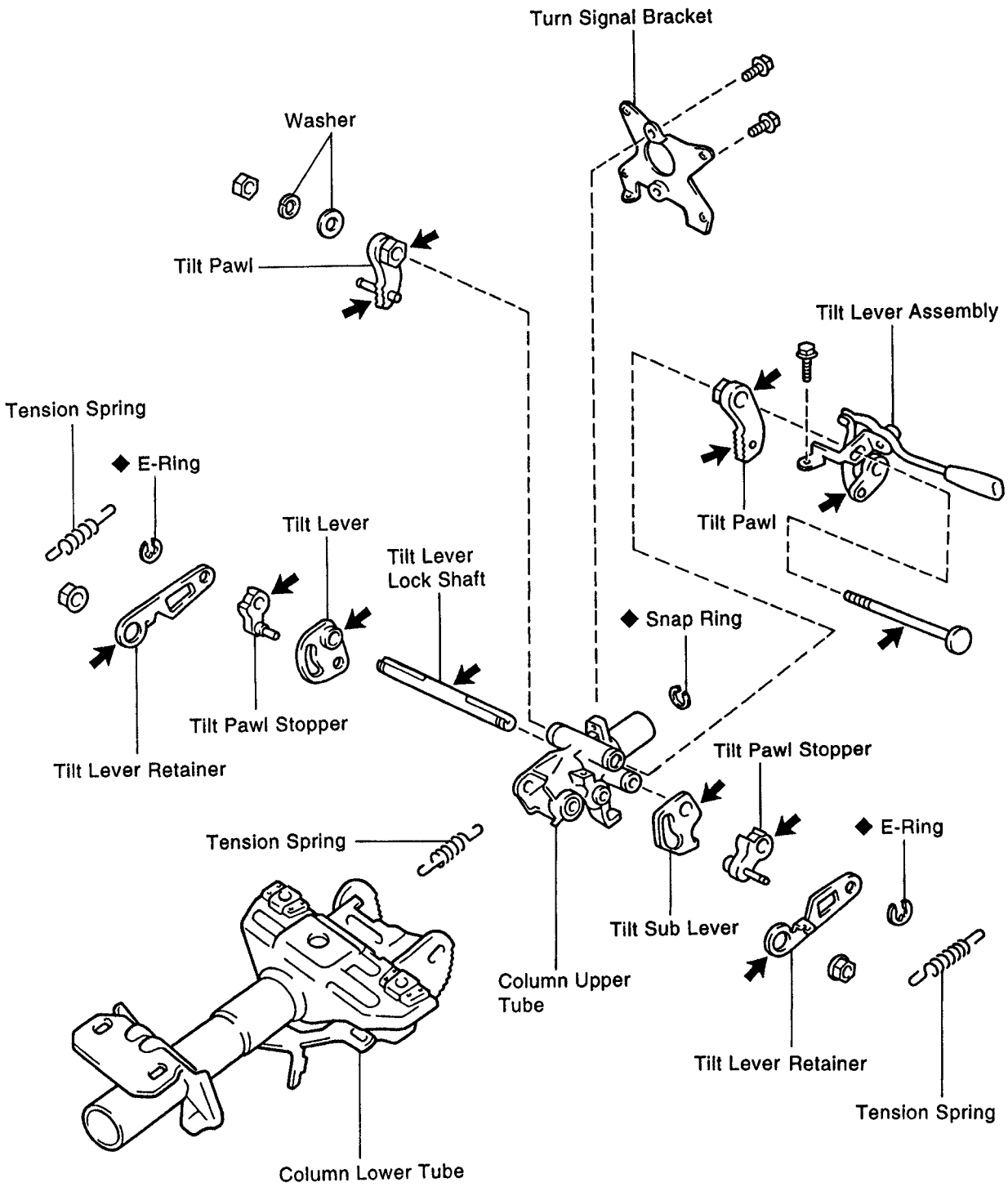

◆ Non-reusable part
⬅ Molybdenum disulphide lithium base grease

R13877

SR

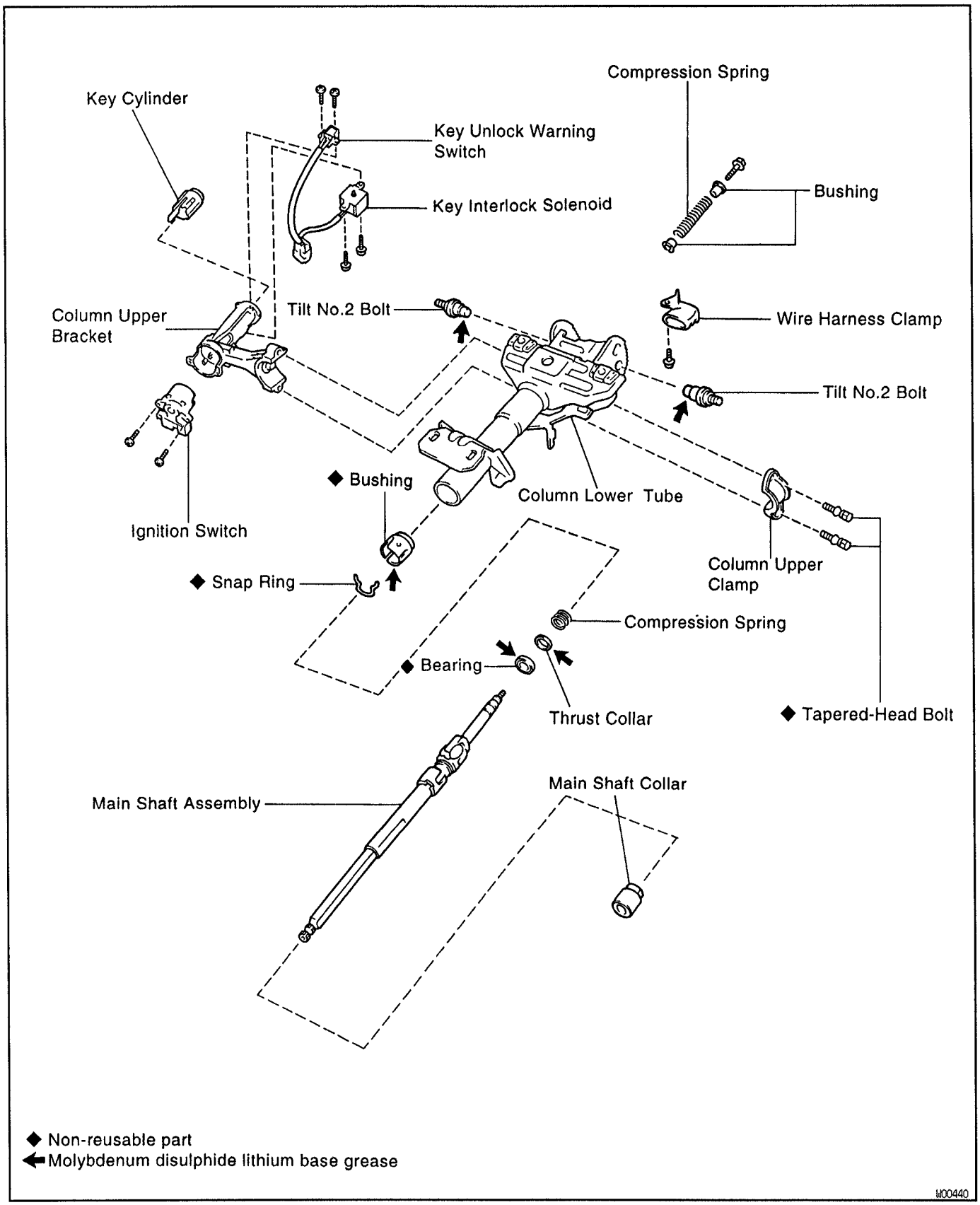
Compression Spring
Key Cylinder
Key Unlock Warning Switch
Key Interlock Solenoid
Bushing
Column Upper Bracket
Tilt No.2 Bolt
Wire Harness Clamp
Tilt No.2 Bolt
◆ Bushing
Column Lower Tube
Ignition Switch
Column Upper Clamp
◆ Snap Ring
Compression Spring
◆ Bearing
Thrust Collar
◆ Tapered-Head Bolt
Main Shaft Assembly
Main Shaft Collar
◆ Non-reusable part
Molybdenum disulphide lithium base grease
W00440

SR

TILT STEERING COLUMN REMOVAL (See page SR–16)

SR1DL-01

TILT STEERING COLUMN DISASSEMBLY

SR1DM-02

NOTICE: When using a vise, do not overtighten it.

1. **REMOVE WIRE HARNESS CLAMP**
   Remove the screw.
2. **REMOVE COLUMN UPPER BRACKET AND COLUMN UPPER CLAMP**
   (See page SR–19)
3. **REMOVE 3 TENSION SPRINGS**
4. **REMOVE TURN SIGNAL BRACKET**
   Remove the 2 bolts.
5. **REMOVE COMPRESSION SPRING**

(a) Remove the bolt with the spring.
(b) Remove the 2 bushings from the spring.

6. **REMOVE 2 TILT LEVER RETAINERS**

(a) Remove the E–ring from the tilt lever lock shaft.
(b) Remove the nut and retainer.

7. **REMOVE 2 TILT PAWL STOPPERS**
8. **REMOVE 2 TILT PAWLS**

(a) Remove the tilt lever assembly set bolt.
(b) Remove the nut and bolt.
(c) Remove the 2 washers.

9. **REMOVE TILT SUB LEVER AND TILT LEVER**
10. **REMOVE TILT LEVER ASSEMBLY**
11. **REMOVE TILT LEVER LOCK SHAFT**
12. **REMOVE COLUMN UPPER TUBE WITH MAIN SHAFT ASSEMBLY**

(a) Set SST, the nut (10 mm nominal diameter, 1.25 mm pitch), plate washer (36 mm outer diameter) and bolt (10 mm nominal diameter, 1.25 mm pitch, 50 mm length), as shown in the illustration.
SST 09910–00015 (09911–00011, 09912–00010)
Reference
Nut: 90170–10004
Plate washer: 90201–10201
Bolt: 91111–51050

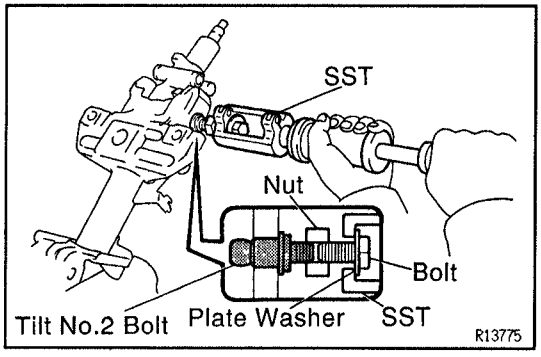

(b) Remove the 2 tilt No.2 bolts by using the sliding hammer on SST.
(c) Remove the upper tube with the shaft assembly from the lower tube.
(d) Remove the main shaft collar from the shaft assembly.

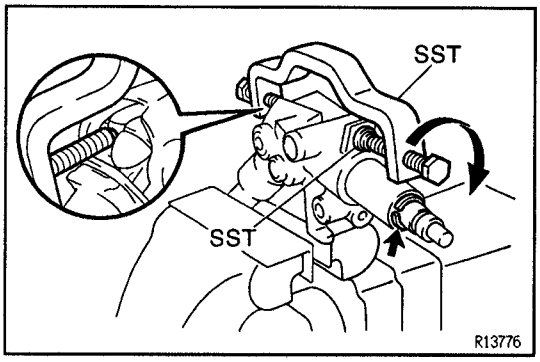

13. REMOVE MAIN SHAFT ASSEMBLY

(a) Using SST, compress the compression spring.
SST 09950–40010 (09957–04010, 09958–04010)
NOTICE: Do not bend the universal joint of the main shaft more than 20°.

(b) Using snap ring pliers, remove the snap ring.

(c) Remove the main shaft from the column upper tube.

(d) Remove the compression spring and thrust collar.

TILT STEERING COLUMN INSPECTION AND REPLACEMENT (See page SR–19)

SR1DN-01

TILT STEERING COLUMN ASSEMBLY

SR1MC-01

NOTICE: When using a vise, do not overtighten it.

1. COAT WITH MOLYBDENUM DISULPHIDE LITHIUM BASE GREASE
(See pages SR–26 and 27)

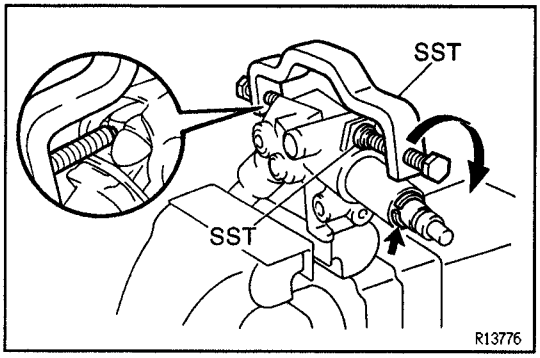

2. INSTALL MAIN SHAFT ASSEMBLY

(a) Install the thrust collar and compression spring to the main shaft.

(b) Install the main shaft into the column upper tube.

(c) Using SST, compress the compression spring.
SST 09950–40010 (09957–04010, 09958–04010)
NOTICE: Do not bend the universal joint of the main shaft more than 20°.

(d) Using snap ring pliers, install a new snap ring.

3. SELECT 2 TILT NO.2 BOLTS

Select the bolt with the hollow–tipped thread end when the column upper tube mark is 1, and select the bolt with the plain thread end when the mark is 2.
NOTICE: Select the bolt type to match each number marked in the squares on the upper tube.

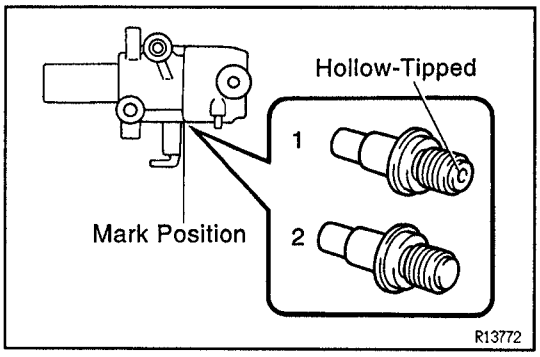

4. INSTALL COLUMN UPPER TUBE WITH MAIN SHAFT ASSEMBLY

(a) Install the main shaft collar to the main shaft.

(b) Install the upper tube with the main shaft assembly to the column lower tube.

(c) Using a plastic hammer, drive in the 2 tilt No.2 bolts.

(d) Check that the upper tube turns smoothly.

5. INSTALL TILT LEVER LOCK SHAFT

6. INSTALL TILT LEVER ASSEMBLY
Temporarily tighten the bolt.

7. INSTALL TILT SUB LEVER AND TILT LEVER

SR

8. INSTALL 2 TILT PAWLS

(a) Install the pawl to the column upper tube and temporarily install the 2 washers with the bolt and nut.
HINT: Install the pawl pin into the long hole of the tilt lever/ tilt sub lever.

(b) Torque the tilt lever assembly set bolt.
Torque: 2 N·m (20 kgf·cm, 17 in.·lbf)

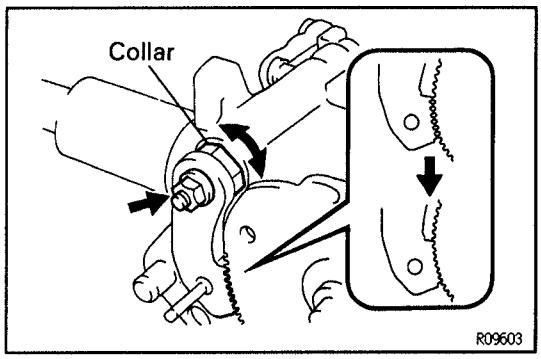

9. ENGAGE AND ADJUST 2 TILT PAWLS

(a) Engage the tilt sub lever side pawl to the center of the ratchet.

(b) While turning the tilt lever side collar, engage the tilt lever side pawl to the ratchet completely.

(c) Torque the nut.
Torque: 6 N·m (61 kgf·cm, 53 in.·lbf)

(d) Check that the pawls rotate smoothly.

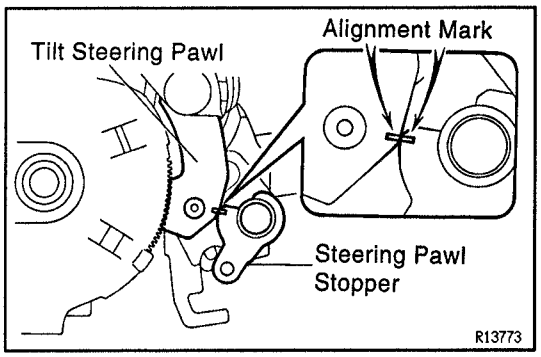

10. SELECT 2 TILT PAWL STOPPERS

(a) With the tilt pawl and ratchet engaged, install the pawl stopper.

(b) Check that the alignment marks on the stopper and pawl align when the stopper is lightly rotated to the pawl side.

(c) If the alignment marks do not align, select pawl stopper according to the following table.

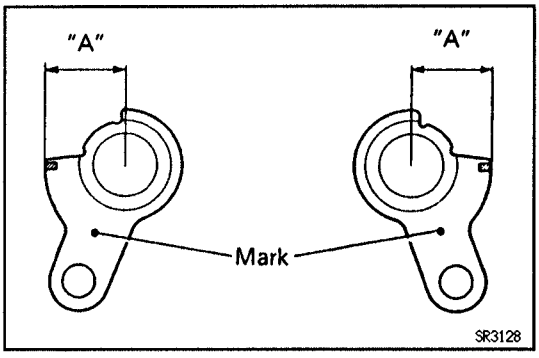

Tilt lever side	Tilt sub lever side	Dimension "A" mm (in.)
11	A	12.65–12.75 (0.4980–0.5020)
12	B	12.55–12.65 (0.4941–0.4980)
13	C	12.45–12.55 (0.4902–0.4941)
14	D	12.35–12.45 (0.4862–0.4902)
15	E	12.25–12.35 (0.4823–0.4862)

(d) After selecting the stoppers, check that on both sides the pawl and ratchet are fully engaged.

SR

11. INSTALL 2 TILT PAWL STOPPERS

12. INSTALL 2 TILT LEVER RETAINERS

(a) Install the tilt lever retainer and torque the nut.
Torque: 15 N·m (153 kgf·cm, 11 ft·lbf)

(b) Install a new E–ring.

13. INSTALL COMPRESSION SPRING

(a) Install the 2 bushings to the compression spring.

(b) Install the spring with the bolt.
Torque: 8 N·m (82 kgf·cm, 71 in.·lbf)

14. INSTALL TURN SIGNAL BRACKET
Torque the 2 bolts.
Torque: 5.7 N·m (58 kgf·cm, 51 in.·lbf)

15. INSTALL 3 TENSION SPRINGS

16. INSTALL COLUMN UPPER BRACKET AND COLUMN UPPER CLAMP
(See page SR–21)

17. INSTALL WIRE HARNESS CLAMP
Tighten the screw.

18. CHECK TILT STEERING OPERATION

(a) Check that there is no axial play at the end of the main shaft.

(b) With the main shaft in the neutral position, pull the tilt lever and check that the main shaft rises to the uppermost position.

(c) Lower the main shaft, and check that it locks in the lowermost position.

TILT STEERING COLUMN INSTALLATION SR1DQ–01

(See page SR–22)

SR

TILT STEERING COLUMN (NASTECH)

COMPONENTS

SR1DR-02

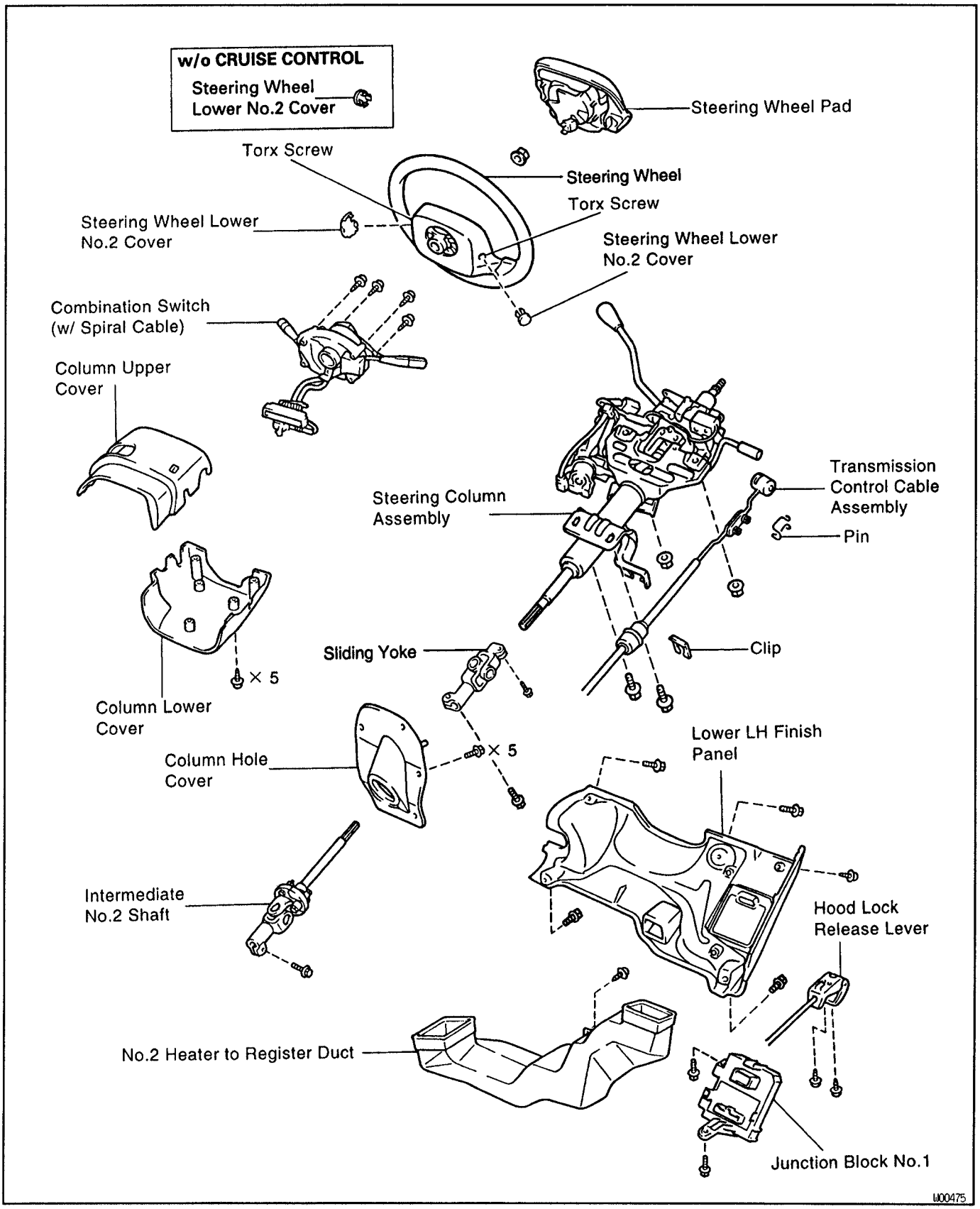

SR

SR1D6-02

COMPONENTS

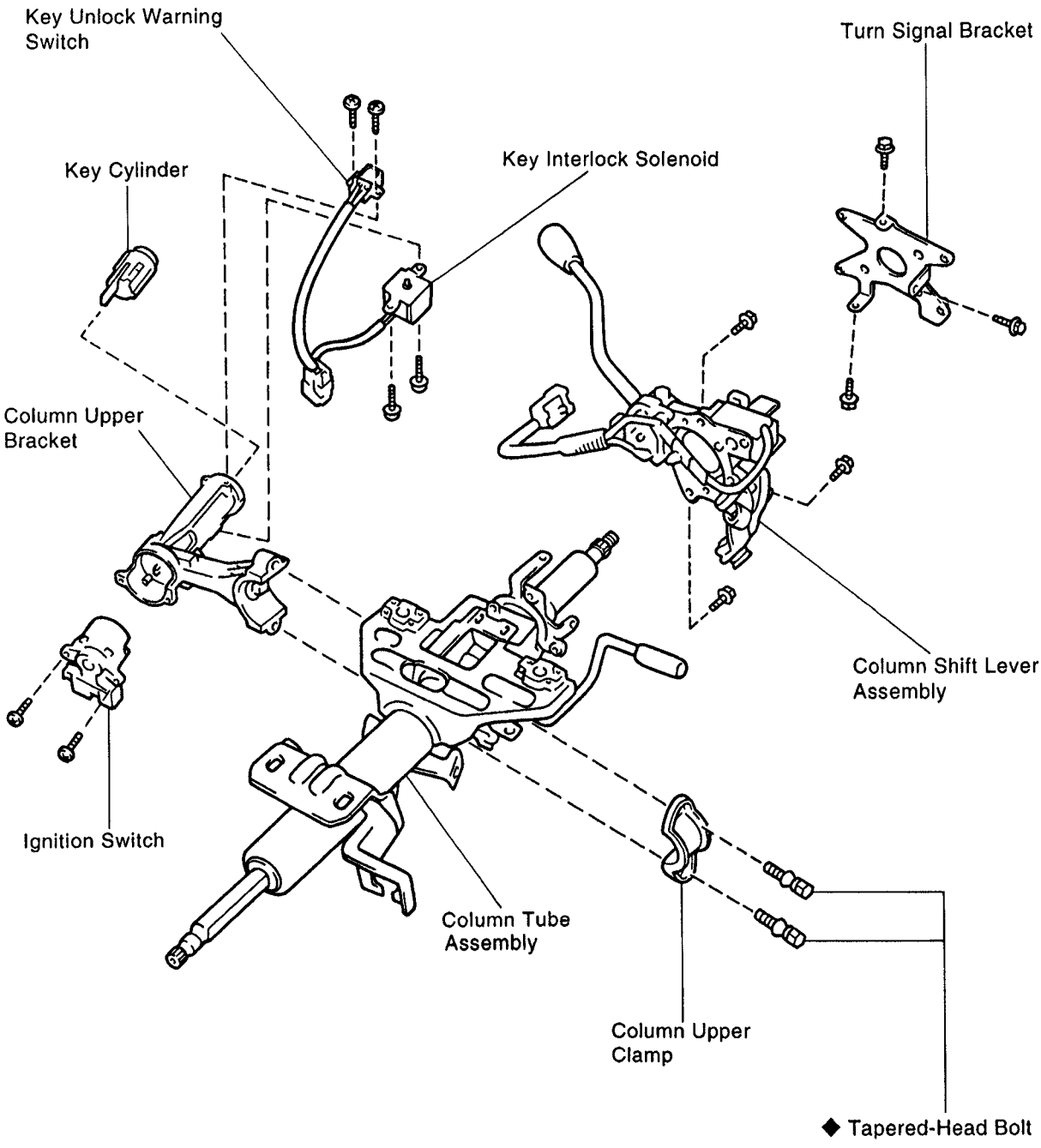

◆ Non-reusable part

W00443

SR

TILT STEERING COLUMN REMOVAL SR1DT-01

(See page SR–16)

TILT STEERING COLUMN DISASSEMBLY SR1DU-02

NOTICE:

- **Do not disassemble the column tube assembly.**
- **When using a vise, do not overtighten it.**

1. **REMOVE COLUMN UPPER BRACKET AND COLUMN UPPER CLAMP**
   (See page SR–19)
2. **REMOVE TURN SIGNAL BRACKET**
   Remove the 3 bolts.
3. **REMOVE COLUMN SHIFT LEVER ASSEMBLY**
   Remove the 3 bolts.

TILT STEERING COLUMN INSPECTION AND REPLACEMENT SR1DV-01

(See page SR–19)

TILT STEERING COLUMN ASSEMBLY SR1DW-02

NOTICE: When using a vise, do not overtighten it.

1. **INSTALL COLUMN SHIFT LEVER ASSEMBLY**
   Torque the 3 bolts.
   Torque: 9.3 N·m (95 kgf·cm, 83 in.·lbf)
2. **INSTALL TURN SIGNAL BRACKET**
   Torque the 3 bolts.
   Torque: 3.4 N·m (35 kgf·cm, 31 in.·lbf)
3. **INSTALL COLUMN UPPER BRACKET AND COLUMN UPPER CLAMP**
   (See page SR–21)

TILT STEERING COLUMN INSTALLATION SR1DX-01

(See page SR–22)

SR

POWER STEERING VANE PUMP (2RZ–FE, 3RZ–FE)

COMPONENTS

SR19E–02

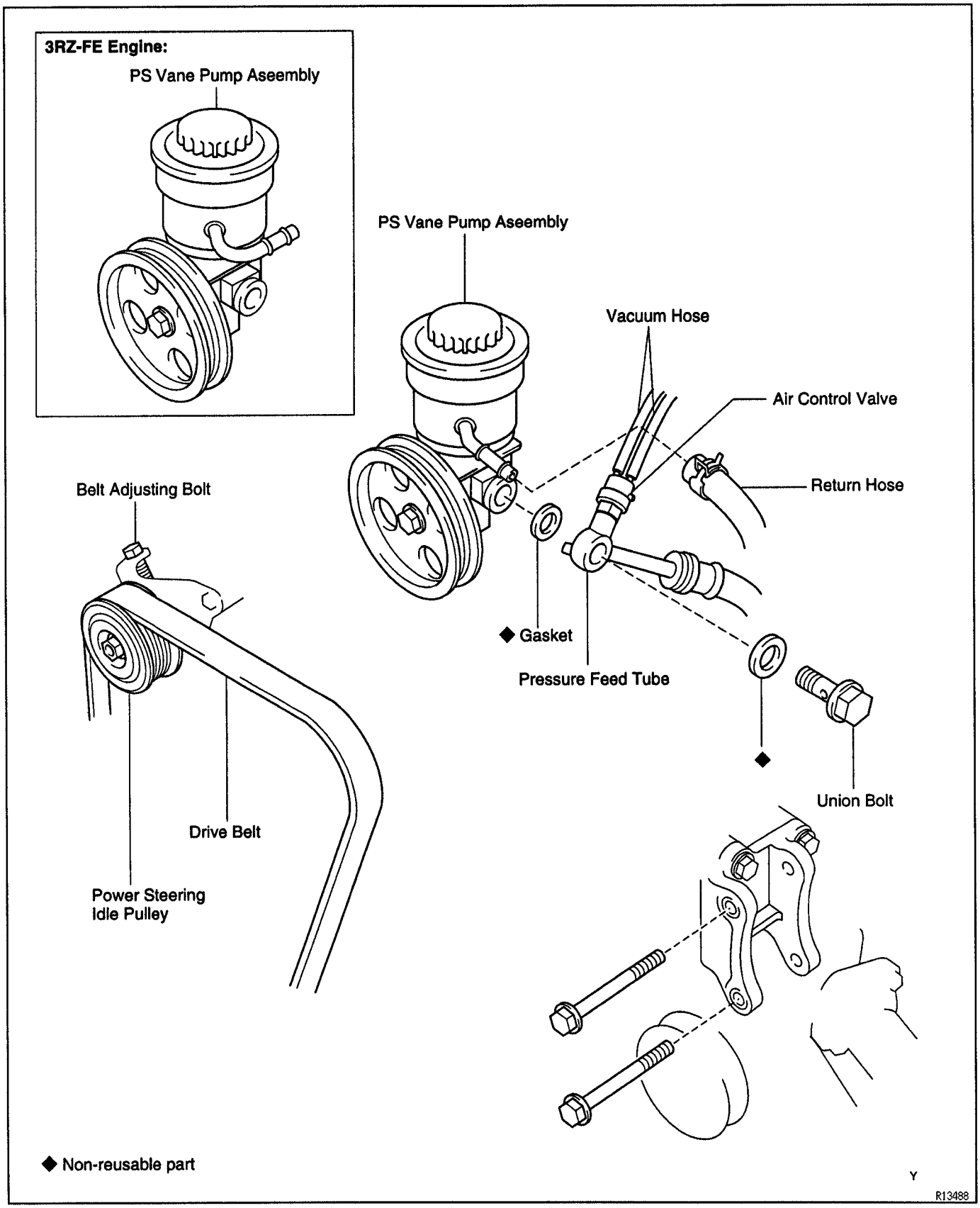

SR

COMPONENTS

SR19F–04

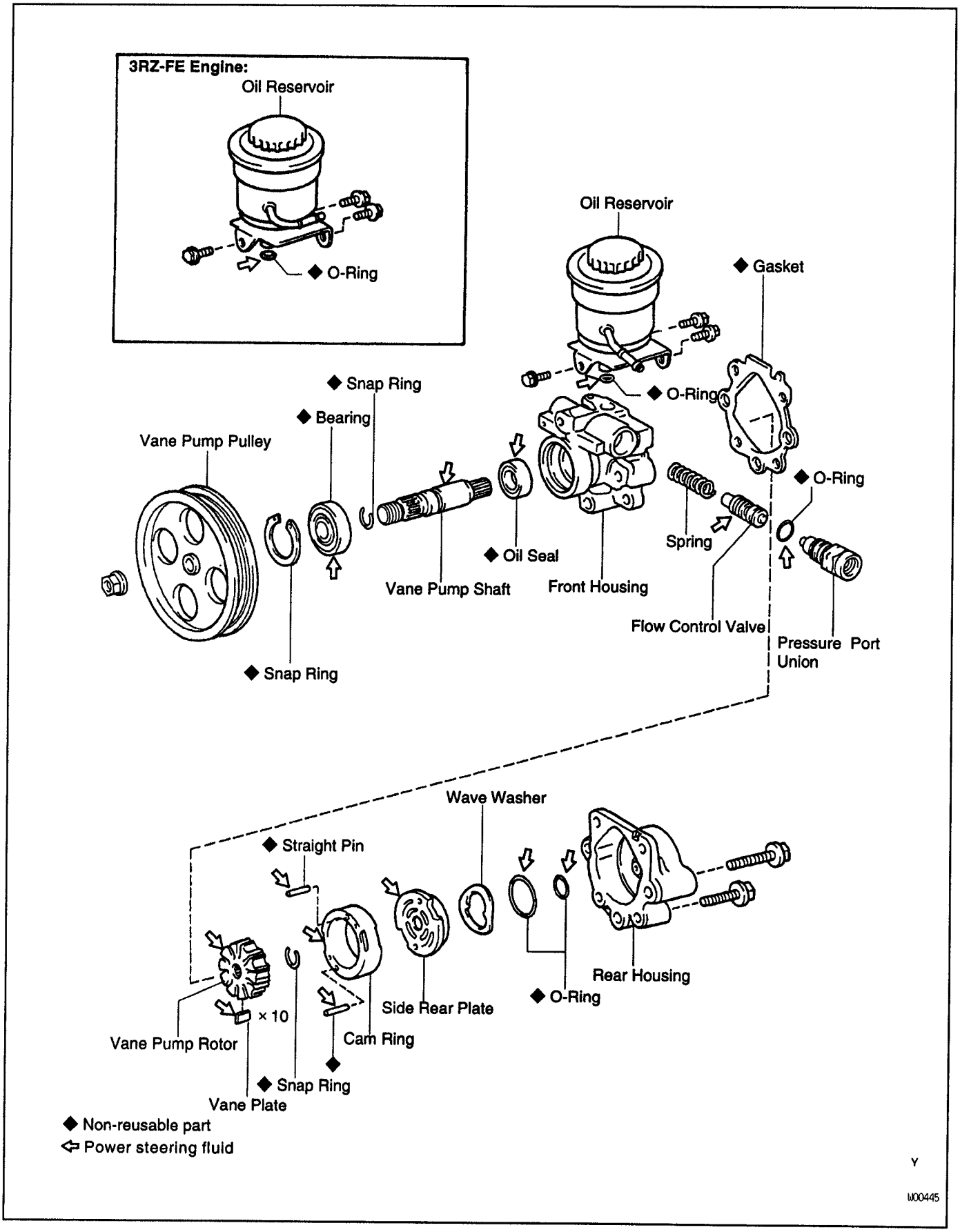

Y

W00445

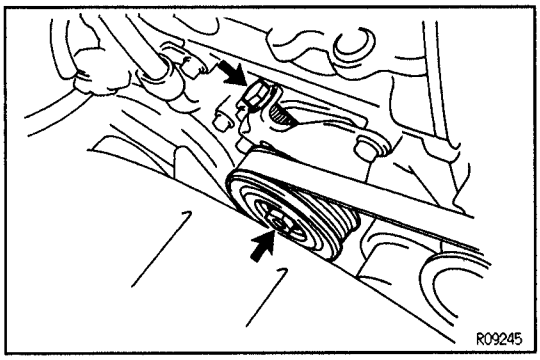

POWER STEERING VANE PUMP REMOVAL

SR10G–02

1. **REMOVE DRIVE BELT**

(a) Loosen the power steering idle pulley set bolt.

(b) Loosen the belt adjusting bolt.

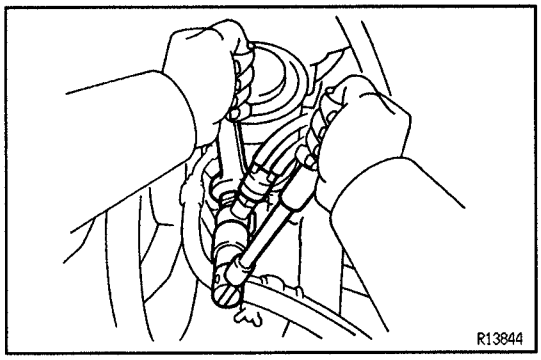

2. **DISCONNECT PRESSURE FEED TUBE**

Using a spanner (24 mm) to hold the pressure port union, remove the union bolt and 2 gaskets.

3. **DISCONNECT RETURN HOSE**

NOTICE: Take care not to spill fluid on the drive belt.

4. **REMOVE PS VANE PUMP ASSEMBLY**

Remove the 2 pump assembly set bolts.

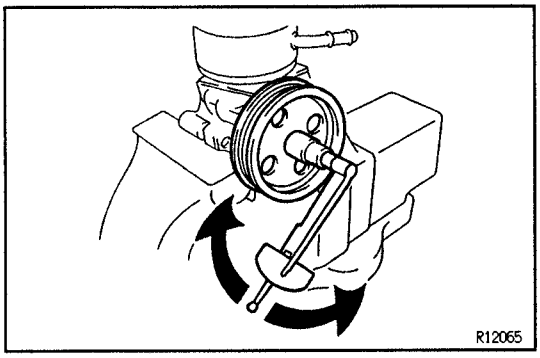

POWER STEERING VANE PUMP DISASSEMBLY

SR10H–04

NOTICE:When using a vise, do not overtighten it.

1. **MEASURE PS VANE PUMP ROTATING TORQUE**

(a) Check that the pump rotates smoothly without abnormal noise.

(b) Using a torque wrench, check the pump rotating torque.

Rotating torque:

0.25 N·m (2.5 kgf·cm, 2.2 in.·lbf) or less

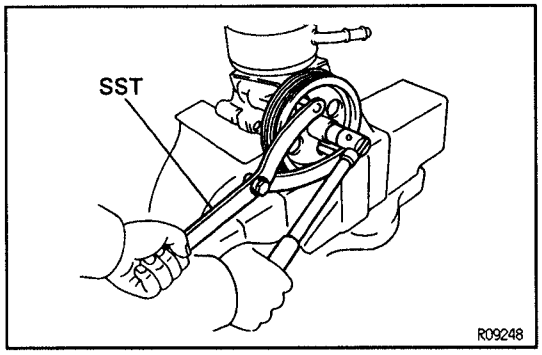

2. **REMOVE VANE PUMP PULLEY**

Using SST to stop the pulley rotating, remove the pulley set nut.

SST 09960–10010 (09962–01000, 09963–01000)

3. **REMOVE OIL RESERVOIR**

(a) Remove the 3 bolts and oil reservoir.

(b) Remove the O–ring from the oil reservoir.

4. **REMOVE PRESSURE PORT UNION, FLOW CONTROL VALVE AND SPRING**

Remove the O–ring from the union.

5. **REMOVE REAR HOUSING**

(a) Remove the 2 bolts and rear housing.

(b) Remove the 2 O–rings from the housing.

6. **REMOVE WAVE WASHER**

7. **REMOVE SIDE REAR PLATE**

SR

8. REMOVE CAM RING, VANE PLATES AND VANE PUMP ROTOR

(a) Remove the 10 plates.
NOTICE: Take care not to drop the plate.

(b) Using a screwdriver, remove the snap ring from the vane pump shaft.

9. REMOVE STRAIGHT PINS

Remove the 2 pins from the front housing.

10. REMOVE GASKET

11. REMOVE VANE PUMP SHAFT WITH BEARING

(a) Using snap ring pliers, remove the snap ring from the front housing.

(b) Wind vinyl tape on the serrated part of the vane pump shaft.

(c) Using a press, press out the shaft with the bearing.
NOTICE: Be careful not to damage the oil seal lip.

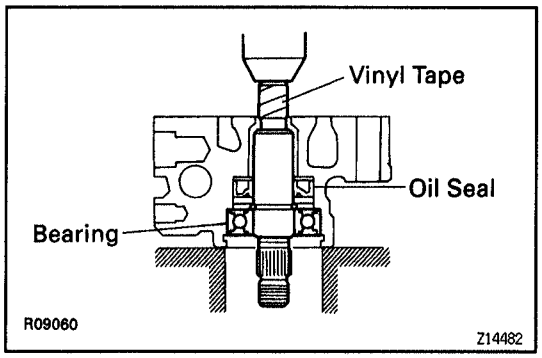

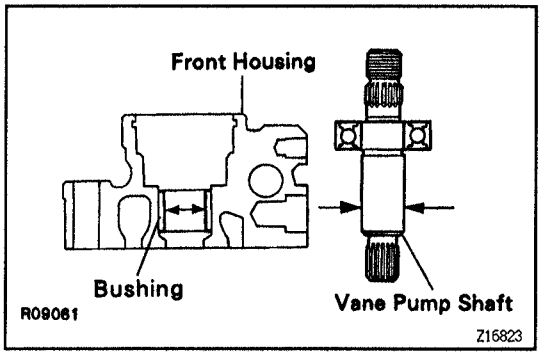

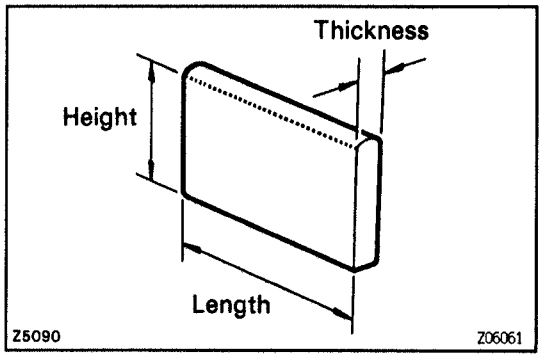

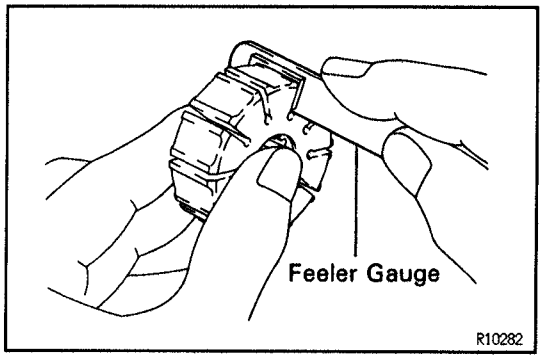

POWER STEERING VANE PUMP INSPECTION AND REPLACEMENT

SR1CN–02

NOTICE: When using a vise, do not overtighten it.

1. CHECK OIL CLEARANCE BETWEEN VANE PUMP SHAFT AND BUSHING

Using a micrometer and caliper gauge, measure the oil clearance.

	Clearance	mm (in.)
Standard	0.03–0.05 (0.0012–0.0020)	
Maximum	0.07 (0.0028)	

2. INSPECT VANE PUMP ROTOR AND VANE PLATES

Using a micrometer, measure the height, thickness and length of the 10 plates.

	Minimum	mm (in.)
Height	8.6 (0.339)	
Thickness	1.397 (0.05500)	
Length	14.991 (0.59020)	

(b) Using a feeler gauge, measure the clearance between the rotor groove and plate.

	Oil clearance	mm (in.)
Maximum	0.035 (0.00138)	

SR

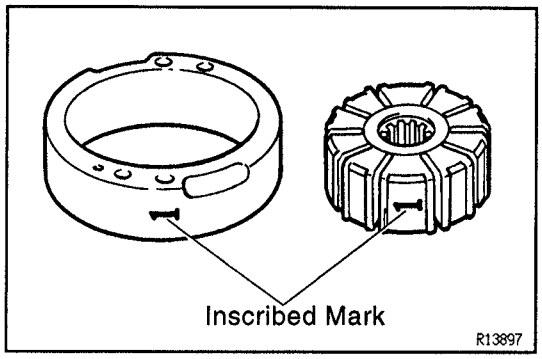

If it is more than the maximum, replace the plate and/or rotor with one having the same mark stamped on the cam ring.

Inscribed mark:

1, 2, 3, 4 or None

HINT: There are 5 vane plate lengths with the following rotor and cam ring marks:

Rotor and cam ring mark	Vane plate part number	Vane plate length mm (in.)
None	44345–26010	14.999–15.001 (0.59051–0.59059)
1	44345–26020	14.997–14.999 (0.59043–0.59051)
2	44345–26030	14.995–14.997 (0.59035–0.59043)
3	44345–26040	14.993–14.995 (0.59027–0.59035)
4	44345–26050	14.991–14.993 (0.59020–0.59027)

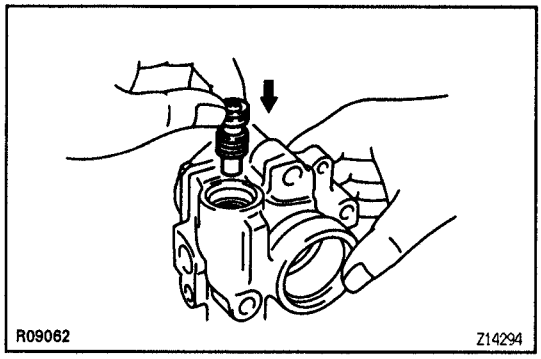

3. INSPECT FLOW CONTROL VALVE

(a) Coat the valve with power steering fluid and check that it falls smoothly into the valve hole by its own weight.

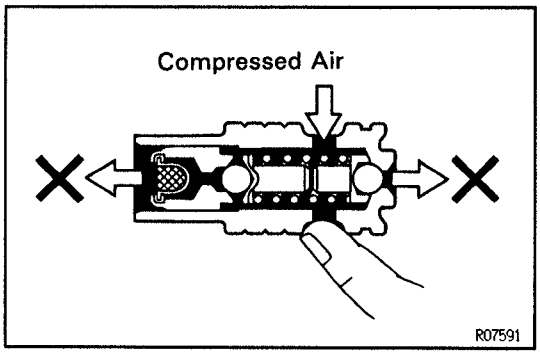

(b) Check the flow control valve for leakage.
Close one of the holes and apply compressed air 392 –490 kPa (4–5 kgf/cm², 57–71 psi) into the opposite side, and confirm that air does not come out from the end hole.

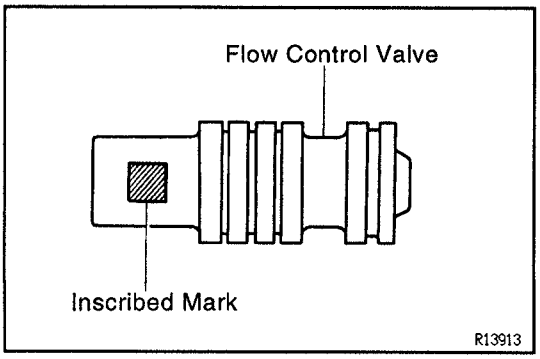

If necessary, replace the valve.

NOTICE: Install a new valve with the same inscribed mark as the old one.

Inscribed mark:

A, B, C, D, E or F

SR

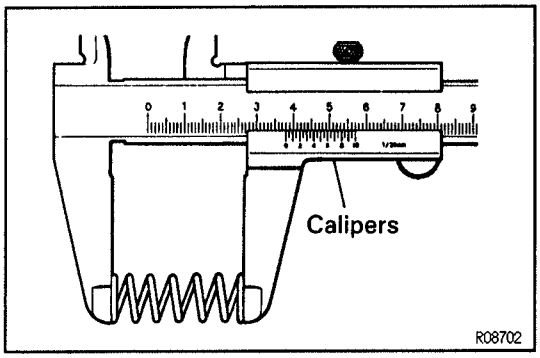

4. INSPECT SPRING

Using calipers, measure the free length of the spring.

	Free length	mm (in.)
Minimum	33.2 (1.307)	

If it is not within specification, replace the spring.

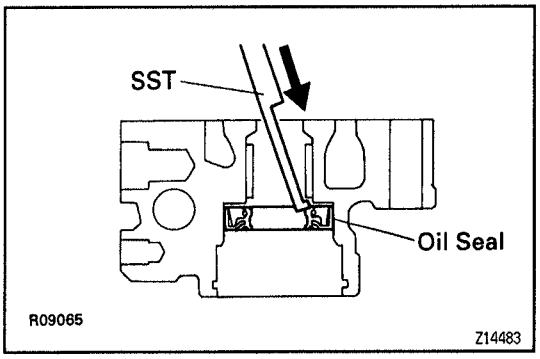

5. IF NECESSARY, REPLACE OIL SEAL

(a) Using SST, tap out the oil seal from the front housing.
SST 09631–10030
NOTICE: Be careful not to damage the bushing of the front housing.

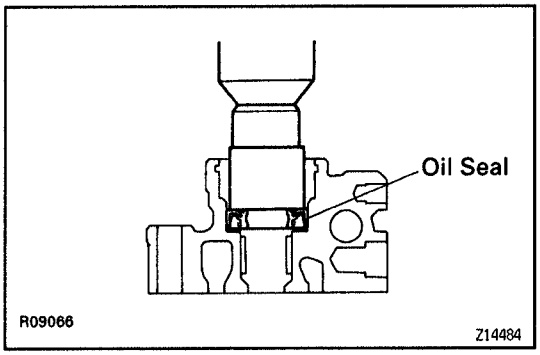

(b) Coat a new oil seal lip with power steering fluid.
(c) Using a socket wrench (24 mm), press in the oil seal.
NOTICE: Make sure you install the oil seal facing the correct direction.

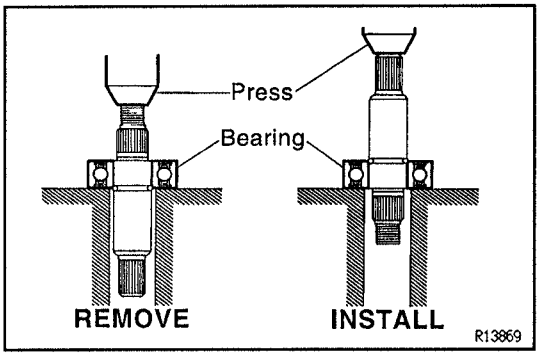

6. IF NECESSARY, REPLACE BEARING

(a) Press out the bearing from the vane pump shaft.
(b) Using snap ring pliers, remove the snap ring from the shaft.
NOTICE: Be careful not to damage the shaft.
(c) Using snap ring pliers, install a new snap ring to the shaft.
NOTICE: Be careful not to damage the shaft.
(d) Coat a new bearing with power steering fluid.
(e) Press in the bearing to the shaft.

SR1DY-02

POWER STEERING VANE PUMP ASSEMBLY

NOTICE: When using a vise, do not overtighten it.

1. COAT WITH POWER STEERING FLUID
(See page SR–36)

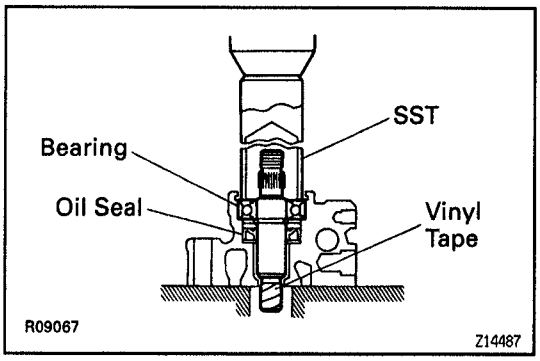

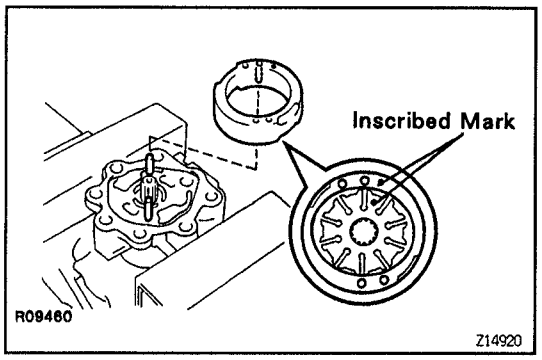

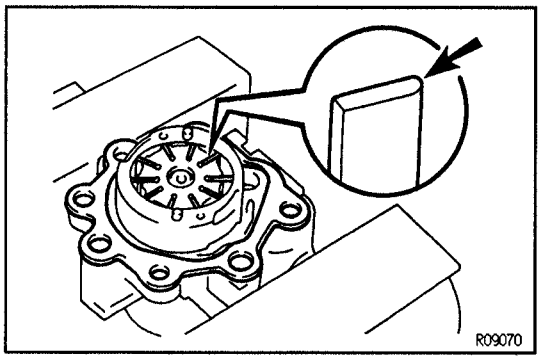

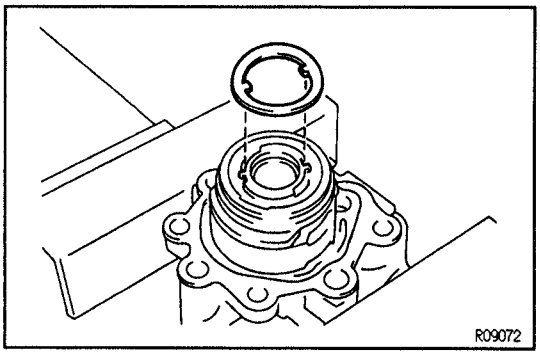

2. INSTALL VANE PUMP SHAFT WITH BEARING

(a) Wind vinyl tape on the serrated part of the vane pump shaft.

(b) Using SST, press in the shaft with the bearing.
SST 09608–04031
NOTICE: Be careful not to damage the oil seal.

(c) Using snap ring pliers, install a new snap ring to the front housing.

3. INSTALL STRAIGHT PINS

Using a plastic hammer, tap in 2 new pins to the front housing.
NOTICE: Be careful not to damage the pins.

4. INSTALL CAM RING

Install the ring with the inscribed mark facing outward.
HINT: Align the holes of the cam ring with the straight pins.

5. INSTALL VANE PUMP ROTOR

(a) Install the rotor with the inscribed mark facing outward.

(b) Install a new snap ring to the vane pump shaft.

6. INSTALL VANE PLATES AND GASKET

(a) Install the 10 plates with the round end facing outward.

(b) Install a new gasket on the front housing.
NOTICE: Be careful the direction of the gasket.

7. INSTALL SIDE REAR PLATE

Align the holes of the side rear plate and straight pins, and install the rear plate.

8. INSTALL WAVE WASHER

Install the wave washer so that its protrusions fit into the slots in the side rear plate.

9. INSTALL REAR HOUSING

(a) Coat 2 new O–rings with power steering fluid.

(b) Install the 2 O–rings to the housing.

(c) Torque the 2 bolts.
Torque: 24 N·m (240 kgf·cm, 17 ft·lbf)

10. INSTALL SPRING, FLOW CONTROL VALVE AND PRESSURE PORT UNION

(a) Install the valve facing the correct direction.
(See page SR–36)

(b) Coat a new O–ring with power steering fluid.

(c) Install the O–ring to the union.

(d) Torque the union.
Torque: 83 N·m (850 kgf·cm, 61 ft·lbf)

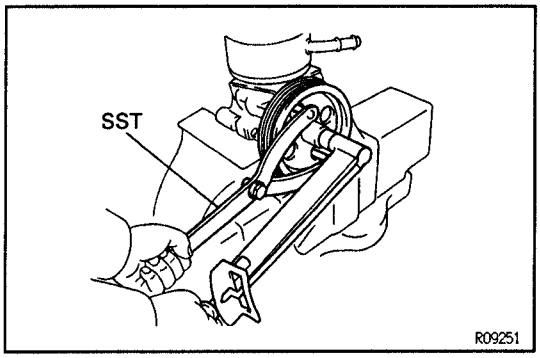

11. INSTALL OIL RESERVOIR

(a) Coat a new O–ring with power steering fluid and install it to the oil reservoir.

(b) Install the oil reservoir with the 3 bolts.

Torque:

Front side bolt: 13 N·m (130 kgf·cm, 9 ft·lbf)

Rear side bolts: 24 N·m (240 kgf·cm, 17 ft·lbf)

12. INSTALL VANE PUMP PULLEY

Using SST to stop the pulley rotating, torque the nut.

SST 09960–10010 (09962–01000, 09963–01000)

Torque: 43 N·m (440 kgf·cm, 32 ft·lbf)

13. MEASURE PS VANE PUMP ROTATING TORQUE

(See page SR–37)

SR19L–04

POWER STEERING VANE PUMP INSTALLATION

1. INSTALL PS VANE PUMP ASSEMBLY

Torque the 2 pump assembly set bolts.

Torque: 39 N·m (400 kgf·cm, 29 ft·lbf)

2. CONNECT RETURN HOSE

3. CONNECT PRESSURE FEED TUBE

Torque the union bolt with a new gasket on each side of the tube.

Torque: 47 N·m (475 kgf·cm, 34 ft·lbf)

SR

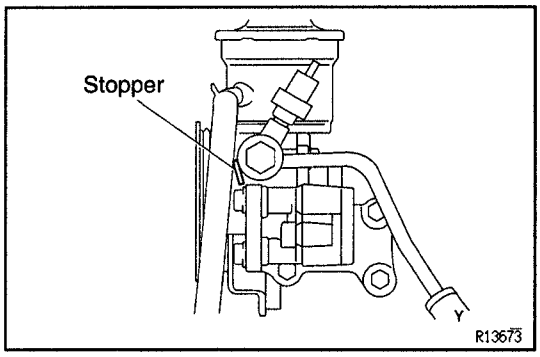

HINT: Make sure the stopper of the tube is touching the PS pump body as shown, then torque the union bolt.

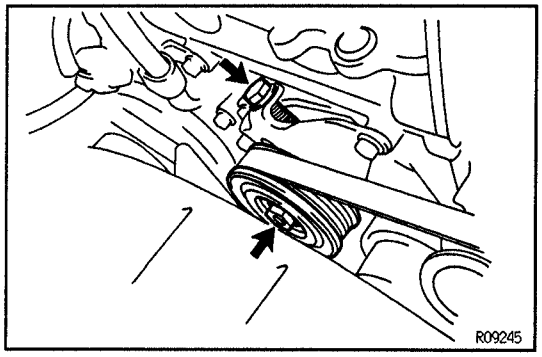

4. INSTALL DRIVE BELT

(a) Tightening the belt adjusting bolt and adjust drive belt tension.

(See page SR–7)

(b) Torque the power steering idle pulley set nut.

Torque: 39 N·m (400 kgf·cm, 29 ft·lbf)

5. BLEED POWER STEERING SYSTEM

(See page SR–9)

POWER STEERING VANE PUMP (5VZ–FE)

COMPONENTS

SR197–03

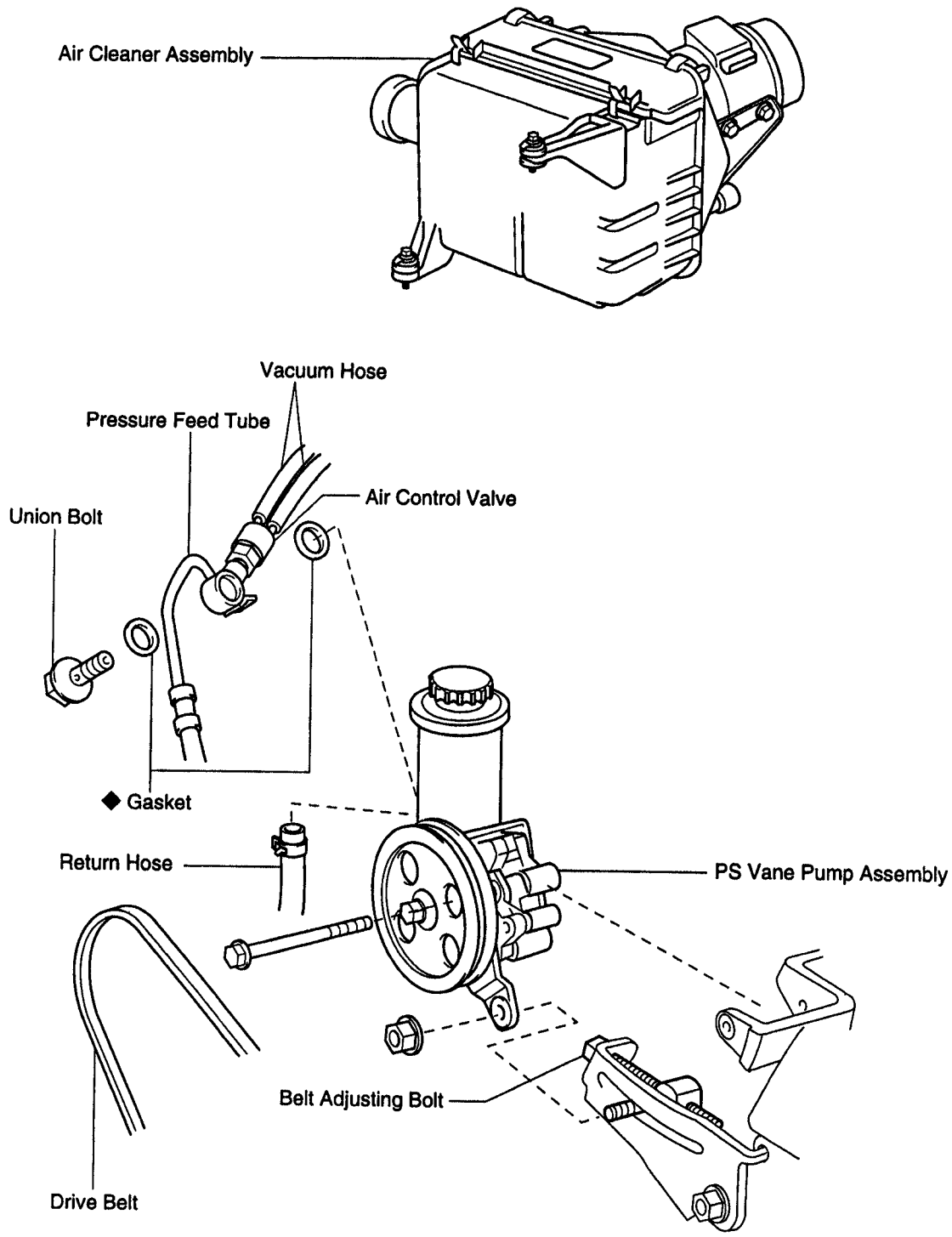

SR

SR196–02

COMPONENTS

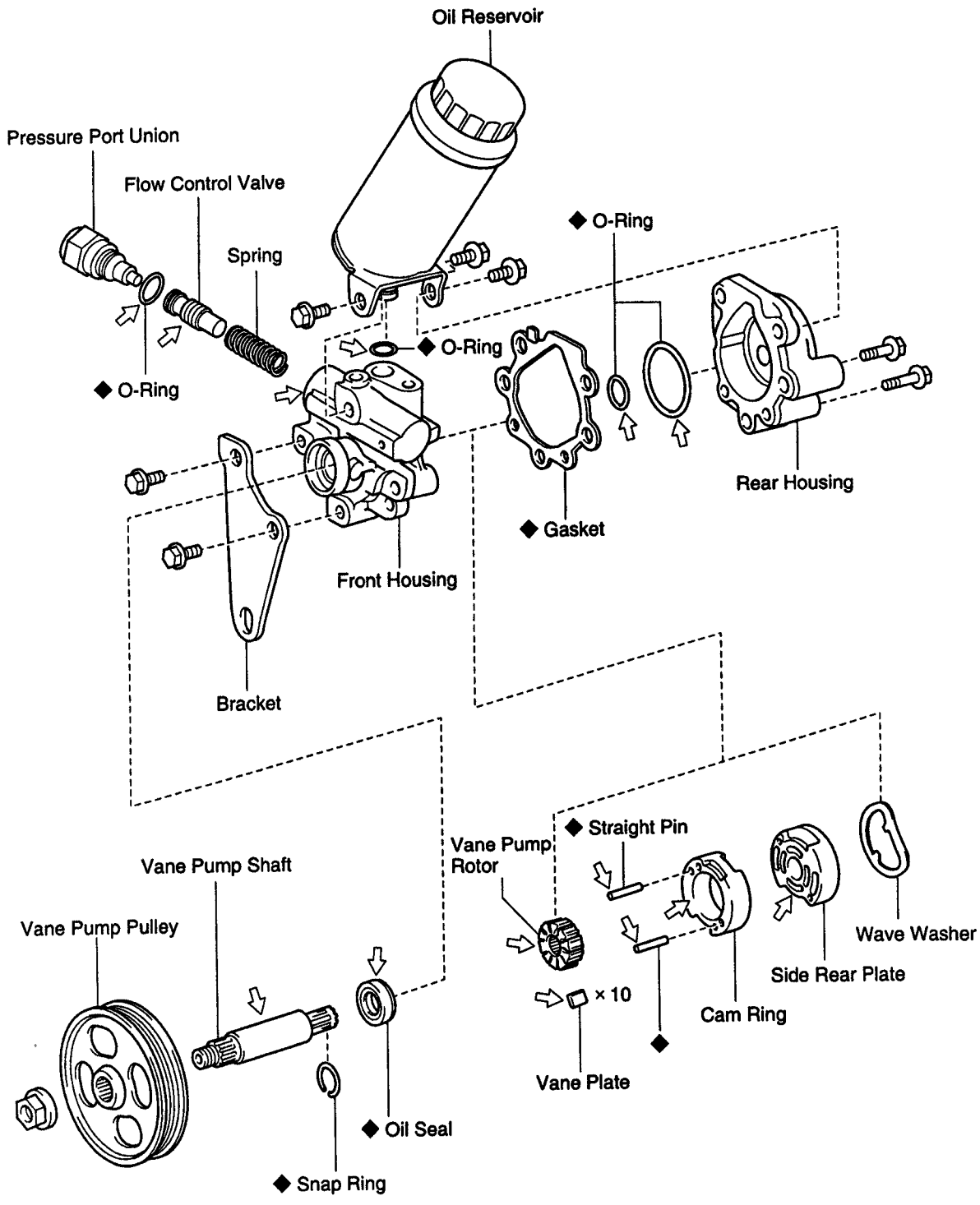

◆ Non-reusable part
⇦ Power steering fluid

Y

R13871

SR

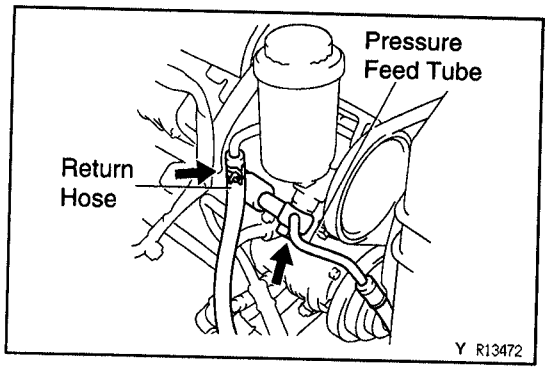

POWER STEERING VANE PUMP REMOVAL SR199–02

1. **REMOVE AIR CLEANER ASSEMBLY**
   Loosen the 3 bolts.
2. **DISCONNECT RETURN HOSE**
   NOTICE: Take care not to spill fluid on the drive belt.
3. **DISCONNECT PRESSURE FEED TUBE**
   Remove the union bolt and 2 gaskets, and disconnect the tube from the PS vane pump assembly.

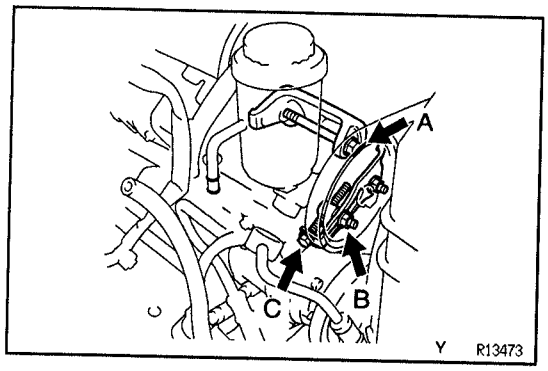

4. **REMOVE DRIVE BELT**
   (a) Loosen the bolt A and nut B.
   (b) Loosen the bolt C.
5. **REMOVE PS VANE PUMP ASSEMBLY**
   Remove the bolt A and nut B.

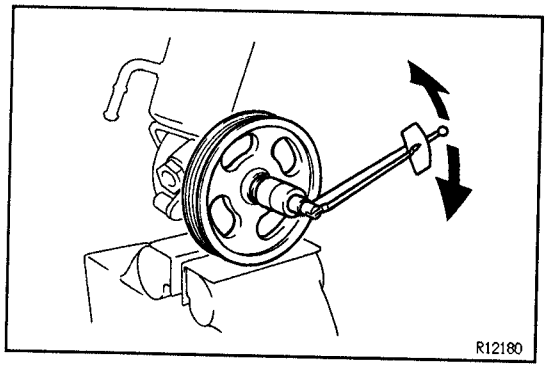

POWER STEERING VANE PUMP DISASSEMBLY SR19A–04

NOTICE: When using a vise, do not overtighten it.

1. **MEASURE PS VANE PUMP ROTATING TORQUE**
   (a) Check that the pump rotates smoothly without abnormal noise.
   (b) Using a torque wrench, check the pump rotating torque.
   Rotating torque:
   0.27 N·m (2.8 kgf·cm, 2.4 in.·lbf) or less

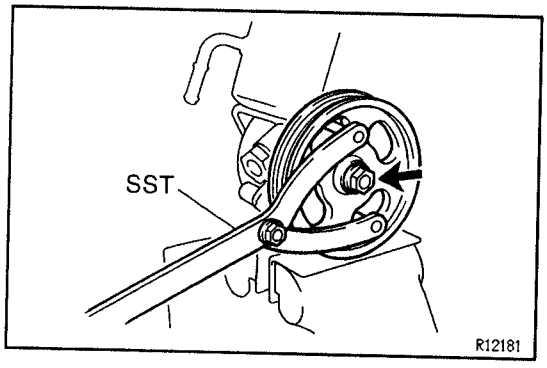

2. **REMOVE VANE PUMP PULLEY**
   Using SST to stop the pulley rotating, remove the pulley set nut.
   SST 09960–10010 (09962–01000, 09963–01000)
3. **REMOVE OIL RESERVOIR**
   (a) Remove the 3 bolts and oil reservoir.
   (b) Remove the O–ring from the oil reservoir.
4. **REMOVE PRESSURE PORT UNION, FLOW CONTROL VALVE AND SPRING**
   Remove the O–ring from the union.
5. **REMOVE BRACKET**
   Remove the 2 bolts.
6. **REMOVE REAR HOUSING**
   (a) Remove the 2 bolts.
   (b) Remove the 2 O–rings from the housing.
7. **REMOVE WAVE WASHER**
8. **REMOVE SIDE REAR PLATE**

SR

9. REMOVE GASKET
10. REMOVE CAM RING, VANE PLATES AND VANE PUMP ROTOR

(a) Remove the 10 plates.
NOTICE: Take care not to drop the plate.

(b) Using a screwdriver, remove the snap ring from the vane pump shaft.

11. REMOVE VANE PUMP SHAFT
12. REMOVE STRAIGHT PINS

Remove the 2 pins from the front housing.

SR199-04

POWER STEERING VANE PUMP INSPECTION AND REPLACEMENT

NOTICE: When using a vise, do not overtighten it.

1. CHECK OIL CLEARANCE BETWEEN VANE PUMP SHAFT AND BUSHING

Using a micrometer and caliper gauge, measure the oil clearance.

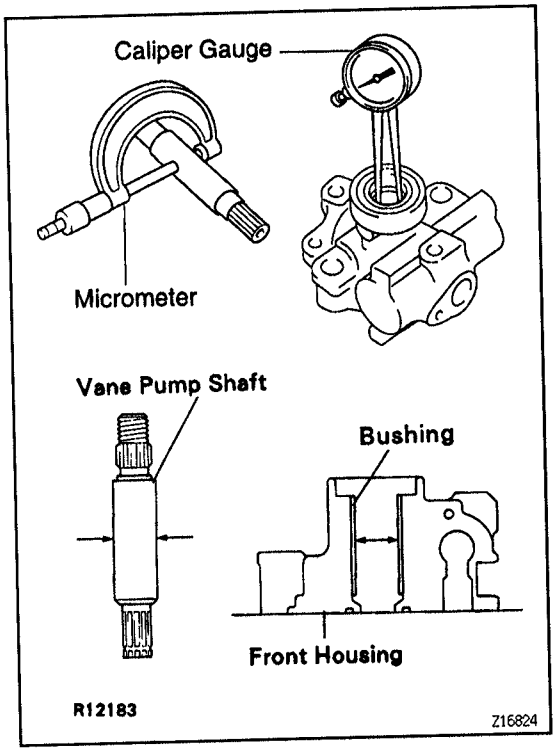

	Oil clearance	mm (in.)
Standard	0.03 – 0.05 (0.0012 – 0.0020)	
Maximum	0.07 (0.0028)	

SR

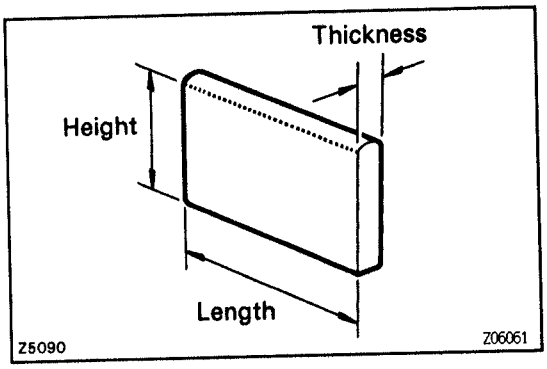

2. INSPECT VANE PUMP ROTOR AND VANE PLATES

(a) Using a micrometer, measure the height, thickness and length of the 10 plates.

	Minimum	mm (in.)
Height	8.6 (0.339)	
Thickness	1.397 (0.05500)	
Length	14.991 (0.59020)	

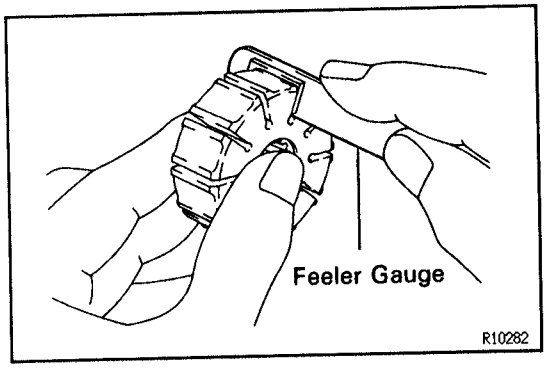

(b) Using a feeler gauge, measure the clearance between the rotor groove and plate.

	Clearance	mm (in.)
Maximum	0.035 (0.00138)	

If it is more than the maximum, replace the plate and/or rotor with one having the same mark stamped on the cam ring.

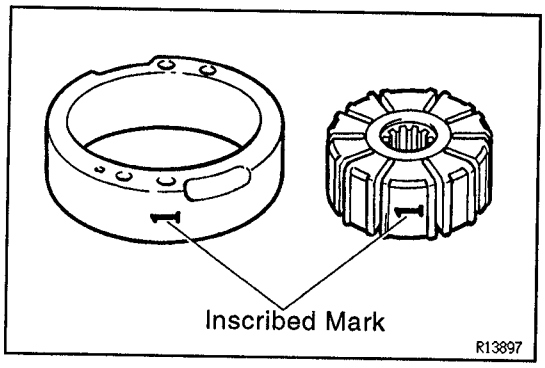

Inscribed mark:

1, 2, 3, 4 or None

HINT: There are 5 vane plate lengths with the following rotor and cam ring marks:

Rotor and cam ring mark	Vane plate part number	Vane plate length mm (in.)
None	44345–26010	14.999–15.001 (0.59051–0.59059)
1	44345–26020	14.997–14.999 (0.59043–0.59051)
2	44345–26030	14.995–14.997 (0.59035–0.59043)
3	44345–26040	14.993–14.995 (0.59027–0.59035)
4	44345–26050	14.991–14.993 (0.59020–0.59027)

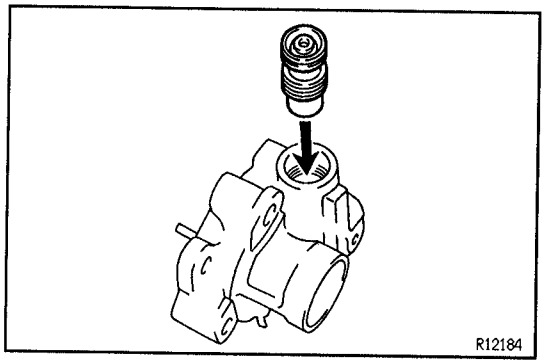

3. INSPECT FLOW CONTROL VALVE

(a) Coat the valve with power steering fluid and check that it falls smoothly into the valve hole by its own weight.

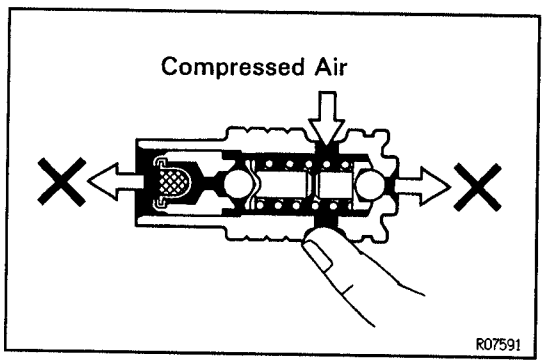

(b) Check the flow control valve for leakage.
Close one of the holes and apply compressed air 392 –490 kPa (4–5 kgf/cm², 57–71 psi) into the opposite side, and confirm that air does not come out from the end holes.

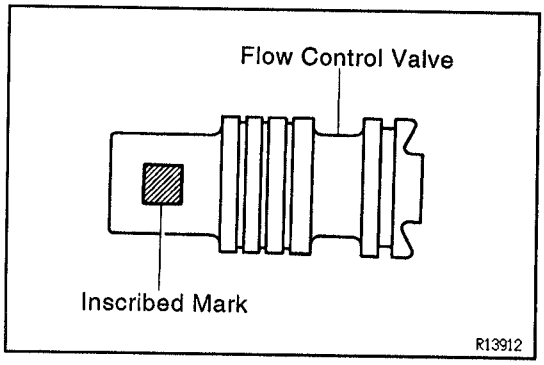

If necessary, replace the valve.

NOTICE: Install a new valve with the same inscribed mark as the old one.

Inscribed mark:

A, B, C, D, E or F

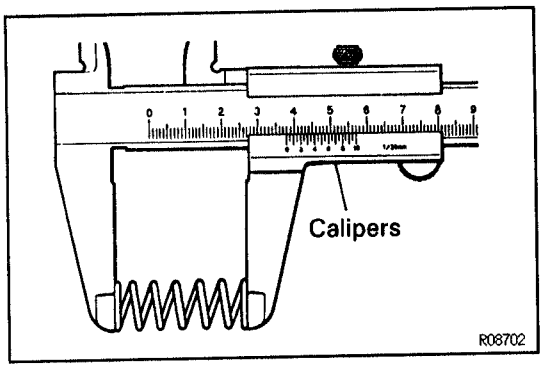

4. INSPECT SPRING

Using calipers, measure the free length of the spring.

	Free length	mm (in.)
Minimum	33.2 (1.307)	

If it is not within specification, replace the spring.

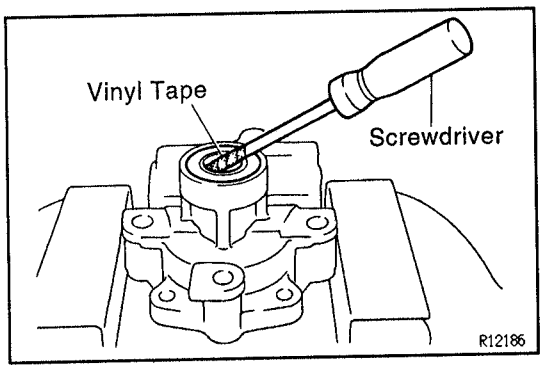

5. IF NECESSARY, REPLACE OIL SEAL

(a) Using a screwdriver with vinyl tape wound around its tip, remove the oil seal.

NOTICE: Be careful not to damage the bushing of the front housing.

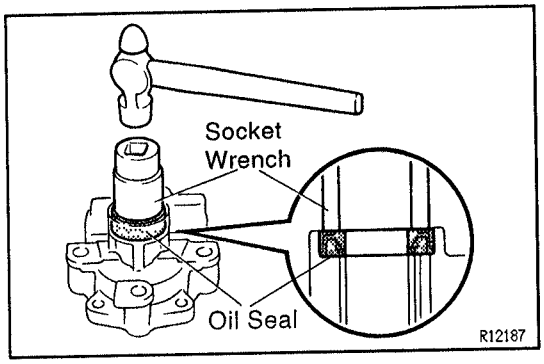

(b) Coat a new oil seal lip with power steering fluid.

(c) Using a socket wrench (24 mm) and hammer, tap in the oil seal.

NOTICE: Make sure you install the oil seal facing the correct direction.

SR19C–06

POWER STEERING VANE PUMP ASSEMBLY

NOTICE: When using a vise, do not overtighten it.

1. COAT WITH POWER STEERING FLUID

(See page SR–44)

2. INSTALL STRAIGHT PINS

Using a plastic hammer, tap in 2 new pins to the front housing.

NOTICE: Be careful not to damage the pins.

3. INSTALL VANE PUMP SHAFT

4. INSTALL CAM RING

Install the ring with the inscribed mark facing outward.

HINT: Align the holes of the cam ring with the straight pins.

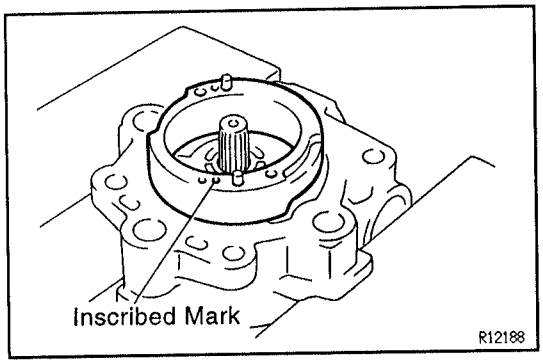

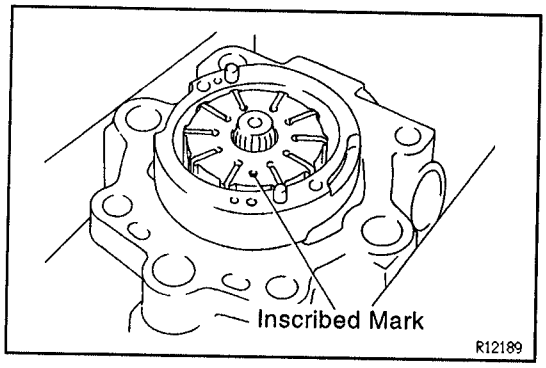

5. INSTALL VANE PUMP ROTOR

(a) Install the rotor with the inscribed mark facing outward.

(b) Install a new snap ring to the vane pump shaft.

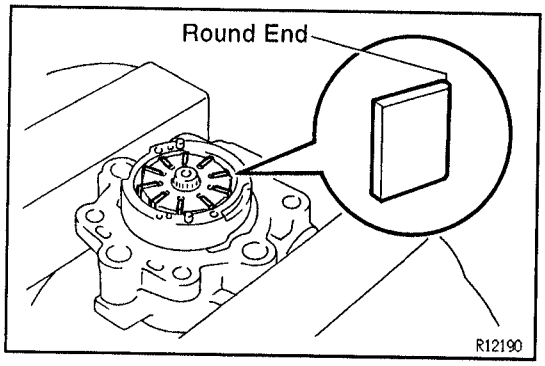

6. INSTALL VANE PLATES

Install the 10 plates with the round end facing outward.

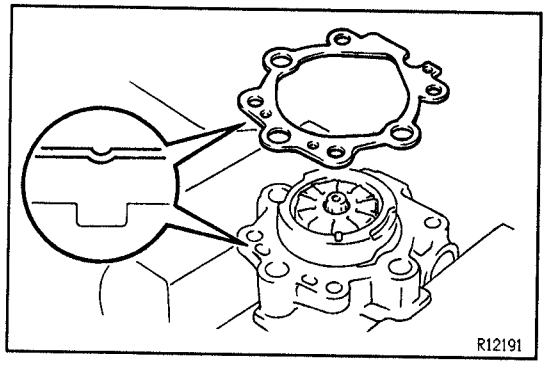

7. INSTALL GASKET

Install a new gasket on the front housing.

NOTICE: Be careful the direction of the gasket.

8. INSTALL SIDE REAR PLATE

Align the 2 straight pins and holes of the plate.

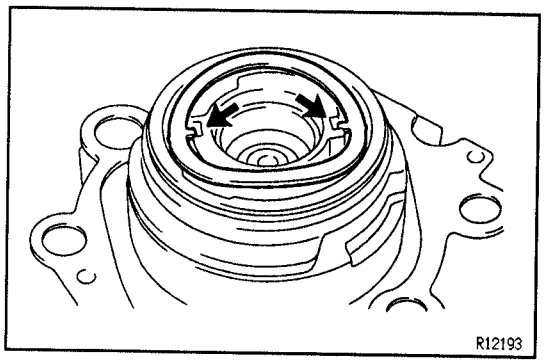

9. INSTALL WAVE WASHER

Install the washer so that its protrusions fit into the slots in the side rear plate.

10. INSTALL REAR HOUSING

(a) Coat 2 new O–rings with power steering fluid.

(b) Install the 2 O–rings to the housing.

(c) Torque the 2 bolts.

Torque: 24 N·m (240 kgf·cm, 17 ft·lbf)

11. INSTALL SPRING, FLOW CONTROL VALVE AND PRESSURE PORT UNION

(a) Install the valve facing the correct direction.
(See page SR–44)

(b) Coat a new O–ring with power steering fluid.

(c) Install the O–ring to the union.

(d) Torque the union.

Torque: 83 N·m (850 kgf·cm, 62 ft·lbf)

12. INSTALL BRACKET

Torque the 2 bolts.

Torque: 43 N·m (440 kgf·cm, 32 ft·lbf)

13. INSTALL OIL RESERVOIR

(a) Coat a new O–ring with power steering fluid and install it to the oil reservoir.

(b) Install the oil reservoir with the 3 bolts.

Torque:

Front side bolt: 13 N·m (130 kgf·cm, 9 ft·lbf)

Rear side bolts: 24 N·m (240 kgf·cm, 17 ft·lbf)

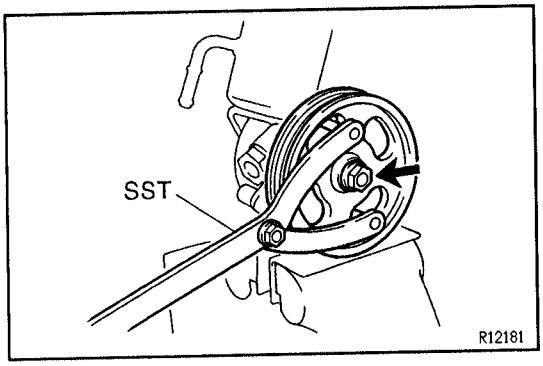

14. INSTALL VANE PUMP PULLEY

Using SST to stop the pulley rotating, torque the nut.

SST 09960–10010 (09962–01000, 09963–01000)

Torque: 43 N·m (440 kgf·cm, 32 ft·lbf)

15. MEASURE PS VANE PUMP ROTATING TORQUE

(See page SR–45)

SR19D–03

POWER STEERING VANE PUMP INSTALLATION

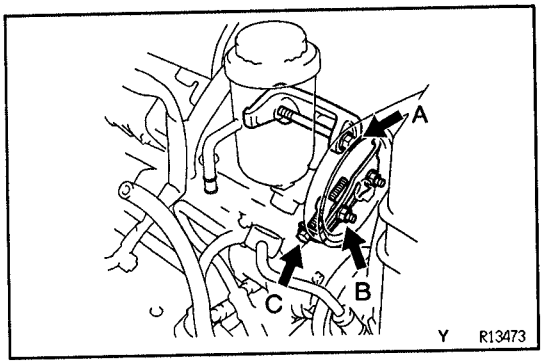

1. INSTALL PS VANE PUMP ASSEMBLY

Temporarily tighten the bolt A and nut B.

2. INSTALL DRIVE BELT

(a) Tightening the bolt C, adjust drive belt tension.

(See page SR–7)

(b) Torque the bolt A and nut B.

Torque: 43 N·m (440 kgf·cm, 32 ft·lbf)

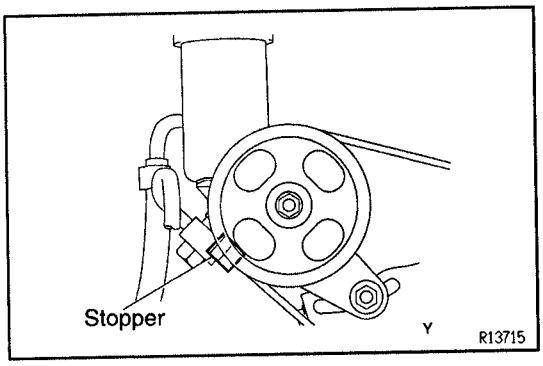

3. CONNECT PRESSURE FEED TUBE

Torque the union bolt with a new gasket on each side of the tube.

Torque: 47 N·m (475 kgf·cm, 34 ft·lbf)

HINT: Make sure the stopper of the tube is touching the PS pump body as shown, then torque the union bolt.

4. CONNECT RETURN HOSE

5. INSTALL AIR CLEANER ASSEMBLY

Tighten the 3 bolts.

6. BLEED POWER STEERING SYSTEM

(See page SR–9)

MANUAL STEERING GEAR
COMPONENTS

SR1CQ-01

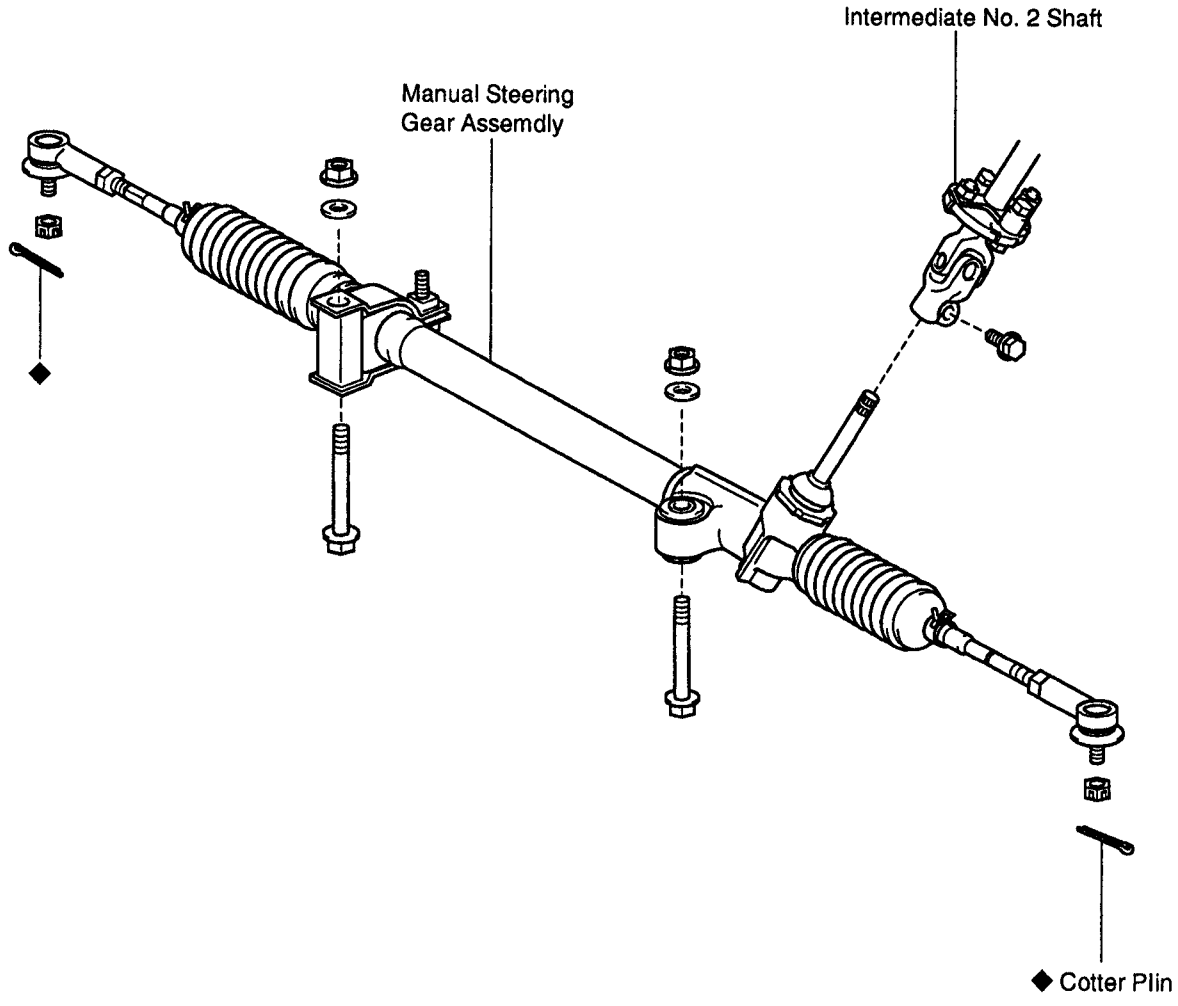

◆ Non-reusable part

Y

R13795

SR

SR1GR-01

COMPONENTS

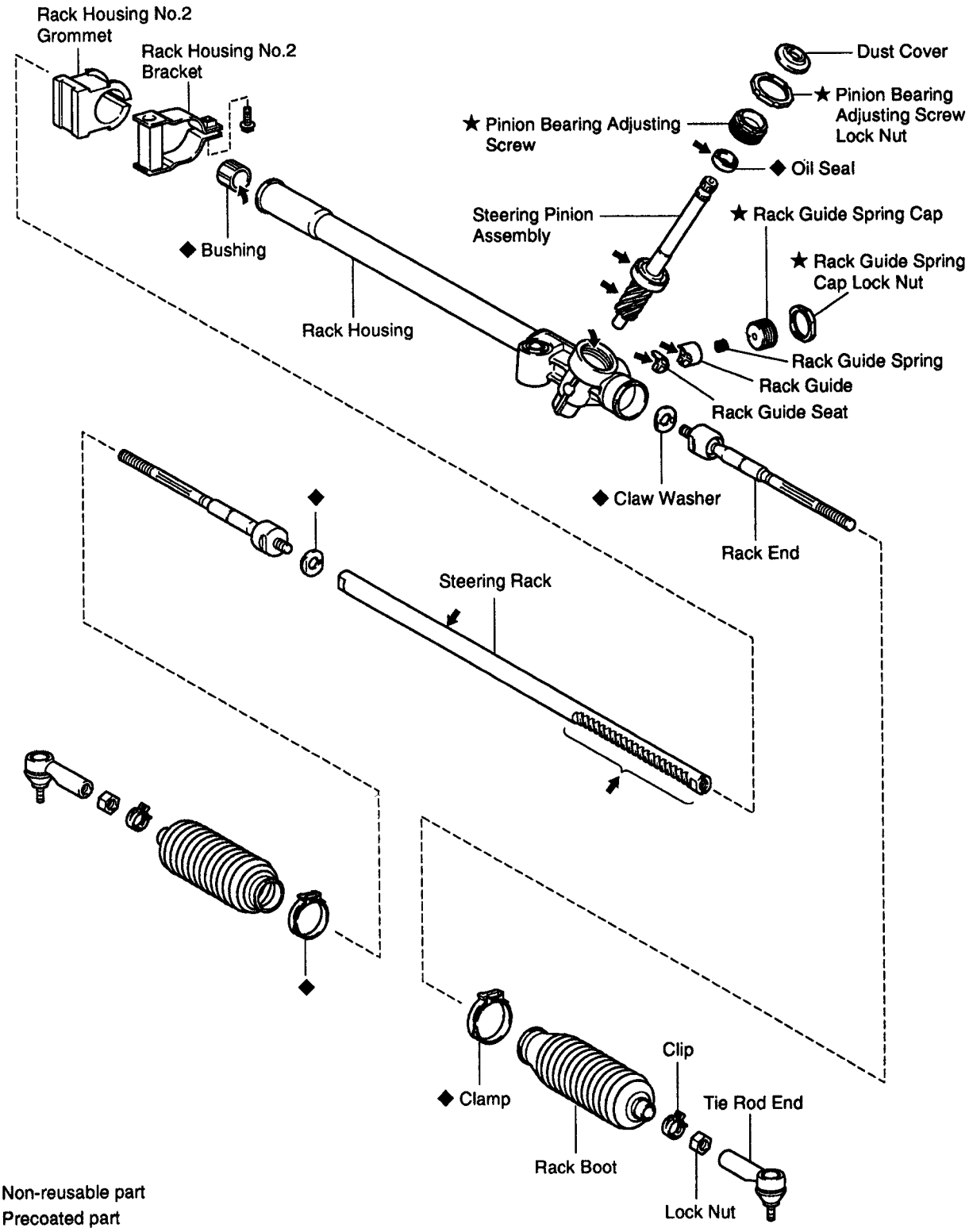

SR

MANUAL STEERING GEAR REMOVAL

SR1C6-02

1. **PLACE FRONT WHEELS FACING STRAIGHT AHEAD**
2. **REMOVE STEERING WHEEL PAD**
   (See page SR–16)
3. **REMOVE STEERING WHEEL**
   (See page SR–16)
4. **DISCONNECT RH AND LH TIE ROD ENDS**
   (See page SA–70)
5. **DISCONNECT INTERMEDIATE NO. 2 SHAFT**
   (See page SR–17)
6. **REMOVE MANUAL STEERING GEAR ASSEMBLY**
   Remove the 2 gear assembly set bolts, nuts and washers.

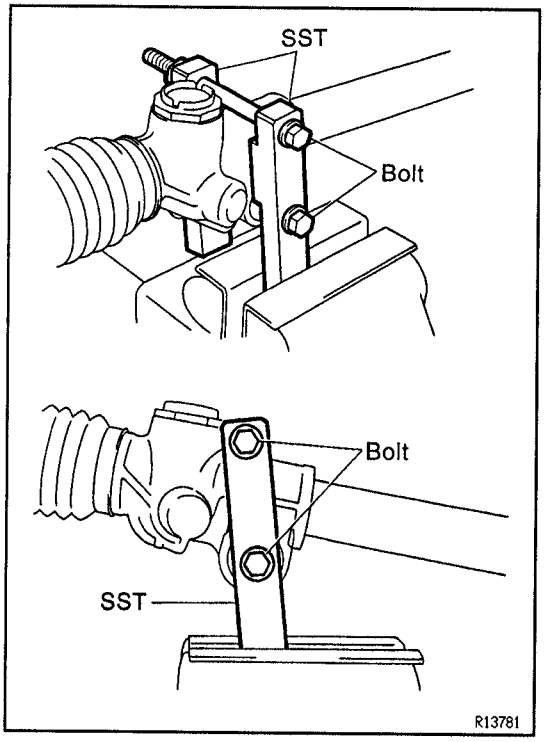

MANUAL STEERING GEAR DISASSEMBLY

SR1CT-01

NOTICE: When using a vise, do not overtighten it.

1. **SECURE MANUAL STEERING GEAR IN VISE**
   Using SST and 2 bolts, secure the gear assembly in a vise, as shown in the illustration.
   SST 09612–00012
   Reference:
   Bolt: 90105–10017
   Nut: 90170–10198
   HINT: Use 2 of the same type of SST.

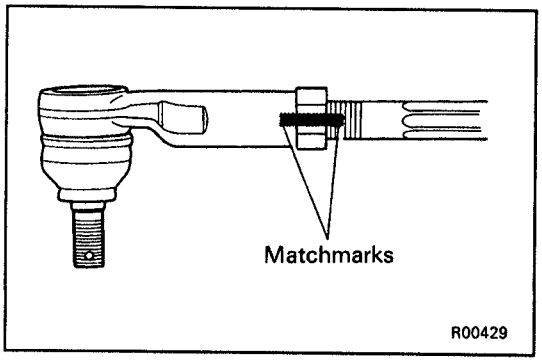

2. **REMOVE RH AND LH TIE ROD ENDS AND LOCK NUTS**
   Place matchmarks on the tie rod end and rack end.

SR

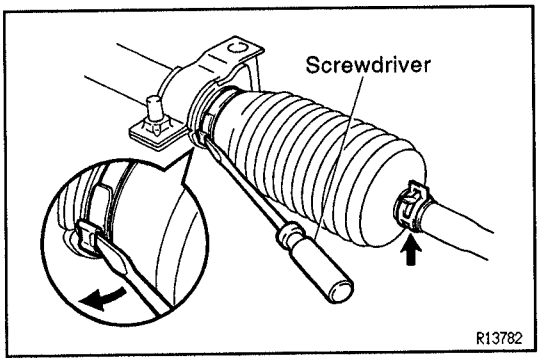

3. REMOVE RH AND LH CLIPS, RACK BOOTS AND CLAMPS

Using a screwdriver, loosen the clamp.

NOTICE:

- **Be careful not to damage the boot.**
- **Mark the RH and LH boots.**

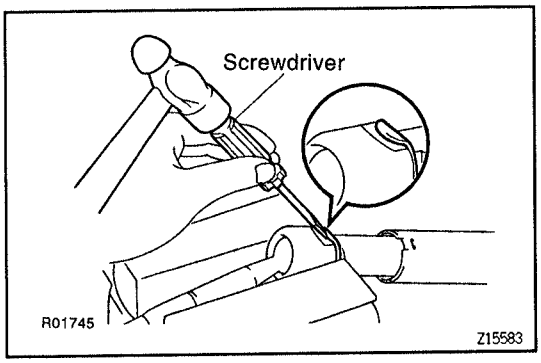

4. REMOVE RH AND LH RACK ENDS AND CLAW WASHERS

(a) Using a screwdriver and hammer, unstake the washer.

NOTICE: Avoid any impact to the steering rack.

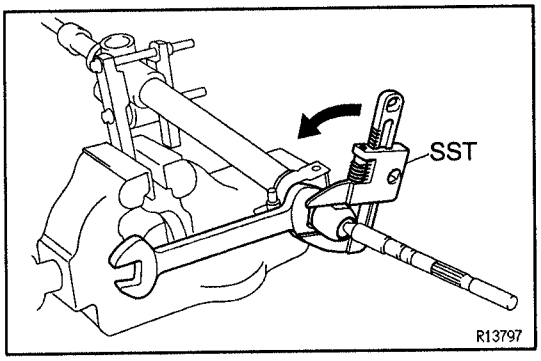

(b) Using a spanner to hold the steering rack steady, and using SST, remove the rack end.

SST 09922–10010

NOTICE:

- **Use SST 09922–10010 in the direction shown in the illustration.**
- **Mark the RH and LH rack ends.**

SR

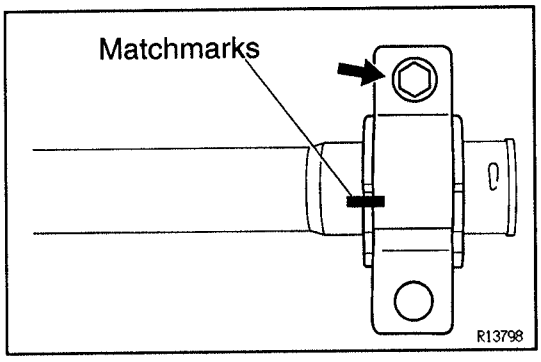

5. REMOVE RACK HOUSING NO. 2 BRACKET AND GROMMET

(a) Place matchmarks on the bracket and rack housing.

(b) Remove the bolt.

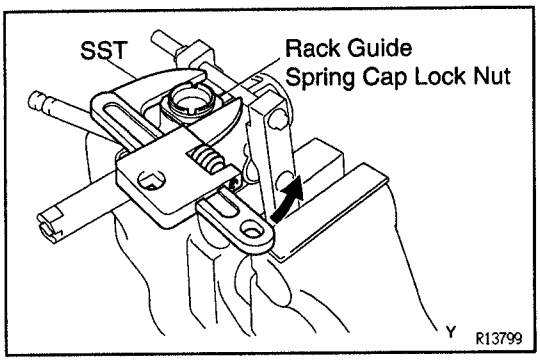

6. REMOVE RACK GUIDE SPRING CAP LOCK NUT

Using SST, remove the nut.

SST 09922–10010

NOTICE: Use SST 09922–10010 in the direction shown in the illustration.

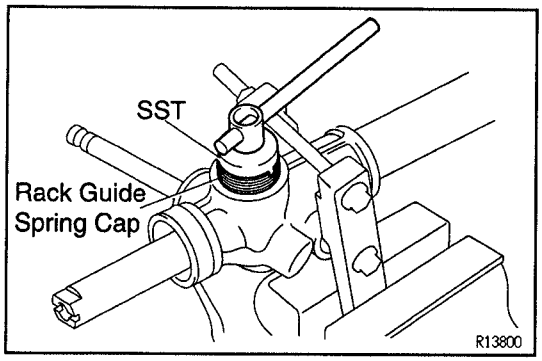

7. REMOVE RACK GUIDE SPRING CAP, RACK GUIDE SPRING, RACK GUIDE AND RACK GUIDE SEAT

(a) Using SST, remove the cap.
SST 09631–10021

(b) Remove the seat from the guide.

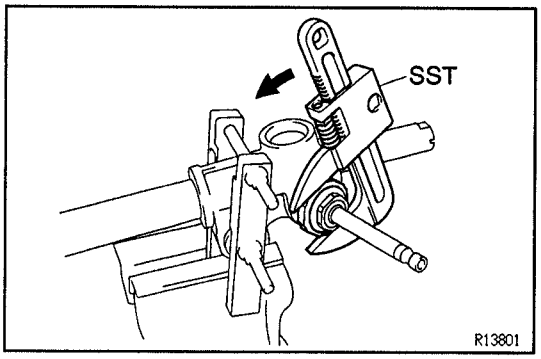

8. REMOVE DUST COVER

9. REMOVE PINION BEARING ADJUSTING SCREW LOCK NUT

Using SST, remove the nut.
SST 09922–10010
NOTICE: Use SST 09922–10010 in the direction shown in the illustration.

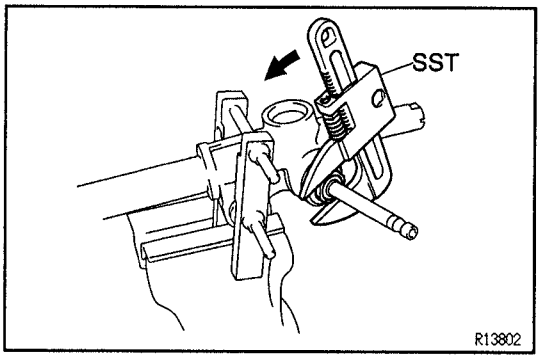

10. REMOVE PINION BEARING ADJUSTING SCREW

Using SST, remove the screw.
SST 09922–10010
NOTICE: Use SST 09922–10010 in the direction shown in the illustration.

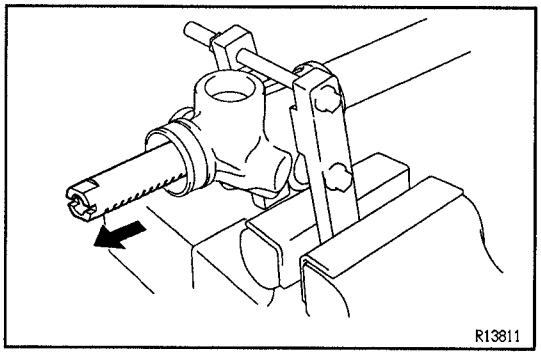

11. REMOVE STEERING PINION ASSEMBLY

(a) Fully pull the steering rack from the pinion housing side of the rack housing and align the cutout portion of the rack with the pinion assembly.

(b) Remove the pinion assembly from the rack housing.

12. REMOVE STEERING RACK

Remove the rack from the rack housing without revolving it.
NOTICE: Remove the rack from the steering pinion housing side of the rack housing, as shown.

SR

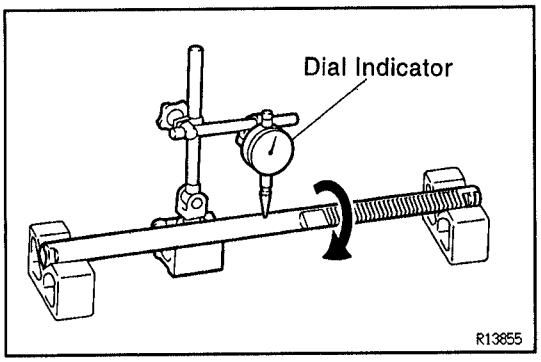

MANUAL STEERING GEAR INSPECTION AND REPLACEMENT

SR1CU-03

NOTICE: When using a vise, do not overtighten it.

1. INSPECT STEERING RACK

(a) Using a dial indicator, check the rack for runout and for teeth wear and damage.

	Runout	mm (in.)
Maximum	0.30 (0.0118)	

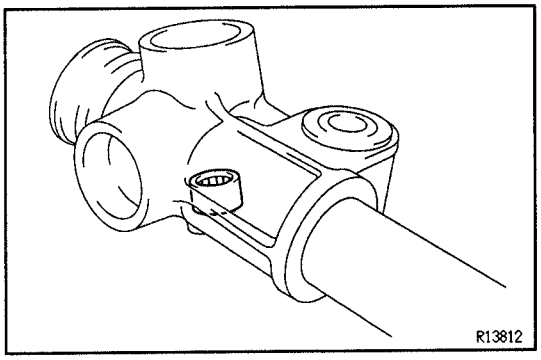

(b) Check the back surface for wear and damage.

2. INSPECT BEARING

(a) Check the needle roller bearing for pitmarks or damage. If faulty, replace the rack housing.

(b) Apply molybdenum disulphide lithium base grease to the inside of the bearing.

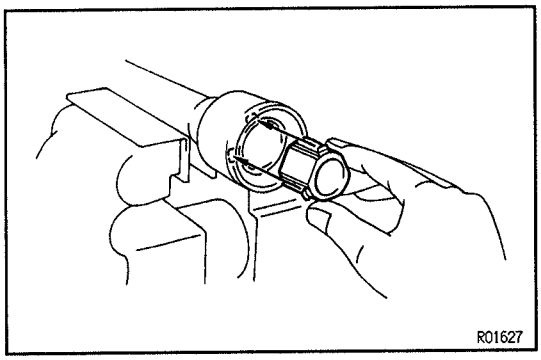

3. IF NECESSARY, REPLACE BUSHING

(a) Using a screwdriver, loosen the 3 claws of the bushing, and remove the bushing from the rack housing.

(b) Coat a new bushing with molybdenum disulphide lithium base grease.

(c) Install the bushing into the rack housing, making sure to align with the 3 holes.

SR

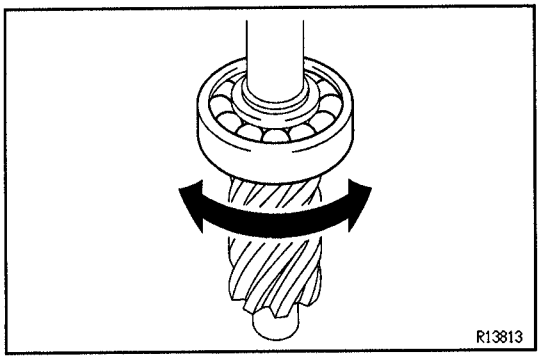

4. INSPECT BEARING

Check the bearing rotation condition and check for abnormal noise.

If the bearing is worn or damaged, replace the steering pinion assembly.

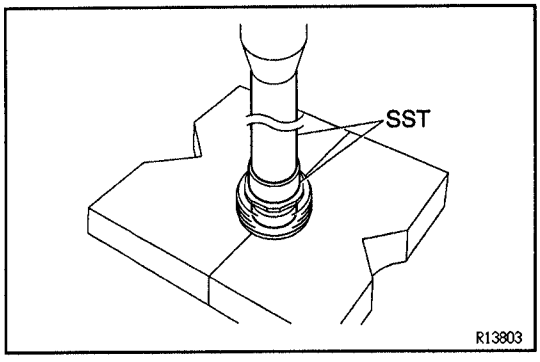

5. IF NECESSARY, REPLACE OIL SEAL

(a) Using SST, press out the oil seal from the pinion bearing adjusting screw.

SST 09950–60010 (09951–00250),
09950–70010 (09951–07100)

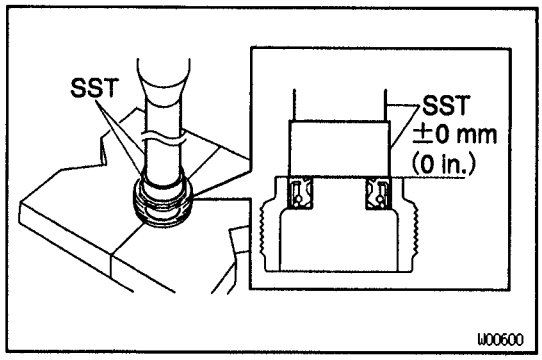

(b) Coat a new oil seal lip with molybdenum disulphide lithium base grease.

(c) Using SST and a press, press in the oil seal until it surface is flush with the pinion bearing adjusting screw.

SST 09950–60010 (09951–00250),
09950–70010 (09951–07100)

NOTICE: Make sure you install the oil seal facing the correct direction.

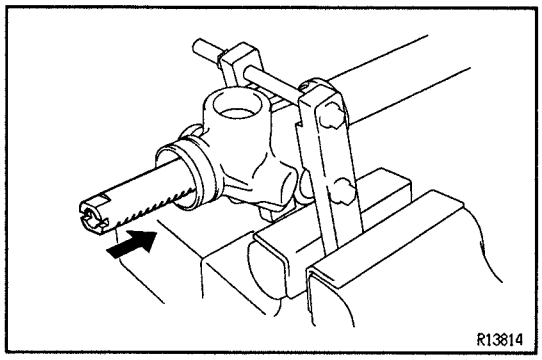

MANUAL STEERING GEAR ASSEMBLY [SR1M0-03]

NOTICE: When using a vise, do not overtighten it.

1. COAT WITH MOLYBDENUM DISULPHIDE LITHIUM BASE GREASE

(See page SR–52)

2. INSTALL STEERING RACK

(a) Install the rack into the rack housing.

NOTICE: Install the rack to the steering pinion housing side of the rack housing as shown.

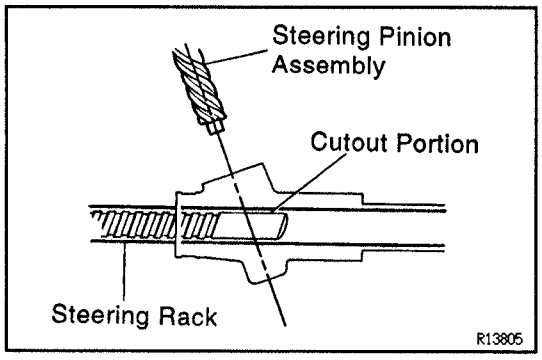

(b) Set the rack notched side so that the pinion can be positioned inside.

3. INSTALL STEERING PINION ASSEMBLY

(a) Line up the cutout portion of the steering rack with the pinion assembly.

(b) Install the pinion assembly into the rack housing.

HINT:

- Ensure that the pinion end is securely located in the bearing of the rack housing.
- Do not engage the pinion teeth with the rack teeth.

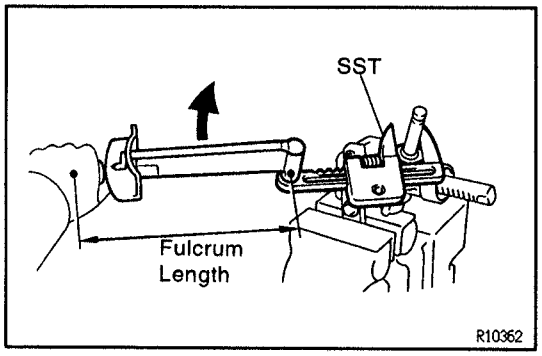

4. INSTALL PINION BEARING ADJUSTING SCREW

(a) Apply sealant to 2 or 3 threads of the screw.

Sealant:

Part No.08833–00080, THREE BOND 1344, LOCTITE 242 or equivalent

(b) Using SST, install the screw.

SST 09922–10010

Torque: 17 N·m (174 kgf·cm, 13 ft·lbf)

NOTICE: Use SST 09922–10010 in the direction shown in the illustration.

HINT: Use a torque wrench with a fulcrum length of 300 mm (11.81 in.).

5. INSTALL PINION BEARING ADJUSTING SCREW LOCK NUT

(a) Apply sealant to 2 or 3 threads of the nut.

Sealant:

Part No.08833–00080, THREE BOND 1344, LOCTITE 242 or equivalent

SR

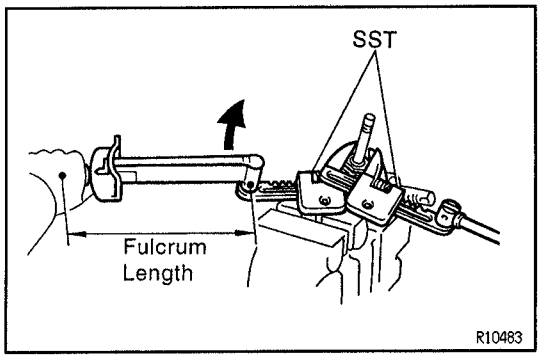

(b) Using SST to stop the pinion bearing adjusting screw, and using SST, torque the nut.
SST 09922–10010
Torque: 88 N·m (894 kgf·cm, 65 ft·lbf)
NOTICE: Use SST 09922–10010 in the direction shown in the illustration.
HINT: Use a torque wrench with a fulcrum length of 425 mm (16.73 in.).

6. INSTALL DUST COVER

7. INSTALL RACK GUIDE SEAT, RACK GUIDE, RACK GUIDE SPRING AND RACK GUIDE SPRING CAP

(a) Install the seat to the guide.

(b) Apply sealant to 2 or 3 threads of the cap.
Sealant:
Part No.08833–00080, THREE BOND 1344, LOCTITE 242 or equivalent

(c) Temporarily install the cap.

8. ADJUST TOTAL PRELOAD

(a) Using SST, torque the rack guide spring cap.
SST 09631–10021
Torque: 25 N·m (250 kgf·cm, 18 ft·lbf)

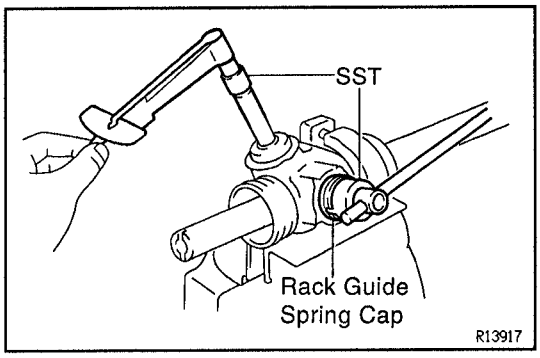

(b) Using SST, while gradually loosening the rack guide spring cap, measure and adjust the preload.
SST 09612–24014 (09616–10010), 09631–10021
Preload (turning):
1.3 N·m (13 kgf·cm, 11.3 in.·lbf) or less
HINT:
- When measuring the preload, measure in several places and check that the values are within standard.
- Make sure that the pinion teeth engage with the rack teeth.

9. INSTALL RACK GUIDE SPRING CAP LOCK NUT

(a) Apply sealant to 2 or 3 threads of the nut.
Sealant:
Part No.08833–00080, THREE BOND 1344, LOCTITE 242 or equivalent

(b) Using SST to stop the rack guide spring cap rotating, and using SST, torque the nut.
SST 09631–10021, 09922–10010
Torque: 50 N·m (513 kgf·cm, 37 ft·lbf)
NOTICE: Use SST 09922–10010 in the direction shown in the illustration.
HINT: Use a torque wrench with a fulcrum length of 345 mm (13.58 in.).

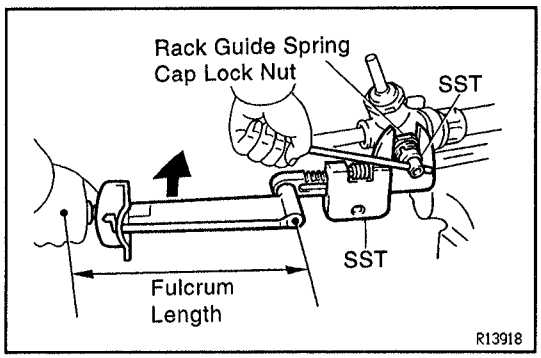

(c) Recheck the total preload.
Preload (turning):
1.3 N·m (13 kgf·cm, 11.3 in.·lbf) or less

SR

10. INSTALL RACK HOUSING NO. 2 BRACKET AND GROMMET

(a) Align the matchmarks on the bracket and rack housing.

(b) Torque the bolt.
Torque: 61 N·m (620 kgf·cm, 45 ft·lbf)

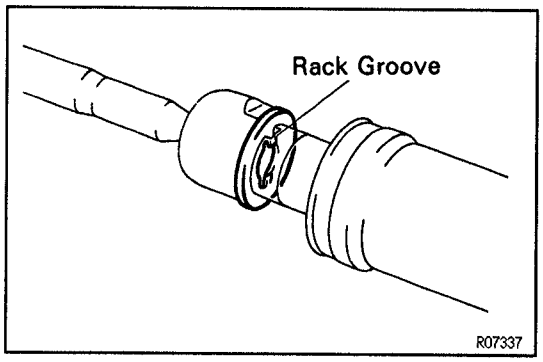

11. INSTALL RH AND LH CLAW WASHERS AND RACK ENDS

(a) Install a new washer, and temporarily tighten the rack end.
HINT: Align the claws of the washer with the steering rack grooves.

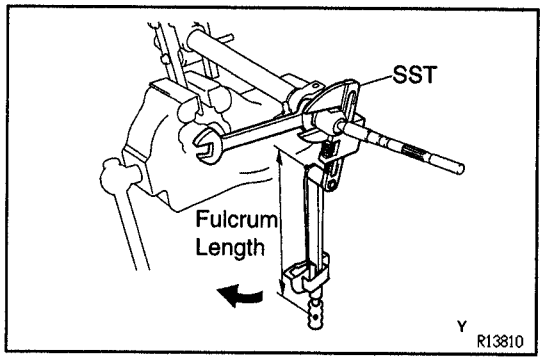

(b) Using a spanner to hold the steering rack steady, and using SST, torque the rack end.
SST 09922–10010
Torque: 61 N·m (621 kgf·cm, 45 ft·lbf)
NOTICE: Use SST 09922–10010 in the direction shown in the illustration.
HINT: Use a torque wrench with a fulcrum length of 345 mm (13.58 in.).

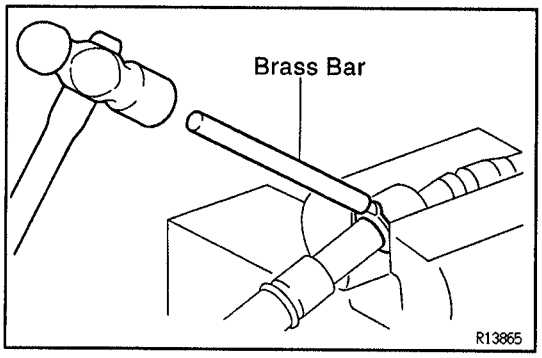

(c) Using a brass bar and hammer, stake the washer.
NOTICE: Avoid any impact to the rack.

12. INSTALL RH AND LH RACK BOOTS, CLAMPS AND CLIPS

(a) Install the rack boot.
NOTICE: Be careful not to damage or twist the boot.

(b) Tighten a new clamp, as shown in the illustration.

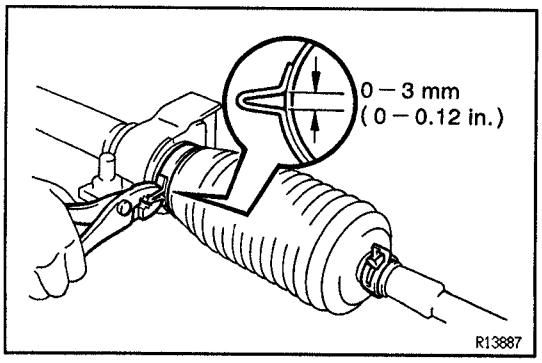

13. INSTALL RH AND LH TIE ROD ENDS AND LOCK NUTS

(a) Screw the lock nut and tie rod end onto the rack end until the matchmarks are aligned.

(b) After adjusting toe–in, torque the nut.
(See page SA–2)
Torque: 47 N·m (480 kgf·cm, 35 ft·lbf)

MANUAL STEERING GEAR INSTALLATION

SR1CW-03

1. **INSTALL MANUAL STEERING GEAR ASSEMBLY**
   Torque the 2 gear assembly set bolts, nuts and washers.
   Torque: 201 N·m (2,050 kgf·cm, 148 ft·lbf)
2. **CONNECT INTERMEDIATE NO. 2 SHAFT**
   (See page SR–22)
3. **CONNECT RH AND LH TIE ROD ENDS**
   (See page SA–70)
4. **POSITION FRONT WHEELS FACING STRAIGHT AHEAD**
   HINT: Do it with the front of the vehicle jacked up.
5. **CENTER SPIRAL CABLE**
   (See page SR–23)
6. **INSTALL STEERING WHEEL**

(a) Align the matchmarks on the wheel and steering column main shaft.
(b) Temporarily tighten the wheel set nut.
(c) Connect the connector.

7. **CHECK STEERING WHEEL CENTER POINT**
8. **TORQUE STEERING WHEEL SET NUT**
   Torque: 35 N·m (357 kgf·cm, 26 ft·lbf)
9. **INSTALL STEERING WHEEL PAD**
   (See page SR–24)
10. **CHECK FRONT WHEEL ALIGNMENT**
    (See page SA–2)

POWER STEERING GEAR (2WD)

COMPONENTS

SR1CX-01

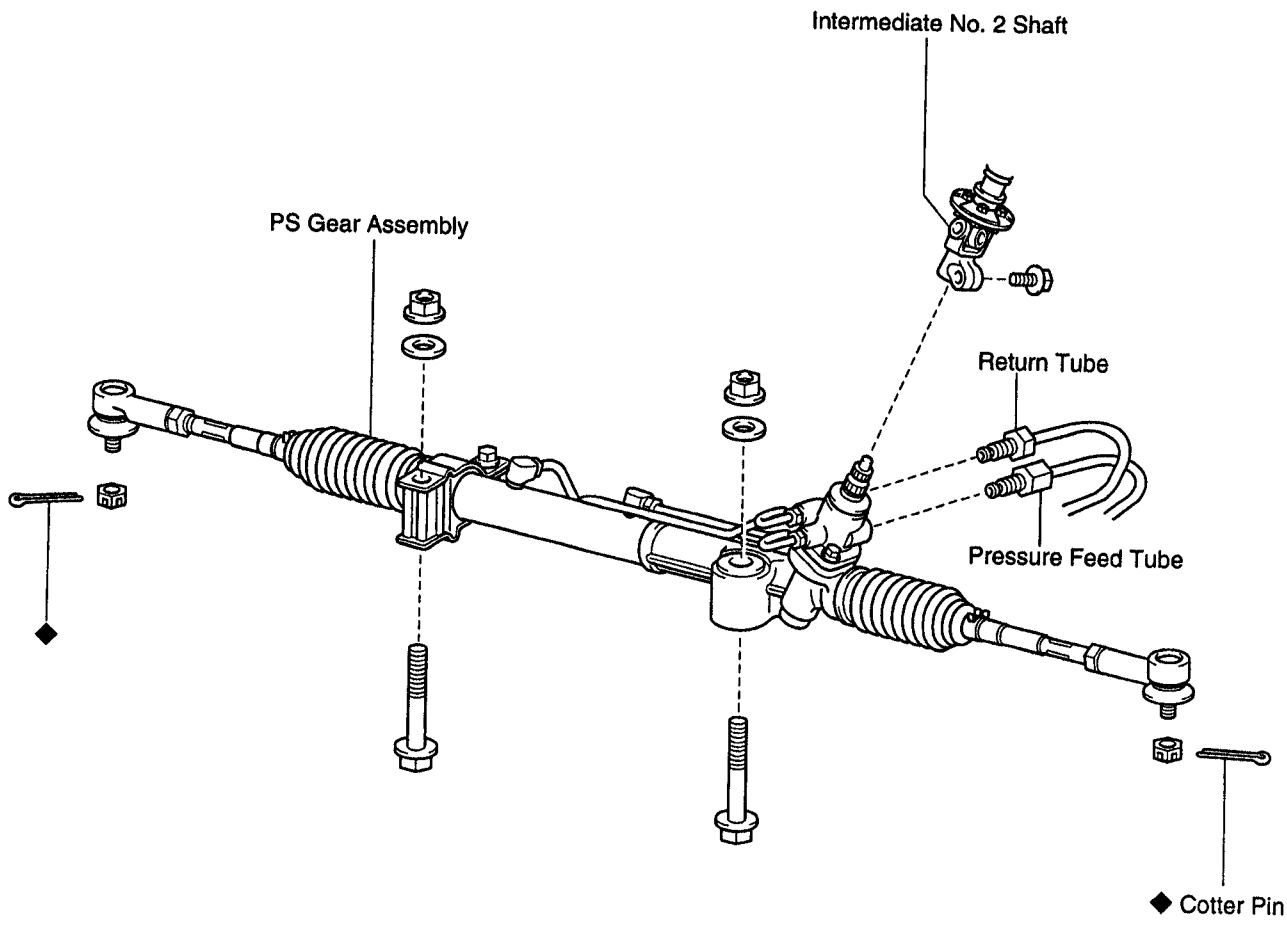

◆ Non-reusable part

Y

R13738

SR1CY-02

COMPONENTS

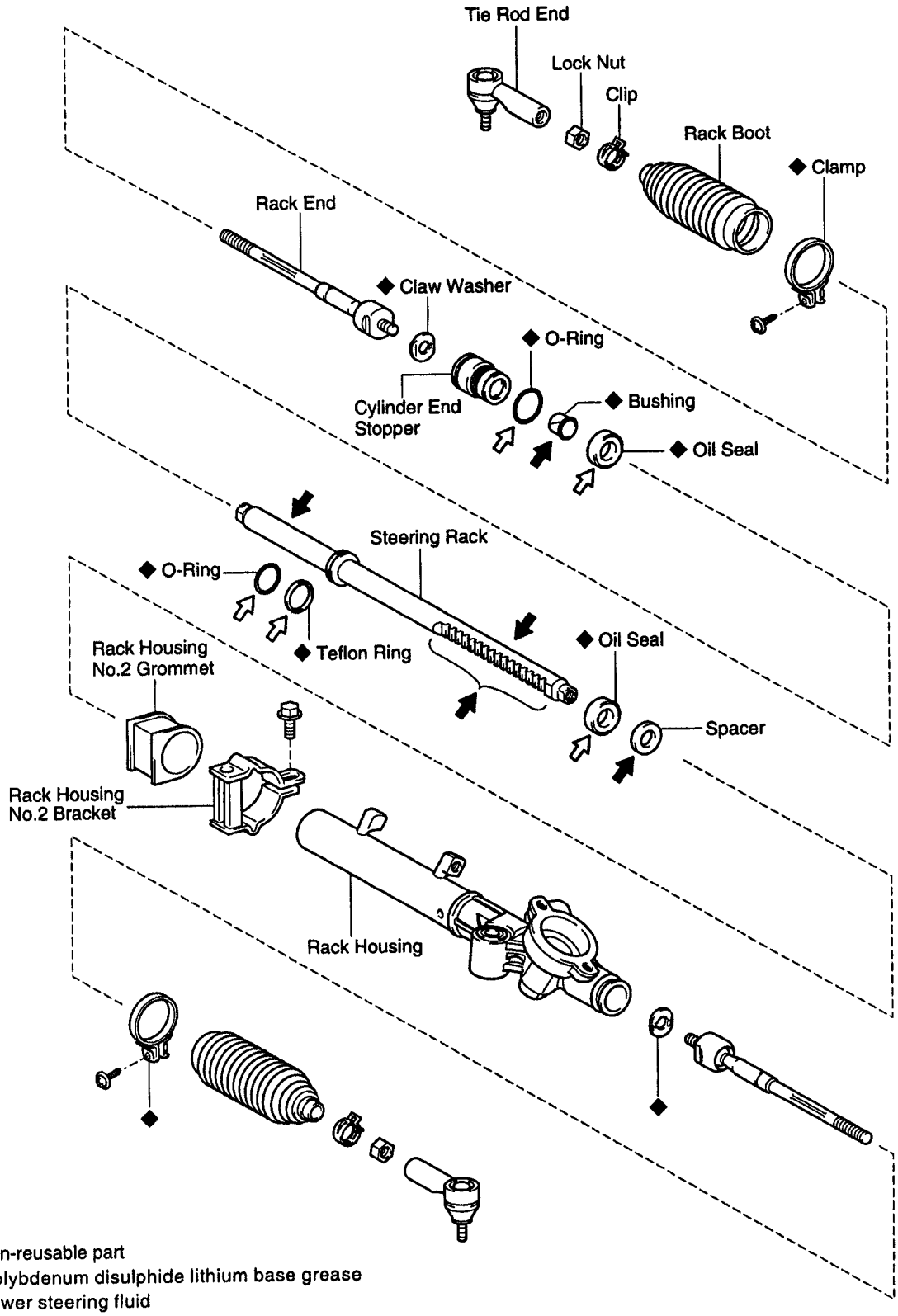

SR

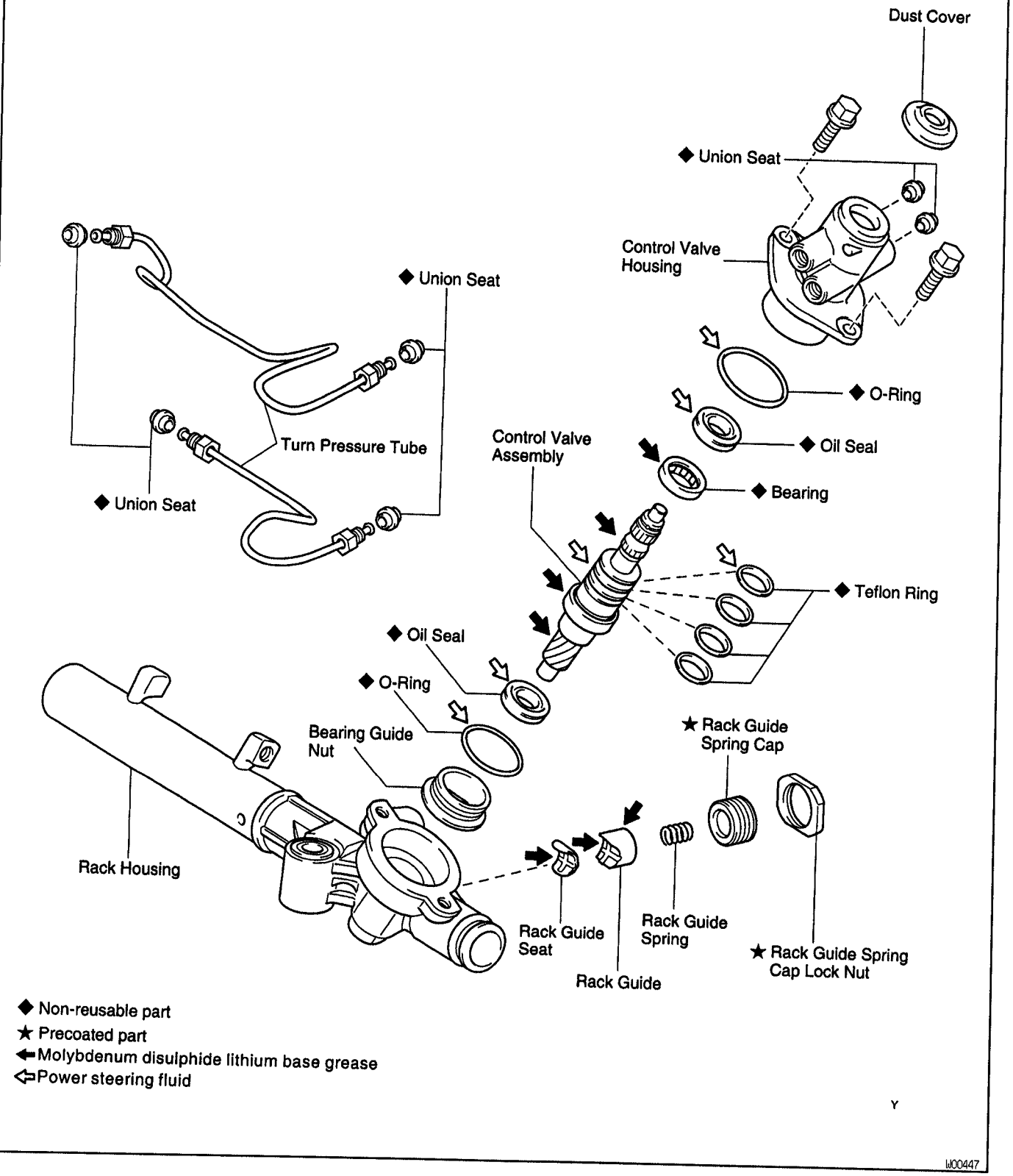
Dust Cover
◆ Union Seat
Control Valve Housing
◆ Union Seat
◆ O-Ring
◆ Oil Seal
Turn Pressure Tube
Control Valve Assembly
◆ Bearing
◆ Union Seat
◆ Teflon Ring
◆ Oil Seal
◆ O-Ring
Bearing Guide Nut
★ Rack Guide Spring Cap
Rack Housing
Rack Guide Seat
Rack Guide Spring
★ Rack Guide Spring Cap Lock Nut
Rack Guide
◆ Non-reusable part
★ Precoated part
Molybdenum disulphide lithium base grease
Power steering fluid
Y
W00447

SR

SR1M7-01

POWER STEERING GEAR REMOVAL

1. **PLACE FRONT WHEELS FACING STRAIGHT AHEAD**
2. **REMOVE STEERING WHEEL PAD**
   (See page SR–16)
3. **REMOVE STEERING WHEEL**
   (See page SR–16)
4. **DISCONNECT RH AND LH TIE ROD ENDS**
   (See page SA–70)
5. **DISCONNECT INTERMEDIATE NO. 2 SHAFT**
   (See page SR–17)
6. **REMOVE PRESSURE FEED TUBE AND RETURN TUBE**
   Using SST, disconnect the tube.
   SST 09631–22020
7. **REMOVE PS GEAR ASSEMBLY**
   Remove the 2 gear assembly set bolts, nuts and washers.

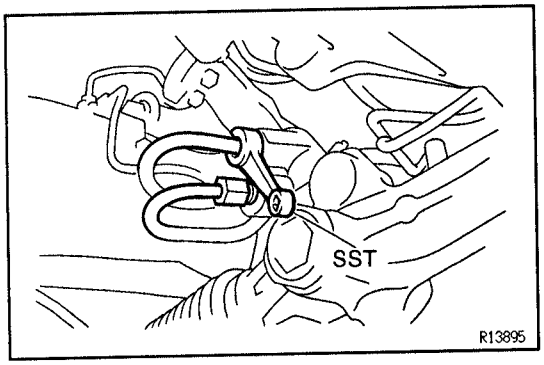

SR1M8-01

POWER STEERING GEAR DISASSEMBLY

NOTICE: When using a vise, do not overtighten it.

1. **REMOVE 2 TURN PRESSURE TUBES**

(a) Using SST, remove the tube.
SST 09633–00020

(b) Remove the union seat from the rack housing.

(c) Remove the union seat from the control valve housing.

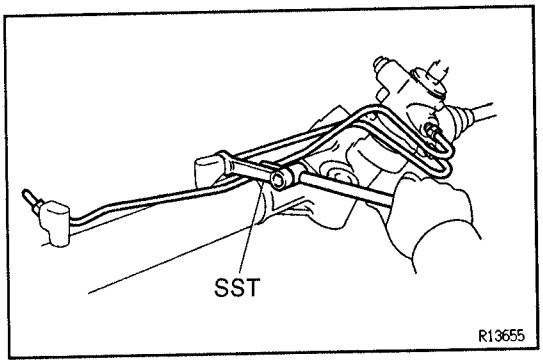

2. **SECURE PS GEAR ASSEMBLY IN VISE**
   Using SST, secure the gear assembly in a vise.
   SST 09612–00012

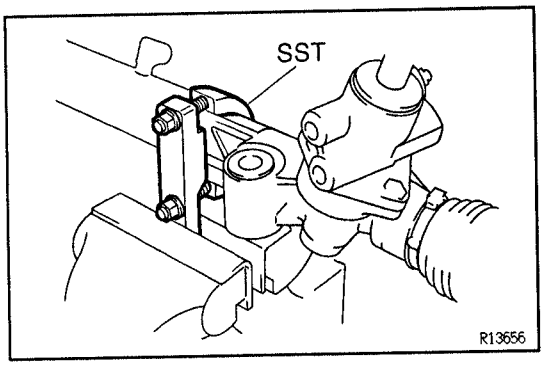

3. **REMOVE RH AND LH TIE ROD ENDS AND LOCK NUTS**
   Place matchmarks on the tie rod end and rack end.
4. **REMOVE RH AND LH CLIPS, RACK BOOTS AND CLAMPS**
   NOTICE:
   - **Be careful not to damage the boot.**
   - **Mark the RH and LH boots.**

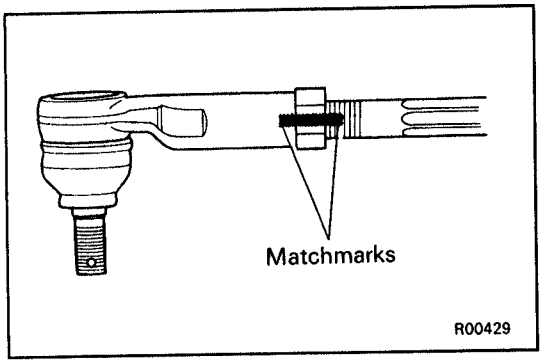

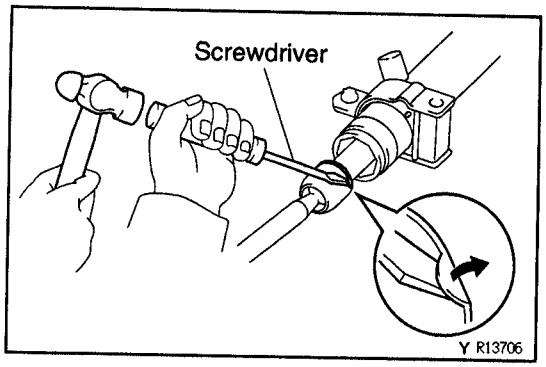

5. REMOVE RH AND LH RACK ENDS AND CLAW WASHERS

(a) Using a screwdriver and hammer, unstake the washer.
NOTICE: Avoid any impact to the steering rack.

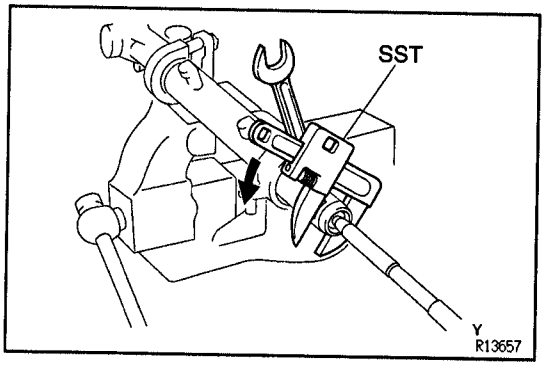

(b) Using a spanner to hold the steering rack steady, and using SST, remove the rack end.
SST 09922–10010
NOTICE:
- **Use SST 09922–10010 in the direction shown in the illustration.**
- **Mark the RH and LH rack ends.**

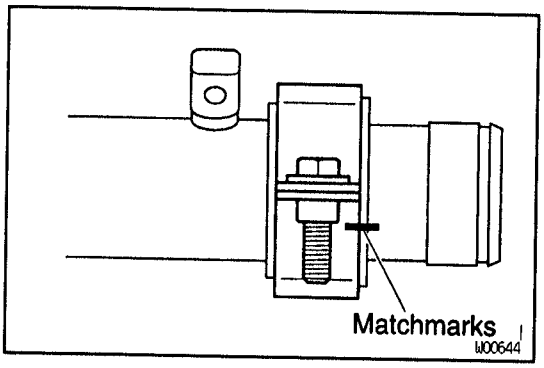

6. REMOVE RACK HOUSING NO. 2 BRACKET AND GROMMET

(a) Place matchmarks on the bracket and rack housing.
(b) Remove the bolt.

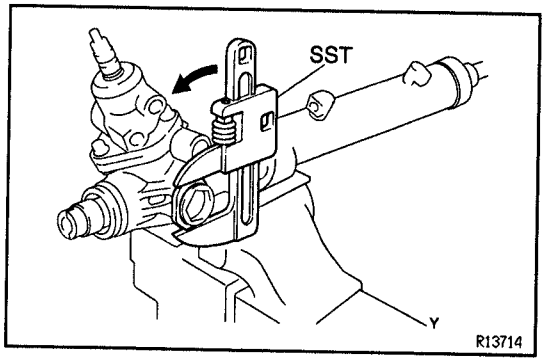

7. REMOVE RACK GUIDE SPRING CAP LOCK NUT
Using SST, remove the nut.
SST 09922–10010
NOTICE: Use SST 09922–10010 in the direction shown in the illustration.

8. REMOVE RACK GUIDE SPRING CAP
Using a hexagon wrench (24 mm), remove the cap.

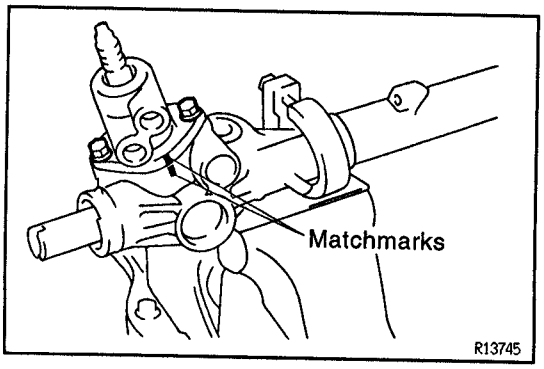

9. REMOVE RACK GUIDE SPRING, RACK GUIDE AND RACK GUIDE SEAT
Remove the seat from the guide.

10. REMOVE DUST COVER

11. REMOVE CONTROL VALVE HOUSING WITH CONTROL VALVE ASSEMBLY

(a) Place matchmarks on the valve housing and rack housing.
(b) Remove the 2 bolts.

SR

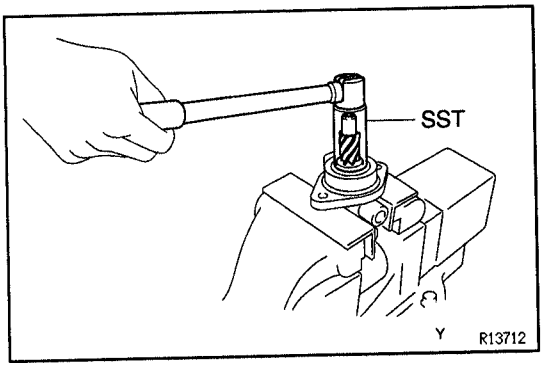

(c) Pull out the control valve assembly with the valve housing.

(d) Remove the O–ring from the rack housing.

12. REMOVE CONTROL VALVE ASSEMBLY

(a) Using SST, loosen the bearing guide nut.
SST 09631–20060

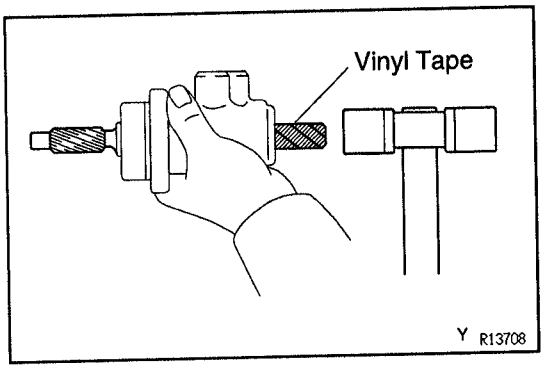

(b) Wind vinyl tape to the control valve shaft.

(c) Using a plastic hammer, tap out the valve assembly with the nut from the control valve housing.
NOTICE: Be careful not to damage the oil seal lip.

(d) Remove the nut from the valve assembly.
NOTICE: Be careful not to damage the oil seal lip.

(e) Remove the O–ring from the nut.

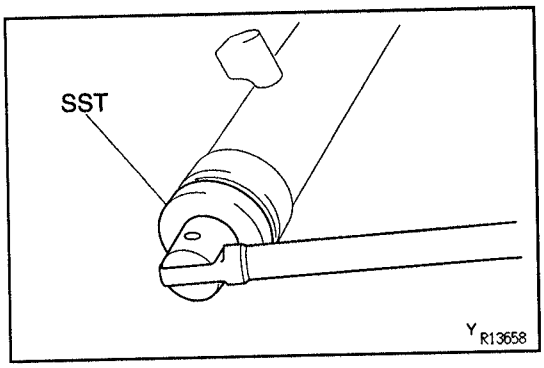

13. REMOVE CYLINDER END STOPPER

(a) Using SST, remove the stopper.
SST 09631–20090

(b) Remove the O–ring from the stopper.

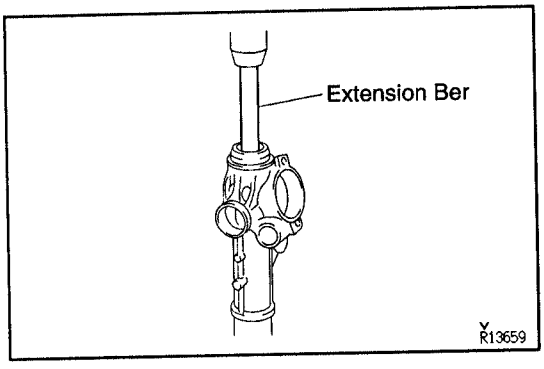

14. REMOVE STEERING RACK AND OIL SEAL

(a) Using an extension bar and socket wrench, press out the rack and oil seal.
NOTICE: Take care not to drop the rack.

(b) Remove the oil seal from the rack.

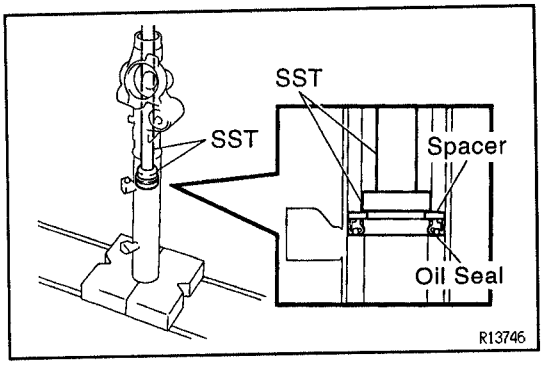

15. REMOVE OIL SEAL AND SPACER

Using SST, press out the oil seal and spacer.
SST 09950–60010 (09951–00280),
09950–70010 (09951–07360)

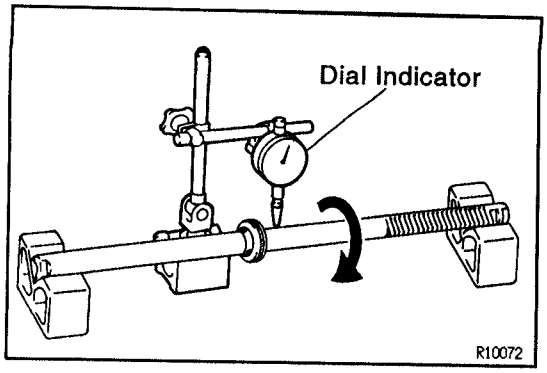

POWER STEERING GEAR INSPECTION AND REPLACEMENT

SR1D1-02

1. INSPECT STEERING RACK

(a) Using a dial indicator, check the rack for runout and for teeth wear and damage.

2WD and 4WD:

	Runout mm (in.)
Maximum	0.30 (0.0118)

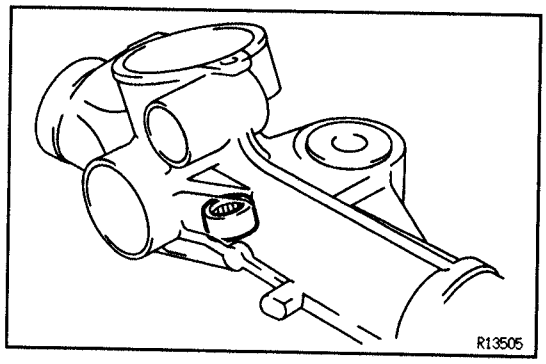

(b) Check the back surface for wear and damage.

2. INSPECT BEARING

(a) Check the needle roller bearing for pitmarks or damage. If faulty, replace the rack housing.

(b) Apply molybdenum disulphide lithium base grease to the inside of the bearing.

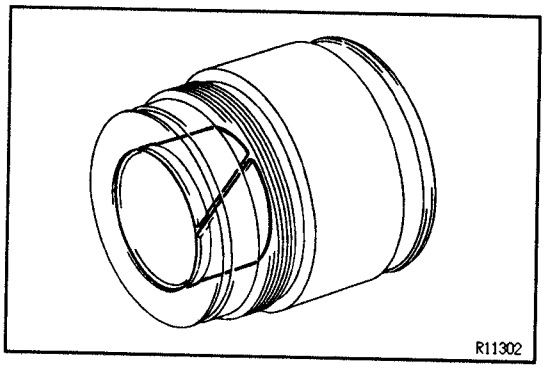

3. INSPECT BUSHING

(a) Check the inside of the bushing of the cylinder end stopper for cracks. If faulty, replace the bushing.

(b) Apply molybdenum disulphide lithium base grease to the inside of the bushing.

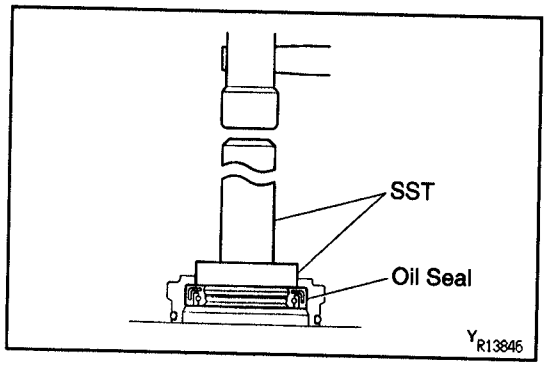

4. IF NECESSARY, REPLACE OIL SEAL

(a) Using SST and a hammer, tap out the oil seal from the bearing guide nut.

SST 09950–60010 (09951–00320),
09950–70010 (09951–07100)

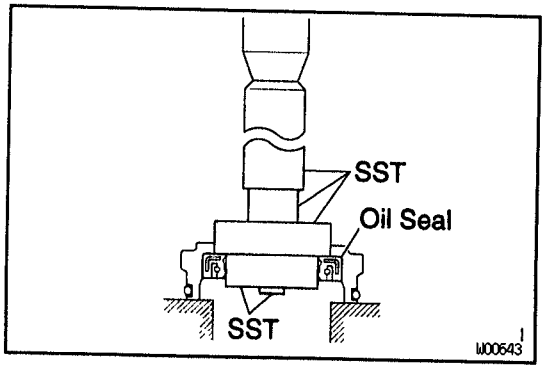

(b) Coat a new oil seal lip with power steering fluid.

(c) Using SST, press in the oil seal.

SST 09950–60010 (09951–00280, 09951–00360, 09952–06010),
09950–70010 (09951–07100)

NOTICE: Make sure you install the oil seal facing the correct direction.

SR

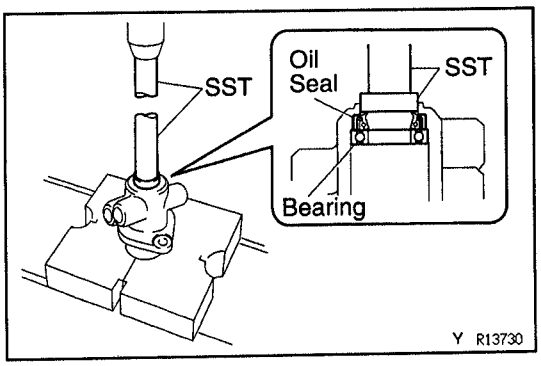

5. IF NECESSARY, REPLACE OIL SEAL AND BEARING

(a) Using SST, press out the oil seal and bearing from the control valve housing.
SST 09950–60010 (09951–00260),
09950–70010 (09951–07150)

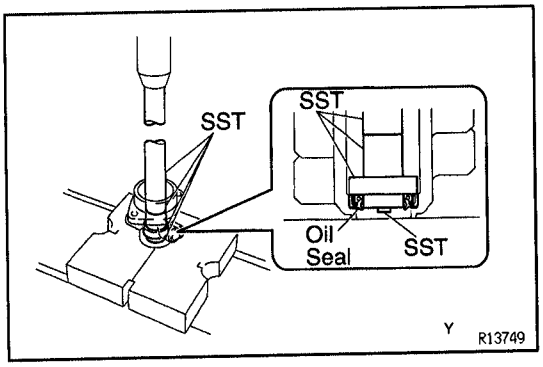

(b) Coat a new oil seal lip with power steering fluid.
(c) Using SST, press in the oil seal.
SST 09950–60010 (09951–00180, 09951–00330,
09952–06010),
09950–70010 (09951–07150)
NOTICE: Make sure you install the oil seal facing the correct direction.

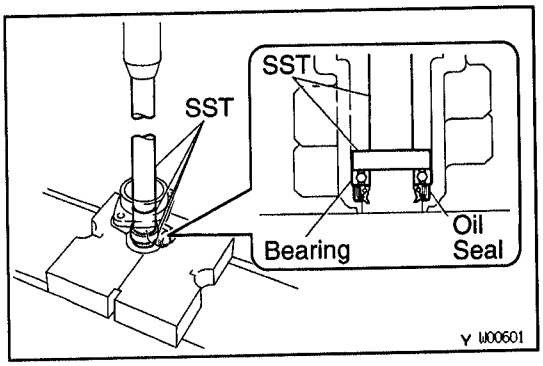

(d) Coat a new bearing with molybdenum disulphide lithium base grease.
(e) Using SST, press in the bearing.
SST 09950–60010 (09951–00330),
09950–70010 (09951–07150)

SR

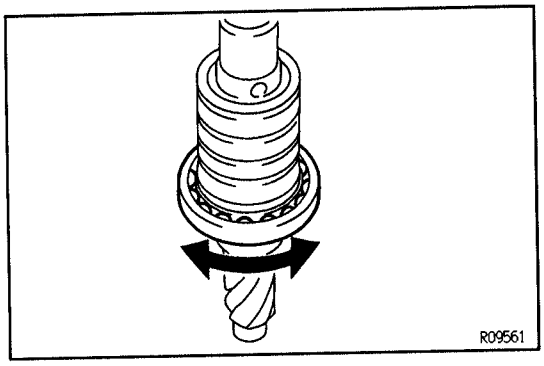

6. INSPECT BEARING

Check the bearing rotation condition and check for abnormal noise.
If the bearing is worn or damaged, replace the control valve assembly.

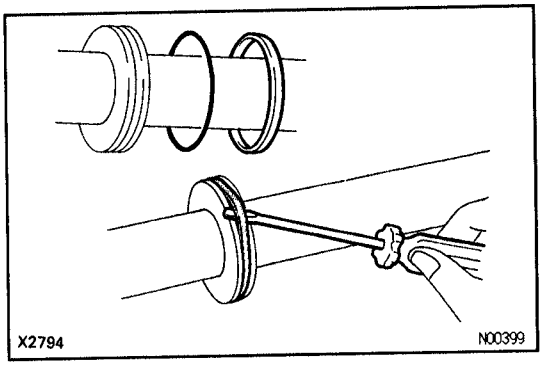

7. IF NECESSARY, REPLACE TEFLON RING AND O–RING

(a) Using a screwdriver, remove the teflon ring and O–ring from the steering rack.
NOTICE: Be careful not to damage the groove for the ring.
(b) Coat a new O–ring with power steering fluid and install it.

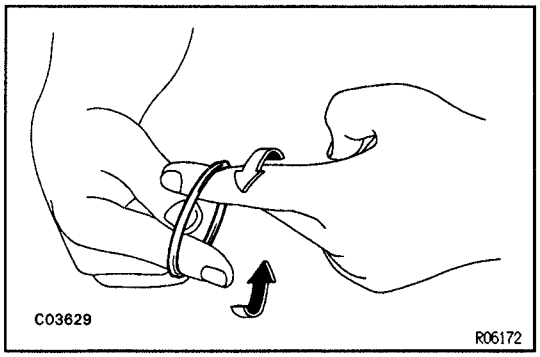

(c) Expand a new teflon ring with your fingers.
NOTICE: Be careful not to overexpand the ring.

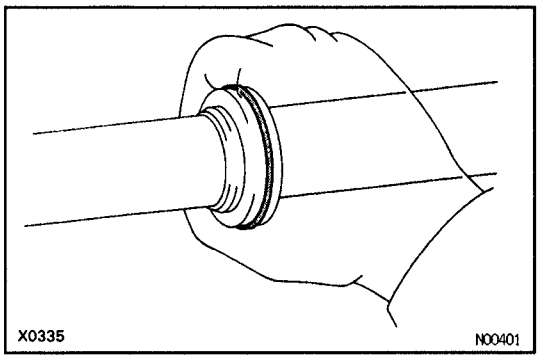

(d) Coat the ring with power steering fluid.
(e) Install the ring to the rack, and snug it down with your fingers.

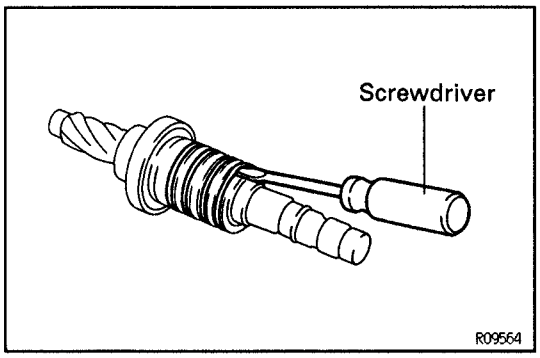

8. IF NECESSARY, REPLACE TEFLON RINGS
(a) Using a screwdriver, remove the 4 rings from the control valve assembly.
NOTICE: Be careful not to damage the grooves for the ring.
(b) Expand 4 new rings with your fingers.
NOTICE: Be careful not to overexpand the ring.
(c) Coat the rings with power steering fluid.

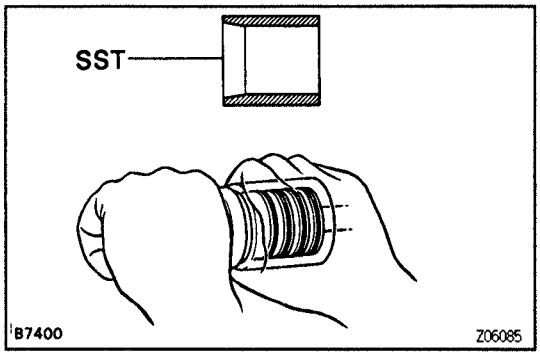

(d) Install the rings to the control valve assembly, and snug them down with your fingers.
(e) Carefully slide the tapered end of SST over the rings to seat them.
SST 09631 – 20081
NOTICE: Be careful not to damage the rings.

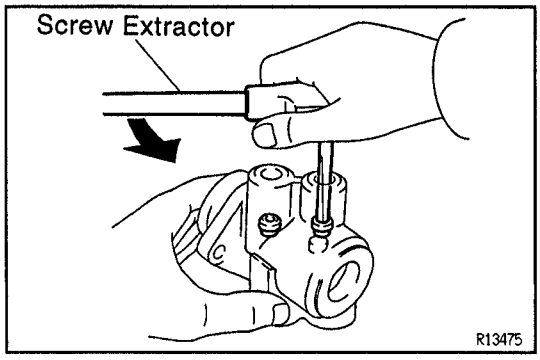

9. IF NECESSARY, REPLACE UNION SEATS
(a) Using a screw extractor, remove the 2 seats from the control valve housing.

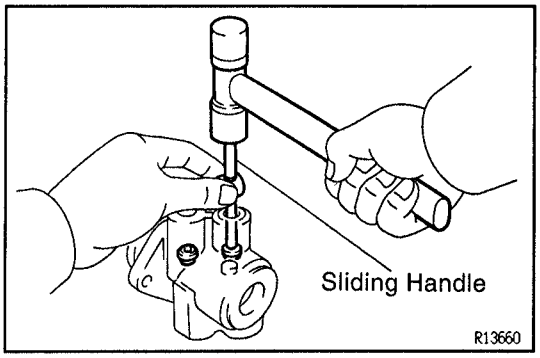

(b) Using a plastic hammer and sliding handle, lightly tap in 2 new seats.
NOTICE: Before installing the union seat, remove dust sticking to the control valve housing.

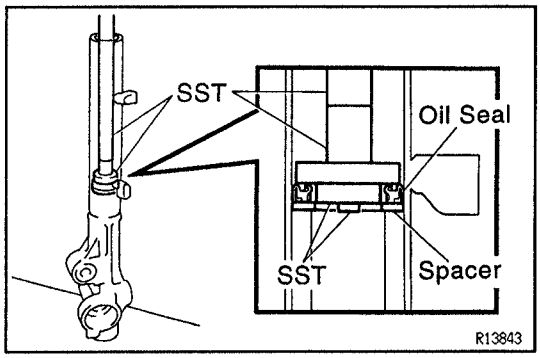

POWER STEERING GEAR ASSEMBLY

SR1M9-01

NOTICE: When using a vise, do not overtighten it.

1. COAT WITH POWER STEERING FLUID OR MOLYBDENUM DISULPHIDE LITHIUM BASE GREASE
(See pages SR–62 and 63)

2. INSTALL SPACER AND OIL SEAL

(a) Coat a new oil seal lip with power steering fluid.

(b) Using SST, press in the oil seal and spacer.
SST 09950–60010 (09951–00250, 09951–00420, 09952–06010),
09950–70010 (09951–07360)

NOTICE:
- **Make sure you install the oil seal facing the correct direction.**
- **Take care that the oil seal does not get reversed as you install it.**

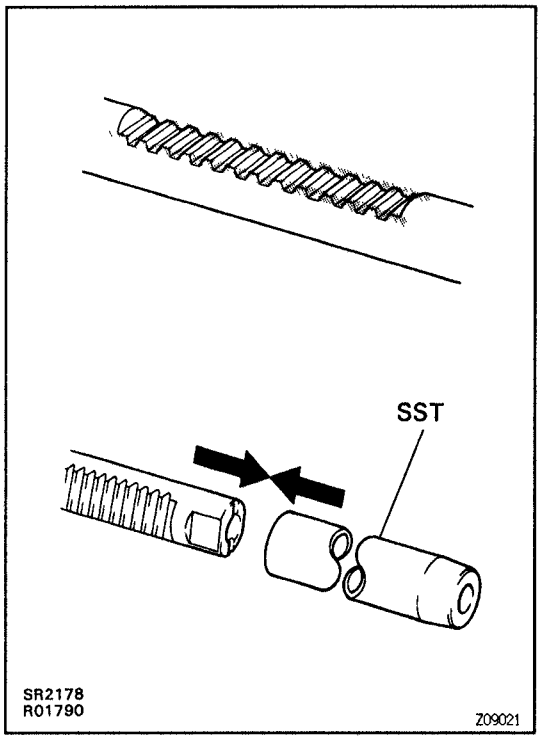

3. INSTALL STEERING RACK

(a) Install SST to the rack.
SST 09631–20102
HINT: If necessary, scrape the burrs off the rack teeth end and burnish.

(b) Coat SST with power steering fluid.

(c) Install the rack into the rack housing.

(d) Remove the SST.

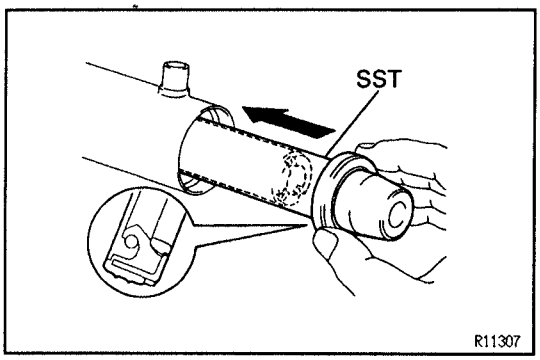

4. INSTALL OIL SEAL

(a) Install SST to the steering rack opposite end.
SST 09631–20102

(b) Coat SST with power steering fluid.

(c) Coat a new oil seal lip with power steering fluid.

(d) Install the oil seal by pushing it onto the SST without tilting.
NOTICE: Make sure you install the oil seal facing the correct direction.

(e) Remove the SST.

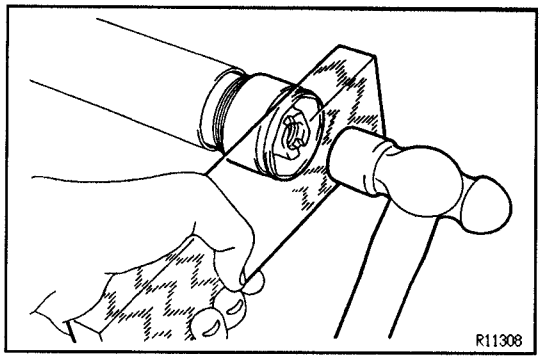

5. INSTALL CYLINDER END STOPPER

(a) Coat a new O–ring with power steering fluid, and install it to the stopper.

(b) Using a wooden block and hammer, drive in the stopper until it is tightly installed.

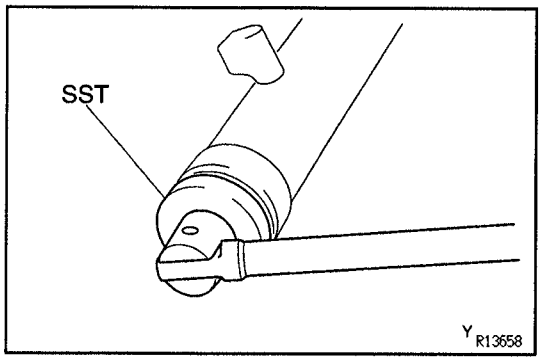

(c) Using SST, torque the stopper.
SST 09631–20090
Torque: 59 N·m (600 kgf·cm, 43 ft·lbf)

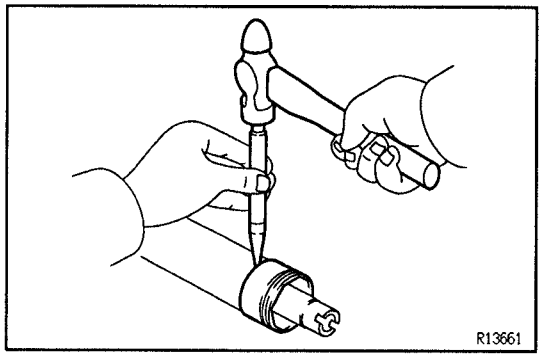

(d) Using a punch and hammer, stake the rack housing.

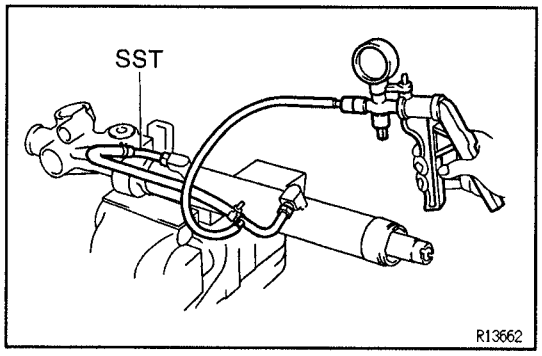

6. AIR TIGHTNESS TEST

(a) Install SST to the unions of the rack housing.
SST 09631–12071

(b) Apply 53 kPa (400 mmHg, 15.75 in.Hg) of vacuum for about 30 seconds.

(c) Check that there is no change in the vacuum.
If there is change in the vacuum, check the installation of the oil seals.

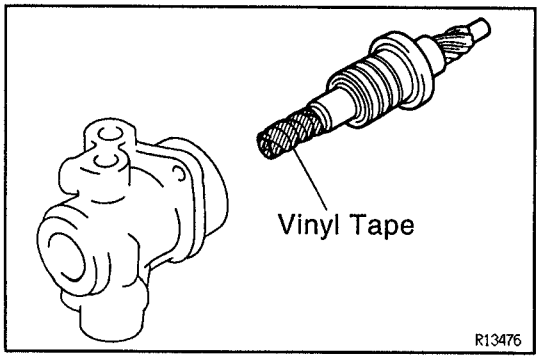

7. INSTALL CONTROL VALVE ASSEMBLY

(a) Coat the teflon rings with power steering fluid.

(b) To prevent oil seal lip damage, wind vinyl tape on the serrated part of the control valve shaft.

(c) Push the valve assembly into the control valve housing.
NOTICE: Be careful not to damage the teflon rings and oil seal lip.

SR

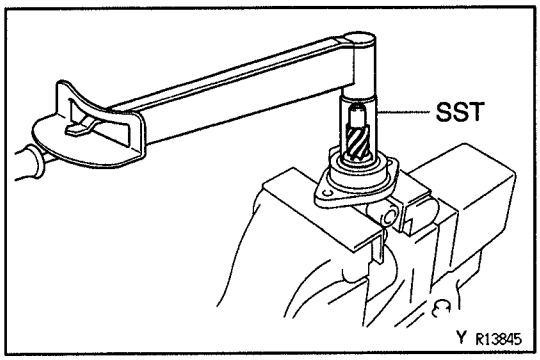

(d) Coat a new O–ring with power steering fluid, and install it to the bearing guide nut.

(e) Using SST, torque the nut.
SST 09631–20060
Torque:
2WD and 4WD: 25 N·m (250 kgf·cm, 18 ft·lbf)
NOTICE: Be careful not to damage the oil seal lip.

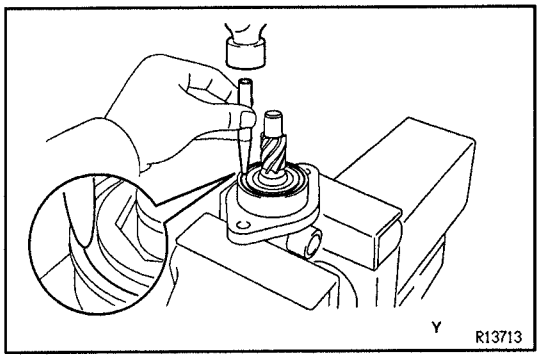

(f) Using a punch, stake the nut.

8. INSTALL CONTROL VALVE HOUSING WITH CONTROL VALVE ASSEMBLY

(a) Coat a new O–ring with power steering fluid, and install it to the valve housing.

(b) Align the matchmarks on the valve housing and rack housing, and install the valve housing with the valve assembly to the rack housing.

(c) Torque the 2 bolts.
Torque:
2WD and 4WD: 18 N·m (185 kgf·cm, 13 ft·lbf)

9. INSTALL DUST COVER

10. INSTALL RACK GUIDE SEAT, RACK GUIDE, RACK GUIDE SPRING AND RACK GUIDE SPRING CAP

(a) Install the seat to the guide.

(b) Apply sealant to 2 or 3 threads of the cap.
Sealant:
Part No. 08833–00080, THREE BOND 1344, LOCTITE 242 or equivalent

(c) Temporarily install the cap.

SR

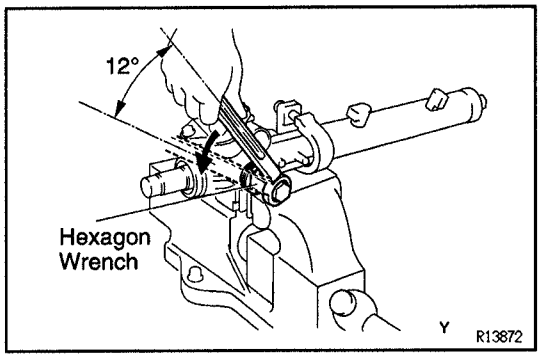

11. ADJUST TOTAL PRELOAD

(a) Using a hexagon wrench (24 mm), torque the rack guide spring cap.
Torque: 25 N·m (250 kgf·cm, 18 ft·lbf)

(b) Using a hexagon wrench (24 mm), return the cap 12°.

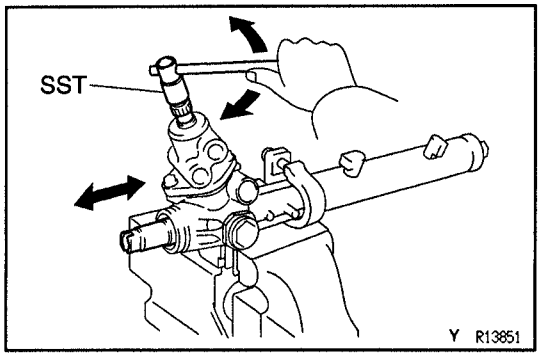

(c) Using SST, turn the control valve shaft right and left 1 or 2 times.
SST 09616–00010

(d) Using a hexagon wrench (24 mm), loosen the cap until the rack guide spring is not functioning.

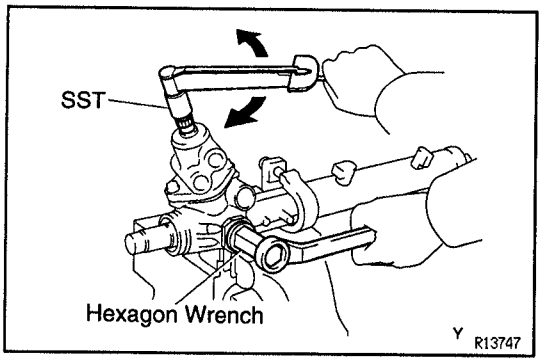

(e) Using SST and a torque wrench, tighten the cap until the preload is within specification.
SST 09616–00010
Preload (turning):
0.5–1.6 N·m (5–16.5 kgf·cm, 4.3–14.3 in.·lbf)

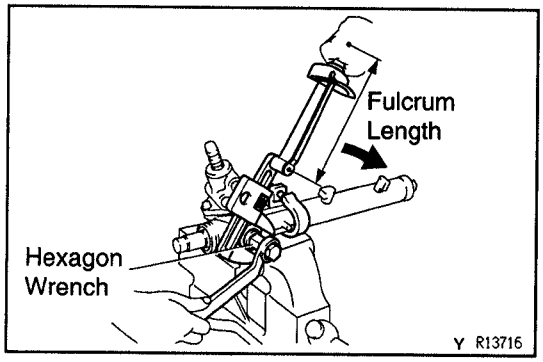

12. INSTALL RACK GUIDE SPRING CAP LOCK NUT

(a) Apply sealant to 2 or 3 threads of the nut.
Sealant:
Part No.08833–00080, THREE BOND 1344, LOCTITE 242 or equivalent

(b) Using a hexagon wrench (24 mm) to hold the rack guide spring cap and using SST, torque the nut.
SST 09922–10010
Torque: 50 N·m (513 kgf·cm, 37 ft·lbf)
NOTICE: Use SST 09922–10010 in the direction shown in the illustration.
HINT: Use a torque wrench with a fulcrum length of 345 mm (13.58 in.).

(c) Recheck the total preload.
Preload (turning):
0.5–1.6 N·m (5–16.5 kgf·cm, 4.3–14.3 in.·lbf)

13. INSTALL RACK HOUSING NO. 2 BRACKET AND GROMMET

(a) Align the matchmarks on the bracket and rack housing.

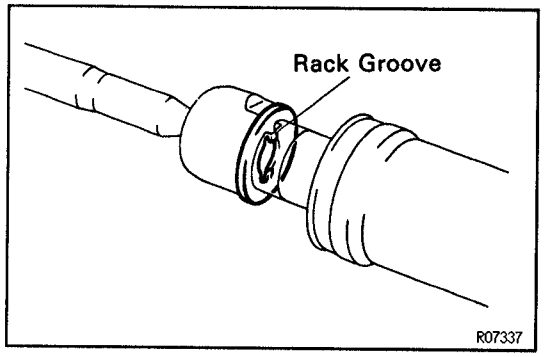

(b) Torque the bolt.
Torque: 39 N·m (400 kgf·cm, 29 ft·lbf)

14. INSTALL RH AND LH CLAW WASHERS AND RACK ENDS

(a) Install a new washer, and temporarily tighten the rack end.
HINT: Align the claws of the washer with the steering rack grooves.

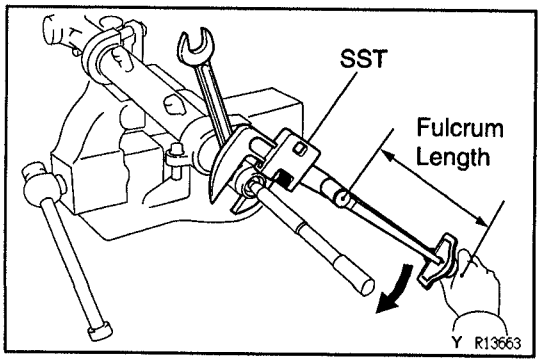

(b) Using a spanner to hold the steering rack steady, and using SST, torque the rack end.
SST 09922–10010
Torque: 75 N·m (762 kgf·cm, 55 ft·lbf)
NOTICE: Use SST 09922–10010 in the direction shown in the illustration.
HINT: Use a torque wrench with a fulcrum length of 345 mm (13.58 in.).

SR

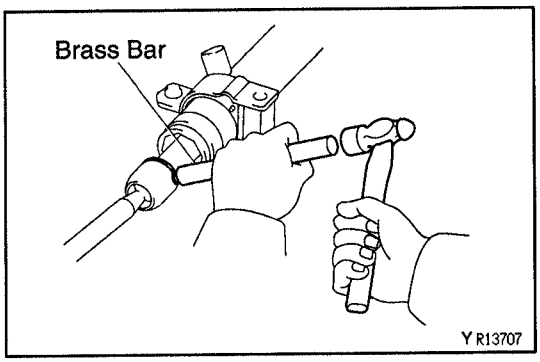

(c) Using a brass bar and hammer, stake the washer.
NOTICE: Avoid any impact to the rack.

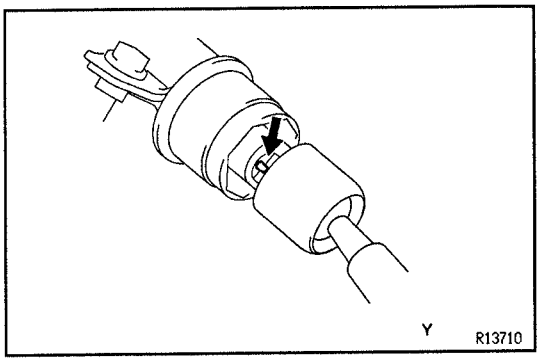

15. INSTALL RH AND LH RACK BOOTS, CLAMPS AND CLIPS

(a) Ensure that the tube hole is not clogged with grease.
HINT: If the tube hole is clogged, the pressure inside the boot will change after it is assembled and the steering wheel is turned.

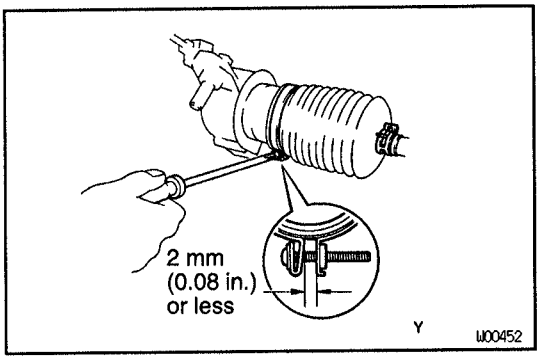

(b) Install the boot.
NOTICE: Be careful not to damage or twist the boot.

(c) Tighten a new clamp, as shown in the illustration.

SR

16. INSTALL RH AND LH TIE ROD ENDS AND LOCK NUTS

(a) Screw the lock nut and tie rod end onto the rack end until the matchmarks are aligned.

(b) After adjusting toe–in, torque the nut.
(2WD: See page SA–2)
(4WD: See page SA–8)
Torque:
2WD: 54 N·m (550 kgf·cm, 40 ft·lbf)
4WD: 55 N·m (560 kgf·cm, 41 ft·lbf)

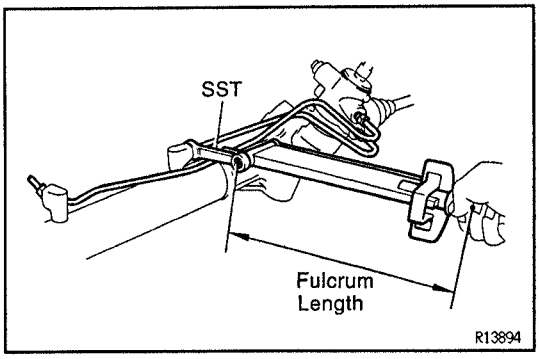

17. INSTALL 2 TURN PRESSURE TUBES

(a) Install a new union seat to the rack housing.

(b) Install a new union seat to the control valve housing.

(c) Using SST, install the tube.
SST 09633–00020
Torque: 20 N·m (203 kgf·cm, 15 ft·lbf)
HINT: Use a torque wrench with a fulcrum length of 300 mm (11.81 in.).

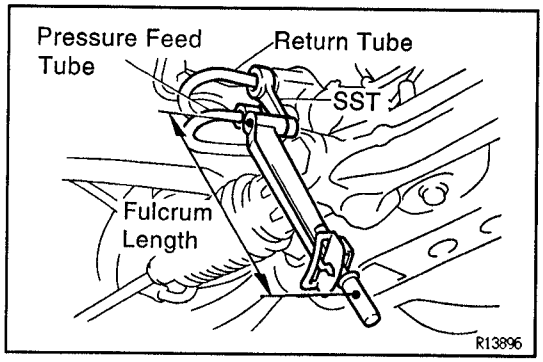

POWER STEERING GEAR INSTALLATION SR1D3-02

1. **INSTALL PS GEAR ASSEMBLY**
   Torque the 2 gear assembly set bolts, nuts and washers.
   Torque: 201 N·m (2,050 kgf·cm, 148 ft·lbf)
2. **CONNECT PRESSURE FEED TUBE AND RETURN TUBE**
   Using SST, connect the tube.
   SST 09631–22020
   Torque:
   Pressure feed tube: 36 N·m (365 kgf·cm, 26 ft·lbf)
   Return tube: 40 N·m (405 kgf·cm, 29 ft·lbf)
   HINT: Use a torque wrench with a fulcrum length of 300 mm (11.81 in.).
3. **CONNECT INTERMEDIATE NO. 2 SHAFT**
   (See page SR–22)
4. **CONNECT RH AND LH TIE ROD ENDS**
   (See page SA–70)
5. **POSITION FRONT WHEELS FACING STRAIGHT AHEAD**
   HINT: Do it with the front of the vehicle jacked up.
6. **CENTER SPIRAL CABLE**
   (See page SR–23)
7. **INSTALL STEERING WHEEL**
   (a) Align the matchmarks on the wheel and steering column main shaft.
   (b) Temporarily tighten the wheel set nut.
   (c) Connect the connector.
8. **BLEED POWER STEERING SYSTEM**
   (See page SR–9)
9. **CHECK STEERING WHEEL CENTER POINT**
10. **TORQUE STEERING WHEEL SET NUT**
    Torque: 35 N·m (357 kgf·cm, 26 ft·lbf)
11. **INSTALL STEERING WHEEL PAD**
    (See page SR–24)
12. **CHECK FRONT WHEEL ALIGNMENT**
    (See page SA–2)

POWER STEERING GEAR (4WD)

COMPONENTS

SR1D4–01

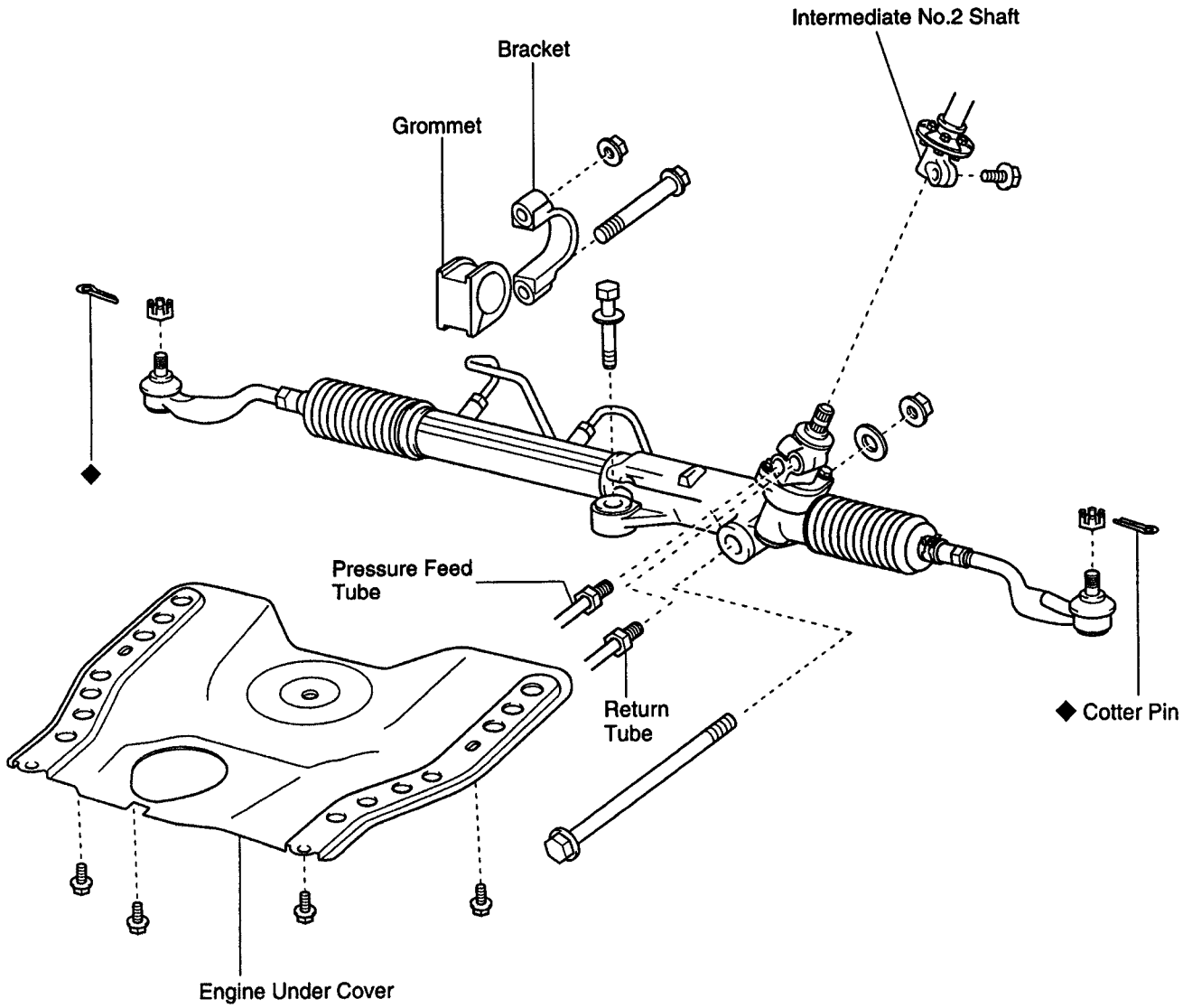

◆ Non-reusable part

Y R13741

SR

COMPONENTS

SR1D5-02

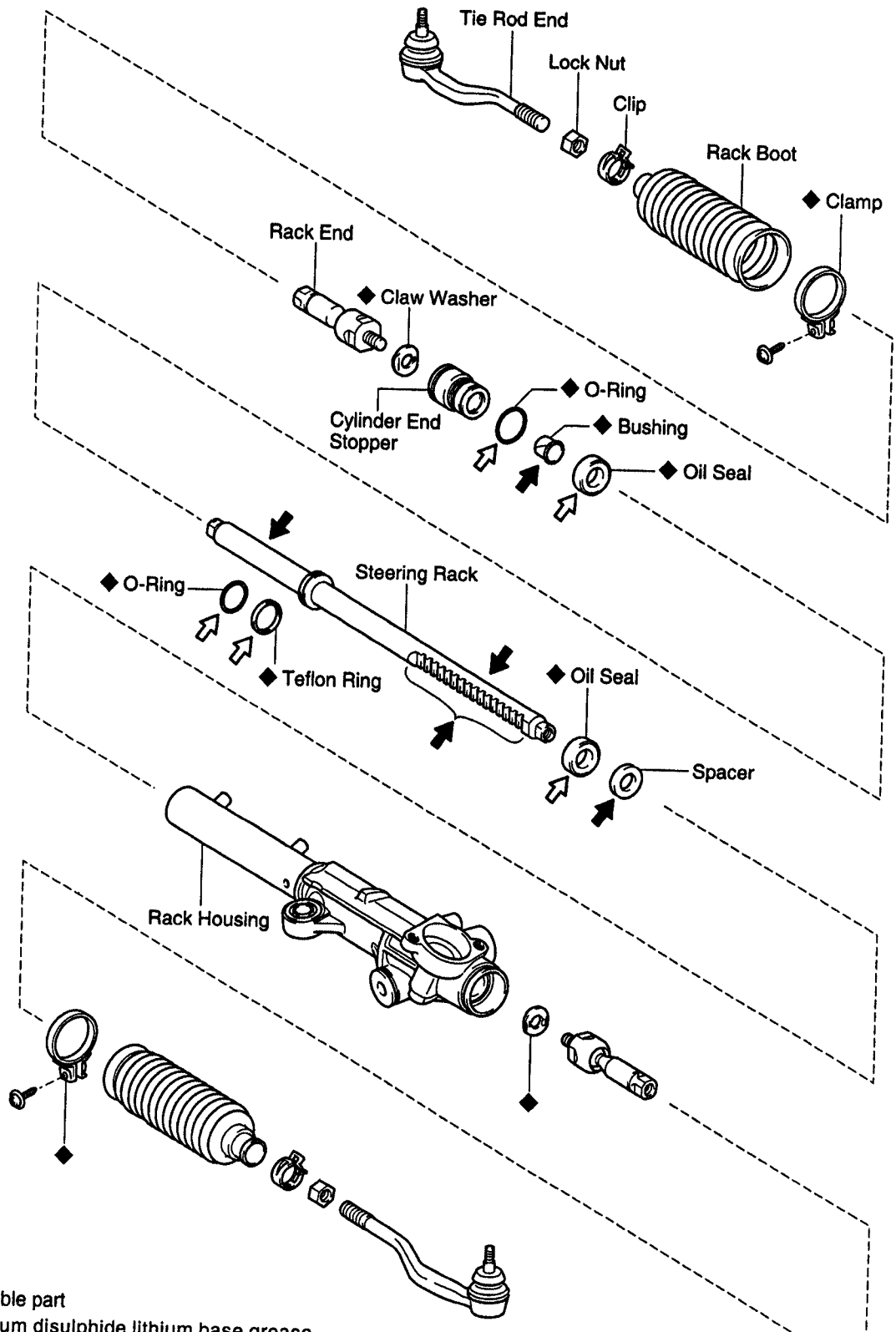

SR

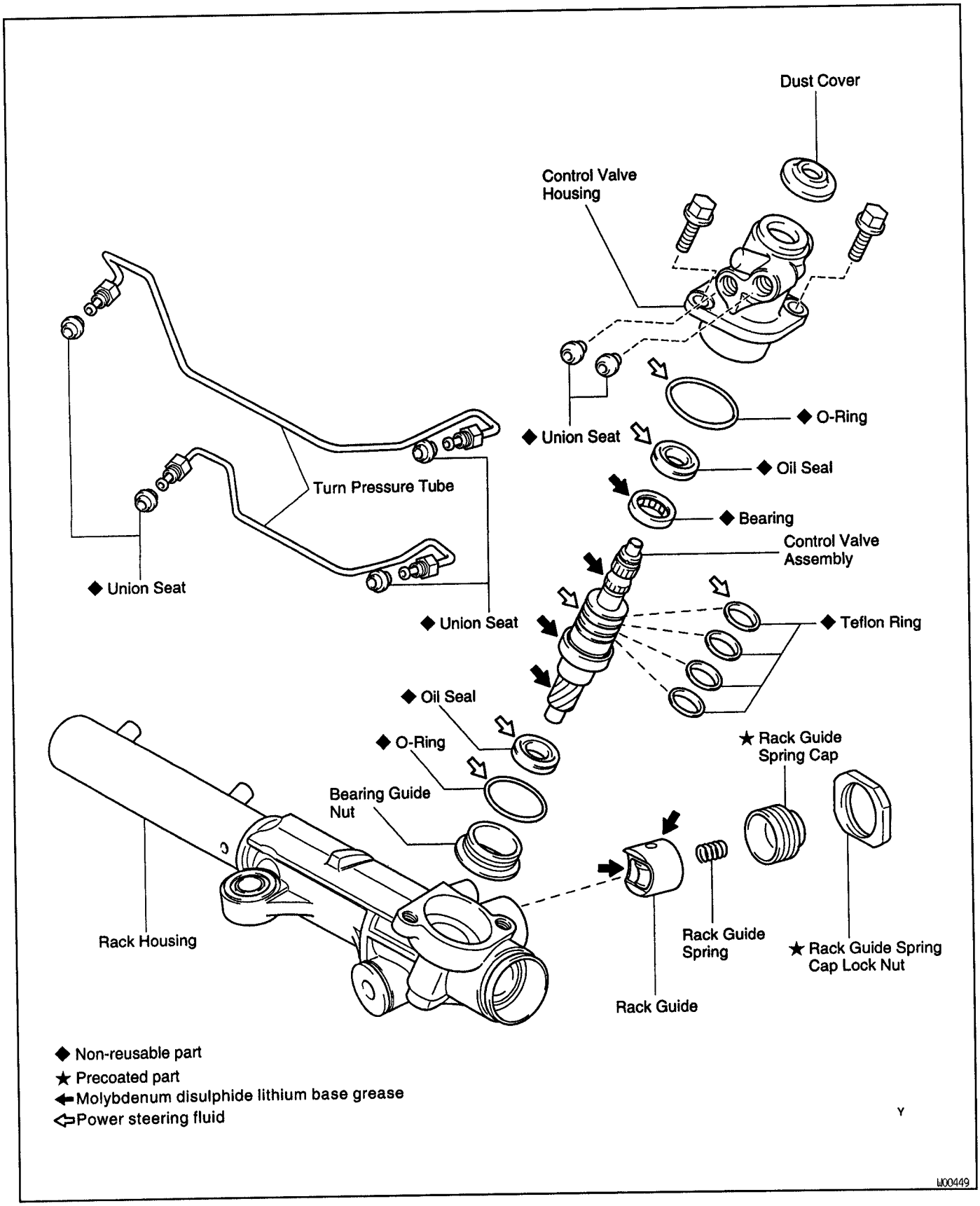
Dust Cover
Control Valve Housing
◆ O-Ring
◆ Union Seat
◆ Oil Seal
◆ Bearing
Control Valve Assembly
Turn Pressure Tube
◆ Union Seat
◆ Union Seat
◆ Teflon Ring
◆ Oil Seal
◆ O-Ring
★ Rack Guide Spring Cap
Bearing Guide Nut
Rack Housing
Rack Guide Spring
★ Rack Guide Spring Cap Lock Nut
Rack Guide
◆ Non-reusable part
★ Precoated part
Molybdenum disulphide lithium base grease
Power steering fluid
Y
W00449

SR

POWER STEERING GEAR REMOVAL

SR1D6-02

1. PLACE FRONT WHEELS FACING STRAIGHT AHEAD
2. REMOVE STEERING WHEEL PAD
   (See page SR–16)
3. REMOVW STEERING WHEEL
   (See page SR–16)
4. REMOVE ENGINE UNDER COVER
   Remove the 4 bolts.
5. DISCONNECT RH AND LH TIE ROD ENDS
   (See page SA–85)
6. DISCONNECT INTERMEDIATE NO. 2 SHAFT
   (See page SR–18)

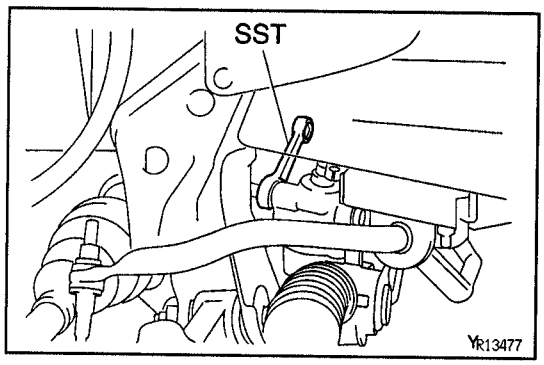

7. DISCONNECT PRESSURE FEED AND RETURN TUBES
   Using SST, disconnect the tube.
   SST 09631–22020
8. REMOVE PS GEAR ASSEMBLY
(a) Remove the bolt and nut from the bracket.
(b) Remove the 2 set bolts and nut.
9. REMOVE BRACKET AND GROMMET

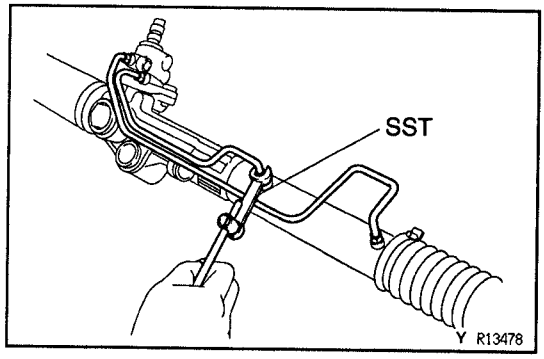

POWER STEERING GEAR DISASSEMBLY

SR1D7-02

SR

NOTICE: When using a vise, do not overtighten it.

1. REMOVE 2 TURN PRESSURE TUBES
(a) Using SST, remove the tube.
   SST 09633–00020
(b) Remove the union seat from the rack housing.
(c) Remove the union seat from the control valve housing.

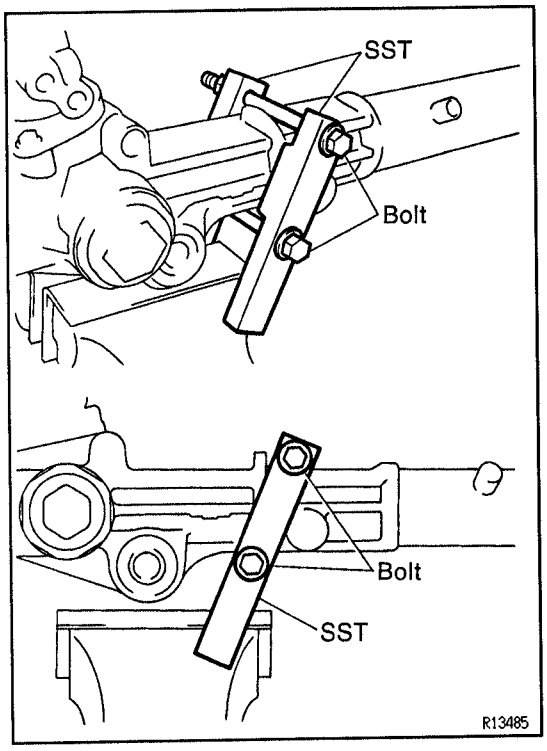

2. SECURE PS GEAR ASSEMBLY IN VISE

Using SST and 2 bolts, secure the gear assembly in a vise, as shown in the illustration.

SST 09612–00012

Reference:

Bolt: 90105–10346

Nut: 90170–10198

HINT: Use 2 of the same type of SST.

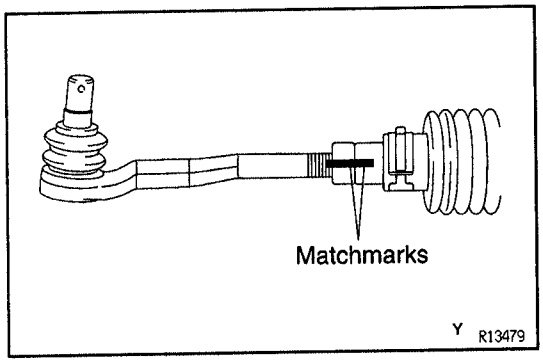

3. REMOVE RH AND LH TIE ROD ENDS AND LOCK NUTS

Place matchmarks on the tie rod end and rack end.

4. REMOVE RH AND LH CLIPS, RACK BOOTS AND CLAMPS

NOTICE:

- **Be careful not to damage the boot.**
- **Mark the RH and LH boots.**

SR

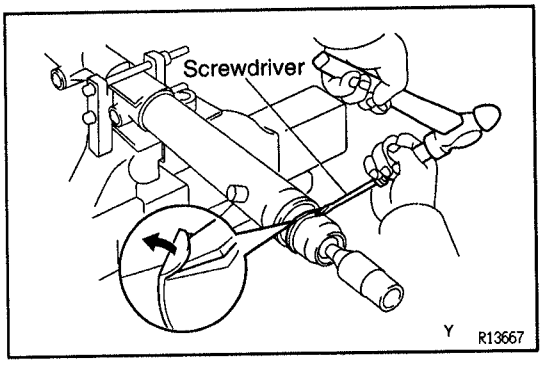

5. REMOVE RH AND LH RACK ENDS AND CLAW WASHERS

(a) Using a screwdriver and hammer, unstake the washer.

NOTICE: Avoid any impact to the steering rack.

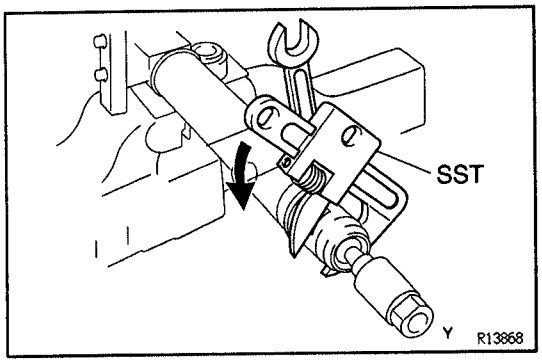

(b) Using a spanner to hold the steering rack steady, and using SST, remove the rack end.

SST 09922–10010

NOTICE:

- **Use SST 09922–10010 in the direction shown in the illustration.**
- **Mark the RH and LH rack ends.**

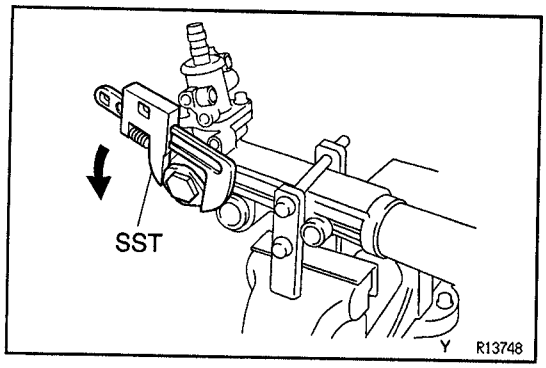

6. **REMOVE RACK GUIDE SPRING CAP LOCK NUT**
Using SST, remove the nut.
SST 09922–10010
NOTICE: Use SST 09922–10010 in the direction shown in the illustration.
7. **REMOVE RACK GUIDE SPRING CAP**
8. **REMOVE RACK GUIDE SPRING AND RACK GUIDE**
9. **REMOVE DUST COVER**
10. **REMOVE CONTROL VALVE HOUSING WITH CONTROL VALVE ASSEMBLY**
(See page SR–65)
11. **REMOVE CONTROL VALVE ASSEMBLY**
(See page SR–66)
12. **REMOVE CYLINDER END STOPPER**
(a) Using SST, remove the stopper.
SST 09922–10010
NOTICE: Use SST 09922–10010 in the direction shown in the illustration.
(b) Remove the O–ring from the stopper.

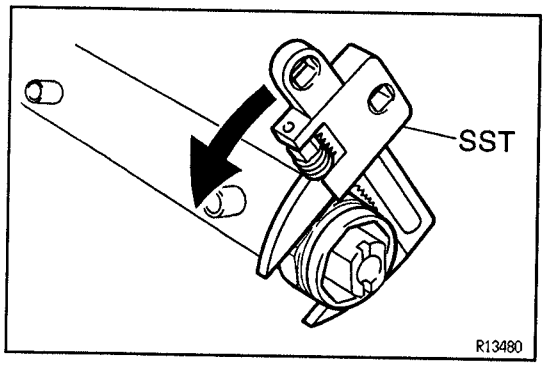

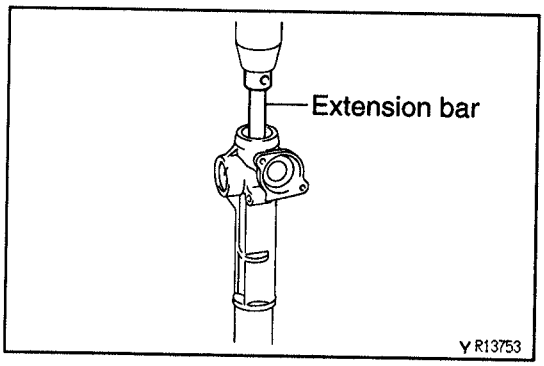

13. **REMOVE STEERING RACK AND OIL SEAL**
(a) Using an extention bar and socket wrench, press out the rack and oil seal.
NOTICE: Take care not to drop the rack.
(b) Remove the oil seal from the rack.

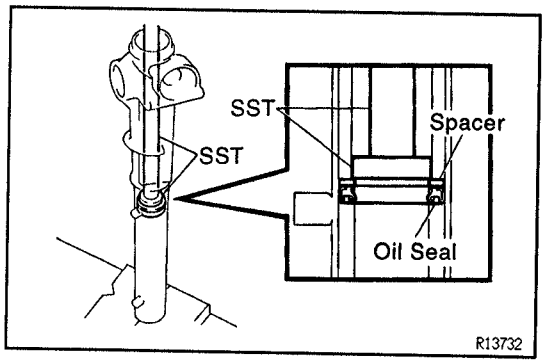

14. **REMOVE OIL SEAL AND SPACER**
Using SST, press out the oil seal and spacer.
SST 09950–60010 (09951–00360),
09950–70010 (09951–07360)

SR

POWER STEERING GEAR INSPECTION AND REPLACEMENT

SR1D8–01

(See page SR–67)

SR1D9-02

POWER STEERING GEAR ASSEMBLY

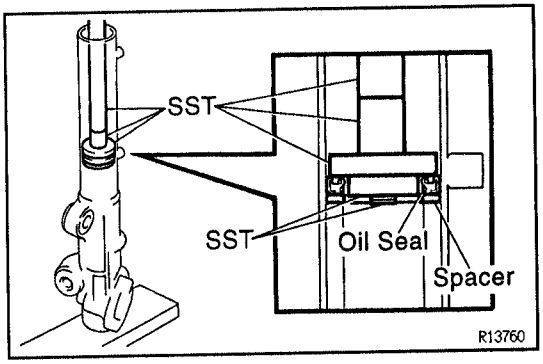

NOTICE: When using a vise, do not overtighten it.

1. **COAT WITH POWER STEERING FLUID OR MOLYBDENUM DISULPHIDE LITHIUM BASE GREASE (See pages SR–77 and 78)**
2. **INSTALL SPACER AND OIL SEAL**

(a) Coat a new oil seal lip with power steering fluid.

(b) Using SST, press in the oil seal and spacer.
SST 09951–60010 (09951–00330, 09951–00490, 09952–06010),
09951–70010 (09951–07360)

NOTICE:
- **Make sure you install the oil seal facing the correct direction.**
- **Take care that the oil seal does not get reversed as you install it.**

3. **INSTALL STEERING RACK**

(a) Install SST to the rack.
SST 09631–00350
HINT: If necessary, scrape the burrs off the rack teeth end and burnish.

(b) Coat SST with power steering fluid.

(c) Install the rack into the rack housing.

(d) Remove the SST.

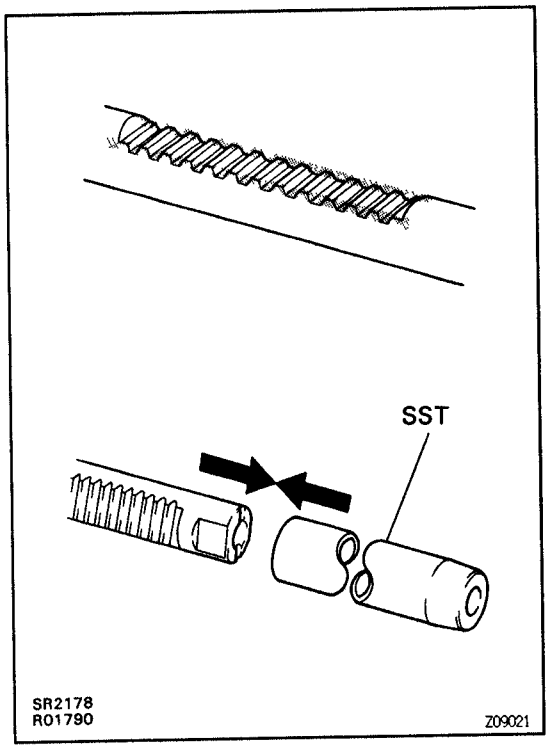

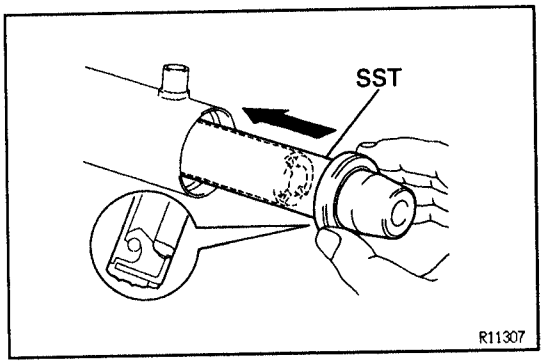

4. **INSTALL OIL SEAL**

(a) Install SST to the steering rack opposite end.
SST 09631–00350

(b) Coat SST with power steering fluid.

(c) Coat a new oil seal lip with power steering fluid.

(d) Install the oil seal by pushing it onto the SST without tilting.
NOTICE: Make sure you install the oil seal facing the correct direction.

(e) Remove the SST.

SR

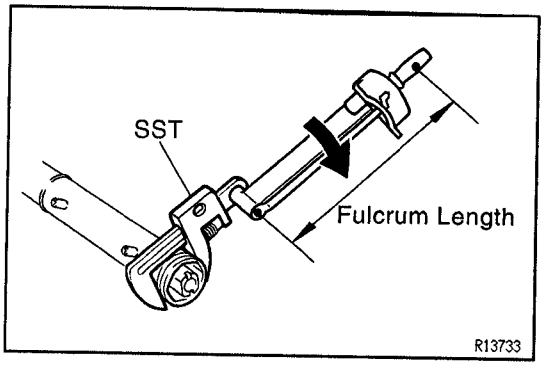

5. INSTALL CYLINDER END STOPPER

(a) Coat a new O–ring with power steering fluid, and install it to the stopper.

(b) Using SST, torque the stopper.
SST 09922–10010
Torque: 59 N·m (597 kgf·cm, 43 ft·lbf)
NOTICE: Use SST 09922–10010 in the direction shown in the illustration.
HINT: Use a torque wrench with a fulcrum length of 345 mm (13.58 in.).

(c) Using a punch and hammer, stake the rack housing.

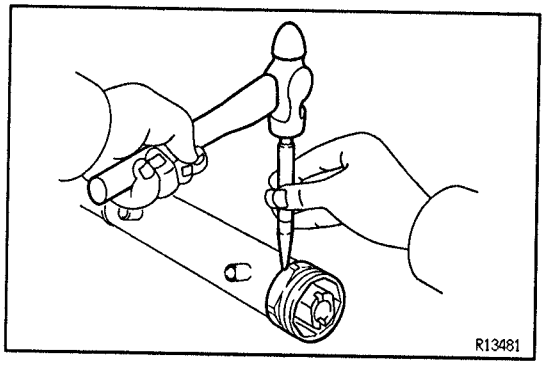

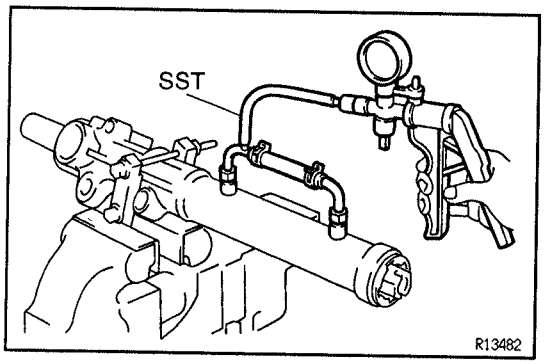

6. AIR TIGHTNESS TEST

(a) Install SST to the unions of the rack housing.
SST 09631–12071

(b) Apply 53 kPa (400 mmHg, 15.75 in.Hg) of vacuum for about 30 seconds.

(c) Check that there is no change in the vacuum.
If there is change in the vacuum, check the installation of the oil seals.

7. INSTALL CONTROL VALVE ASSEMBLY
(See page SR–71)

8. INSTALL CONTROL VALVE HOUSING WITH CONTROL VALVE ASSEMBLY
(See page SR–72)

9. INSTALL DUST COVER

10. INSTALL RACK GUIDE, RACK GUIDE SPRING AND RACK GUIDE SPRING CAP

(a) Apply sealant to 2 or 3 threads of the cap.
Sealant:
Part No. 08833–00080, THREE BOND 1344, LOCTITE 242 or equivalent

(b) Temporarily install the cap.

11. ADJUST TOTAL PRELOAD

(a) Torque the rack guide spring cap.
Torque: 25 N·m (250 kgf·cm, 18 ft·lbf)

(b) Return the cap 19°.

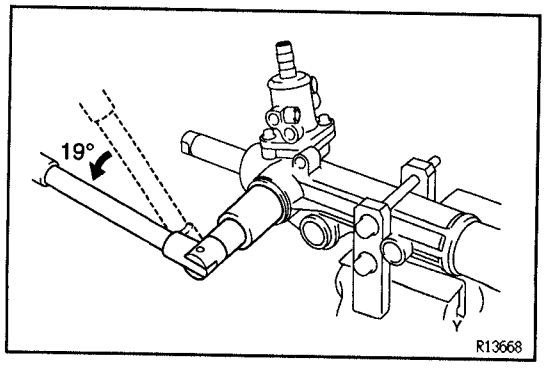

SR

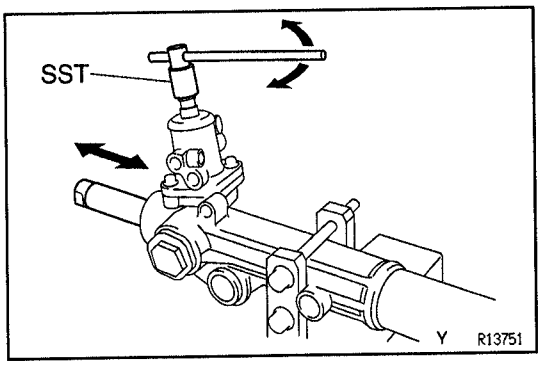

(c) Using SST, turn the control valve shaft right and left 1 or 2 times.
SST 09616–00010

(d) Loosen the cap until the rack guide spring is not functioning.

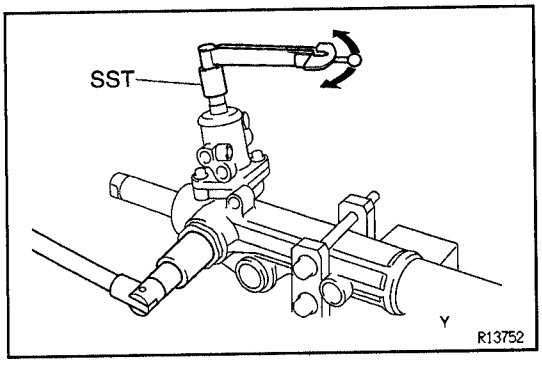

(e) Using SST and a torque wrench, tighten the cap until the preload is within specification.
SST 09616–00010
Preload (turning):
0.5–1.6 N·m (5–16.5 kgf·cm, 4.3–14.3 in.·lbf)

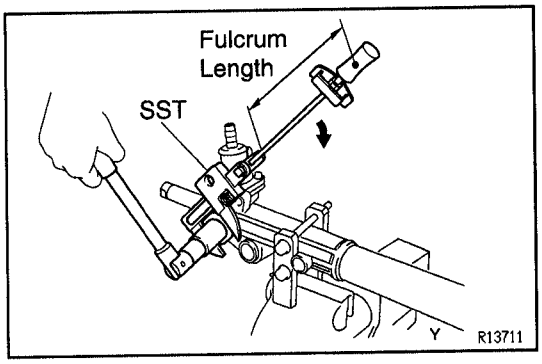

12. INSTALL RACK GUIDE SPRING CAP LOCK NUT

(a) Apply sealant to 2 or 3 threads of the nut.
Sealant:
Part No.08833–00080, THREE BOND 1344, LOCTITE 242 or equivalent

(b) Holding the rack guide spring cap rotating, and using SST, torque the nut.
SST 09922–10010
Torque: 51 N·m (521 kgf·cm, 38 ft·lbf)
NOTICE: Use SST 09922–10010 in the direction shown in the illustration.
HINT: Use a torque wrench with a fulcrum length of 345 mm (13.58 in.).

(c) Recheck the total preload.
Preload (turning):
0.5–1.7 N·m (4.7–17.2 kgf·cm, 4.1–14.9 in.·lbf)

SR

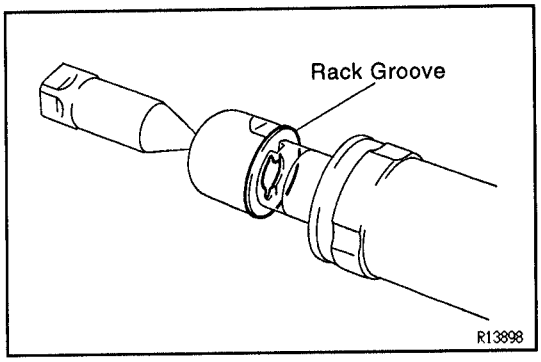

13. INSTALL RH AND LH CLAW WASHERS AND RACK ENDS

(a) Install a new washer, and temporarily tighten the rack end.
HINT: Align the claws of the washer with the steering rack grooves.

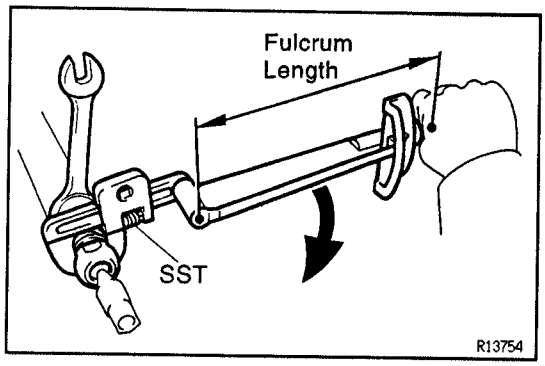

(b) Using a spanner to hold the steering rack steady, and using SST, torque the rack end.
SST 09922–10010
Torque: 76 N·m (770 kgf·cm, 56 ft·lbf)
NOTICE: Use SST 09922–10010 in the direction shown in the illustration.
HINT: Use a torque wrench with a fulcrum length of 345 mm (13.58 in.).

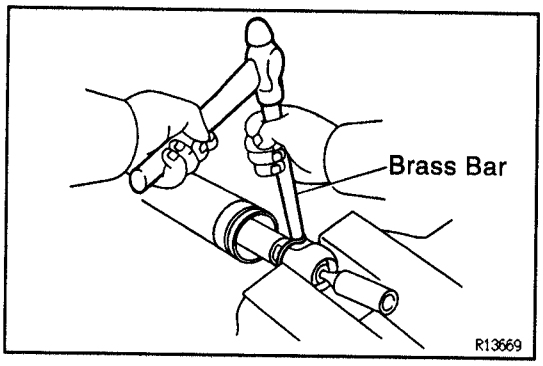

(c) Using a brass bar and hammer, stake the washer.
NOTICE: Avoid any impact to the rack.

14. INSTALL RH AND LH RACK BOOTS, CLAMPS AND CLIPS
(See page SR–74)

15. INSTALL RH AND LH TIE ROD ENDS AND LOCK NUTS
(See page SR–74)

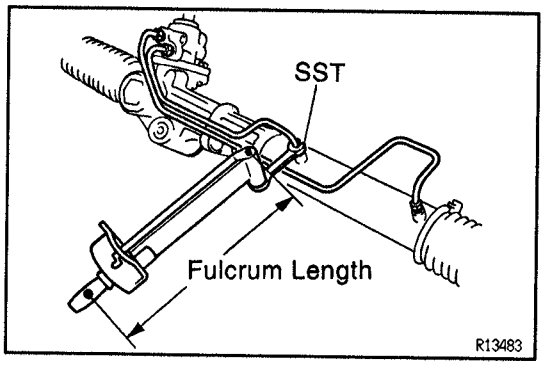

16. INSTALL 2 TURN PRESSURE TUBES
(a) Install a new union seat to the rack housing.
(b) Install a new union seat to the control valve housing.
(c) Using SST, install the tube.
SST 09633–00020
Torque: 20 N·m (203 kgf·cm, 15 ft·lbf)
HINT: Use a torque wrench with a fulcrum length of 300 mm (11.81 in.).

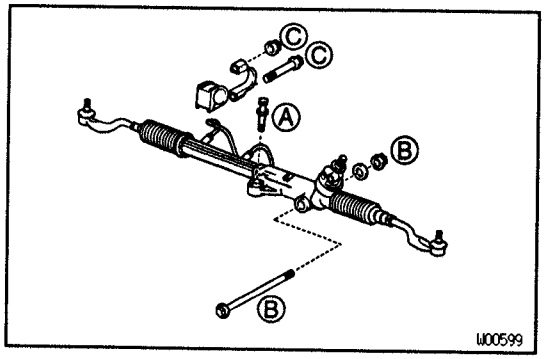

POWER STEERING GEAR INSTALLATION 0R1DA-02

SR

1. INSTALL GROMMET AND BRACKET

2. INSTALL PS GEAR ASSEMBLY
(a) Torque the gear assembly set bolt.
Bolt Ⓐ Torque: 167 N·m (1,700 kgf·cm, 123 ft·lbf)
(b) Torque the gear assembly set bolt and nut.
Bolt Ⓑ Torque: 191 N·m (1,950 kgf·cm, 141 ft·lbf)
(c) Torque the bolt and nut to the bracket.
Bolt Ⓒ Torque: 167 N·m (1,700 kgf·cm, 123 ft·lbf)

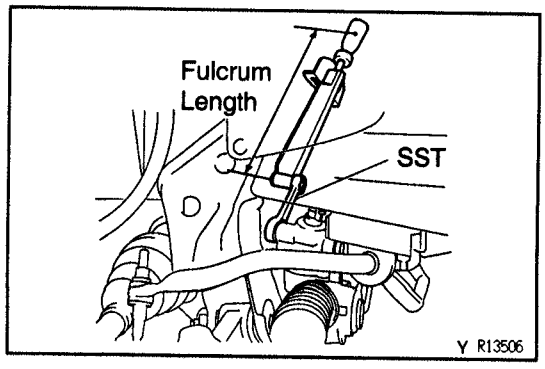

3. CONNECT PRESSURE FEED AND RETURN TUBES
Using SST, connect the tube.
SST 09631–22020
Torque:
Pressure feed tube: 36 N·m (365 kgf·cm, 26 ft·lbf)
Return tube: 40 N·m (405 kgf·cm, 29 ft·lbf)
HINT: Use a torque wrench with a fulcrum length of 300 mm (11.81 in.).

4. **CONNECT INTERMEDIATE NO. 2 SHAFT**
   (See page SR–23)
5. **CONNECT RH AND LH TIE ROD ENDS**
   (See page SA–85)
6. **POSITION FRONT WHEEL FACING STRAIGHT AHEAD**
   HINT: Do it with the front of the vehicle jacked up.
7. **CENTER SPIRAL CABLE**
   (See page SR–23)
8. **INSTALL STEERING WHEEL**

(a) Align the matchmarks on the wheel and steering column main shaft.
(b) Temporarily tighten the wheel set nut.
(c) Connect the connector.

9. **BLEED POWER STEERING SYSTEM**
   (See page SR–9)
10. **CHECK STEERING WHEEL CENTER POINT**
11. **TORQUE STEERING WHEEL SET NUT**
    Torque: 35 N·m (357 kgf·cm, 26 ft·lbf)
12. **INSTALL STEERING WHEEL PAD**
    (See page SR–24)
13. **CHECK FRONT WHEEL ALIGNMENT**
    (See page SA–8)
14. **INSTALL ENGINE UNDER COVER**
    Tighten the 4 bolts.

SERVICE SPECIFICATIONS

SERVICE DATA

SR0VC-05

ON–VEHICLE INSPECTION		
Steering wheel freeplay	Maximum	30 mm (1.18 in.)
2RZ–FE, 3RZ–FE and 5VZ–FE:		
Drive belt tension	New belt	135–180 lbf
Drive belt tension	Used belt	85–120 lbf
Oil level rise	Maximum	Below 5 mm (0.20 in.)
2WD and 4WD:		
Oil pressure at idle speed with valve closed	Minimum	8,336 kPa (85 kgf/cm², 1,209 psi)
Steering effort at idle speed	Maximum	4.9 N·m (50 kgf·cm, 43 in.·lbf)
TILT STEERING COLUMN		
Pawl stopper mark		
	11 or A	12.65–12.75 mm (0.4980–0.5020 in.)
	12 or B	12.55–12.65 mm (0.4941–0.4980 in.)
	13 or C	12.45–12.55 mm (0.4902–0.4941 in.)
	14 or D	12.35–12.45 mm (0.4862–0.4902 in.)
	15 or E	12.25–12.35 mm (0.4823–0.4862 in.)
PS VANE PUMP		
2RZ–FE and 3RZ–FE:		
Pump shaft and front housing bushing oil clearance	STD	0.03–0.05 mm (0.0012–0.0020 in.)
Pump shaft and front housing bushing oil clearance	Maximum	0.07 mm (0.0028 in.)
Vane plate height	Minimum	8.6 mm (0.339 in.)
Vane plate thickness	Minimum	1.397 mm (0.05500 in.)
Vane plate length	Minimum	14.991 mm (0.59020 in.)
Vane plate and pump rotor groove clearance	Maximum	0.033 mm (0.00130 in.)
Vane plate length	Pump rotor and cam ring mark	
	None	14.999–15.001 mm (0.59051–0.59059 in.)
	1	14.997–14.999 mm (0.59043–0.59051 in.)
	2	14.995–14.997 mm (0.59035–0.59043 in.)
	3	14.993–14.995 mm (0.59027–0.59035 in.)
	4	14.991–14.993 mm (0.59020–0.59027 in.)
Flow control valve spring length	Minimum	33.2 mm (1.307 in.)
Pump rotating torque	Maximum	0.25 N·m (2.5 kgf·cm, 2.2 in.·lbf) or less
5VZ–FE:		
Pump shaft and front housing bushing oil clearance	STD	0.03–0.05 mm (0.0012–0.0020 in.)
Pump shaft and front housing bushing oil clearance	Maximum	0.07 mm (0.0028 in.)
Vane plate height	Minimum	8.6 mm (0.339 in.)
Vane plate thickness	Minimum	1.397 mm (0.05500 in.)
Vane plate length	Minimum	14.991 mm (0.59020 in.)
Vane plate and pump rotor groove clearance	Maximum	0.033 mm (0.00130 in.)
Vane plate length	Pump rotor and cam ring mark	
	None	14.999–15.001 mm (0.59051–0.59059 in.)
	1	14.997–14.999 mm (0.59043–0.59051 in.)
	2	14.995–14.997 mm (0.59035–0.59043 in.)
	3	14.993–14.995 mm (0.59027–0.59035 in.)
	4	14.991–14.993 mm (0.59020–0.59027 in.)

Flow control valve spring length	Minimum	33.2 mm (1.307 in.)
Pump rotating torque	Maximum	0.27 N·m (2.8 kgf·cm, 2.4 in.·lbf) or less
MANUAL STEERING GEAR		
Steering rack runout	Maximum	0.3 mm (0.0118 in.)
Total preload	Turning	1.3 N·m (13 kgf·cm, 11.3 in.·lbf) or less
PS GEAR		
2WD:		
Steering rack runout	Maximum	0.3 mm (0.0118 in.)
Total preload	Turning	0.5 – 1.6 N·m (5 – 16.5 kgf·cm, 4.3 – 14.3 in.·lbf)
4WD:		
Steering rack runout	Maximum	0.3 mm (0.0118 in.)
Total preload	Turning	0.5 – 1.7 N·m (4.7 – 17.2 kgf·cm, 4.1 – 14.9 in.·lbf)

SR0VD-06

TORQUE SPECIFICATIONS

Part tightened		N·m	kgf·cm	ft·lbf
STEERING COLUMN				
Steering wheel set nut		35	357	26
Steering wheel pad set screw (Torx screw)		9.0	90	78 in.·lbf
Steering column assembly set nut and bolt		26	260	19
Main shaft assembly x Sliding yoke	2WD	36	367	27
Sliding yoke x Intermediate No.2 shaft	2WD	36	367	27
Control valve shaft x Intermediate No.2 shaft	2WD	36	367	27
Main shaft assembly x Universal joint No.2	4WD	35	360	26
Universal joint No.2 x Intermediate No.2 shaft	4WD	35	360	26
Control valve shaft x Intermediate No.2 shaft	4WD	35	360	26
NON–TILT STEERING COLUMN:				
Column shift lever assembly x Column tube	Column shift	8	82	71 in.·lbf
Turn signal bracket set bolt	Column shift	2	20	17 in.·lbf
Column hole cover x Body	2WD	8	82	71 in.·lbf
Column hole cover No.2 set bolt	4WD	8	82	71 in.·lbf
TILT STEERING COLUMN:				
Tilt lever assembly set bolt		2	20	17 in.·lbf
Turn signal bracket set bolt		5.7	58	51 in.·lbf
Tilt sub lever side pawl set bolt x nut		6	61	53 in.·lbf
Tilt lever retainer set nut		15	153	11
Compression spring set bolt		8	82	71 in.·lbf
TILT STEERING COLUMN (NASTECH):				
Column shift lever assembly x Column tube		9.3	95	83 in.·lbf
Turn signal bracket set bolt		3.4	35	31 in.·lbf
PS VANE PUMP				
2RZ–FE, 3RZ–FE and 5VZ–FE:				
Union bolt x Pressure feed tube		47	475	34
Pressure port union x Pump housing		83	850	61
Bracket x Pump assembly	5VZ–FE	43	440	32
Oil reservoir set bolt	Front	13	130	9
	Rear	24	240	17
Vane pump pulley set nut		43	440	32
Vane pump assembly with bracket set bolt and nut	5VZ–FE	43	440	32
Vane pump assembly set bolt	2RZ–FE, 3RZ–FE	39	400	29

Part tightened	N·m	kgf·cm	ft·lbf
Rear housing set bolt	24	240	17
MANUAL STEERING GEAR			
Pinion bearing adjusting screw	17 (25)	174 (250)	13 (18)
Pinion bearing adjusting screw lock nut	88 (113)	894 (1,150)	65 (83)
Rack guide spring cap	25	250	18
Rack guide spring cap lock nut	50 (69)	513 (700)	37 (51)
Rack housing No.2 bracket set bolt	61	620	45
Rack x Rack end	61 (83)	621 (850)	45 (62)
Tie rod end lock nut	54	550	40
Manual steering gear assembly x Body	201	2,050	148
Sliding yoke x Intermediate No.2 shaft	36	367	27
Pinion shaft x Intermediate No.2 shaft	36	367	27
PS GEAR			
2WD:			
Cylinder end stopper	59	600	43
Bearing guide nut	25	250	18
Control housing set bolt	18	185	13
Rack guide spring cap	25	250	18
Rack guide spring cap lock nut	50 (60)	513 (700)	37 (51)
Rack housing No.2 bracket set bolt	39	400	29
Rack x Rack end	75 (103)	762 (1,050)	55 (76)
Tie rod end lock nut	54	550	40
Turn pressure tube union nut	20 (25)	203 (250)	15 (18)
PS gear assembly set bolt	201	2,050	148
Pressure feed tube x Control valve housing	36 (45)	365 (450)	26 (33)
Return tube x Control valve housing	40 (49)	405 (500)	29 (36)
Sliding yoke x Intermediate No.2 shaft	36	367	27
Control valve shaft x Intermediate No.2 shaft	36	367	27
Steering wheel set nut	35	357	26
4WD:			
Cylinder end stopper	59 (78)	597 (800)	43 (58)
Rack guide spring cap lock nut	51 (60)	521 (700)	38 (51)
Rack x Rack end	76 (103)	770 (1,050)	56 (76)
Tie rod end lock nut	55	560	41
Turn pressure tube union nut	20 (25)	203 (250)	15 (18)
PS gear assembly set bolt	167	1,700	123
PS gear assembly set bolt and nut	191	1,950	141
Bracket x Body	167	1,700	123
Pressure feed tube x Control valve housing	36 (45)	365 (450)	26 (33)
Return tube x Control valve housing	40 (49)	405 (500)	29 (36)
Universal joint No.2 x Intermediate No.2 shaft	35	360	26
Control valve shaft x Intermediate No.2 shaft	35	360	26
Steering wheel set nut	35	357	26

( ): For use without SST

SR

SUPPLEMENTAL RESTRAINT SYSTEM

GENERAL DESCRIPTION ..... RS– 2
OPERATION ..... RS– 3
PREPARATION ..... RS– 7
STEERING WHEEL PAD AND SPIRAL CABLE ..... RS– 8
AIRBAG SENSOR ASSEMBLY ..... RS– 17
WIRE HARNESS AND CONNECTOR ..... RS– 20
TROUBLESHOOTING ..... RS– 22
SERVICE SPECIFICATIONS ..... RS– 51

GENERAL DESCRIPTION

RS01T-0W

The TACOMA is equipped with an SRS (Supplemental Restraint System), which comprises a driver airbag. Failure to carry out service operations in the correct sequence could cause the SRS to unexpectedly deploy during servicing, possibly leading to a serious accident. Further, if a mistake is made in servicing the SRS, it is possible the SRS may fail to operate when required. Before performing services (including removal or installation of parts, inspection or replacement), be sure to read the following items carefully, then follow the correct procedure described in the repair manual.

1. Malfunction symptoms of the SRS are difficult to confirm, so the DTCs become the most important source of information when troubleshooting. When troubleshooting the SRS, always inspect the DTCs before disconnecting the battery. (See page RS–26)
2. **Work must be started after 90 seconds from the time the ignition switch is turned to the "LOCK" position and the negative (–) terminal cable is disconnected from the battery. (The SRS is equipped with a back–up power source so that if work is started within 90 seconds of disconnecting the negative (–) terminal cable from the battery, the SRS may deploy.)**
   When the negative (–) terminal cable is disconnected from the battery, the memory of the clock and audio system will be canceled. So before starting work, make a record of the contents memorized by the audio memory system. When work is finished, reset the audio systems as before and adjust the clock. To avoid erasing the memory of each memory system, never use a back–up power supply from outside the vehicle.
3. Even in cases of a minor collision where the SRS does not deploy, the steering wheel pad and airbag sensor assembly should be inspected. (See pages RS–8 and 17)
4. Never use SRS parts from another vehicle. When replacing parts, replace them with new parts.
5. Before repairs, remove the airbag sensor if shocks are likely to be applied to the sensor during repairs.
6. Never disassemble and repair the steering wheel pad or airbag sensor assembly in order to reuse it.
7. If the steering wheel pad or airbag sensor assembly has been dropped, or if there are cracks, dents or other defects in the case, bracket or connector, replace them with new ones.
8. Do not expose the steering wheel pad or airbag sensor assembly directly to hot air or flames.
9. Use a volt/ohmmeter with high impedance (10 kΩ/V minimum) for troubleshooting the system's electrical circuits.
10. Information labels are attached to the periphery of the SRS components. Follow the instructions on the notices.
11. After work on the SRS is completed, check the SRS warning light. (See page RS–26)
12. If the vehicle is equipped with a mobile communication system, refer to the precaution in the IN section.

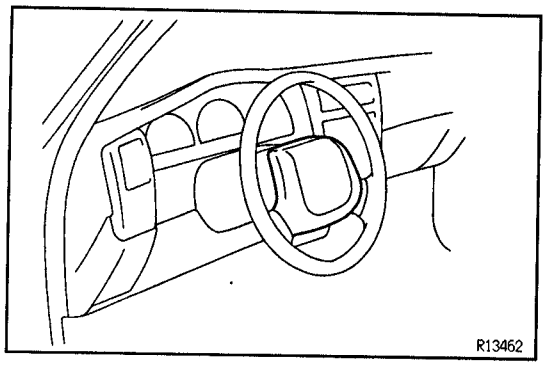
R13462

OPERATION

FUNCTION OF COMPONENTS

RS0AN–01

1. STEERING WHEEL PAD (with AIRBAG)

The inflater and bag of the SRS are stored in the steering wheel pad and cannot be disassembled. The inflater contains a squib, igniter charge, gas generantor, etc., and inflates the bag when instructed by the airbag sensor assembly.

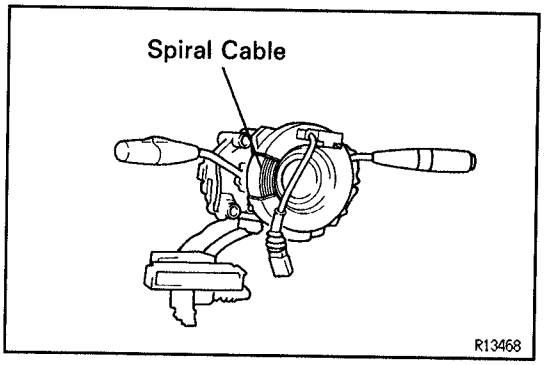

R13468

2. SPIRAL CABLE (in COMBINATION SWITCH)

A spiral cable is used as an electrical joint from the vehicle body side to the steering wheel.

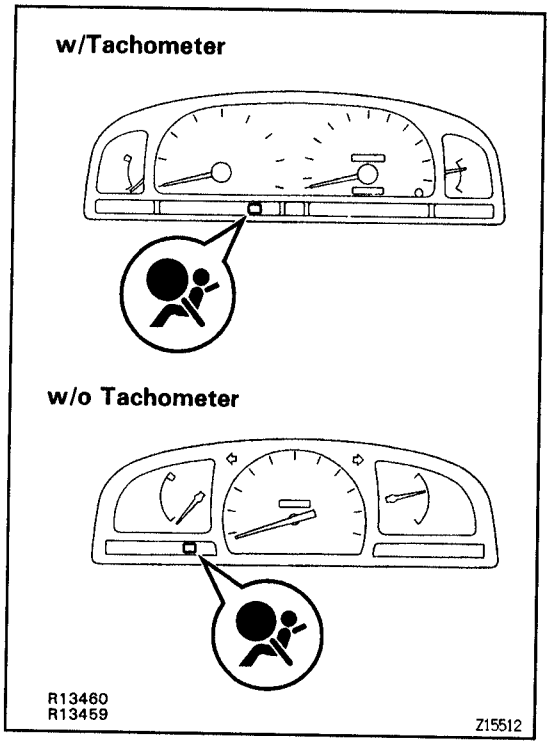

R13460
R13459
Z15512

3. SRS WARNING LIGHT

The SRS warning light is located on the combination meter. It goes on to alert the driver of trouble in the system when a malfunction is detected in the airbag sensor assembly. In normal operating condition, when the ignition switch is turned to the ACC or ON position, the light goes on for about 6 seconds and then goes off.

RS

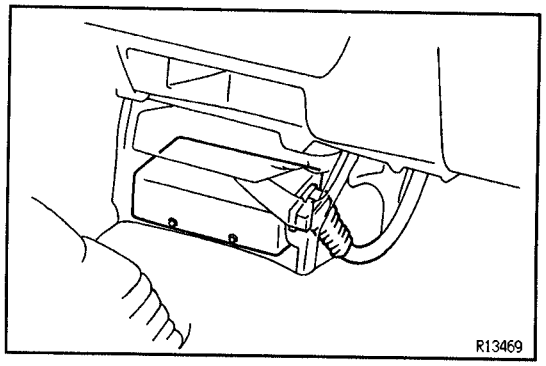
R13469

4. AIRBAG SENSOR ASSEMBLY

The airbag sensor assembly is mounted on the floor inside the airbag sensor cover. The airbag sensor assembly consists of a airbag sensor, safing sensor, diagnosis circuit and ignition control, drive circuit, etc. It receives signals from the airbag sensor and judges whether the SRS must be activated or not.

5. SRS CONNECTORS

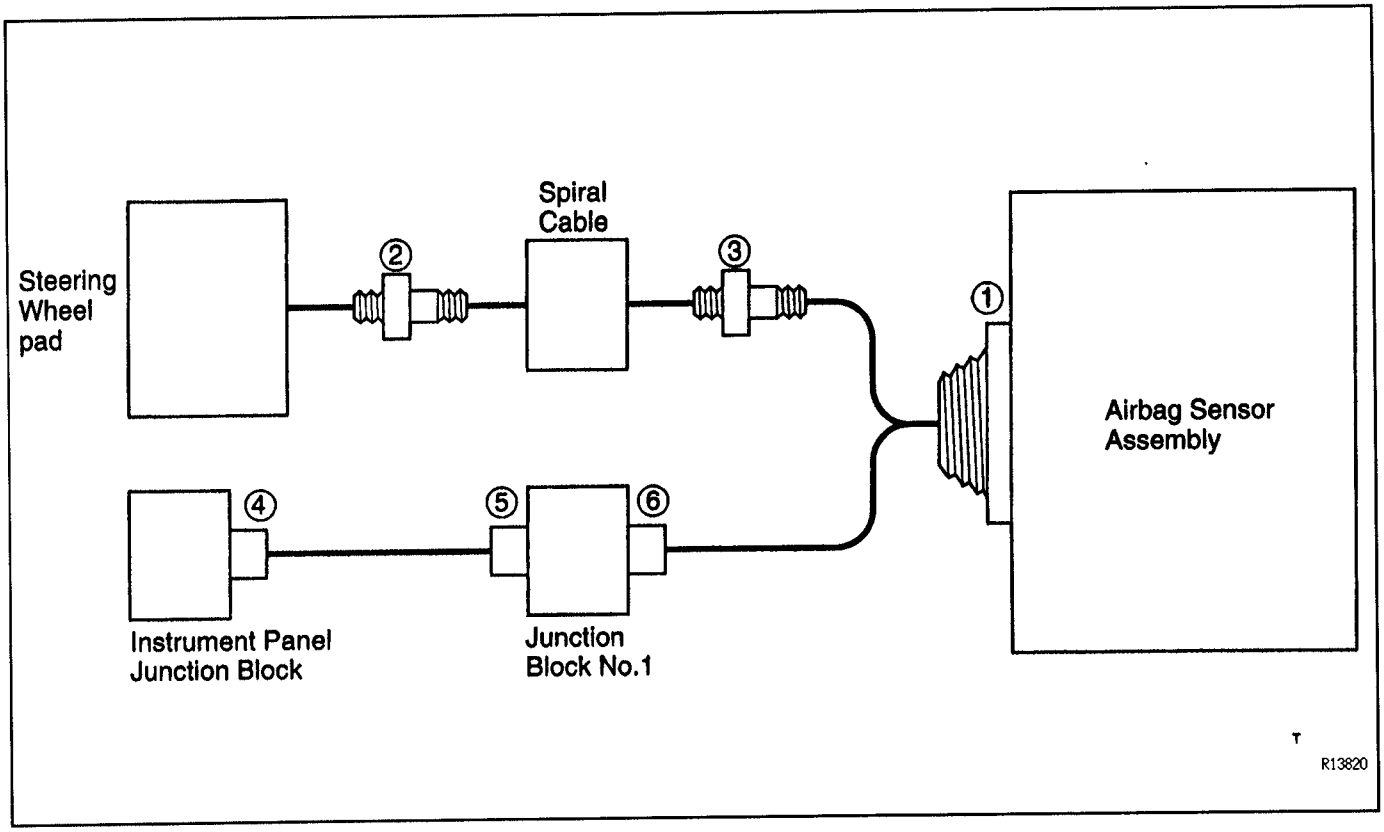

No.	Item	Application
(1)	Terminal Twin–lock Mechanism	Connectors ①, ②, ③, ④, ⑤, ⑥
(2)	Airbag Activation Prevention Mechanism	Connectors ②, ③
(3)	Electrical Connection Check Mechanism	Connectors ①
(4)	Connector Twin–lock Mechanism	Connectors ②, ③

RS

All connectors in the SRS are colored yellow to distinguish them from other connectors. Connectors having special functions and specifically designed for the SRS are used in the locations shown above to ensure high reliability. These connectors use durable gold–plated terminals.

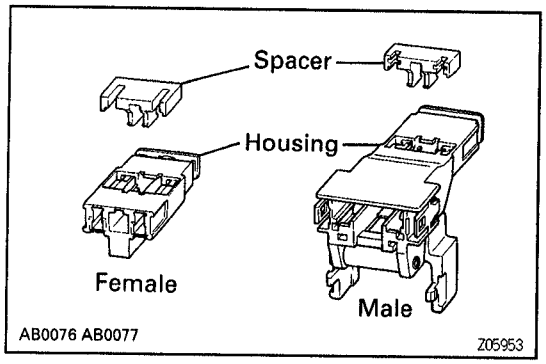

(1) Terminal Twin–Lock Mechanism
Each connector has a two–piece construction consisting of a housing and a spacer. This design secures the locking of the terminal by two locking devices (the retainer and the lance) to prevent terminals from coming out.

(2) Airbag Activation Prevention Mechanism
Each connector contains a short spring plate. When the connector is disconnected, the short spring plate automatically connects the power source and grounding terminals of the squib.

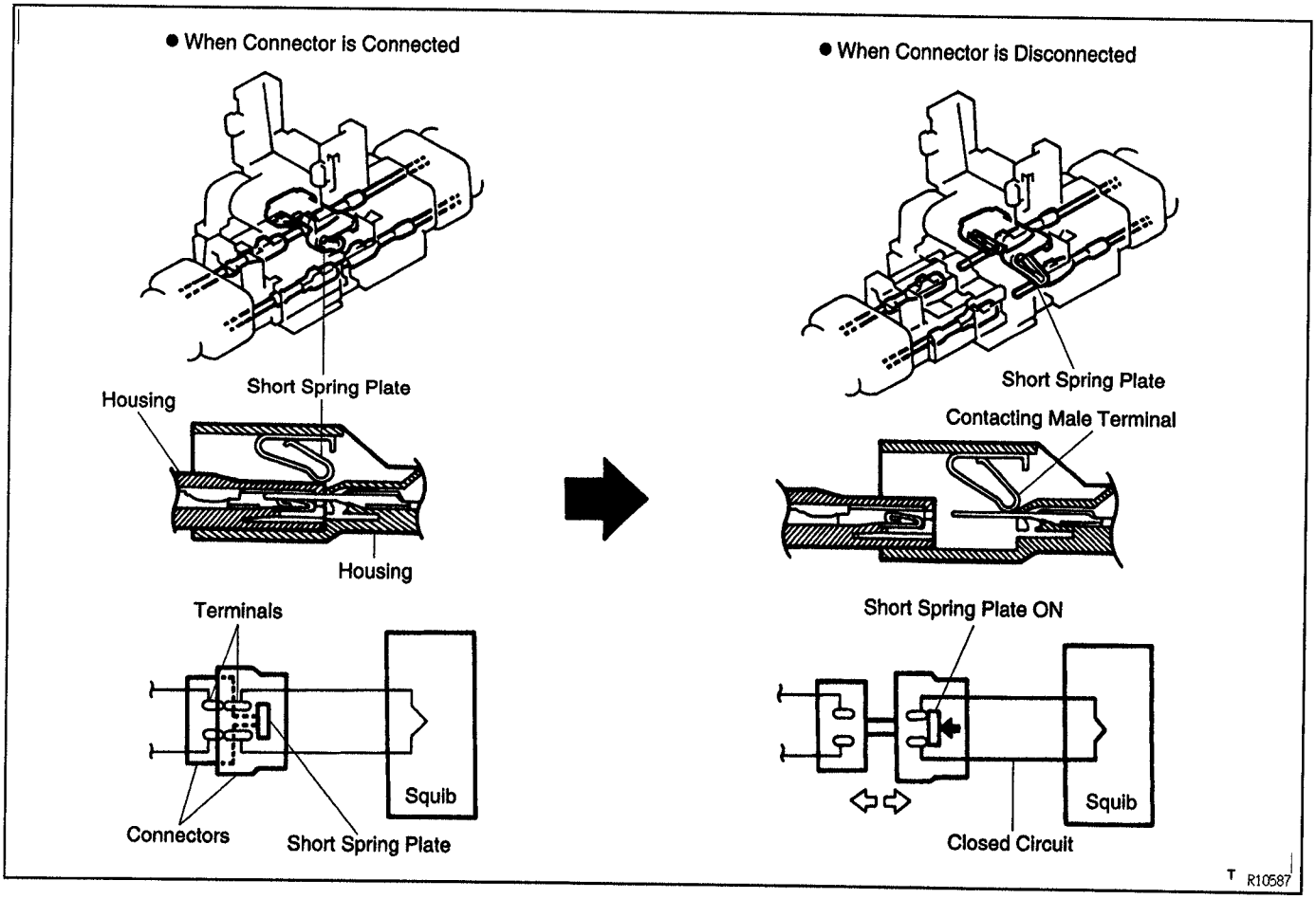

HINT: The type of connector shown above is used for connectors ② and ③, in the diagram on the preceding page.

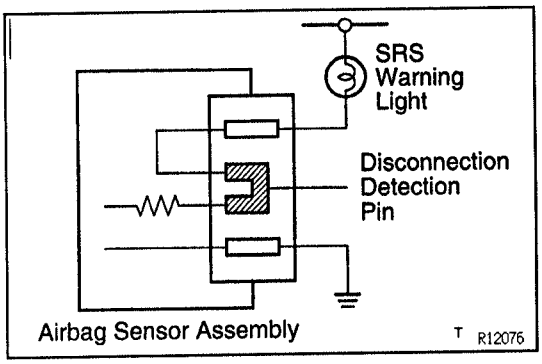

(3) Electrical Connection Check Mechanism
This mechanism electrically checks if connectors are connected correctly and completely. The electrical connection check mechanism is designed so that the disconnection detection pin connects with the diagnosis terminals when the connector housing lock is locked.

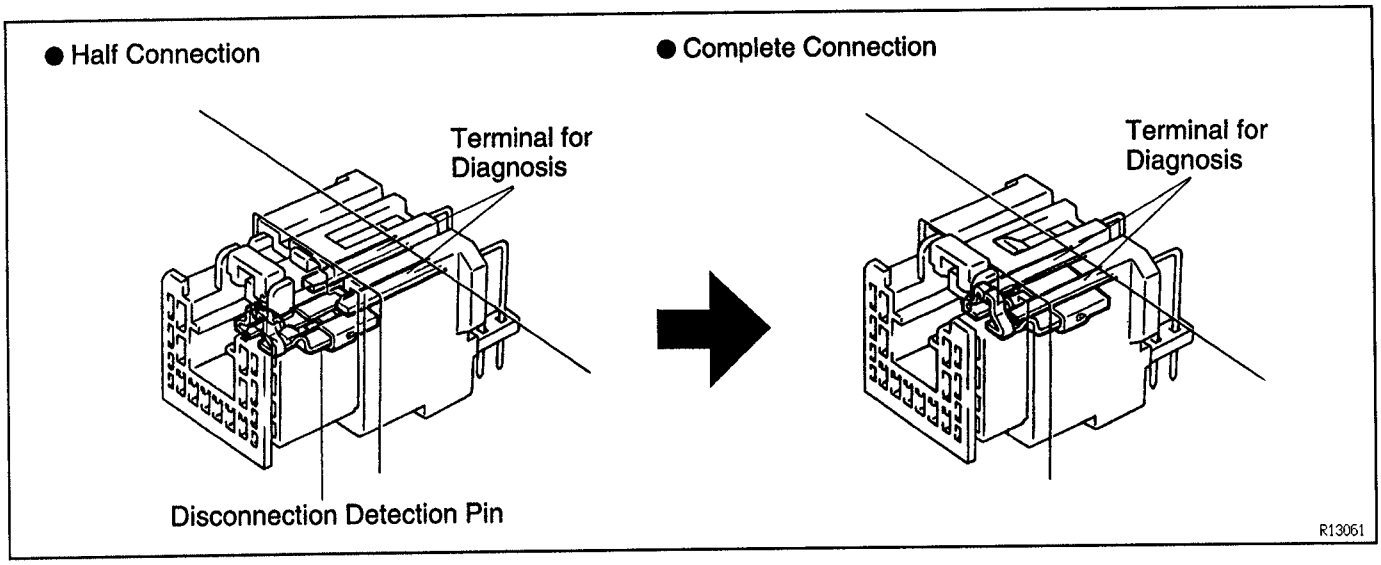

HINT: The illustration shows connector ①.

(4) Connector Twin–Lock Mechanism
With this mechanism, connectors (male and female connectors) are locked by 2 locking devices to increase connection reliability. If the primary lock is incomplete, ribs interfere and prevent the secondary lock.

RS

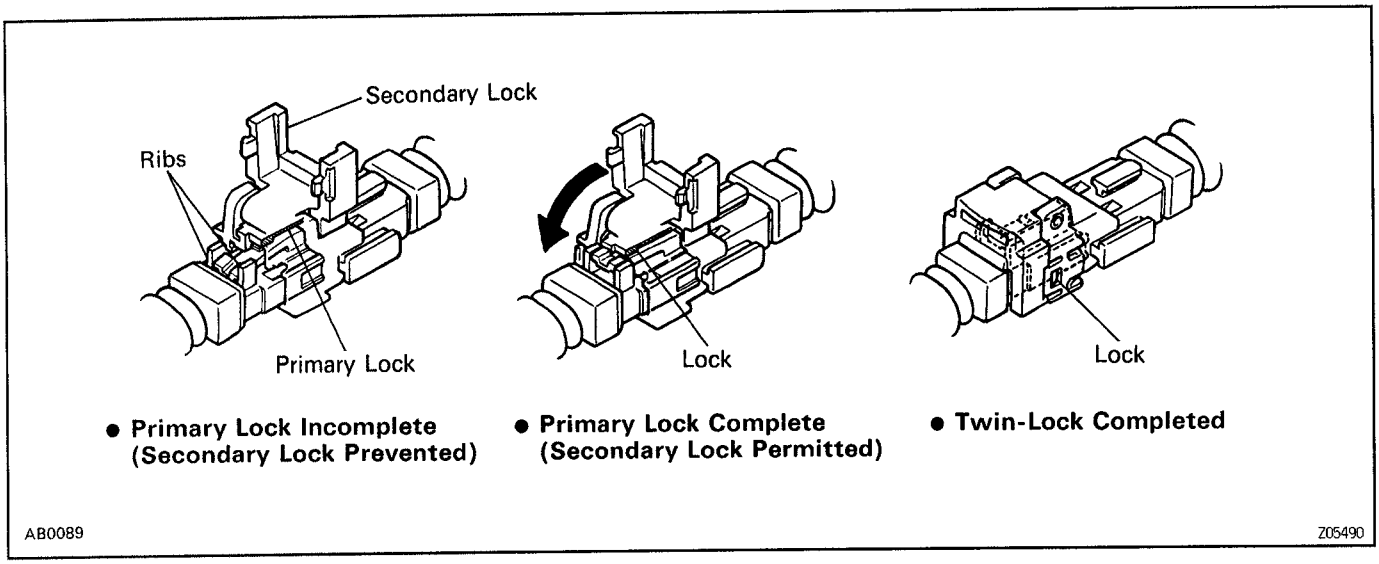

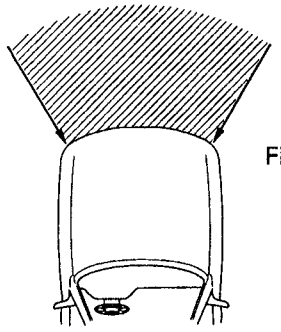

Fig. 1

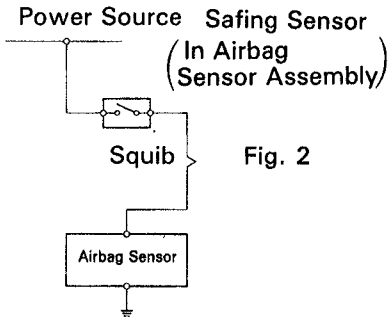

Fig. 2

R10618
R13794

Z15511

When the vehicle is involved in a frontal collision in the hatched area (Fig. 1) and the shock is larger than a predetermined level, the SRS is activated automatically. A safing sensor is designed to go on at a smaller deceleration rate than the airbag sensor. As illustrated in Fig. 2, ignition is caused when current flows to the squib, which happens when a safing sensor and the airbag sensor go on simultaneously. When a deceleration force acts on the sensor, squib in the driver airbag and ignite and generate gas. The gas discharging into the driver airbag and rapidly increases the pressure inside the bag, breaking open the steering wheel pad and instrument panel door.

Bag inflation then ends, and the bag deflates as the gas is discharged through discharge holes at the bag rear or side.

PREPARATION

SST (SPECIAL SERVICE TOOLS)

RS00X–0J

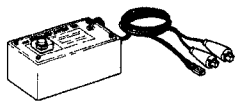	09082–00700	SRS Airbag Deployment Tool	
	09843–18020	Diagnosis Check Wire	

RECOMMENDED TOOLS

RS00Y–0P

	09042–00020	Torx Socket T40 .	Airbag sensor assembly
	09082–00050	TOYOTA Electrical Tester Set.	

RS

RS00Z–0N

EQUIPMENT

Torque wrench	
Bolt: Length: 35 mm (1.38 in.) Pitch: 1.0 mm (0.039 in.) Diam.: 6.0 mm (0.236 in.)	Airbag disposal
Tire Width: 185 mm (7.28 in.) Inner diam.: 360 mm (14.17 in.)	Airbag disposal
Tire with disc wheel Width: 185 mm (7.28 in.) Inner diam.: 360 mm (14.17 in.)	Airbag disposal
Vinyl bag	Airbag disposal

STEERING WHEEL PAD AND SPIRAL CABLE

RS01Z–0G

INSPECTION ITEMS

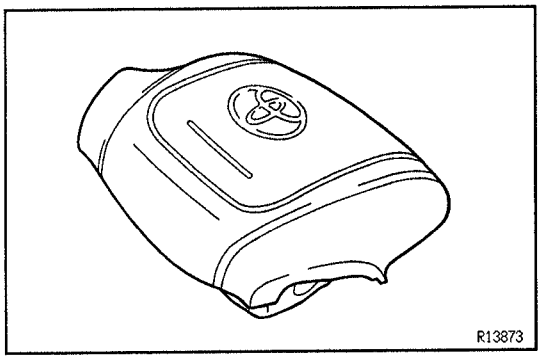

1. VEHICLES NOT INVOLVED IN A COLLISION

(a) Do a diagnostic system check. (See page RS–26)

(b) Do a visual check which includes the following items with the steering wheel pad (with airbag) installed in the vehicle.

- Check for cuts, minute cracks or marked discoloration of the steering wheel pad top surface and grooved portion.

2. VEHICLES INVOLVED IN A COLLISION

IF THE AIRBAG IS NOT DEPLOYED

(a) Do a diagnostic system check. (See page RS–26)

(b) Do a visual check which includes the following items with the steering wheel pad (with airbag) removed from the vehicle.

- Check for cuts and cracks in, or marked discoloration of, the steering wheel pad top surface and its grooved portion.
- Check for cuts and cracks in wire harnesses, and for chipping in connectors.
- Check for deformation of the horn button contact plate of the steering wheel.

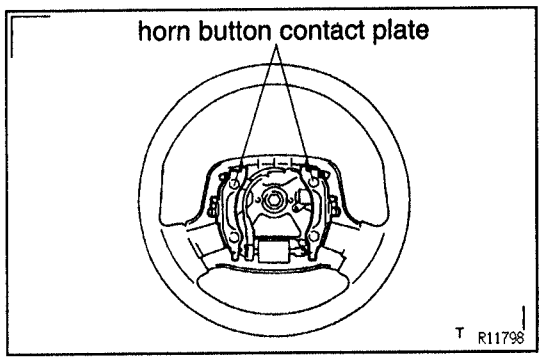

HINT:

- If the horn button contact plate of the steering wheel is deformed, never repair it. Always replace the steering wheel assembly with a new one.
- There should be no interference between the steering wheel pad and the steering wheel, and the clearance should be uniform all the way around when the new steering wheel pad is installed on the steering wheel.

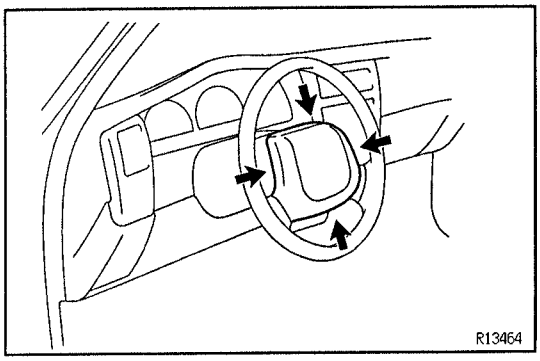

CAUTION: For removal and installation of the steering wheel pad, see the SR section and be sure to follow the correct procedure.

IF THE AIRBAG IS DEPLOYED

(a) Do a diagnostic system check. (See page RS–26)

(b) Do a visual check which includes the following items with the steering wheel pad (with airbag) removed from the vehicle.

- Check for deformation of the horn button contact plate of the steering wheel.
- Check for damage to the spiral cable connector and wire harness.

HINT:

- If the horn button contact plate of the steering wheel is deformed, never repair it. Always replace the steering wheel assembly with a new one.
- There should be no interference between the steering wheel pad and the steering wheel, and the clearance should be uniform all the way around when the new steering wheel pad is installed on the steering wheel.

REPLACEMENT REQUIREMENTS

RS011–0J

In the following cases, replace the steering wheel pad, steering wheel or spiral cable.

- If the airbag has been deployed.
- If the steering wheel pad or spiral cable has been found to be faulty in troubleshooting.
- If the steering wheel pad, steering wheel or spiral cable has been found to be faulty during the check in items 1–(b) or 2–(b).
- If the steering wheel pad has been dropped.

CAUTION: For replacement of the steering wheel pad, see the SR section and be sure to follow the correct procedure.

RS

RS07N–02

COMPONENTS

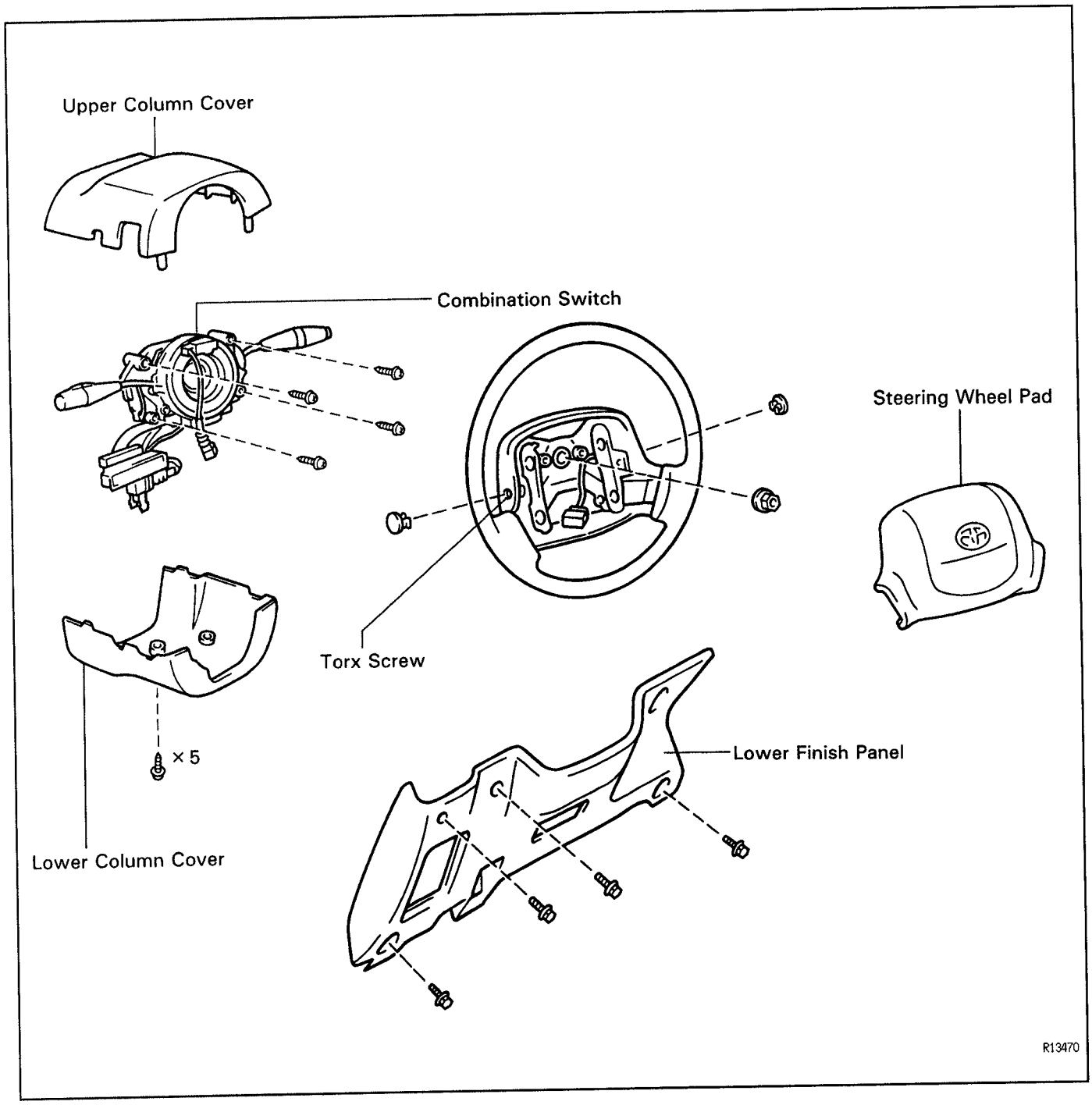

RS07P–02

STEERING WHEEL PAD AND SPIRAL CABLE REMOVAL AND INSTALLATION

(See SR section)

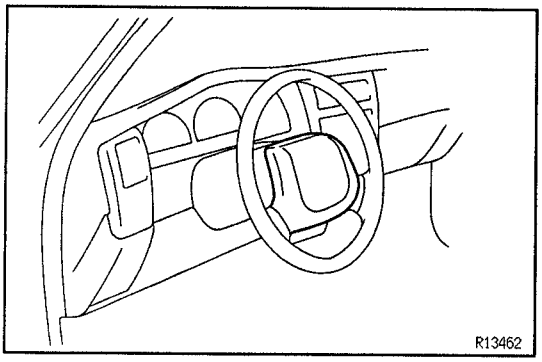

STEERING WHEEL PAD (WITH AIRBAG) DISPOSAL RS0AP-01

When scrapping vehicles equipped with an SRS or disposing of a steering wheel pad (with airbag), always first deploy the airbag in accordance with the procedure described below.

If any abnormality occurs with the airbag deployment, contact the SERVICE DEPT. of TOYOTA MOTOR SALES, U.S.A., INC..

Never dispose of a steering wheel pad which has an undeployed airbag.

When disposing of a steering wheel pad with an airbag deployed in a collision, follow the same procedure given under "When scrapping vehicle, step 4. DISPOSAL OF STEERING WHEEL PAD (WITH AIRBAG)" (See page RS–13).

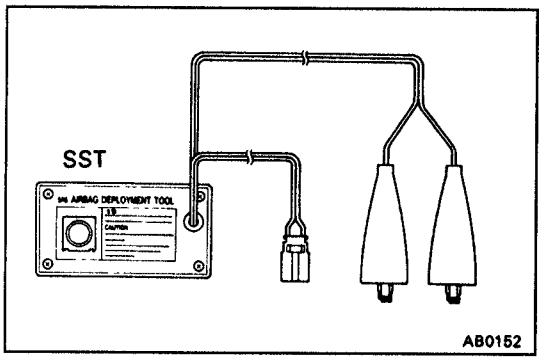

PRECAUTIONS FOR AIRBAG DEPLOYMENT

- The airbag produces a sizeable exploding sound when it deploys, so do the operation out–of–doors and where it will not create a nuisance to nearby residents.
- When deploying the airbag, always use the specified SST: SRS AIRBAG DEPLOYMENT TOOL (SST 09082–00700). Carry out the operation in a place away from electrical noise.
- When deploying an airbag, do it at least 10 m (33 ft) away from the steering wheel pad.
- The steering wheel pad is very hot when the airbag is deployed, so leave it alone for at least 30 minutes after deployment.
- Use gloves and safety glasses when handling a steering wheel pad with a deployed airbag.
- Do not apply water, etc. to a steering wheel pad with a deployed airbag.
- Always wash your hands with water after completing the operation.

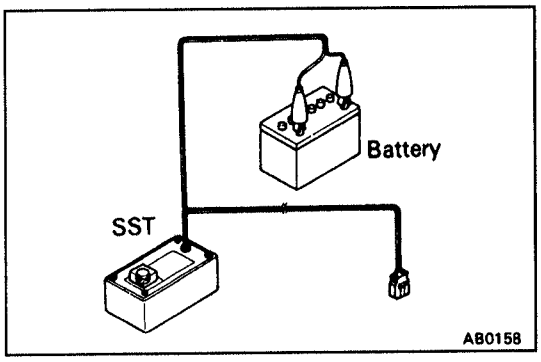

When scrapping vehicle

HINT: Have a battery ready as the power source to deploy the airbag.

1. **CONFIRM FUNCTIONING OF SST**
(See page RS–17)
SST 09082–00700

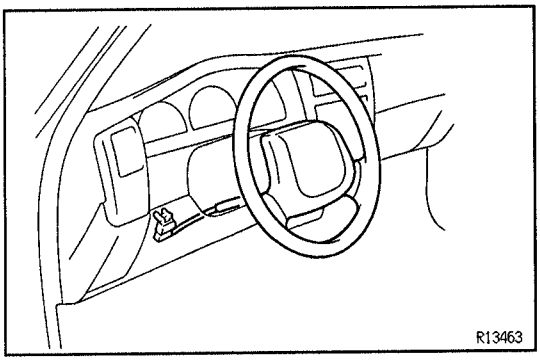

2. **INSTALL SST**
CAUTION: Check that there is no looseness in the steering wheel and steering wheel pad.
(a) Remove the under cover No.1.
(b) Disconnect the airbag connector of the spiral cable.

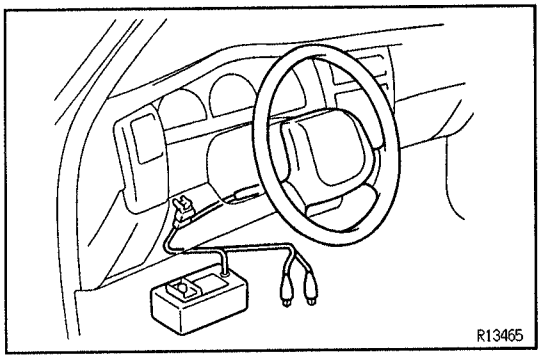

(c) Connect the SST connector to the airbag connector of the spiral cable.
SST 09082–00700

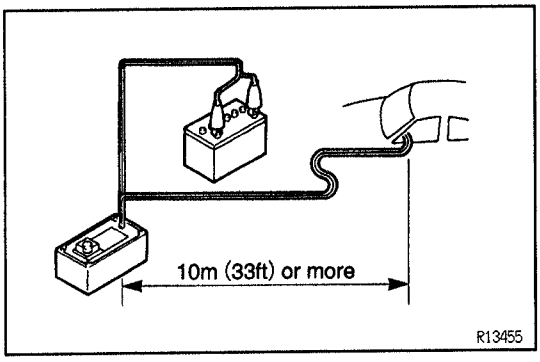

(d) Move the SST to at least 10 m (33 ft) away from the front of the vehicle.
(e) Close all the doors and windows of the vehicle.
NOTICE: Take care not to damage the SST wire harness.
(f) Connect the SST red clip to the battery positive (+) terminal and the black clip to the battery negative (–) terminal.

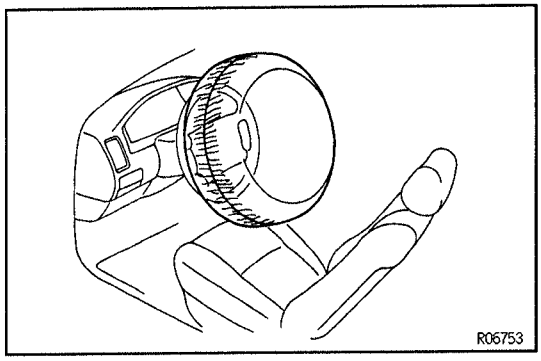

3. **DEPLOY AIRBAG**
(a) Confirm that no–one is inside the vehicle or within 10 m (33 ft) of the vehicle.
(b) Press the SST activation switch and deploy the airbag.
HINT: The airbag deploys simultaneously as the LED of the SST activation switch lights up.

4. DISPOSAL OF STEERING WHEEL PAD (WITH AIRBAG)

CAUTION:

- **The steering wheel pad is very hot when the airbag is deployed, so leave it alone for at least 30 minutes after deployment.**
- **Use gloves and safety glasses when handling a steering wheel pad with a deployed airbag.**
- **Do not apply water, etc. to a steering wheel pad with a deployed airbag.**
- **Always wash your hands with water after completing the operation.**

(a) When scrapping a vehicle, deploy the airbag and scrap the vehicle with the steering wheel pad still installed.

(b) When moving a vehicle for scrapping which has a steering wheel pad with a deployed airbag, use gloves and safety glasses.

When disposing of steering wheel pad only

When disposing of the steering wheel pad (with airbag) only, never use the customer's vehicle to deploy the airbag.

Remove the steering wheel pad from the vehicle and be sure to follow the procedure given below when deploying the airbag.

HINT: Have a battery ready as the power source to deploy the airbag.

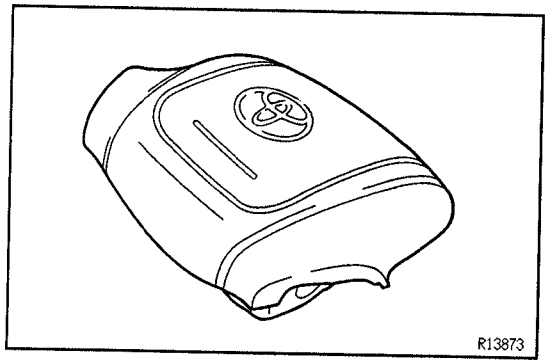

1. REMOVE STEERING WHEEL PAD (See SR section)

CAUTION: When storing the steering wheel pad, keep the upper surface of the pad facing upward.

RS

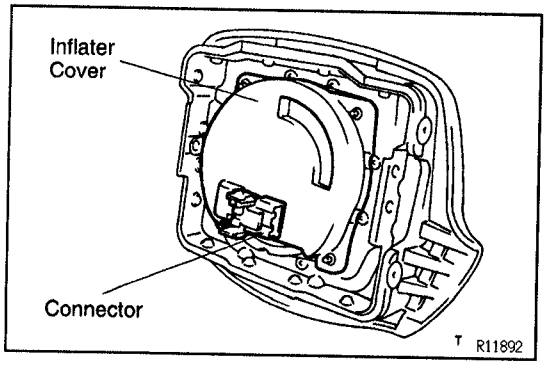

2. REMOVE STEERING WHEEL PAD CONNECTOR

Remove the connector on the steering wheel pad rear surface from the inflater cover.

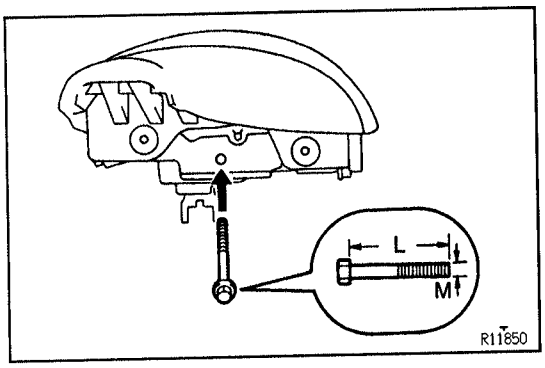

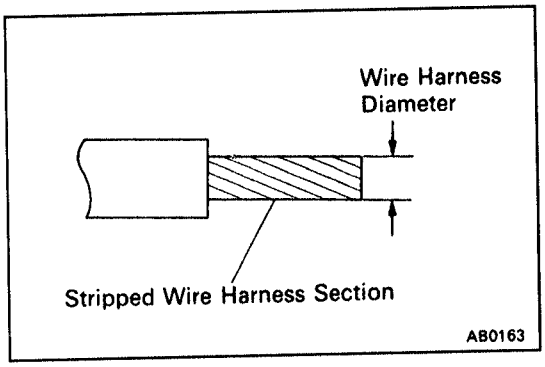

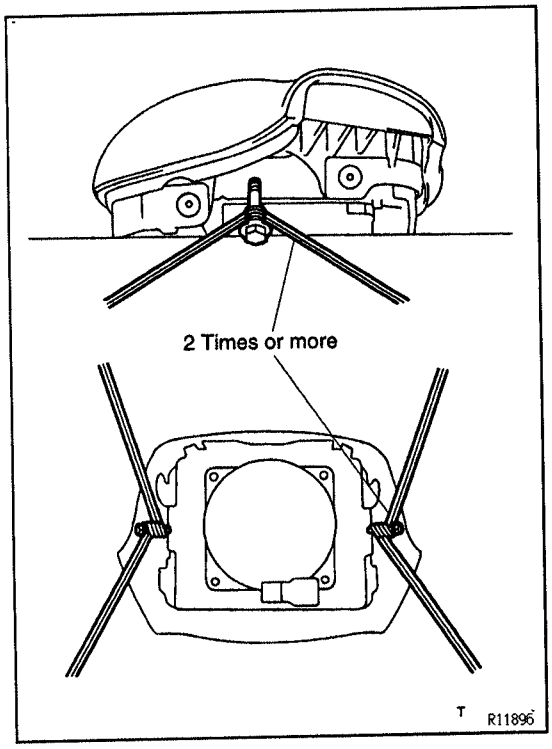

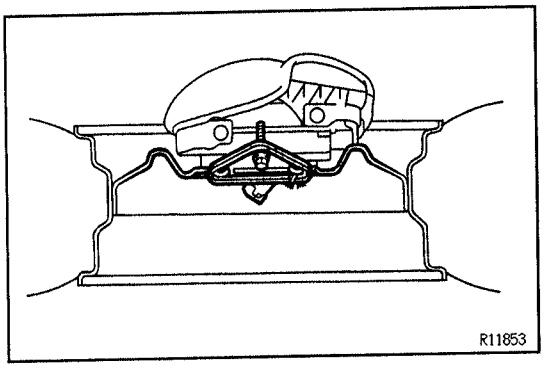

3. FIX STEERING WHEEL PAD TO DISC WHEEL WITH TIRE

(a) Install the 2 bolts with washer in the 2 bolt holes in the steering wheel pad.

Bolt:

L 35.0 mm (1.378 in.)
M 6.0 mm (0.236 in.)
Pitch 1.0 mm (0.039 in.)

NOTICE:

- **Tighten the bolts by hand until the bolts become difficult to turn.**
- **Do not tighten the bolts too much.**

(b) Using a service–purpose wire harness for the vehicle, tie down the steering wheel pad to the disc wheel.

Wire harness: Stripped wire harness section
1.25 mm² or more (0.0019 in² or more)

HINT: To calculate the square of the stripped wire harness section–

Square = 3.14 x (Diameter)² divided by 4

CAUTION: If a wire harness which is too thin or some other thing is used to tie down the steering wheel pad, it may be snapped by the shock when the airbag is deployed. This is highly dangerous. Always use a wire harness for vehicle use which is at least 1.25 mm² (0.0019 in².).

(c) Using 3 wire harnesses, wrap the wire harnesses at least 2 times each around the bolts installed on the left and right sides of the steering wheel pad.

CAUTION:

- **Tightly wind the wire harness around the bolts so that there is no slack.**
- **If there is slackness in the wire harness, the steering wheel pad may come loose due to the shock when the airbag is deployed. This is highly dangerous.**

(d) Face the upper surface of the steering wheel pad upward.

(e) Separately tie the left and right sides of the steering wheel pad to the disc wheel through the hub nut holes.

(f) Position the steering wheel pad connector so that it hangs downward through a hub hole in the disc wheel.

RS

CAUTION:

- **Make sure that the wire harness is tight. It is very dangerous if looseness in the wire harness results in the steering wheel pad coming free through the shock of the airbag deploying.**
- **Always tie down the steering wheel pad with the pad side facing upward. It is very dangerous if the steering wheel pad is tied down with the metal surface facing upward as the wire harness will be cut by the shock of the airbag deploying and the steering wheel pad will be thrown into the air.**

HINT: The disc wheel will be marked by airbag deployment, so use a redundant disc wheel.

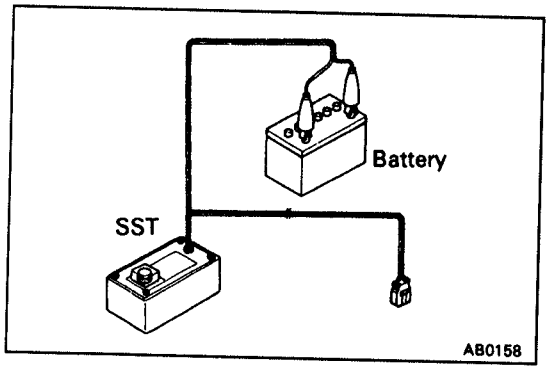

4. CONFIRM FUNCTIONING OF SST
(See page RS–17)
SST 09082–00070

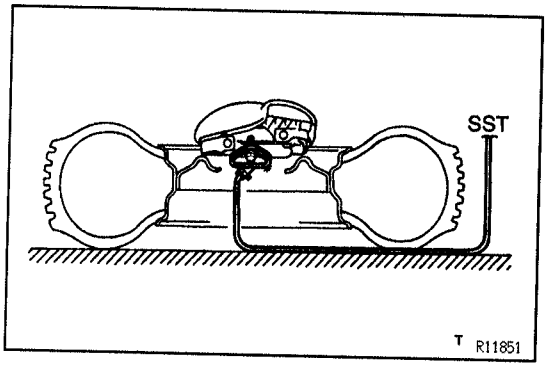

5. INSTALL SST
CAUTION: Place the disc wheel on level ground.

(a) Connect the SST connector to the steering wheel pad connector.
SST 09082–00700
NOTICE: To avoid damaging the SST connector and wire harness, do not lock the secondary lock of the twin lock. Also, provide some slack for the SST wire harness inside the disc wheel.

(b) Move the SST to at least 10 m (33 ft) away from the steering wheel pad tied down on the disc wheel.

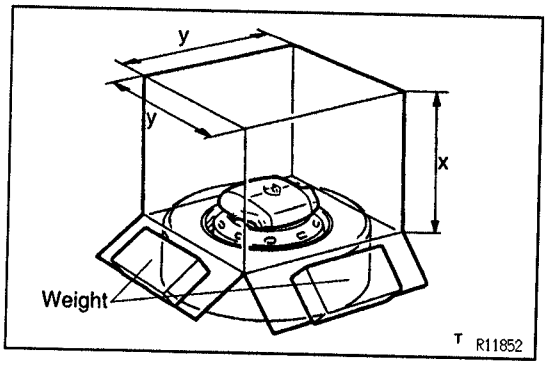

6. COVER STEERING WHEEL PAD WITH CARDBOARD BOX OR TIRES
(Covering Method Using Cardboard Box)
Cover the steering wheel pad with the cardboard box and weigh the cardboard box down in 4 places with at least 196 N (20 kg, 44 lb).
Size of cardboard box:
Must exceed the following dimensions–
x= 460 mm (18.11 in.)
When dimension of the cardboard box exceeds the diameter of the disc wheel with tire, the steering wheel pad is tied to –
x = 460 mm (18.11 in.) + width of tire
y = 650 mm (25.59 in.)
NOTICE: If a cardboard box smaller than the size specified is used, the cardboard box will be broken by the shock of the airbag deployment.

RS

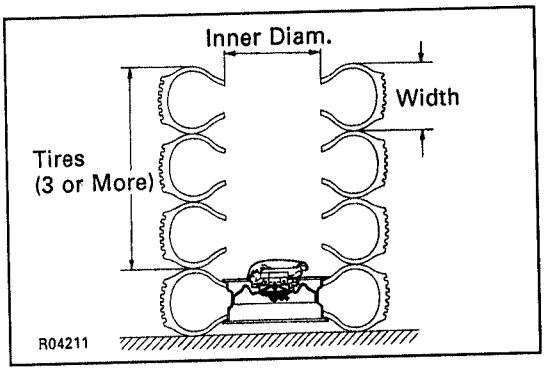

Covering Method Using Tires:

Place at least 3 tires without disc wheel on top of the disc wheel with tire to which the steering wheel pad is tied.

Tire size: Must exceed the following dimensions–

Width 185 mm (7.28 in.)

Inner diam 360 mm (14.17 in.)

CAUTION: Do not use tires with disc wheels.

NOTICE: The tires may be marked by the airbag deployment, so use redundant tires.

7. AIRBAG DEPLOYMENT

(a) Connect the SST red clip to the battery positive (+) terminal and the black clip to the battery negative (–) terminal.

(b) Confirm that no–one is within 10 m (33 ft) of the disc wheel which the steering wheel pad is tied to.

(c) Press the SST activation switch and deploy the airbag.
HINT: The airbag deploys simultaneously as the LED of the SST activation switch lights up.

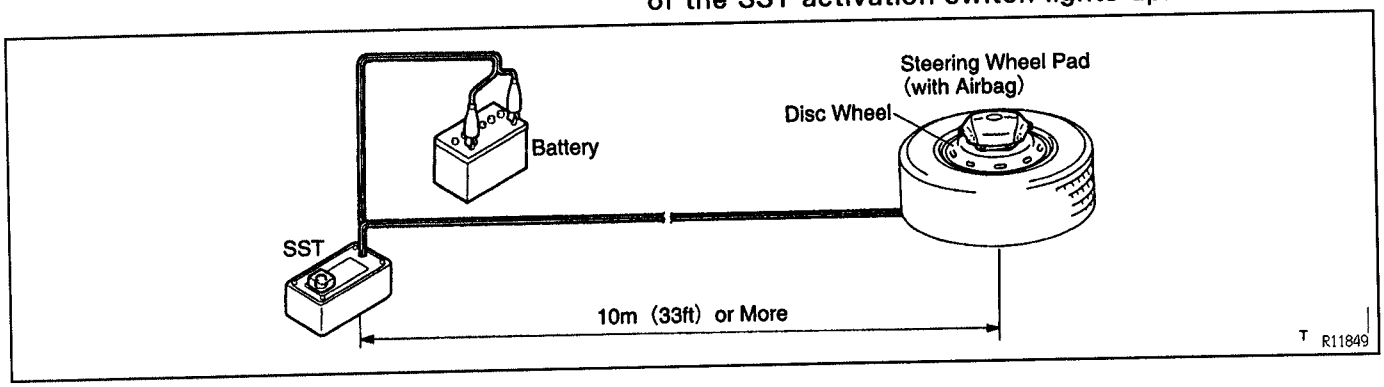

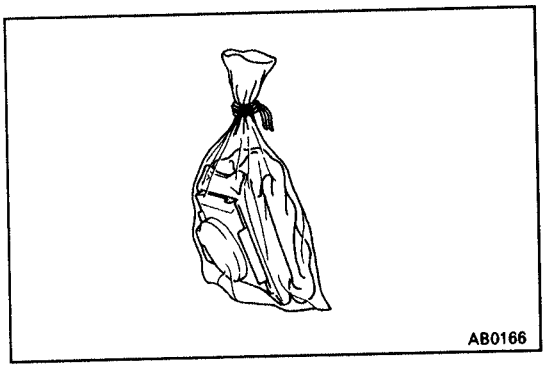

8. DISPOSAL OF STEERING WHEEL PAD (WITH AIRBAG)

CAUTION:

- **The steering wheel pad is very hot when the airbag is deployed, so leave it alone for at least 30 minutes after deployment.**
- **Use gloves and safety glasses when handling a steering wheel pad with a deployed airbag.**
- **Do not apply water, etc. to a steering wheel pad with a deployed airbag.**
- **Always wash your hands with water after completing the operation.**

(a) Remove the steering wheel pad from the disc wheel.

(b) Place the steering wheel pad in a vinyl bag, tie the end tightly and dispose of it in the same way as other general parts.

RS

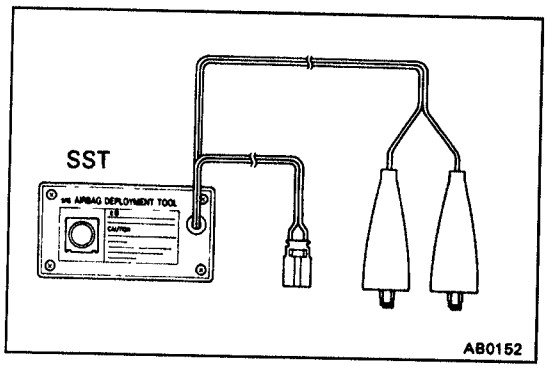

CONFIRM FUNCTIONING OF SST

RS014-0G

When deploying the airbag, always use the specified SST: SRS AIRBAG DEPLOYMENT TOOL.
SST 09082–00700

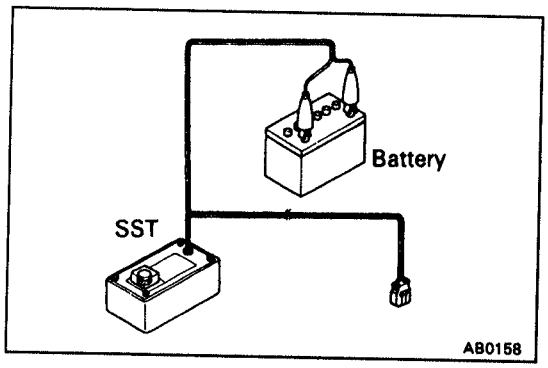

1. CONNECT SST TO BATTERY

Connect the red clip of the SST to the battery positive (+) terminal and the black clip to the battery negative (–) terminal.

HINT: Do not connect the yellow connector which connects with the supplemental restraint system.

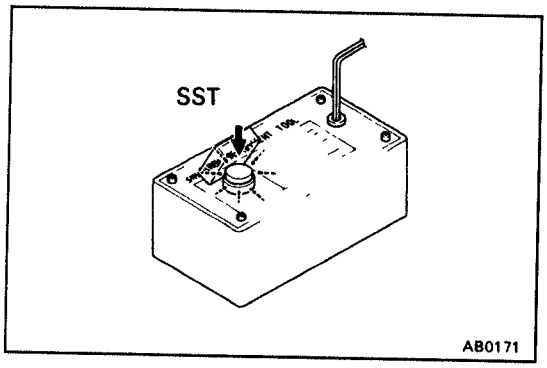

2. CONFIRM FUNCTIONING OF SST

Press the SST activation switch, and confirm the LED of the SST activation switch lights up.

CAUTION: If the LED lights up when the activation switch is not being pressed, SST malfunction is probable, so definitely do not use the SST.

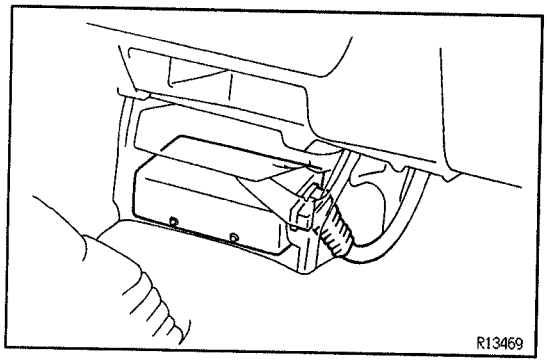

AIRBAG SENSOR ASSEMBLY
INSPECTION ITEMS

RS02D-0G

1. VEHICLES NOT INVOLVED IN A COLLISION

Do a diagnostic system check. (See page RS–26)

2. VEHICLES INVOLVED IN A COLLISION

IF THE SRS IS NOT DEPLOYED

Do a diagnostic system check. (See page RS–26)

IF THE SRS IS DEPLOYED

Replace the airbag sensor assembly.

RS019–0N

REPLACEMENT REQUIREMENTS

In the following cases, replace the airbag sensor assembly.

NOTICE: For replacement of the airbag sensor assembly, see page RS–19, "AIRBAG SENSOR ASSEMBLY REMOVAL AND INSTALLATION" and be sure to follow the correct procedure.

- If the SRS has been deployed in a collision.
- If the airbag sensor assembly has been found to be faulty in troubleshooting.
- If the airbag sensor assembly has been dropped.

RS02E–0A

COMPONENTS

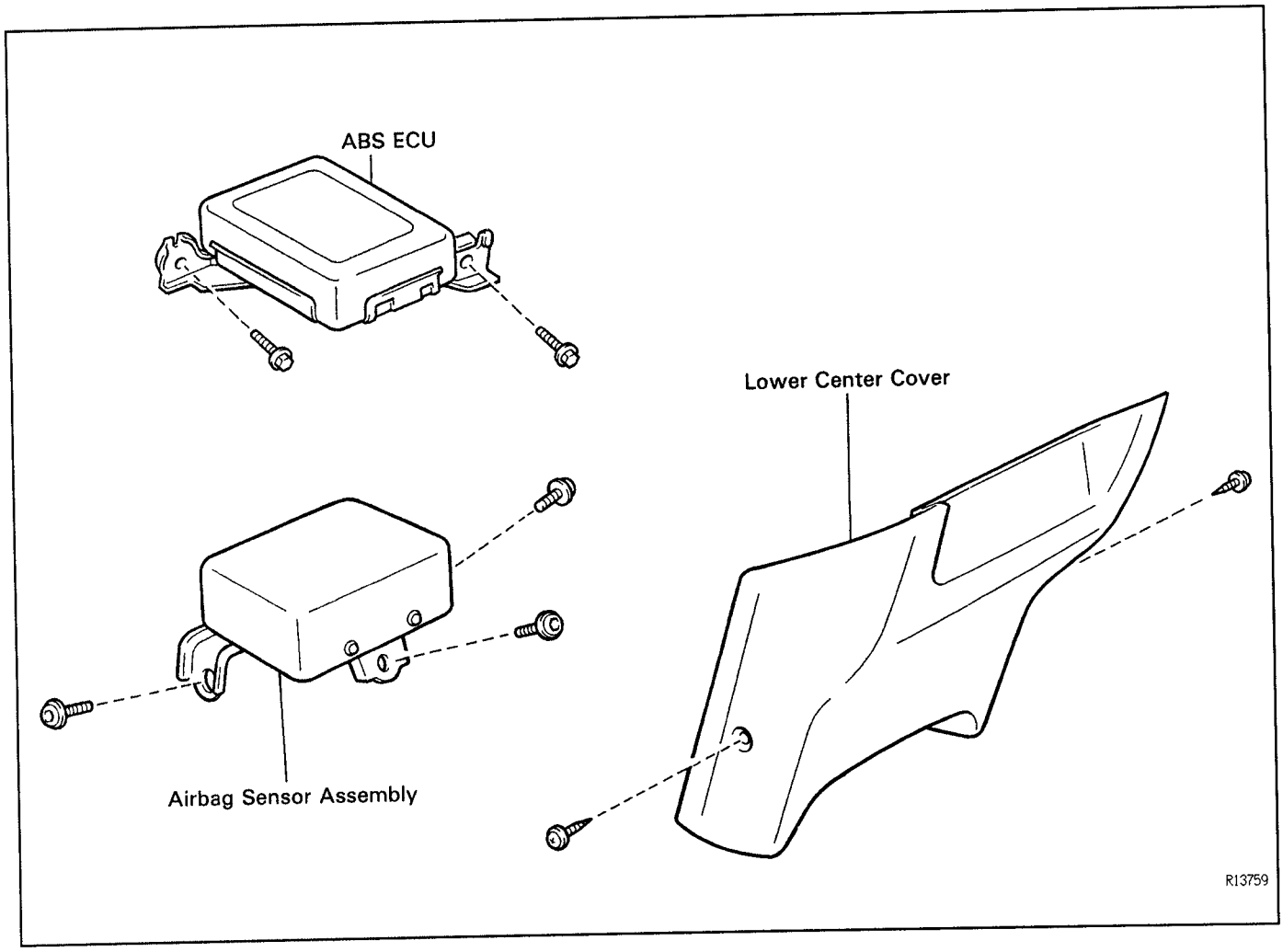

RS

RS0AQ–01

AIRBAG SENSOR ASSEMBLY REMOVAL AND INSTALLATION

NOTICE:

- **Do not open the cover or the case of the ECU and various computers unless absolutely necessary. (If the IC terminals are touched, the IC may be destroyed by static electricity.)**
- **Never use SRS parts from another vehicle. When replacing parts, replace with new parts.**
- **Never reuse the airbag sensor assembly involved in a collision when the airbag has deployed.**
- **Never repair a sensor in order to reuse it.**

1. REMOVE THESE PARTS:

(a) Lower center cover

(b) ABS ECU

2. REMOVE AIRBAG SENSOR ASSEMBLY

(a) Disconnect the connector.

NOTICE: Removal of the connector is done with the sensor assembly installed.

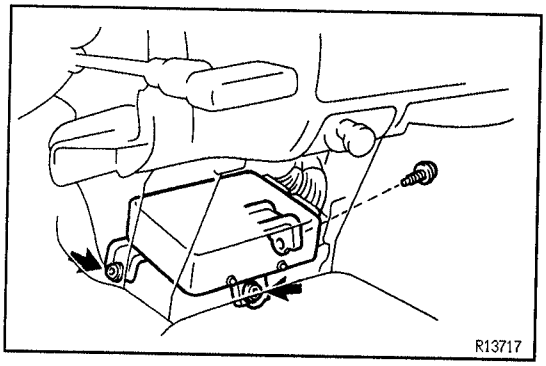

(b) Using a torx wrench, remove the 3 screws and the airbag sensor assembly.

Torx wrench: T40 (Part No. 09042–00020 or locally manufactured tool)

3. INSTALL AIRBAG SENSOR ASSEMBLY

(a) Using a torx wrench, install the airbag sensor assembly with the 3 screws.

Torx wrench: T40 (Part No. 09042–00020 or locally manufactured tool)

Torque: 20 N·m (200 kgf·cm, 14 ft·lbf)

(b) Connect the connector.

NOTICE:

- **Installation of the connector is done with the sensor assembly installed.**
- **Make sure the sensor assembly is installed to the specified torque.**
- **If the sensor assembly has been dropped, or there are cracks, dents or other defects in the case, bracket or connector, replace the sensor assembly with a new one.**
- **When installing the sensor assembly, take care that the SRS wiring does not interfere with other parts and is not pinched between other parts.**
- **After installation, shake the sensor assembly to check that there is no looseness.**

4. INSTALL THE REMOVED PARTS

WIRE HARNESS AND CONNECTOR

RS01B-0L

HINT: The SRS wire harness is integrated with the cowl wire harness assembly.
The wires for the SRS wire harness are encased in a yellow corrugated tube and all the connectors in the system are a standard yellow color.

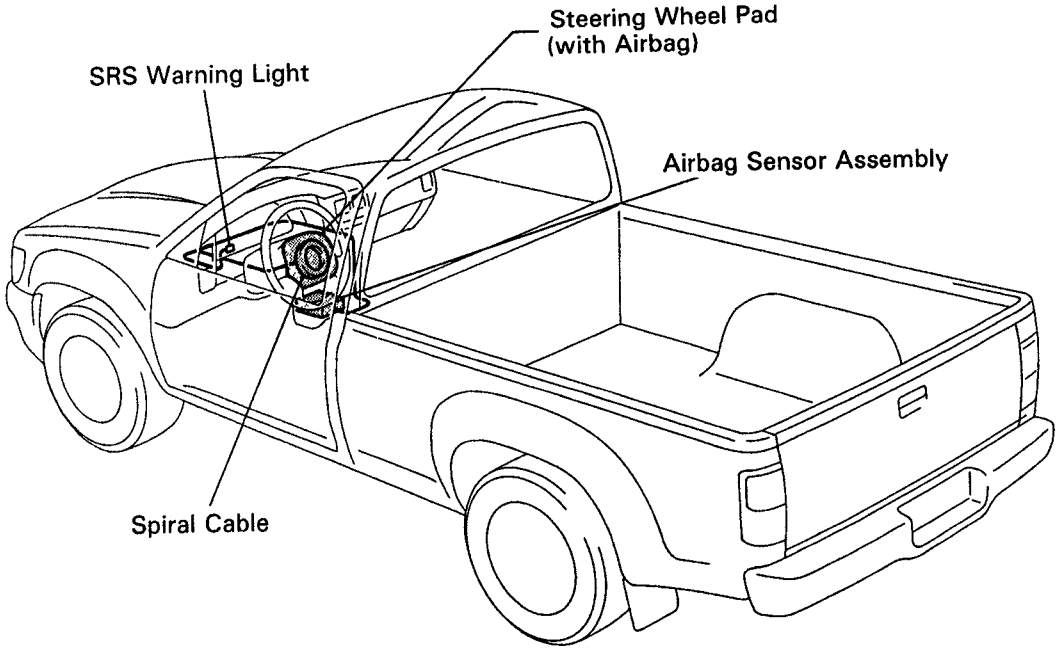

RS01C-0Y

INSPECTION ITEMS

1. **VEHICLES NOT INVOLVED IN A COLLISION**
   Do a diagnostic system check. (See page RS–26)
2. **VEHICLES INVOLVED IN A COLLISION**

(a) Do a diagnostic system check. (See page RS–26)
(b) Check for breaks in all wires of the SRS wire harness, and for exposed conductors.
(c) Check to see if the SRS wire harness connectors are cracked or chipped.

RS

REPLACEMENT REQUIREMENTS

RS01D–0G

In the following cases, replace the wire harness or connector.

- If any part of the SRS wire harness or any connector has been found to be faulty in troubleshooting.
- If any part of the SRS wire harness or any connector has been found to be faulty during the check in items 2–(b) or (c).

NOTICE:

- **If the wire harness used in the SRS is damaged, replace the whole wire harness assembly.**

– MEMO –

TROUBLESHOOTING

HOW TO PROCEED WITH TROUBLESHOOTING RS-24
CUSTOMER PROBLEM ANALYSIS CHECK SHEET RS-25
DIAGNOSIS INSPECTION RS-26
PROBLEM SYMPTOM CHART RS-28
AIRBAG SENSOR ASSEMBLY CONNECTOR RS-29
CIRCUIT INSPECTION RS-30
- DTC (Normal) RS-30
- DTC 11 ..... RS-32
- DTC 12 ..... RS-35
- DTC 14 ..... RS-38
- DTC 31 ..... RS-41
- SRS Warning Light System Malfunction (Always lit up when ignition switch is in LOCK position.) RS-43
- SRS Warning Light System Malfunction (Does not light up when ignition switch is turned to ACC or ON.) RS-44
- Tc Terminal Circuit RS-47

HOW TO PROCEED WITH TROUBLESHOOTING

Perform troubleshooting in accordance with the procedure on the following pages.

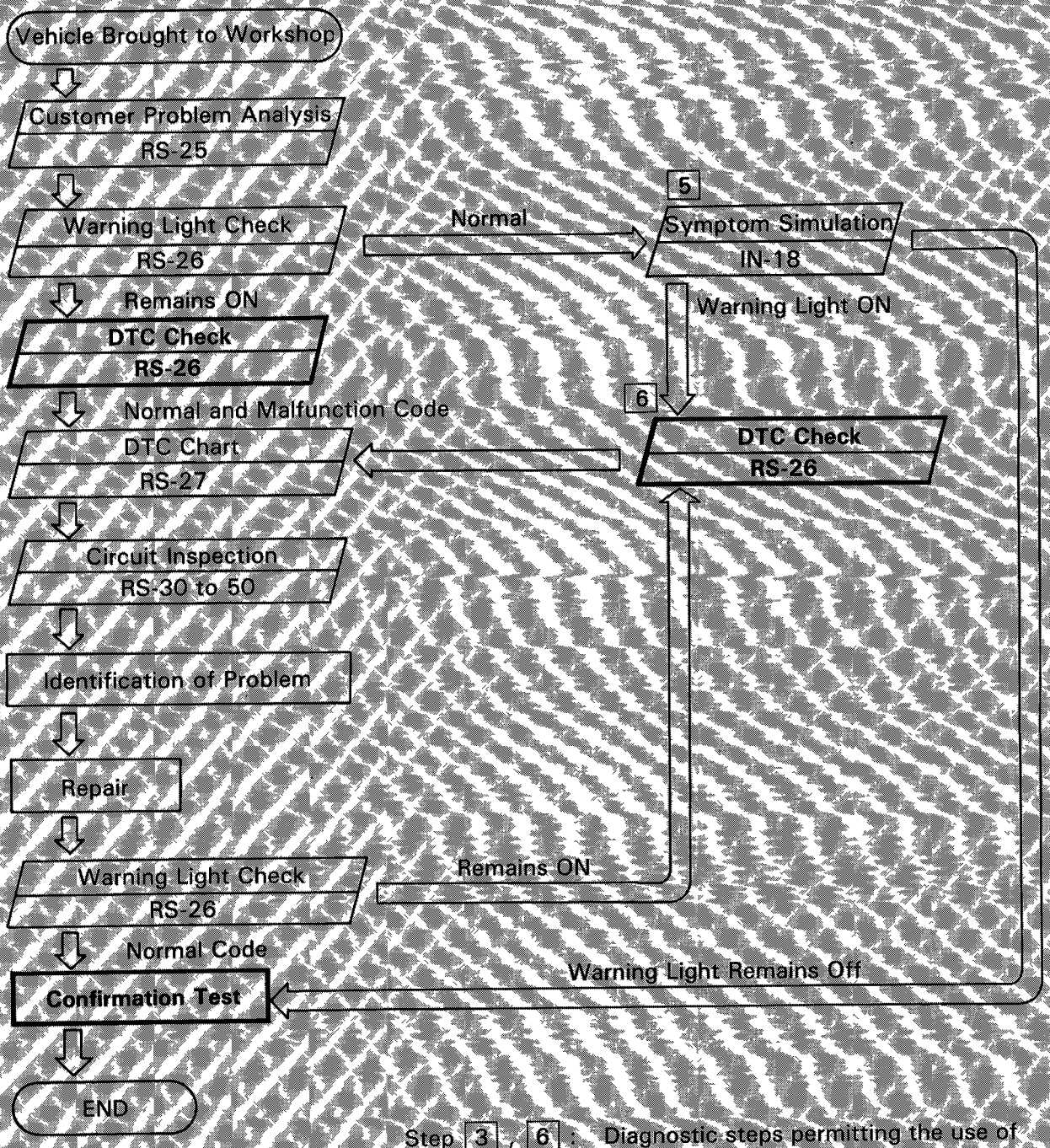

Step 3 , 6 : Diagnostic steps permitting the use of the TOYOTA hand-held tester.

RS

CUSTOMER PROBLEM ANALYSIS CHECK SHEET

Supplemental Restraint System Check Sheet

Inspector's Name :

Customer's Name		**Registration No.**	
		Registration Year	/ /
		Frame No.	
Date Vehicle Brought In	/ /	**Odometer Reading**	km Miles

Date Problem First Occurred	/ /
Weather	☐ Fine ☐ Cloudy ☐ Rainy ☐ Snowy ☐ Other
Temperature	Approx. °C (°F)

Vehicle Operation	☐ Starting ☐ Idling ☐ Driving [☐ Constant speed ☐ Acceleration ☐ Deceleration ☐ Other]
Road Conditions	
Details of Problem	

Vehicle Inspection, Repair History Prior to Occurrence of Malfunction (Including Supplemental Restraint System)	

Diagnosis System Inspection

SRS Warning Light Inspection	1st Time	☐ Remains ON ☐ Sometimes Lights Up ☐ Does Not Light Up
	2nd Time	☐ Remains ON ☐ Sometimes Lights Up ☐ Does Not Light Up
Diagnostic Trouble Code Inspection	1st Time	☐ Normal Code ☐ Malfunction Code [Code.]
	2nd Time	☐ Normal Code ☐ Malfunction Code [Code.]

RS

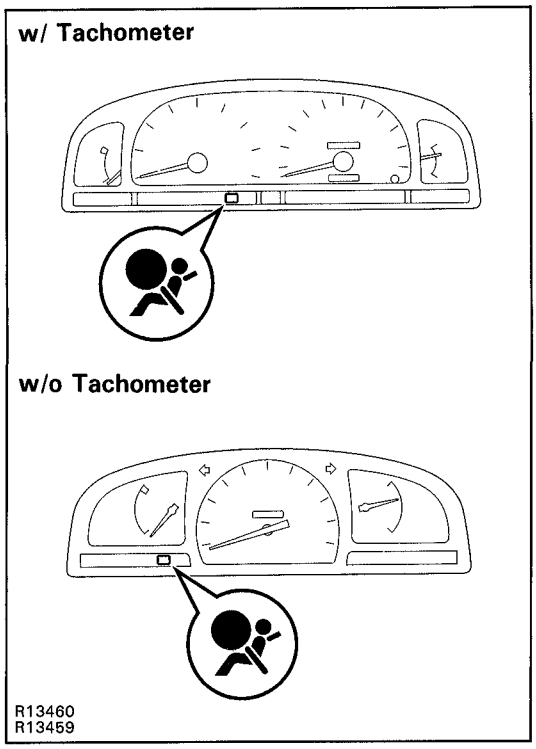

DIAGNOSIS INSPECTION

SRS warning light check

(a) Turn the ignition switch to ACC or ON and check that the SRS warning light lights up.

(b) Check that the SRS warning light goes out after approx. 6 seconds.

HINT:

- When the ignition switch is at ACC or ON and the SRS warning light remains on or flashes, the airbag sensor assembly has detected a malfunction code.
- If, after approx. 6 seconds have elapsed, the SRS warning light sometimes lights up or the SRS warning light lights up even when the ignition switch is OFF, a short in the SRS warning light circuit can be considered likely. Proceed to "SRS warning light system malfunction" on page RS-43, 44.

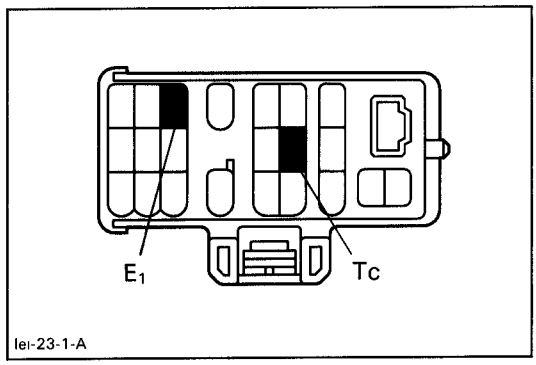

DTC check

Using diagnosis check wire:

1. OUTPUT DTC

(a) Turn the ignition switch to ACC or ON position and wait approx. 20 seconds.

(b) Using SST, connect terminals Tc and E_1 of the DLC1.

SST 09843-18020

NOTICE: Never make a mistake with the terminal connection position as this will cause a malfunction.

2. READ DTC

Read the 2-digit DTC as indicated by the number of times the SRS warning light blinks. As an example, the blinking patterns, normal, 11 and 31 are as shown on the illustration.

- Normal code indication
  The light will blink 2 times per second.
- Malfunction code indication
  The first blinking output indicates the first digit of a 2-digit DTC. After a 1.5 second pause, the second blinking output will indicate the second digit.
  If there are 2 or more codes, there will be a 2.5 second pause between each code. After all the codes have been output, there will be a 4.0 second pause and they will all be repeated.

HINT:

- In the event of a number of trouble codes, indication will begin from the smallest numbered code.
- If it does not output a DTC or outputs a DTC without terminal connection, proceed to the Tc terminal circuit inspection on page RS-47.

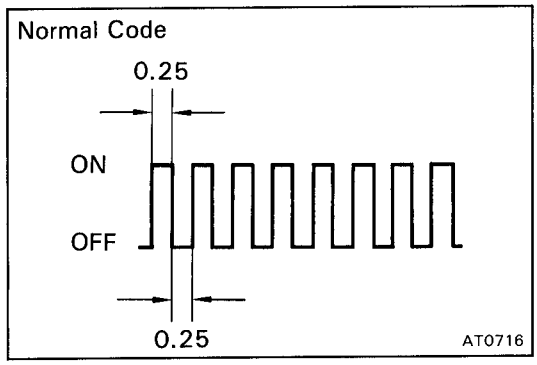

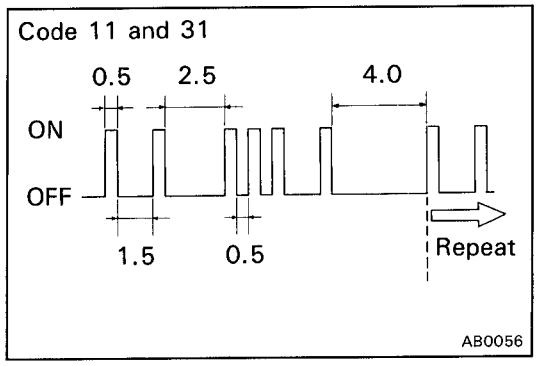

RS

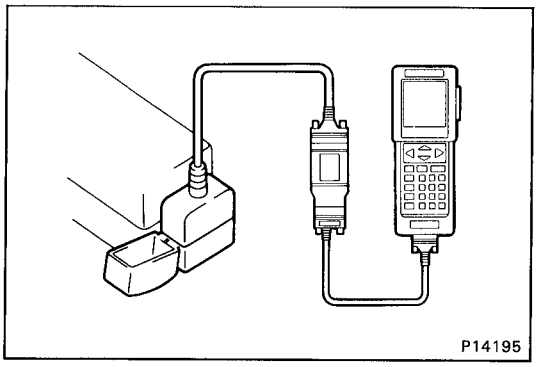

Using TOYOTA hand-held tester:

(a) Hook up the TOYOTA hand-held tester to the DLC1.

(b) Read the DTCs by following the prompts on the tester screen.

HINT: Please refer to the TOYOTA hand-held tester operator's manual for further details.

DTC clearance

When the ignition switch is turned OFF, the DTC is cleared.

DTC CHART

If a mulfunction code is displayed during the DTC check, check the circuit listed for that code in the table below (Proceed to the page given for that circuit).

DTC No. (See page)	Detection Item	Trouble Area	SRS Warning Light
(Normal) (RS-30)	• System normal	–	OFF
	• Source voltage drop	• Battery • Airbag sensor assembly	ON
11 (RS-32)	• Short in D squib circuit (to ground)	• Steering wheel pad (D squib) • Spiral cable • Airbag sensor assembly • Wire harness	ON
12 (RS-35)	• Short in D squib circuit (to B+)	• Steering wheel pad (D squib) • Spiral cable • Airbag sensor assembly • Wire harness	ON
14 (RS-38)	• Open in D squib circuit	• Steering wheel pad (D squib) • Spiral cable • Airbag sensor assembly • Wire harness	ON
31 (RS-41)	• Airbag sensor assembly malfunction	• Airbag sensor assembly	ON

HINT:

- When the SRS warning light remains lit up and the DTC is the normal code, this means a source voltage drop.
  This malfunction is not stored in memory by the airbag sensor assembly and if the power source voltage returns to normal, the SRS warning light will automatically go out.
- When 2 or more codes are indicated, the codes will be displayed in numeral order starting from the lowest numbered code.
- If a code not listed on the chart is displayed, the airbag sensor assembly is faulty.

PARTS LOCATION

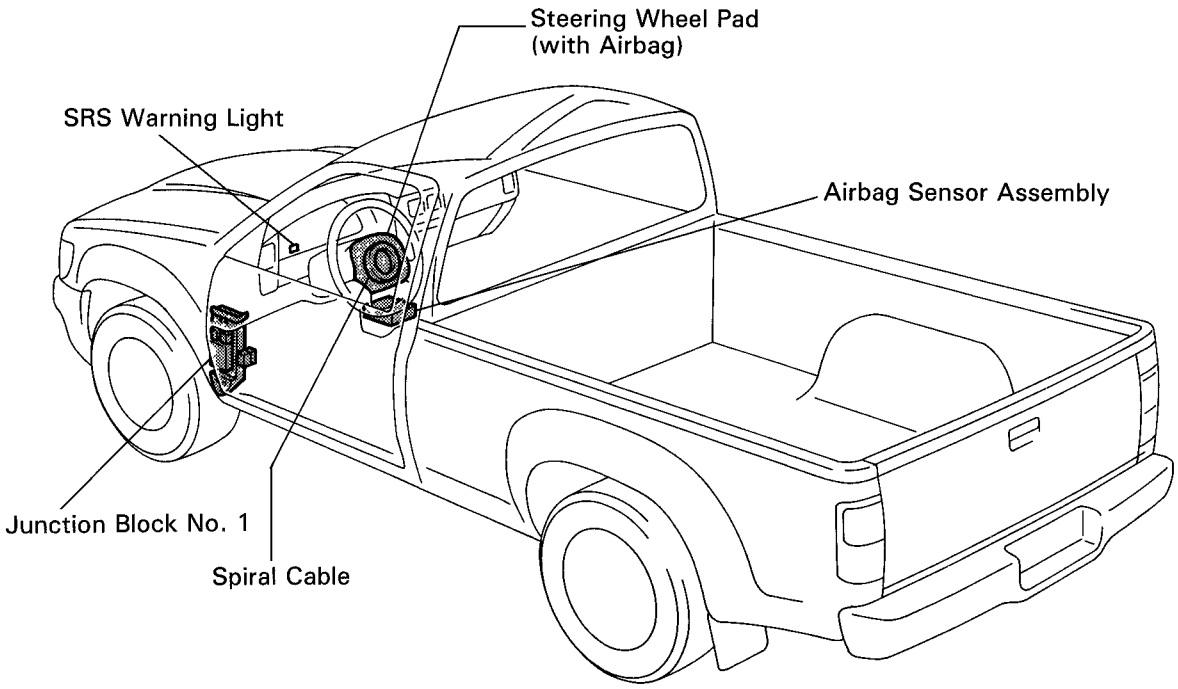

RS

PROBLEM SYMPTOM CHART

Proceed with troubleshooting of each circuit in the table below.

Problem Symptom	Inspection Item	Page
• With the ignition switch at ACC or ON, the SRS warning light sometimes lights up after approx. 6 seconds have elapsed. • SRS warning light is always lit up even when ignition switch is in the LOCK position.	• SRS warning light system malfunction (Always lit up when ignition switch is in LOCK position)	RS-43
• With the ignition switch at ACC or ON, the SRS warning light does not light up.	• SRS warning light system malfunction (Does not light up, when ignition switch is turned to ACC or ON.)	RS-44
• DTC not displayed. • SRS warning light is always lit up with a DTC check procedure. • DTC displayed without Tc and E_1 terminal connection.	• Tc terminal circuit	RS-47

AIRBAG SENSOR ASSEMBLY CONNECTOR

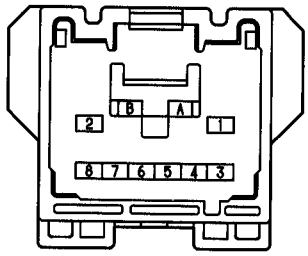

h-8-2-F

No.	Symbol	Terminal Name
A	—	Electrical Connection Check Mechanism
B	—	Electrical Connection Check Mechanism
1	D^-	D squib ⊖
2	D^+	D squib ⊕
3	E_1	Ground
4	E_2	Ground
5	Tc	Diagnosis
6	LA	SRS Warning Light
7	IG2	Power Source (IGN Fuse)
8	ACC	Power Source (CIG Fuse)

DTC (Normal) Source Voltage Drop

CIRCUIT DESCRIPTION

The SRS is equipped with a voltage-increase circuit (DC-DC converter) in the airbag sensor assembly in case the source voltage drops.
When the battery voltage drops, the voltage-increase circuit (DC-DC converter) functions to increase the voltage of the SRS to normal voltage.
The diagnostic system malfunction display for this circuit is different to other circuits – when the SRS warning light remains lit up and the DTC is a normal code, source voltage drop is indicated.
Malfunction in this circuit is not recorded in the airbag sensor assembly, and the source voltage returns to normal, after approx. 10 seconds the SRS warning light automatically goes off.

DTC No.	DTC Detecting Condition	Trouble area
(Normal)	Source voltage drop.	• Battery • Airbag sensor assembly

WIRING DIAGRAM

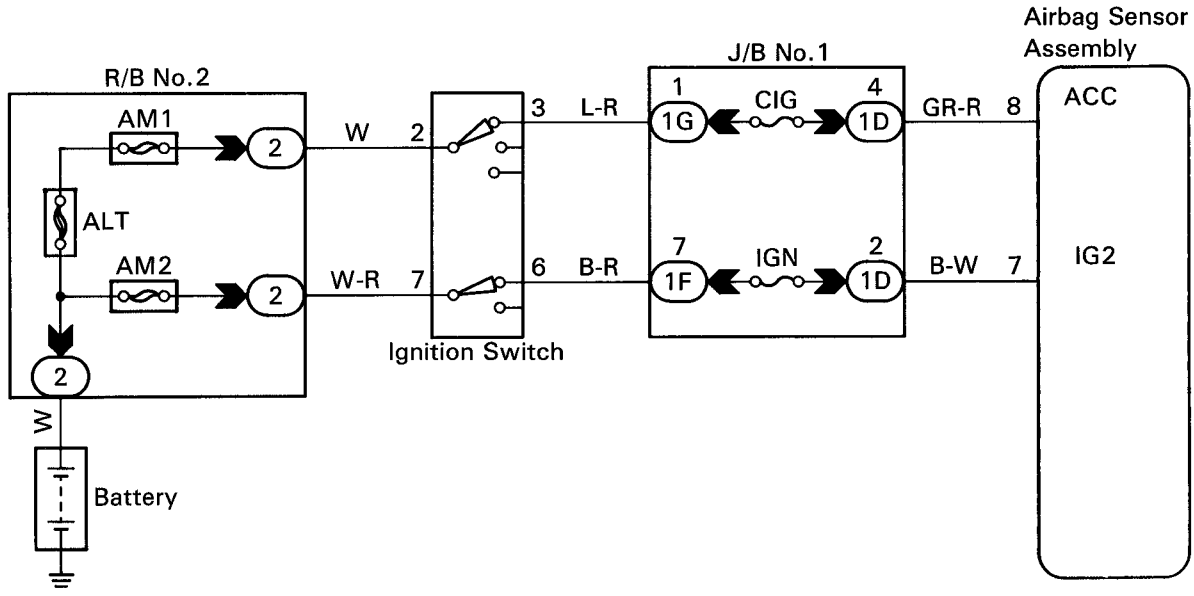

W00384

RS

INSPECTION PROCEDURES

1 Preparation.

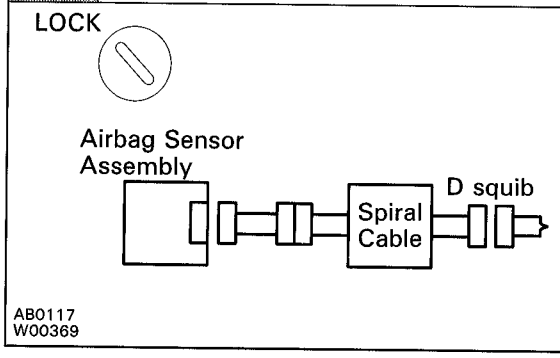

P (1) Disconnect negative (−) terminal cable from the battery, and wait at least 90 seconds.
(2) Remove steering wheel pad. (See SR section)
(3) Disconnect connector of airbag sensor assembly. (See page RS-19)

Caution

Store the steering wheel pad with the front surface facing upward.

2 Check source voltage.

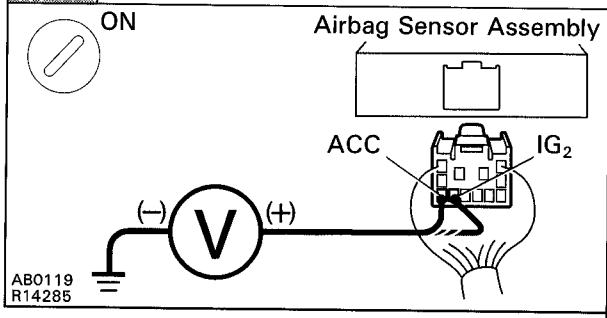

P (1) Connect negative (−) terminal cable to battery.
(2) Turn ignition switch ON.

C Measure voltage at IG_2 or ACC on sensor and operate electric system. (defogger, wiper, headlight, heater blower, etc.)

OK **Voltage: 8 – 14 V**

OK

NG **Check the harness between battery and airbag sensor assembly, and check the battery and charging system.**

3 Does SRS warning light turn off?

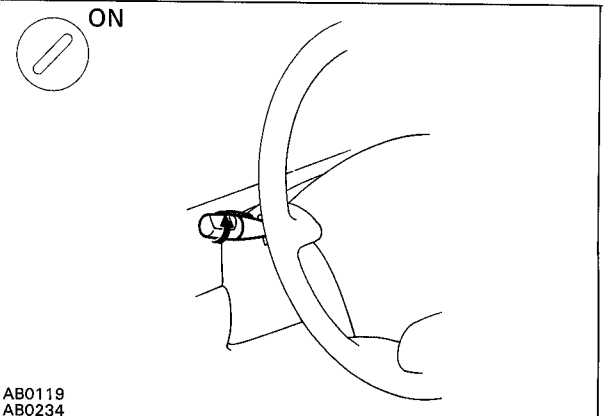

P (1) Turn ignition switch to LOCK.
(2) Connect steering wheel pad connector.
(3) Connect airbag sensor assembly connector.
(4) Turn ignition switch ON.

C Operate electric system checked in 2 C and check that SRS warning light goes off.

YES

NO **Check DTC, and if a malfunction code is output, perform troubleshooting according to malfunction code. If a normal code is output, replace airbag sensor assembly.**

From the results of the above inspection, the malfunctioning part can now be considered normal. To make sure of this, use the simulation method to check.

RS

DTC 11 Short in D Squib Circuit (to Ground)

CIRCUIT DESCRIPTION

The D squib circuit consists of the airbag sensor assembly, spiral cable, steering wheel pad. It causes the SRS to deploy when the SRS deployment conditions are satisfied.
For details of the function of each component, see FUNCTION OF COMPONENTS on page RS-3.
DTC 11 is recorded when ground short is detected in the D squib circuit.

DTC No.	DTC Detecting Condition	Trouble area
11	• Short circuit in squib wire harness (to ground). • Squib malfunction. • Spiral cable malfunction. • Airbag sensor assembly malfunction.	• Steering wheel pad (D squib) • Spiral cable • Airbag sensor assembly • Wire harness

WIRING DIAGRAM

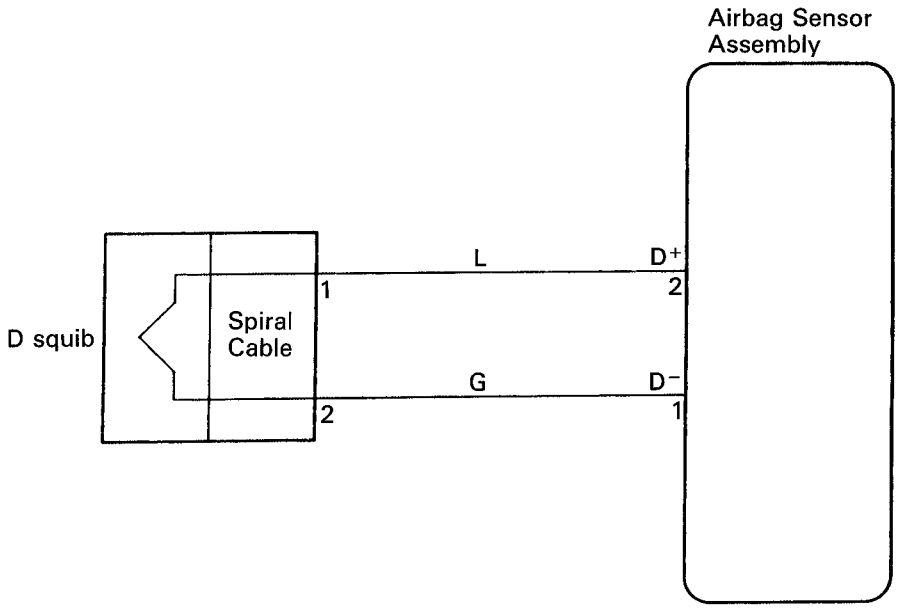

W00385

RS

INSPECTION PROCEDURES

1 **Preparation. (See step 1 on page RS-31)**

2 **Check D squib circuit.**

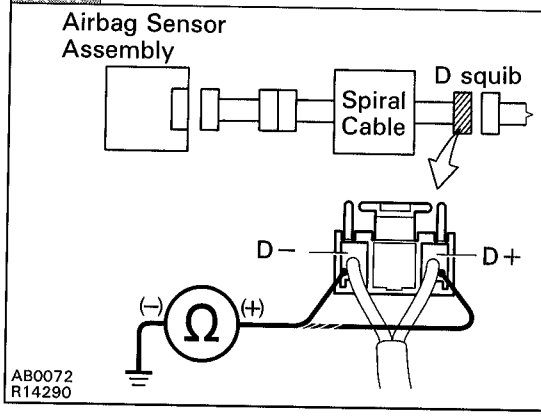

C For the connector (on the spiral cable side) between the spiral cable and steering wheel pad, measure the resistance between D^+, D^- and body ground.

OK **Resistance: 1 MΩ or higher**

OK

NG Go to step 5.

3 **Check airbag sensor assembly.**

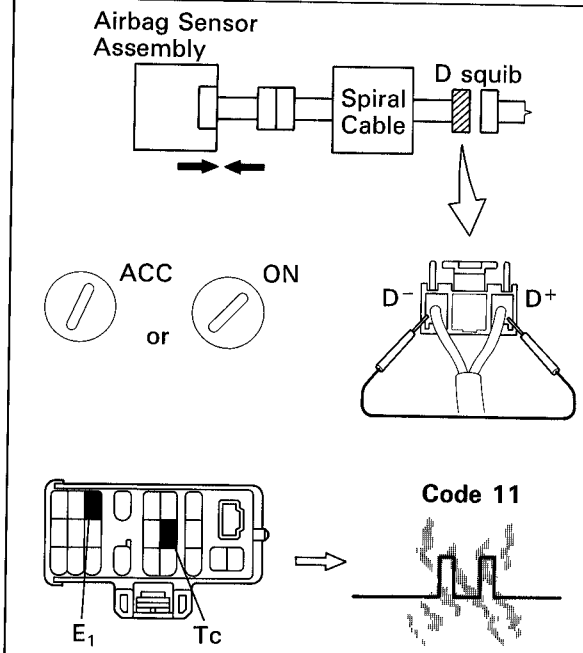

P
(1) Connect connector to airbag sensor assembly.
(2) Using a service wire, connect D^+ and D^- on spiral cable side of connector between spiral cable and steering wheel pad.
(3) Connect negative (–) terminal cable to battery, and wait at least 2 seconds.

C
(1) Turn ignition switch to ACC or ON and wait at least 20 seconds.
(2) Clear malfunction code stored in memory. (See page RS-27)
(3) Turn ignition switch to LOCK, and wait at least 20 seconds.
(4) Turn ignition switch to ACC or ON, and wait at least 20 seconds.
(5) Using SST, connect terminals Tc and E_1 of DLC1.
SST 09843-18020
(6) Check DTC.

OK **DTC 11 is not output.**

Hint Codes other than code 11 may be output at this time, but they are not relevant to this check.

OK

NG **Replace airbag sensor assembly.**

RS

4 Check D squib.

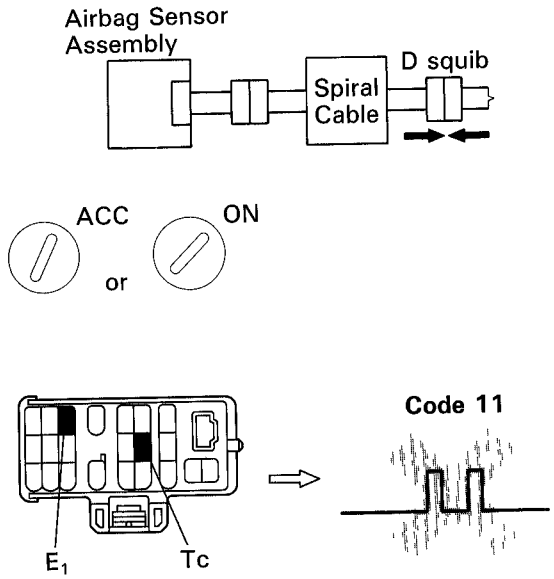

AB0075
AB0118 AB0119
lei-23-1-A AB0057

P
(1) Turn ignition switch to LOCK.
(2) Disconnect negative (−) terminal cable from the battery, and wait at least 90 seconds.
(3) Connect steering wheel pad connector.
(4) Connect negative (−) terminal cable to battery, and wait at least 2 seconds.

C
(1) Turn ignition switch to ACC or ON, and wait at least 20 seconds.
(2) Clear malfunction code stored in memory. (See page RS-27)
(3) Turn ignition switch to LOCK, and wait at least 20 seconds.
(4) Turn ignition switch to ACC or ON, and wait at least 20 seconds.
(5) Using SST, connect terminals Tc and E_1 of DLC1.
SST 09843-18020
(6) Check DTC.

OK **DTC 11 is not output.**

Hint Codes other than code 11 may be output at this time, but they are not relevant to this check.

NG → **Replace steering wheel pad.**

OK

From the results of the above inspection, the malfunctioning part can now be considered normal. To make sure of this, use the simulation method to check. If the malfunctioning part can not be detected by the simulation method, replace all SRS components including the wire harness.

5 Check spiral cable.

RS

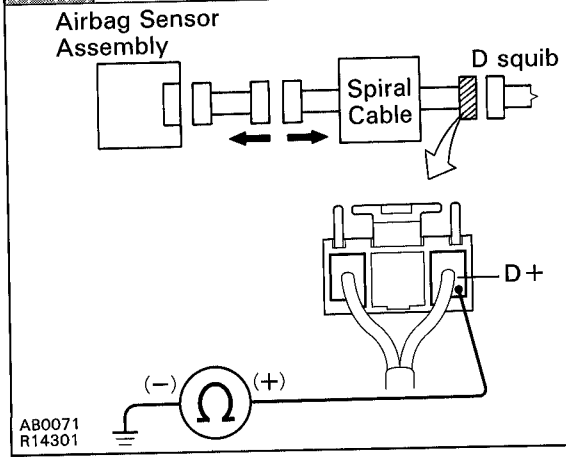

AB0071
R14301

P Disconnect connector between airbag sensor assembly and spiral cable.

C Measure resistance between D^+ on spiral cable side of connector between spiral cable and steering wheel pad and body ground.

OK **Resistance: 1 MΩ or higher**

NG → **Repair or replace spiral cable.**

OK

Repair or replace harness or connector between airbag sensor assembly and spiral cable.

DTC 12 Short in D Squib Circuit (to B+)

CIRCUIT DESCRIPTION

The D squib circuit consists of the airbag sensor assembly, spiral cable and steering wheel pad. It causes the SRS to deploy when the SRS deployment conditions are satisfied.
For details of the function of each component, see FUNCTION OF COMPONENTS on page RS-3.
DTC 12 is recorded when a B+ short is detected in the D squib circuit.

DTC No.	DTC Detecting Condition	Trouble area
12	• Short circuit in squib wire harness (to B+). • Squib malfunction. • Spiral cable malfunction. • Airbag sensor assembly malfunction.	• Steering wheel pad (D squib) • Spiral cable • Airbag sensor assembly • Wire harness

WIRING DIAGRAM

Refer to page RS-31 for the WIRING DIAGRAM

INSPECTION PROCEDURES

1 **Preparation. (See step 1 on page RS-31)**

2 **Check D squib circuit.**

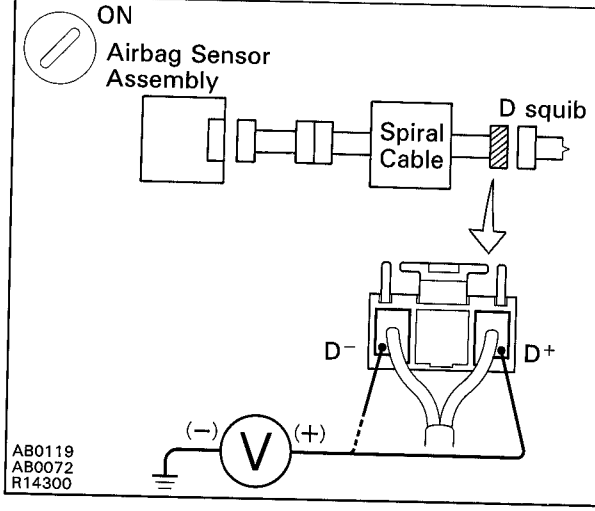

C For the connector (on the spiral cable side) between the spiral cable and steering wheel pad, measure the voltage between D+, D− and body ground.

OK **Voltage: 0 V**

OK

NG **Go to step 5.**

RS

3 Check airbag sensor assembly.

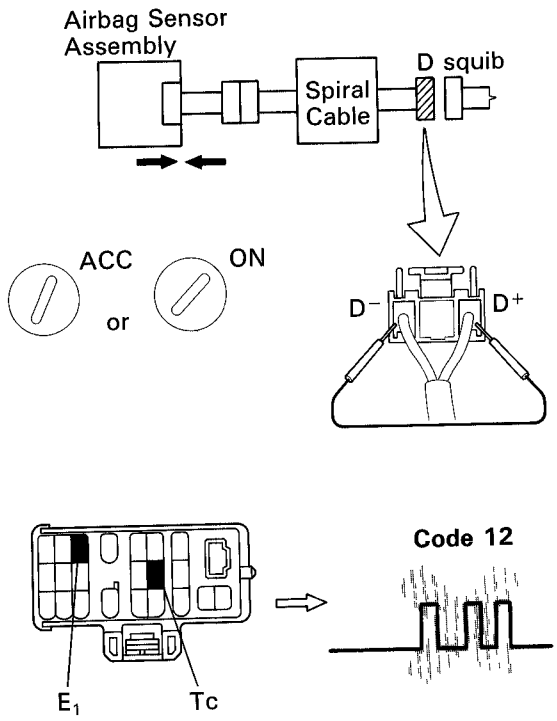

AB0074
AB0069
AB0118 AB0119
lei-23-1-A FI1389

P (1) Connect connector to airbag sensor assembly.
(2) Using a sevice wire, connect D^+ and D^- on spiral cable side of connector between spiral cable and steering wheel pad.
(3) Connect negative (−) terminal cable to battery, and wait at least 2 seconds.

C (1) Turn ignition switch to ACC or ON and wait at least 20 seconds.
(2) Clear malfunction code stored in memory. (See page RS-27)
(3) Turn ignition switch to LOCK, and wait at least 20 seconds.
(4) Turn ignition switch to ACC or ON, and wait at least 20 seconds.
(5) Using SST, connect terminals Tc and E_1 of DLC1.
SST 09843-18020
(6) Check DTC.

OK **DTC 12 is not output.**

Hint Codes other than code 12 may be output at this time, but they are not relevant to this check.

OK

NG **Replace airbag sensor assembly.**

RS

4 Check D squib.

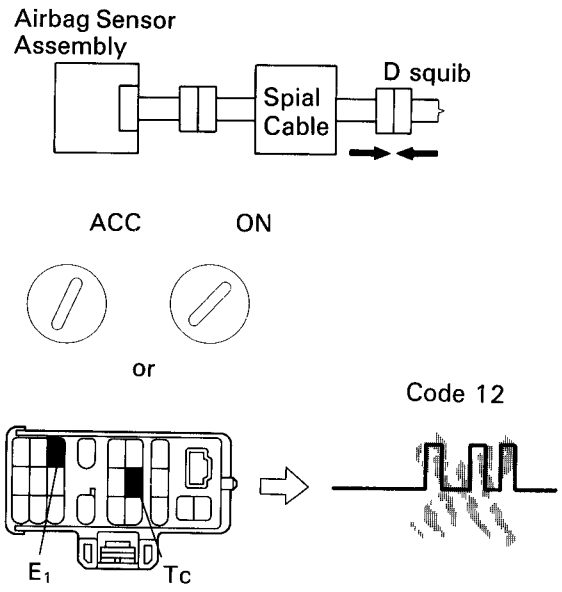

AB0075
AB0118 AB0119
Ier-23-1-A FI1389

P
(1) Turn ignition switch to LOCK.
(2) Disconnect negative (−) terminal cable from the battery, and wait at least 90 seconds.
(3) Connect steering wheel pad connector.
(4) Connect negative (−) terminal cable to battery, and wait at least 2 seconds.

C
(1) Turn ignition switch to ACC or ON, and wait at least 20 seconds.
(2) Clear malfunction code stored in memory. (See page RS-27)
(3) Turn ignition switch to LOCK, and wait at least 20 seconds.
(4) Turn ignition switch to ACC or ON, and wait at least 20 seconds.
(5) Using SST, connect terminals Tc and E_1 of DLC1.
SST 09843-18020
(6) Check DTC.

OK **DTC 12 is not output.**

Hint Codes other than code 12 may be output at this time, but they are not relevant to this check.

OK

NG **Replace steering wheel pad.**

Form the results of the above inspection, the malfunctioning part can now be considered normal. To make sure of this, use the simulation method to check.

5 Check spiral cable.

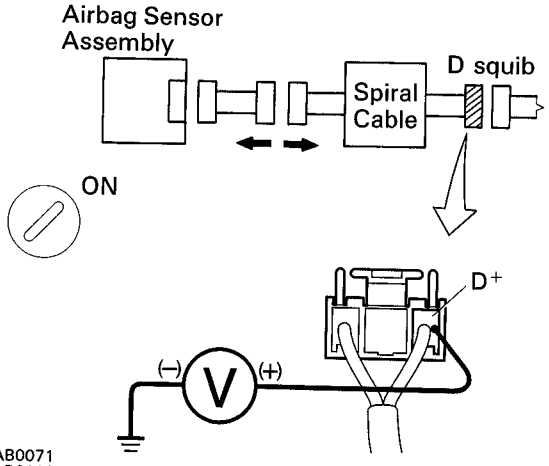

AB0071
AB0119
R14288

P
(1) Turn ignition switch to LOCK.
(2) Disconnect connector between airbag sensor assembly and spiral cable.
(3) Turn ignition switch ON.

C Measure voltage at D^+ on spiral cable side of connector between spiral cable and steering wheel pad.

OK **Voltage: 0 V**

OK

NG **Repair or replace spiral cable.**

Repair or replace harness or connector between airbag sensor assembly and spiral cable.

RS

DTC 14 Open in D Squib Circuit

CIRCUIT DESCRIPTION

The D squib circuit consists of the airbag sensor assembly, spiral cable and steering wheel pad. It causes the airbag to deploy when the airbag deployment conditions are satisfied.
For details of the function of each component, see FUNCTION OF COMPONENTS on page RS-3.
DTC 14 is recorded when an open is detected in the D squib circuit.

DTC No.	DTC Detecting Condition	Trouble area
14	• Open circuit in D^+ wire harness or D^- wire harness of squib. • D Squib malfunction. • Spiral cable malfunction. • Airbag sensor assembly malfunction.	• Steering wheel pad (D squib) • Spiral cable • Airbag sensor assembly • Wire harness

WIRING DIAGRAM

Refer to page RS-31 for the WIRING DIAGRAM

INSPECTION PROCEDURES

1 **Preparation. (See step 1 on page RS-31)**

2 **Check D squib circuit.**

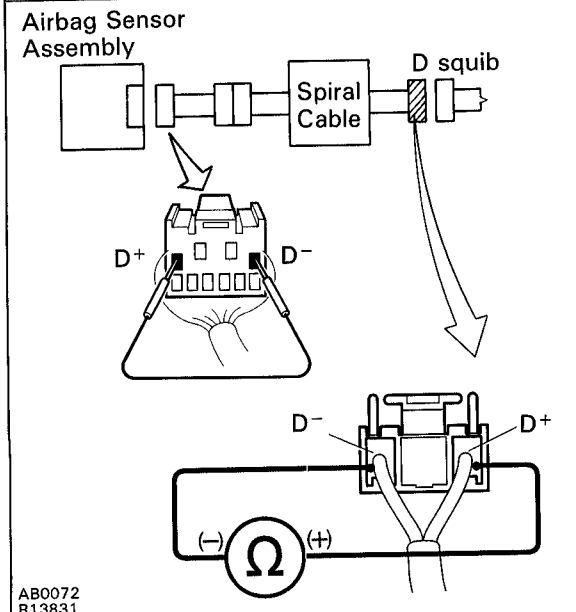

P Using a service wire, connect D^+ and D^- on airbag sensor assembly side connector.

C For the connector (on the spiral cable side) between the spiral cable and steering wheel pad, measure the resistance between D^+ and D^-.

OK **Resistance: Below 1 Ω**

OK

NG → Go to step 5.

3 Check airbag sensor assembly.

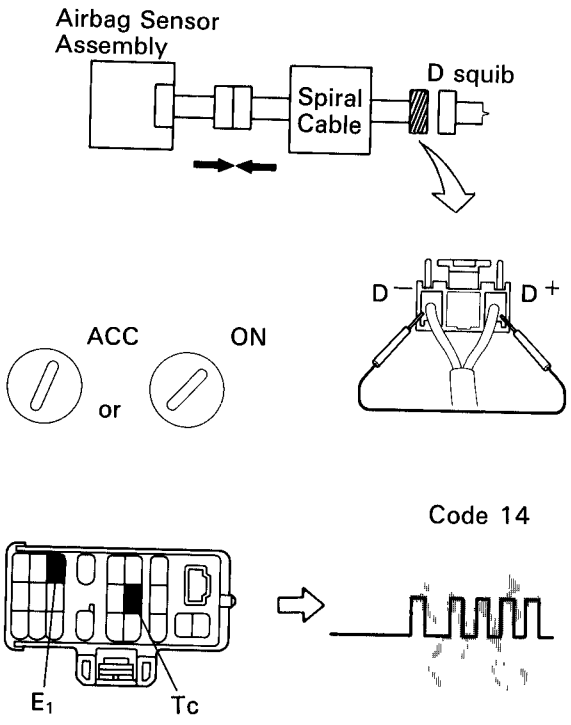

AB0074
AB0069
AB0118 AB0119
lei-23-1-A FI1391

P
(1) Connect connector to airbag sensor assembly.
(2) Using a service wire, connect D^+ and D^- on spiral cable side of connector between spiral cable and steering wheel pad.
(3) Connect negative (−) terminal cable to battery, and wait at least 2 seconds.

C
(1) Turn ignition switch to ACC or ON and wait at least 20 seconds.
(2) Clear malfunction code stored in memory. (See page RS-27)
(3) Turn ignition switch to LOCK, and wait at least 20 seconds.
(4) Turn ignition switch to ACC or ON, and wait at least 20 seconds.
(5) Using SST, connect terminals Tc and E_1 of DLC1.
SST 09843-18020
(6) Check DTC.

OK **DTC 14 is not output.**

Hint Codes other than code 14 may be output at this time, but they are not relevant to this check.

OK

NG → **Replace airbag sensor assembly.**

RS

4 Check D squib.

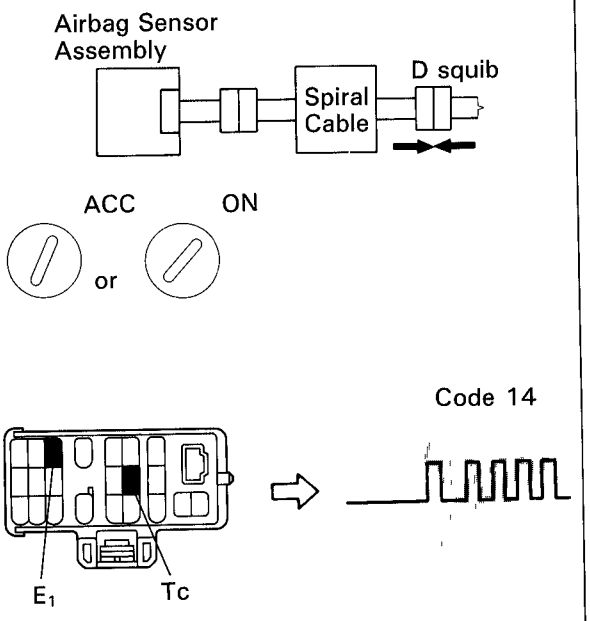

AB0075
AB0118 AB0119
lei-23-1-A FI1391

P
(1) Turn ignition switch to LOCK.
(2) Disconnect negative (—) terminal cable from the battery, and wait at least 90 seconds.
(3) Connect steering wheel pad (squib) connector.
(4) Connect negative (—) terminal cable to battery, and wait at least 2 seconds.

C
(1) Turn ignition switch to ACC or ON, and wait at least 20 seconds.
(2) Clear malfunction code stored in memory. (See page RS-27)
(3) Turn ignition switch to LOCK, and wait at least 20 seconds.
(4) Turn ignition switch to ACC or ON, and wait at least 20 seconds.
(5) Using SST, connect terminals Tc and E_1 of DLC1.
SST 09843-18020
(6) Check DTC.

OK **DTC 14 is not output.**

Hint Codes other than code 14 may be output at this time, but they are not relevant to this check.

OK

NG **Replace steering wheel pad.**

From the results of the above inspection, the malfunctioning part can now be considered normal. To make sure of this, use the simulation method to check.

5 Check spiral cable.

RS

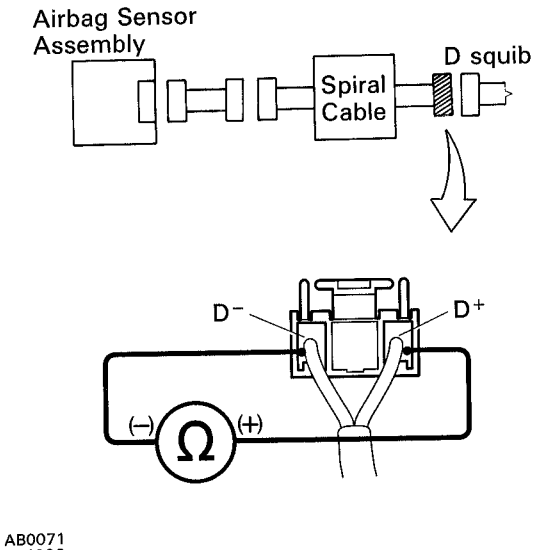

AB0071
R14286

P Disconnect connector between airbag sensor assembly and spiral cable.

C For the connector (on the spiral cable side) between the spiral cable and steering wheel pad, measure the resistance between D^+ and D^-.

OK **Resistance: Below 1 Ω**

OK

NG **Repair or replace spiral cable.**

6 **Check harness between airbag sensor assembly and spiral cable.**

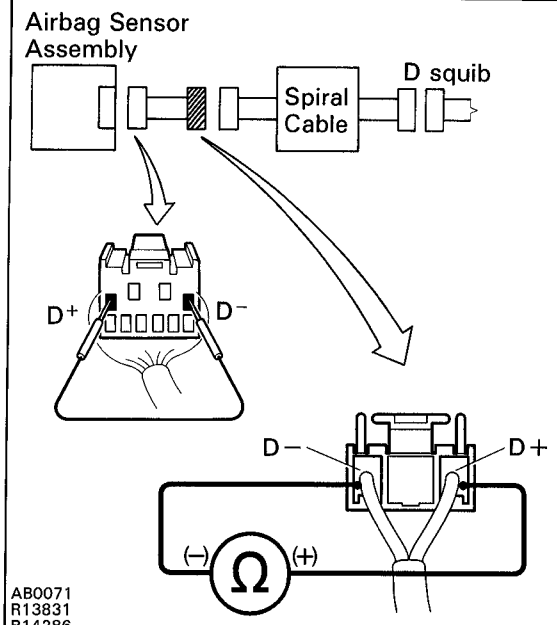

P Using a service wire, connect D^+ and D^- on airbag sensor assembly side connector.

C For the connector (on the airbag sensor assembly side) between the airbag sensor assembly and spiral cable, measure the resistance between D^+ and D^-.

OK **Resistance: Below 1 Ω**

OK

NG **Repair or replace harness or connector between airbag sensor assembly and spiral cable.**

From the results of the above inspection, the malfunctioning part can now be considered normal. To make sure of this, use the simulation method to check.

DTC 31 Airbag Sensor Assembly Malfunction

CIRCUIT DESCRIPTION

The airbag sensor assembly consists of a airbag sensor, safing sensor, drive circuit, diagnosis circuit and ignition control, etc.
It receives signals from the airbag sensors, judges whether or not the SRS must be activated, and diagnostic system malfunction.
DTC 31 is recorded when occurrence of a malfunction in the airbag sensor assembly is detected.

DTC No.	DTC Detecting Condition	Trouble area
31	Airbag sensor assembly malfunction	• Airbag sensor assembly

INSPECTION PROCEDURES

HINT: When a malfunction code other than code 31 is displayed at the same time, first repair the malfunction indicated by the malfunction code other than code 31.

1 **Preparation. (See step 1 on page RS-31)**

RS

2 Check voltage at IG2 and ACC of airbag sensor assembly.

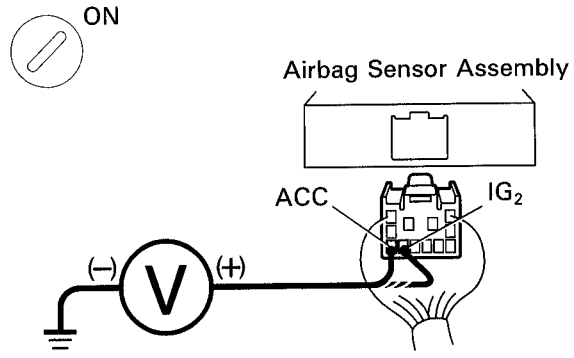

P (1) Connect negative (−) terminal cable to battery.
(2) Turn ignition switch ON.

C Measure voltage between terminals IG2 and ACC of airbag sensor assembly and body ground.

OK **Voltage: Below 16 V**

OK

NG **Check battery and charging system. (See charging system section)**

3 Is DTC 31 output again?

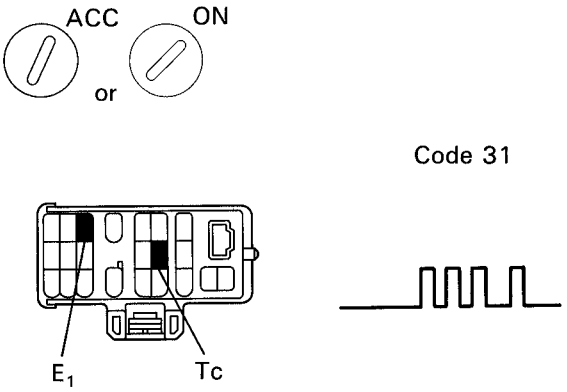

P Clear malfunction code.

C (1) Turn ignition switch to LOCK, and wait at least 20 seconds.
(2) Turn ignition switch to ACC or ON, and wait at least 20 seconds.
(3) Repeat operation in step (1) and (2) at least 5 times.
(4) Using SST, connect terminals Tc and E_1 of DLC1.
SST 09843—18020
(5) Check DTC.

YES

NO **Using simulation method, reproduce malfunction symptoms (See INTRODUCTION).**

Replace airbag sensor assembly.

RS

SRS Warning Light System Malfunction (Always lit up when ignition switch is in LOCK position.)

CIRCUIT DESCRIPTION

The SRS warning light is located on the combination meter.
When the SRS is normal, the SRS warning light lights up for approx. 6 seconds after the ignition switch is turned from LOCK position to ACC or ON position, and then turns off automatically.
If there is a malfunction in the SRS, the SRS warning light lights up to inform the driver of the abnormality.
When terminals Tc and E_1 of the DLC1 are connected, the DTC is displayed by the blinking of the SRS warning light.

WIRING DIAGRAM

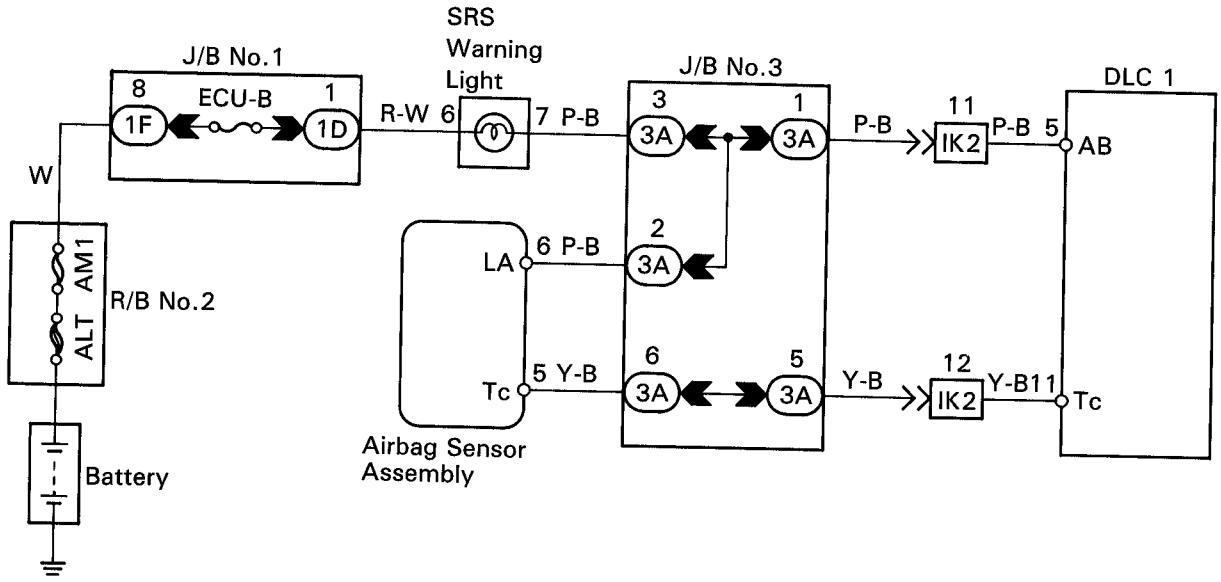

R13821

RS

INSPECTION PROCEDURES

1 **Preparation. (See Step [1] on page RS-31)**

2 **Does SRS warning light turn off?**

LOCK



Airbag Sensor Assembly

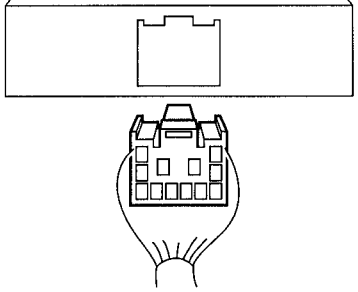

AB0117
N12639

P (1) Disconnect airbag sensor assembly connector.
(2) Connect negative (−) terminal cable to battery.

C Check operation of SRS warning light.

YES

NO **Check SRS warning light circuit or terminal AB circuit of DLC1.**

Replace airbag sensor assembly.

SRS Warning Light System Malfunction (Does not light up when ignition switch is turned to ACC or ON.)

RS

CIRCUIT DESCRIPTION

The SRS warning light is located on the combination meter.
When the SRS is normal, the SRS warning light lights up for approx. 6 seconds after the ignition switch is turned from LOCK position to ACC or ON position, and then turns off automatically.
If there is a malfunction in the SRS, the SRS warning light lights up to inform the driver of the abnormality.
When terminals Tc and E_1 of the DLC1 are connected, the DTC is displayed by the blinking of the SRS warning light.

WIRING DIAGRAM

Refer to page RS-31 for the WIRING DIAGRAM

INSPECTION PROCEDURES

1 Check ECU-B Fuse.

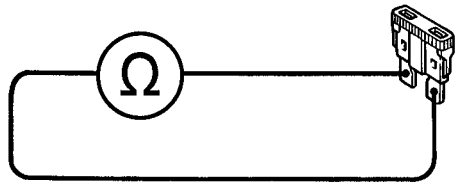

N14677

P Remove ECU-B fuse.

C Check continuity of ECU-B fuse.

OK **Continuity.**

Hint
- Fuse may be burnt out even if it appears to be OK during visual inspection.
- If fuse is OK, install it.

OK

NG > **Go to step 5.**

2 Preparation. (See step 1 on page RS-31)

3 Check SRS warning light circuit.

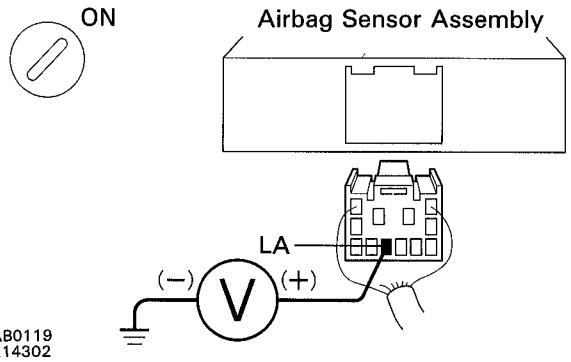

AB0119
R14302

P (1) Connect negative (−) terminal cable to battery.
(2) Turn ignition switch to ACC or ON.

C Measure voltage LA terminal of harness side connector of airbag sensor assembly.

OK **Voltage: 10 − 14 V**

OK

NG > **Check SRS warning light bulb/repair SRS warning light circuit.**

RS

4 Does SRS warning light come on?

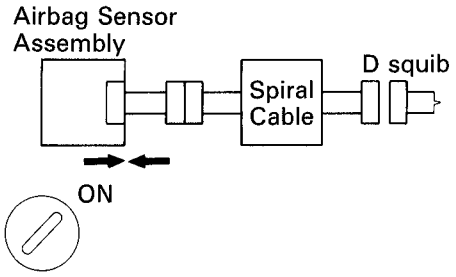

w/ Tachometer

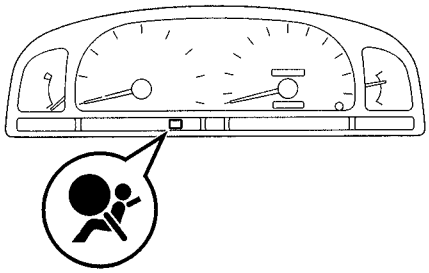

w/o Tachometer

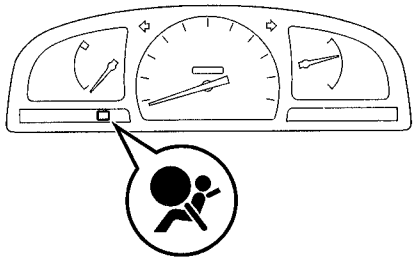

AB0074
AB0119
R13460
R13459

P (1) Disconnect negative (−) terminal cable from the battery, and wait at least 90 seconds.
(2) Connect airbag sensor assembly connector.
(3) Connect negative (−) terminal cable to battery, and wait at least 2 seconds.
(4) Turn ignition switch to ACC or ON.

C Check operation of SRS warning light.

YES

NO → **Check terminal LA of airbag sensor assembly. If normal, replace airbag sensor assembly.**

RS

From the results of the above inspection, the malfunctioning part can now be considered normal. To make sure of this, use the simulation method to check.

5 Is new ECU-B fuse burnt out again?

YES

NO → **Using simulation method, reproduce malfunction symptoms (See INTRODUCTION).**

Check harness between ECU-B fuse and SRS warning light.

Tc Terminal Circuit

CIRCUIT DESCRIPTION

By connecting terminals Tc and E_1 of the DLC1 the airbag sensor assembly is set in the DTC output mode. The DTCs are displayed by the blinking of the SRS warning light.

WIRING DIAGRAM

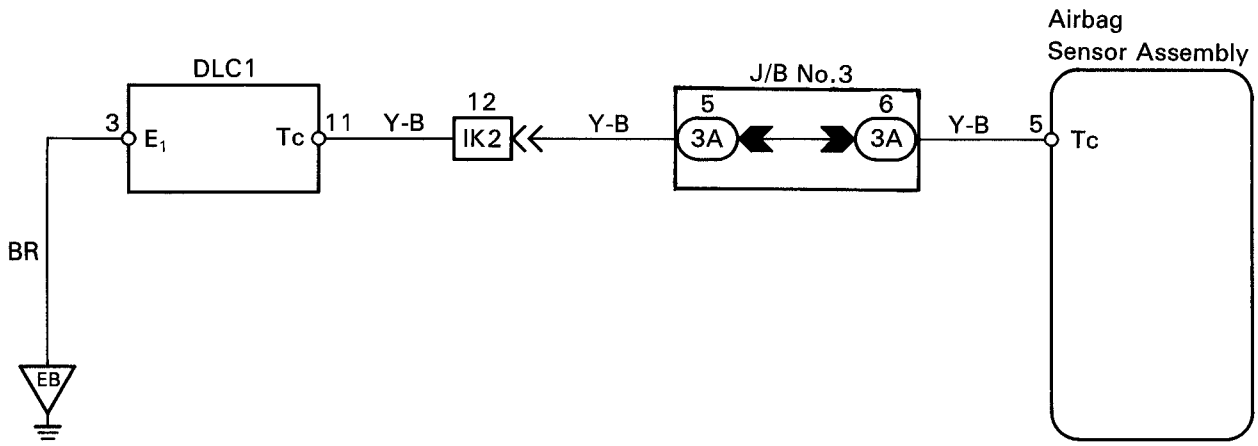

RS

INSPECTION PROCEDURES

P Preparation C Check

HINT: If the DTC is not displayed, do the following troubleshooting:

1 Does SRS warning light light up for approx. 6 seconds?

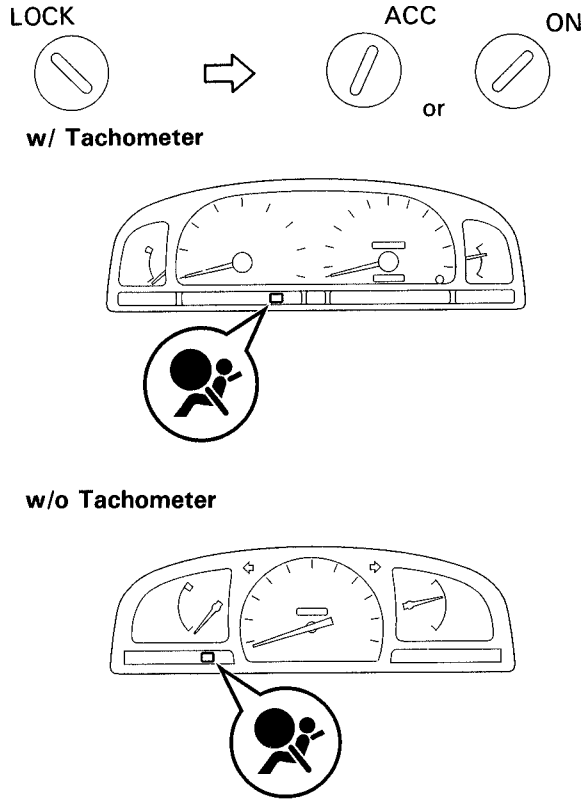

AB0117 AB0118 AB0119
R13460
R13459

C Check operation of SRS warning light after ignition switch turned from LOCK position to ACC or ON position.

YES

NO > **Check SRS warning light system. (See page RS-26)**

2 Check voltage between terminals Tc and E_1 of DLC1.

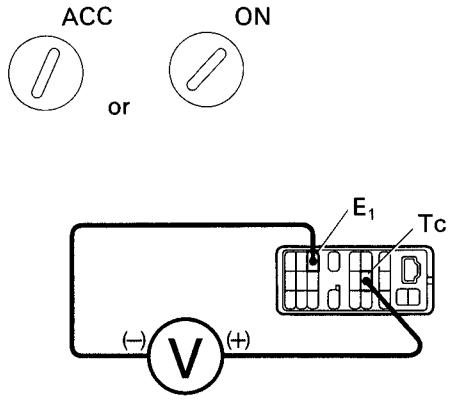

AB0118 AB0119
R14305

P Turn ignition switch to ACC or ON.

C Measure voltage between terminals Tc and E_1 of DLC1.

OK **Voltage: 10 – 16 V**

NG

OK > **Go to step 4.**

3 Check voltage between terminals Tc of DLC1 and body ground.

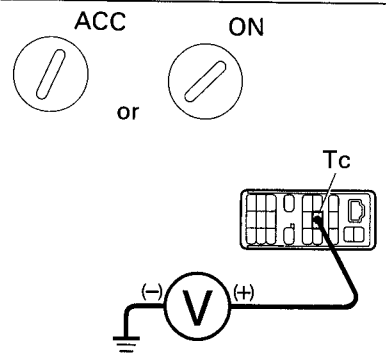

AB0118 AB0119
R14304

C Measure voltage between terminals Tc of DLC1 and body ground.

OK **Voltage: 10 – 16 V**

NG

OK ⟩ **Check harness between terminal E_1 of DLC1 and body ground.**

4 Check airbag sensor assembly.

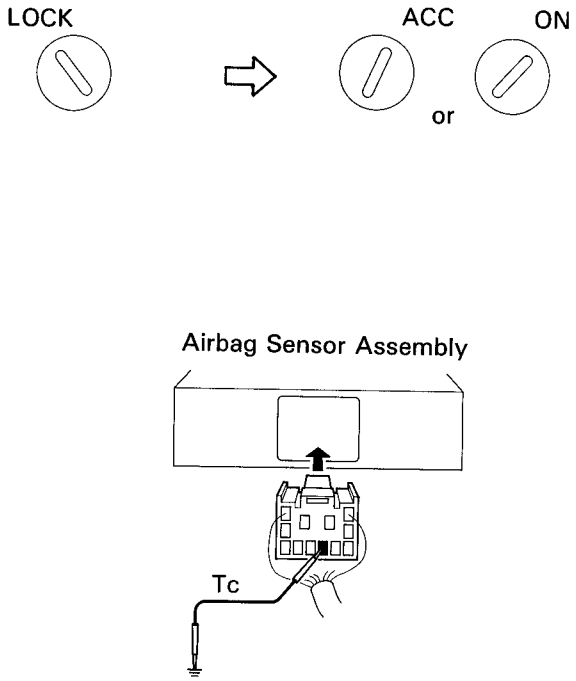

AB0117 AB0118 AB0119
R12658

P
(1) Turn ignition switch to LOCK.
(2) Disconnect negative (−) terminal cable from the battery, and wait at least 90 seconds.
(3) Remove steering wheel pad. (See SR section)
(4) Disconnect airbag sensor assembly connector.
(5) Insert service wire into terminal Tc from back side as shown.
(6) Connect airbag sensor assembly connector with service wire.
(7) Connect negative (−) terminal cable to battery.
(8) Turn ignition switch to ACC or ON and wait at least 20 seconds.
(9) Connect service wire of terminal Tc to body ground.

C Check operation of SRS warning light.

OK **SRS warning light comes on.**

Notice

Never make a mistake with the terminal connection position as this will cause a malfunction.

NG

OK ⟩ **Check harness between airbag sensor assembly and DLC1.**

Replace airbag sensor assembly.

RS

HINT: If the DTC is displayed without a DTC check procedure, do the following troubleshooting.

1 **Preparation. (See step 1 on page RS-31)**

OK

2 **Check resistance between terminal Tc of airbag sensor assembly and body ground.**

LOCK

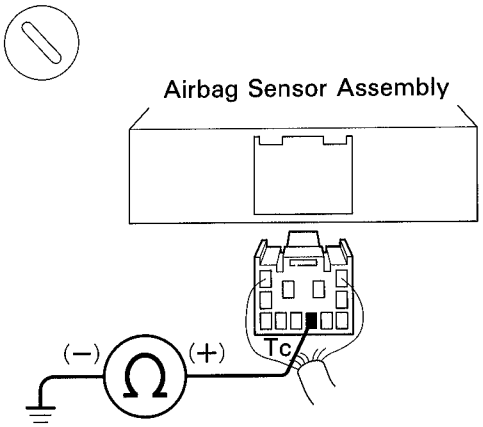

AB0117
R14303

C Check resistance between terminal Tc of airbag sensor assembly connector and body ground.

OK **Resistance: 1 MΩ or Higher**

NG > **Repair or replace harness or connector.**

OK

Replace airbag sensor assembly.

RS

SERVICE SPECIFICATIONS

TORQUE SPECIFICATIONS

RS02T–ON

Part tightened	N·m	kgf·cm	ft·lbf
Steering wheel	34	350	25
Steering wheel pad	8.8	90	78 in.·lbf
Airbag sensor assembly	20	200	14

RS

BODY ELECTRICAL SYSTEM

PRECAUTION ..... BE– 2
PREPARATION ..... BE– 2
POWER SOURCE ..... BE– 3
IGNITION SWITCH ..... BE– 4
HEADLIGHT AND TAILLIGHT SYSTEM ..... BE– 7
TURN SIGNAL AND HAZARD WARNING SYSTEM ..... BE– 15
INTERIOR LIGHT SYSTEM ..... BE– 18
BACK–UP LIGHT SYSTEM ..... BE– 20
STOP LIGHT SYSTEM ..... BE– 23
WIPER AND WASHER SYSTEM ..... BE– 25
COMBINATION METER ..... BE– 29
POWER WINDOW CONTROL SYSTEM ..... BE– 43
POWER DOOR LOCK CONTROL SYSTEM ..... BE– 48
POWER MIRROR CONTROL SYSTEM ..... BE– 54
AUDIO SYSTEM ..... BE– 57
CLOCK ..... BE– 76
CRUISE CONTROL SYSTEM ..... BE– 78
SERVICE SPECIFICATIONS ..... BE– 118

PRECAUTION

BE1HP-06

Take care to observe the following precautions when performing inspections or removal and replacement of body electrical related parts.

BE2T9-01

HEADLIGHT SYSTEM

- Halogen bulbs have pressurized gas inside and require special handling. They can burst if scratched or dropped. Hold a bulb only by its plastic or metal case. Don't touch the glass part of a bulb with bare hands.

BE2YA-01

SRS (SUPPLEMENTAL RESTRAINT SYSTEM)

- The TOYOTA TACOMA is equipped with an SRS (Supplemental Restraint System) such as the driver airbag and front passenger airbag. Failure to carry out service operation in the correct sequence could cause the SRS to unexpectedly deploy during servicing, possibly leading to a serious accident. Before servicing (including removal or installation of parts, inspection or replacement), be sure to read the precautinary notices in the RS section.

BE1GN-0N

AUDIO SYSTEM

- If the negative (−) terminal cable is disconnected from the battery, the preset AM, FM 1 and FM 2 stations stored in memory are erased, so be sure to note the stations and reset them after the negative (−) terminal cable is reconnected to the battery.

BE1CP-0L

MOBILE COMMUNICATION SYSTEM

- If the vehicle is equipped with a mobile communication system, refer to precautions in the IN section.

PREPARATION

BE00B-03

SST (SPECIAL SERVICE TOOLS)

	09843–18020 Diagnosis Check Wire	

BE

BE00C-04

RECOMMENDED TOOLS

	09082–00050 TOYOTA Electrical Tester Set.	

BE00D-05

EQUIPMENT

Voltmeter	
Ammeter	
Ohmmeter	
Test lead	
Thermometer	Engine coolant temperature sender gauge
Syphon	Brake fluid level warning switch

Oil bath	Engine oil level warning switch
Bulb (3.4 W)	Fuel sender gauge, Integration relay
Bulb (21 W)	Turn signal flasher relay
Dry cell battery	Fuel sender gauge, Power mirror
Torque wrench	
Clip remover	For removing cowl louver

BE2L6-02

SSM (SPECIAL SERVICE MATERIALS)

08833–00080	Adhesive 1344, THREE BOND 1344, LOCTITE 242 or equivalent	Low oil pressure warning switch Engine coolant temperature sender gauge

POWER SOURCE

PARTS LOCATION

BE2T8-01

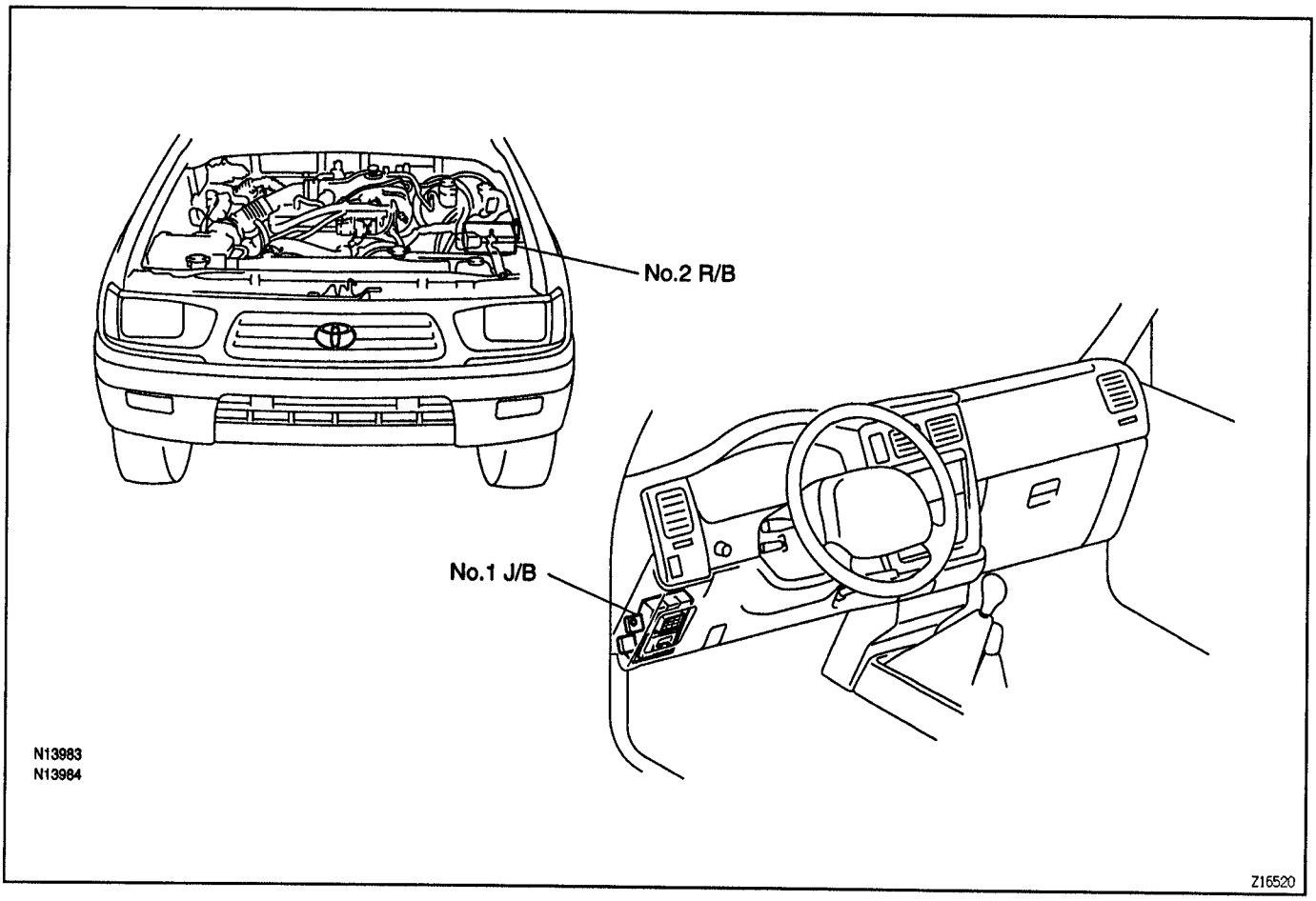

IGNITION SWITCH
PARTS LOCATION

BE00F-0C

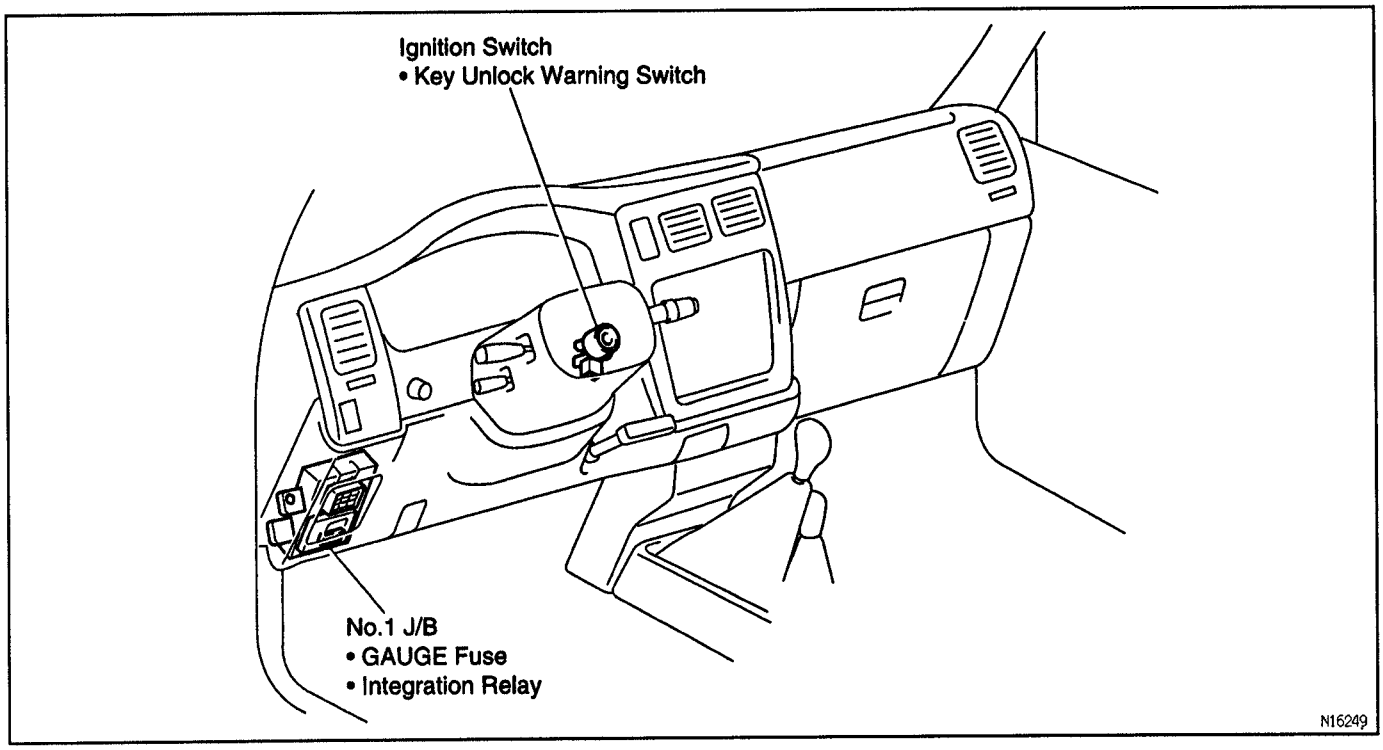

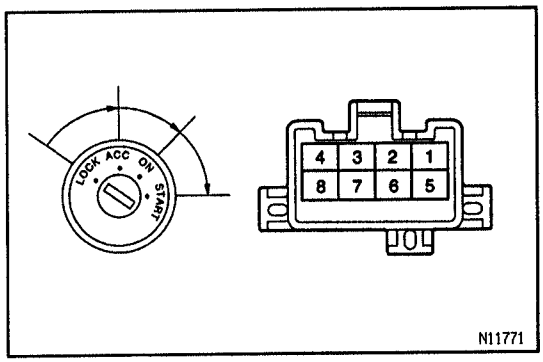

BE00G-0E

IGNITION SWITCH INSPECTION

INSPECT SWITCH CONTINUITY

Switch position	Tester connection	Specified condition
LOCK	–	No continuity
ACC	2 – 3	Continuity
ON	2 – 3 – 4 6 – 7	Continuity
START	1 – 2 – 4 6 – 7 – 8	Continuity

If continuity is not as specified, replace the switch.

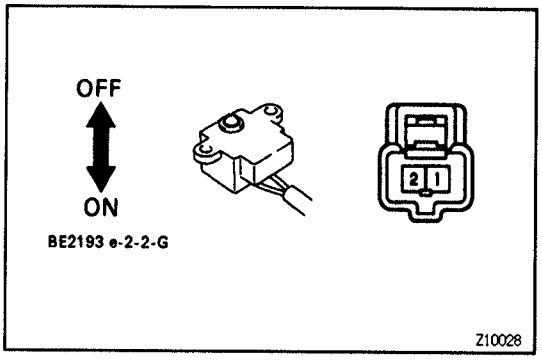

KEY UNLOCK WARNING SWITCH INSPECTION

BE2DJ-04

INSPECT SWITCH CONTINUITY

Condition	Tester connection	Specified condition
Switch OFF (Key removed)	–	No continuity
Switch ON (Key set)	1 – 2	Continuity

If continuity is not as specified, replace the switch.

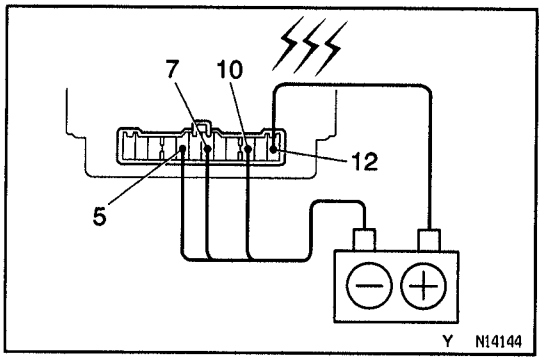

INTEGRATION RELAY INSPECTION

BE2DK-04

1. INSPECT KEY UNLOCK WARNING OPERATION

(a) Connect the positive (+) lead from the battery to terminal 12.

(b) Connect the negative (–) lead from the battery to terminals 5, 7 and 10.

(c) Check the chime sounds.

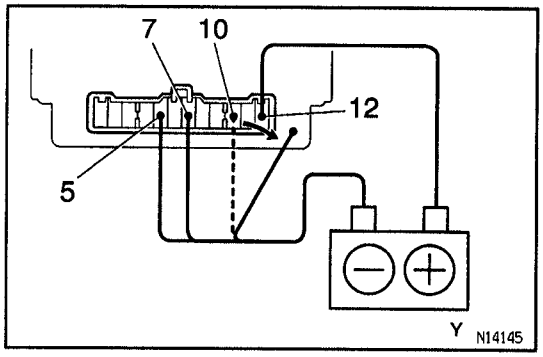

(d) Disconnect the negative (–) lead from the battery to terminal 10.

(e) Check that the chime stops sounding.

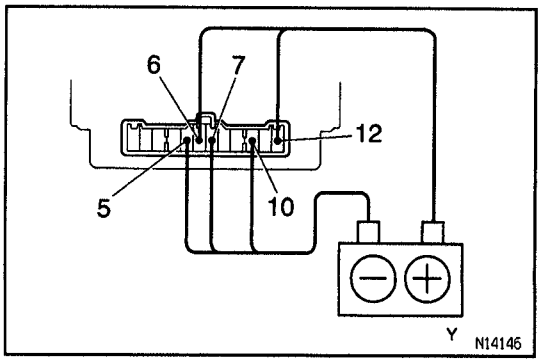

(f) Connect the negative (–) lead from the battery to terminal 10.

(g) Connect the positive (+) lead from the battery to terminal 6.

(h) Check that the chime stops sounding.

If operation is not as specified, replace the relay.

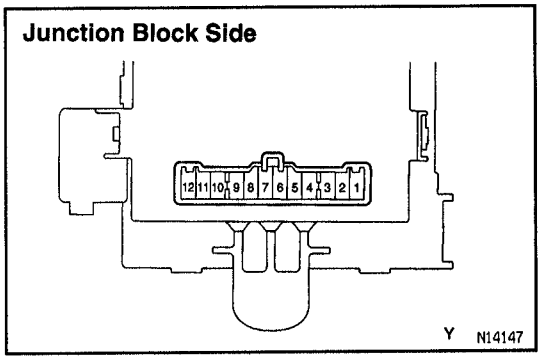

2. INSPECT RELAY CIRCUIT

Remove the relay from the junction block No.1 and inspect the connectors on the junction block side.

Tester connection	Condition	Specified condition
7 — Ground	Constant	Continuity
9 — Ground	Passenger's door courtesy switch OFF (Door opened and Room light switch not in "DOOR")	No continuity
9 — Ground	Passenger's door courtesy switch ON (Door closed and Room light switch not in "DOOR")	No continuity
11 — Ground	Constant	Continuity
12 — Ground	Passenger's door courtesy switch OFF (Door opened and Room light switch not in "DOOR")	No continuity
12 — Ground	Passenger's door courtesy switch ON (Door closed and Room light switch not in "DOOR")	No continuity
4 — Ground	Light control switch OFF	No voltage
4 — Ground	Light control switch TAIL or HEAD	Battery positive voltage
6 — Ground	Ignition switch LOCK or ACC	No voltage
6 — Ground	Ignition switch ON	Battery positive voltage
8 — Ground	Ignition switch LOCK	No voltage
8 — Ground	Ignition switch ACC or ON	Battery positive voltage

If circuit is as specified, try replacing the relay with a new one.
If circuit is not as specified, inspect the circuits connected to other parts.

HEADLIGHT AND TAILLIGHT SYSTEM

PARTS LOCATION

BE00H-0C

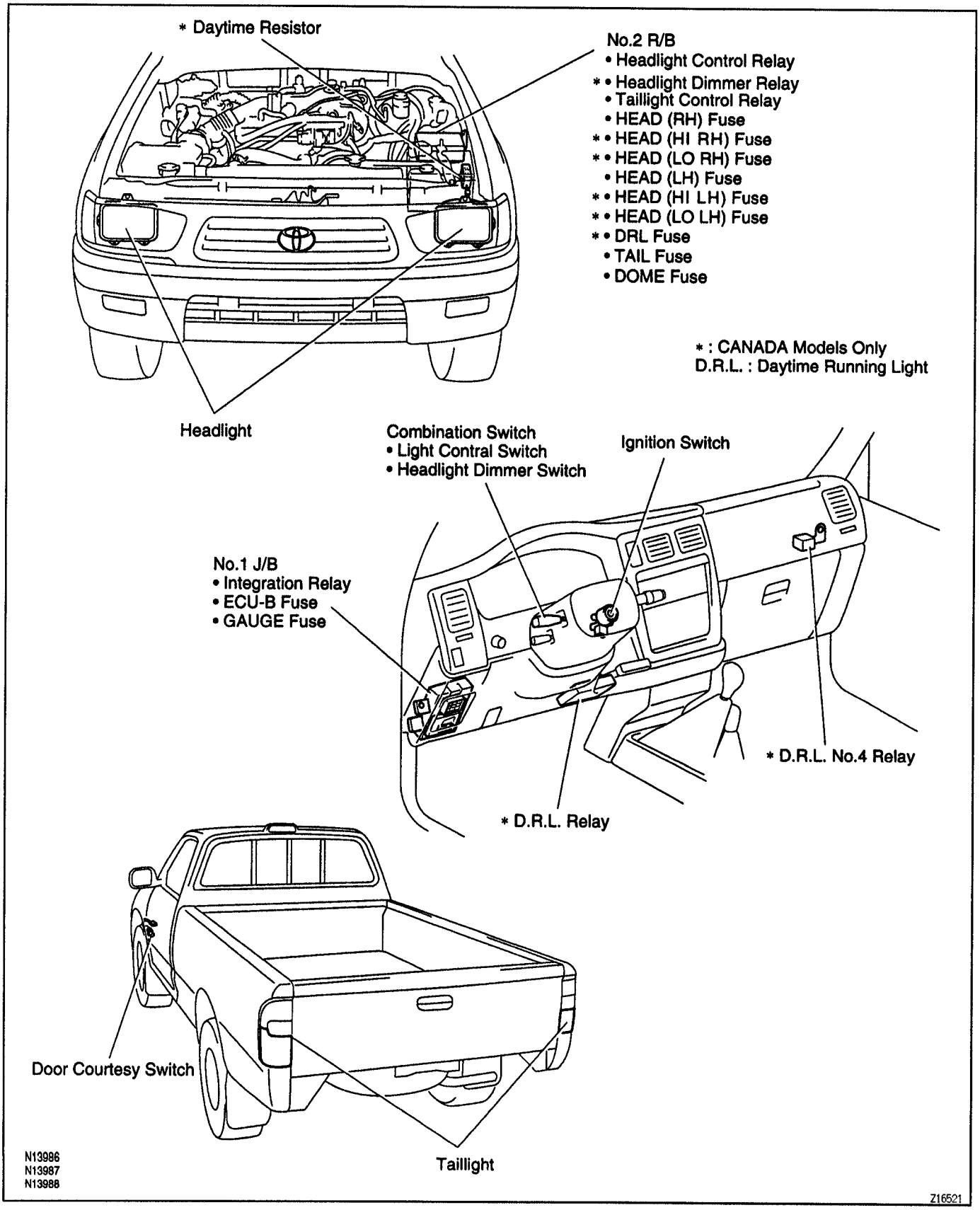

BE

BE00J-0D

TROUBLESHOOTING

The table below will be useful for you in troubleshooting these electrical problems. The most likely causes of the malfunction are shown in the order of their probability. Inspect each part in the order shown, and replace the part when it is found to be faulty.

USA:

Trouble	Parts name	(See page)
Headlight does not light up (Taillight is normal)	1. HEAD LH Fuse (No.2 R/B) 2. HEAD RH Fuse (No.2 R/B) 3. Light Control Switch 4. Headlight Dimmer Switch 5. Headlight Bulb	 (BE–12) (BE–12)
Headlight does not light up (Taillight does not light up)	1. Light Control Switch 2. Headlight Dimmer Switch 3. Headlight Bulb 4. Wire Harness	(BE–12) (BE–12)
Only one light comes on	1. HEAD LH Fuse (No.2 R/B) 2. HEAD RH Fuse (No.2 R/B) 3. Headlight Bulb 4. Wire Harness	
"Lo–Beam" does not light up	1. Headlight Control Relay (No.2 R/B) 2. Headlight Dimmer Relay (No.2 R/B) 3. Headlight Dimmer Switch 4. Headlight Bulb 5. Wire Harness	 (BE–12)
"Hi–Beam" does not light up	1. Headlight Control Relay (No.2 R/B) 2. Headlight Dimmer Relay (No.2 R/B) 3. Headlight Dimmer Switch 4. Headlight Bulb 5. Wire Harness	 (BE–12)
"Flash" does not light up	1. Headlight Control Relay (No.2 R/B) 2. Headlight Dimmer Relay (No.2 R/B) 3. Headlight Dimmer Switch 4. Headlight Bulb 5. Wire Harness	 (BE–12)
Taillight does not light up (Headlight does not light up)	1. TAIL Fuse (No.2 R/B) 2. Light Control Switch 3. Taillight Bulb 4. Wire Harness	 (BE–12)
Taillight does not light up (Headlight is normal)	1. TAIL Fuse (No.2 R/B) 2. Light Control Switch 3. Taillight Control Relay (No.2 R/B) 4. Taillight Bulb 5. Wire Harness	 (BE–12)
Only one light goes out or does not light up	1. Taillight Bulb 2. Wire Harness	
Rear Combination light does not light up	1. TAIL Fuse (No.2 R/B) 2. Taillight Bulb 3. Wire Harness	

CANADA:

Trouble	Parts name	(See page)
Only one side headlight does not light up.	1. Headlight Bulb 2. Wire Harness	
"Lo–Beam" does not light up. (ALL)	1. D.R.L. Relay 2. Headlight Dimmer Relay (No.2 R/B) 3. Headlight Control Relay (No.2 R/B) 4. Headlight Dimmer Switch 5. Wire Harness	(BE–13) (BE–12)
"Lo–Beam" does not light up. (ONE SIDE)	1. HEAD (LO LH) Fuse (No.2 R/B) 2. HEAD (LO RH) Fuse (No.2 R/B) 3. Headlight Bulb 4. Wire Harness	
"Hi–Beam" does not light up. (ALL)	1. DRL Fuse (No.2 R/B) 2. Headlight Dimmer Relay (No.2 R/B) 3. Headlight Control Relay (No.2 R/B) 4. Headlight Dimmer Switch 5. Wire Harness	 (BE–12)
"Hi–Beam" does not light up. (ONE SIDE)	1. HEAD (HI LH) Fuse (No.2 R/B) 2. HEAD (HI RH) Fuse (No.2 R/B) 3. Headlight Bulb 4. Wire Harness	
"Flash" does not light up.	1. Headlight Dimmer Switch 2. Wire Harness	(BE–12)
Headlight does not light up. (Taillight is normal)	1. Headlight Control Relay (No.2 R/B) 2. D.R.L. Relay 3. D.R.L. No.4 Relay 4. D.R.L. Resistor 5. Headlight Dimmer Switch 6. Light Control Switch 7. Headlight Bulb 8. Wire Harness	 (BE–13) (BE–14) (BE–14) (BE–12) (BE–12)
Headlight does not light up. (Taillight does not light up)	1. Headlight Control Relay (No.2 R/B) 2. D.R.L. Relay 3. D.R.L. No.4 Relay 4. D.R.L. Resistor 5. Headlight Dimmer Switch 6. Light Control Switch 7. Headlight Bulb 8. Wire Harness	 (BE–13) (BE–14) (BE–14) (BE–12) (BE–12)
Only one side taillight does not light up.	1. Taillight Bulb 2. Wire Harness	
Taillight does not light up. (Headlight is normal)	1. TAIL Fuse (No.2 R/B) 2. Taillight Control Relay (No.2 R/B) 3. Light Control Switch 4. Taillight Bulb 5. Wire Harness	 (BE–12)

Trouble	Parts name	(See page)
Taillight does not light up. (Headlight does not light up)	1. Light Control Switch	(BE–12)
	2. Taillight Bulb	
	3. Wire Harness	
Headlight does not light up with light control SW in HEAD.	1. Light Control Switch	(BE–12)
	2. D.R.L. Relay	(BE–13)
	3. D.R.L. No.4 Relay	(BE–14)
	4. Wire Harness	
Headlight does not go out with light control SW in OFF.	1. Headlight Control Relay (No.2 R/B)	
	2. Light Control Switch	(BE–12)
	3. Wire Harness	
Taillight does not light up with light control SW in TAIL.	1. Taillight Control Relay (No.2 R/B)	
	2. Light Control Switch	(BE–12)
	3. Wire Harness	
Taillight does not go out with light control SW in OFF.	1. Taillight Control Relay (No.2 R/B)	
	2. Light Control Switch	(BE–12)
	3. Wire Harness	
Headlight do not light up with engine running, parking brake SW and light control SW in OFF.	1. ECU–B Fuse (No.1 J/B)	
	2. GAUGE Fuse (No.1 J/B)	
	3. DRL Fuse (No.2 R/B)	
	4. D.R.L. Relay	(BE–13)
	5. D.R.L. No.4 Relay	(BE–14)
	6. D.R.L. Resistor	(BE–14)
	7. Wire Harness	
	8. Generator L Terminal	
	9. Parking Brake Switch	(BE–40)
	10. Brake Fluid Level Warning Switch	(BE–40)
	11. Wire Harness	

LIGHT–ON WARNING SYSTEM

Trouble	Parts name	(See page)
"Light–on warning system" does not operate.	1. Integration Relay (No.1 J/B)	
	2. DOME Fuse (No.2 R/B)	
	3. GAUGE Fuse (No.1 J/B)	
	4. Door Courtesy Switch	(BE–20)
	5. Wire Harness	

HEADLIGHT AIMING ADJUSTMENT

BE00K-08

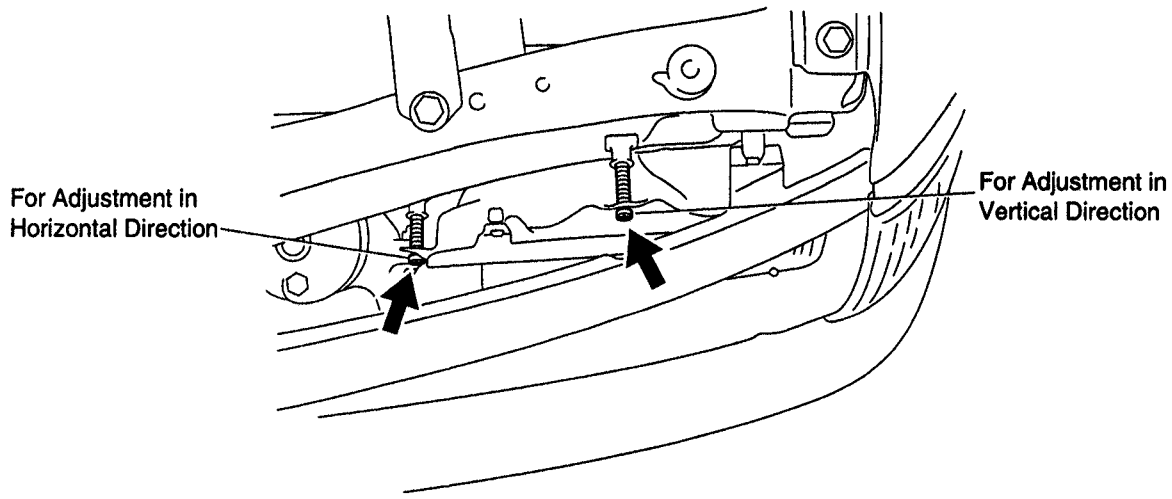

Y N13908

COMBINATION SWITCH DISASSEMBLY

BE2L0-02

See page SR–13.

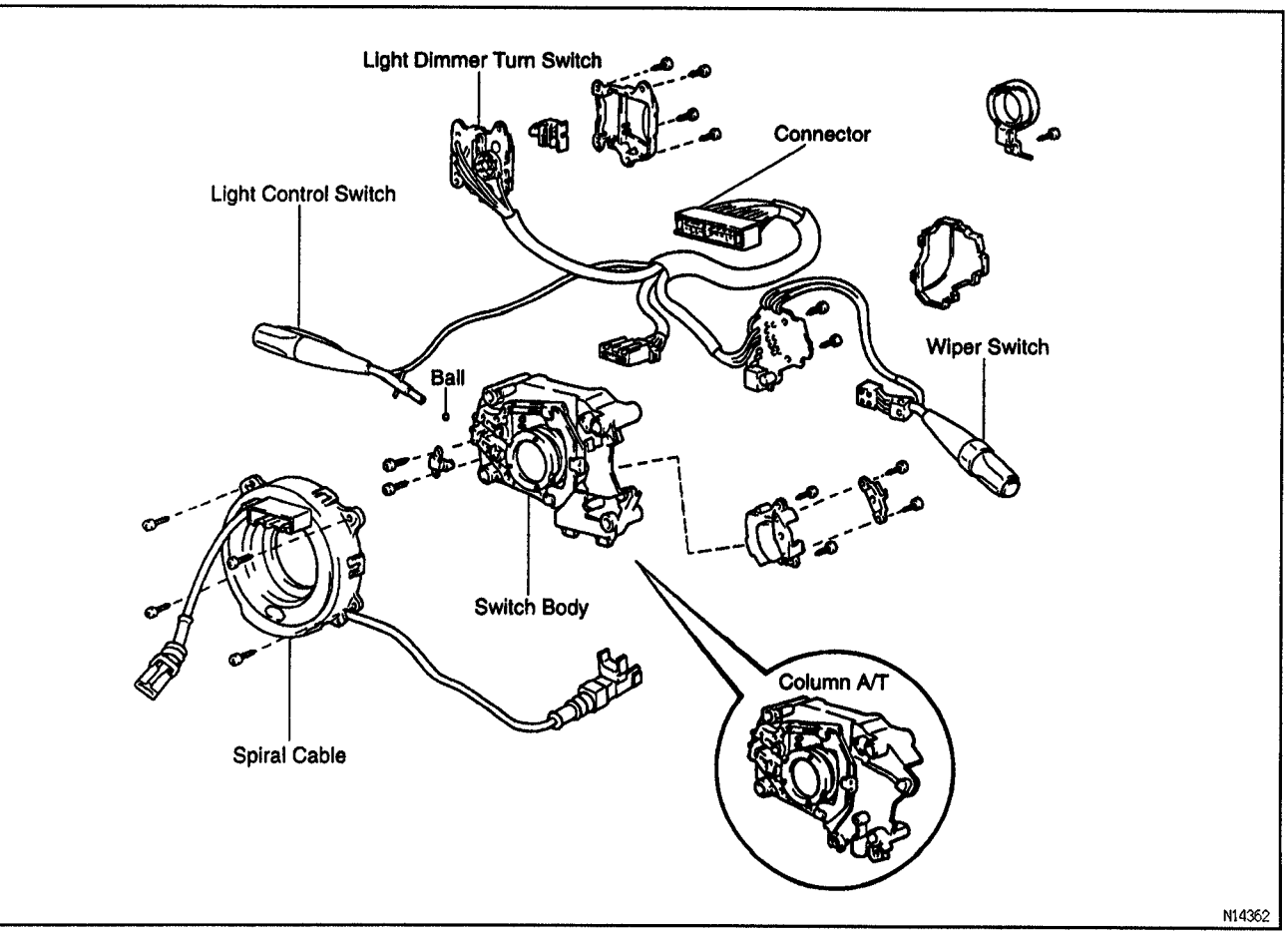

N14362

BE

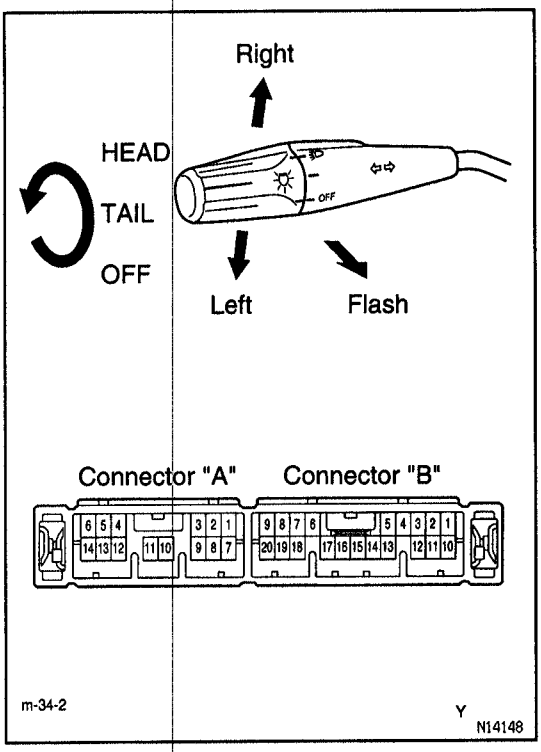

COMBINATION SWITCH INSPECTION

BE00M-06

1. INSPECT LIGHT CONTROL SWITCH CONTINUITY

Switch position	Tester connection	Specified condition
OFF	–	No continuity
TAIL	A2 – A11	Continuity
HEAD	A2 – A11 – A13	Continuity

If continuity is not as specified, replace the switch.

2. INSPECT HEADLIGHT DIMMER SWITCH CONTINUITY

Switch position	Tester connection	Specified condition
Low beam	A3 – A9	Continuity
High beam	A9 – A12	Continuity
Flash	A9 – A12 – A14	Continuity

If continuity is not as specified, replace the switch.

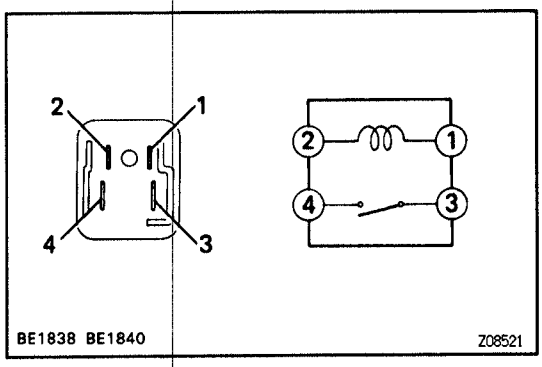

HEADLIGHT CONTROL RELAY INSPECTION

BE00N-06

INSPECT RELAY CONTINUITY

Condition	Tester connection	Specified condition
Constant	1 – 2	Continuity
Apply B+ between terminals 1 and 2.	3 – 4	Continuity

If continuity is not as specified, replace the relay.

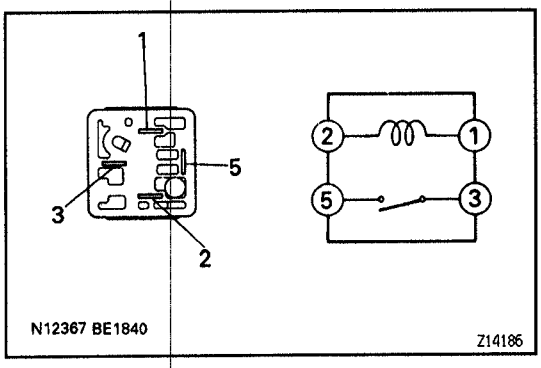

TAILLIGHT CONTROL RELAY INSPECTION

BE00P-06

INSPECT RELAY CONTINUITY

Condition	Tester connection	Specified condition
Constant	1 – 2	Continuity
Apply B+ between terminals 1 and 2.	3 – 5	Continuity

If continuity is not as specified, replace the relay.

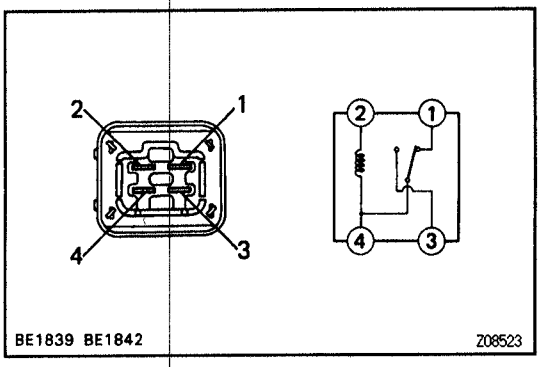

HEADLIGHT DIMMER RELAY INSPECTION

BE00Q-06

INSPECT RELAY CONTINUITY

Condition	Tester connection	Specified condition
Constant	1 – 4, 2 – 4	Continuity
Apply B+ between terminals 2 and 4.	3 – 4	Continuity

If continuity is not as specified, replace the relay.

BE

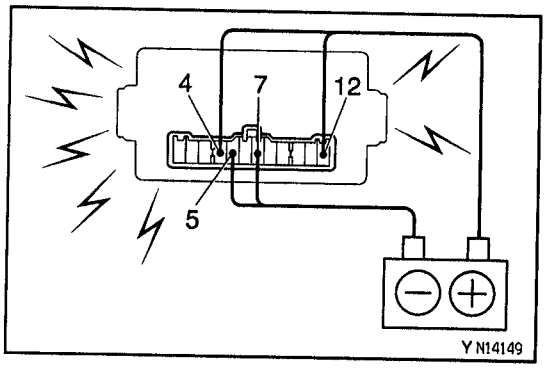

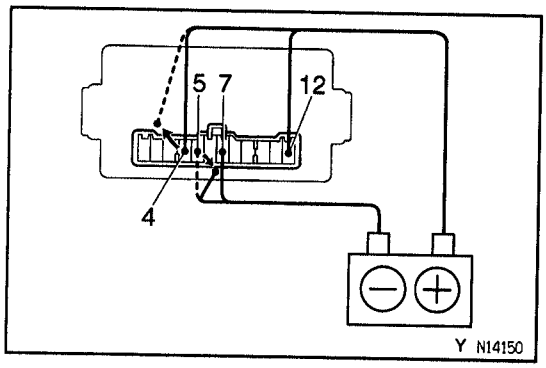

LIGHT–ON WARNING SYSTEM INSPECTION

BE0OR–06

1. **INSPECT DOOR COURTESY SWITCH**
   See page BE–20.
2. **INSPECT INTEGRATION RELAY OPERATION**

(a) Connect the positive (+) lead from the battery to terminal 12 and the negative (–) lead to terminal 7.

(b) Connect the positive (+) lead from the battery to terminal 4 and the negative (–) lead to terminal 5.

(c) Check that the buzzer does not sound when terminal 4 or 5 is connected to the positive (+) lead.

(d) Check that the buzzer does not sound when disconnecting terminal 4 or 5.

If operation is not as specified, replace the relay.

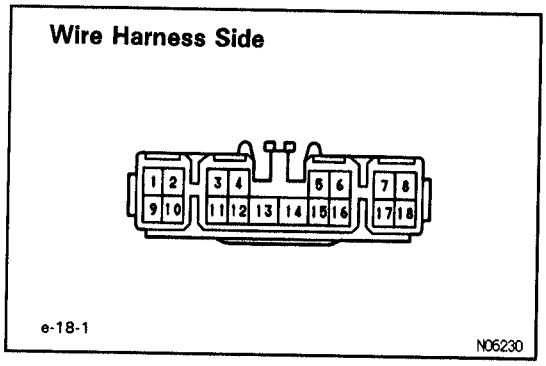

DAYTIME RUNNING LIGHT RELAY INSPECTION

BE2LA–02

INSPECT RELAY CIRCUIT

Connector Disconnected

Disconnect the connector from the relay and inspect the connector on the wire harness side, as shown in the chart.

Tester connection	Condition	Specified condition
5 – Ground	Light control switch position OFF or TAIL	No continuity
5 – Ground	Light control switch position HEAD	Continuity
7 – Ground	Headlight dimmer switch position Low beam and High	No continuity
7 – Ground	Headlight dimmer switch position Flash	Continuity
16 – Ground	Headlight dimmer switch position Low beam	No continuity
16 – Ground	Headlight dimmer switch position High beam or Flash	Continuity
8 – Ground	Parking brake switch position OFF (Parking brake lever released)	No continuity
8 – Ground	Paring brake switch position ON (Parking brake lever pulled up)	Continuity
12 – Ground	Constant	Continuity
13 – Ground	Constant	Continuity
17 – Ground	Constant	Continuity

Tester connection	Condition	Specified condition
18 – Ground	Brake fluid level warning position OFF	No continuity
18 – Ground	Brake fluid level warning position ON	Battery positive voltage
2 – Ground	Ignition switch position LOCK or ACC	No voltage
2 – Ground	Ignition switch position ON or START	Battery positive voltage
6 – Ground	Constant	Battery positive voltage
11 – Ground	Engine Stop	No voltage
11 – Ground	Engine Running	Battery positive voltage
15 – Ground	Constant	Battery positive voltage

If circuit is as specified, perform the inspection on the following page.

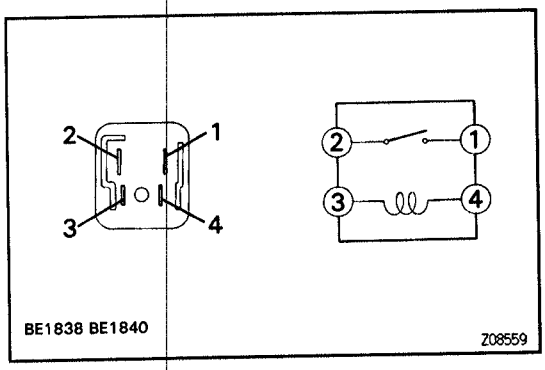

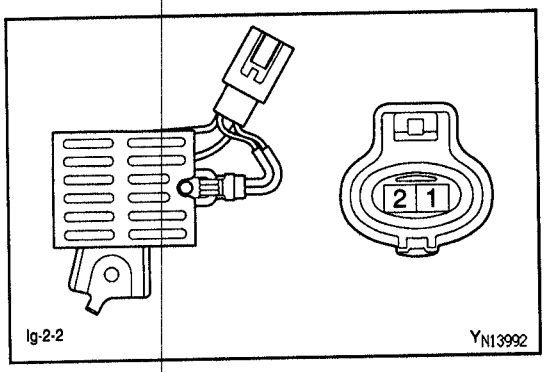

DAYTIME RUNNING LIGHT No.4 RELAY INSPECTION BE1HT-05

INSPECT RELAY CONTINUITY

Condition	Tester connection	Specified condition
Constant	3 – 4	Continuity
Apply B+ between terminals 3 and 4.	1 – 2	Continuity

If continuity is not as specified, replace the relay.

DAYTIME RESISTOR RESISTANCE BE1HU-05

INSPECT RESISTOR CONTINUITY

Condition	Tester connection	Specified condition
Constant	1 – 2	Approx. 337mΩ

If continuity is not as specified, replace the resistor.

BE

TURN SIGNAL AND HAZARD WARNING SYSTEM

PARTS LOCATION

BE00T–08

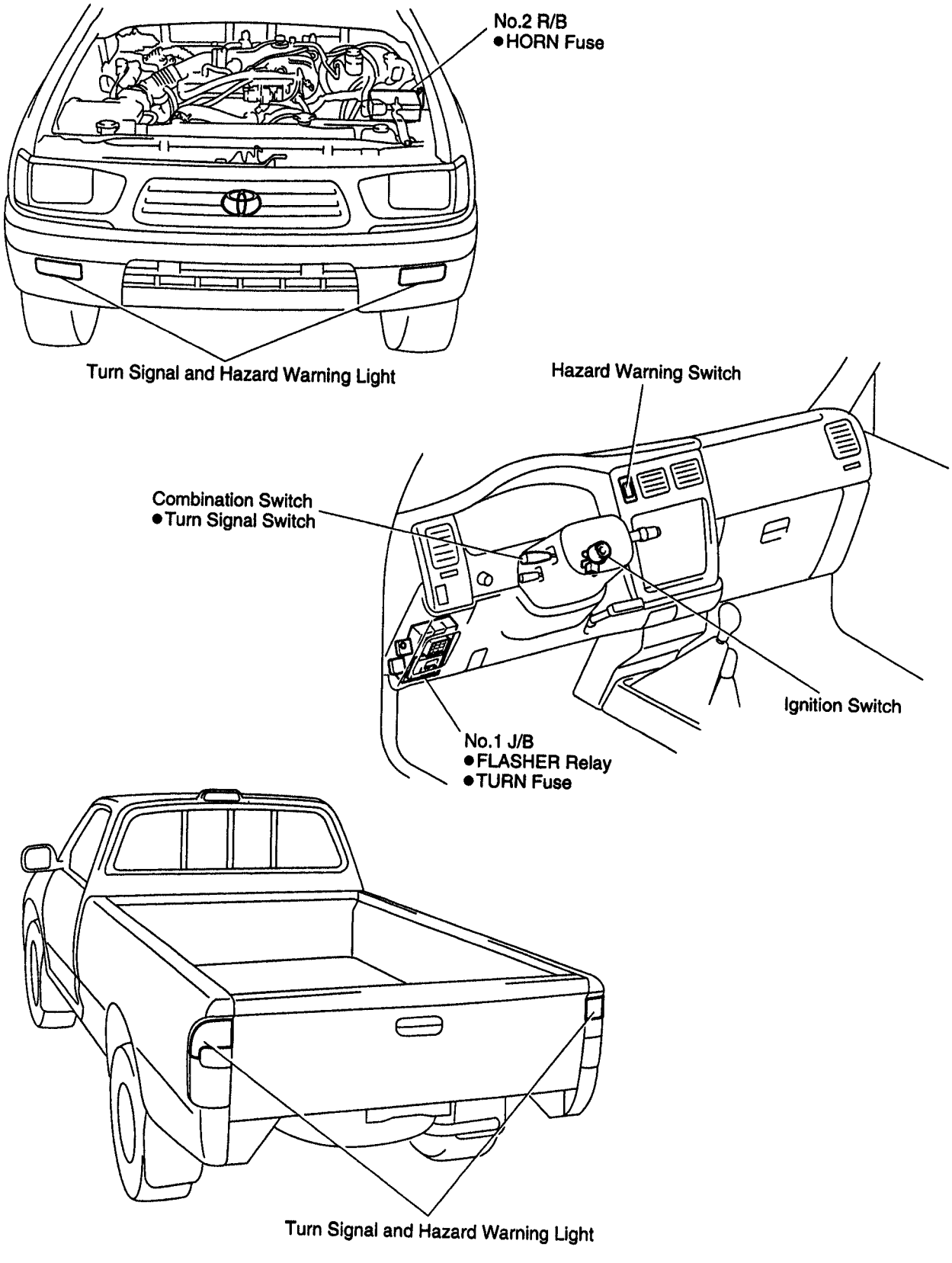

N13989
N13990
N13991

Z16522

BE00U–0D

TROUBLESHOOTING

The table below will be useful for you in troubleshooting these electrical problems. The most likely causes of the malfunction are shown in the order of their probability. Inspect each part in the order shown, and replace the part when it is found to be faulty.

Trouble	Parts name	(See page)
"Hazard" and "Turn" do not light up	1. Hazard Warning Switch 2. Turn Signal Flasher 3. Wire Harness	(BE–17) (BE–17)
The flashing frequency is abnormal	1. Bulb 2. Turn Signal Flasher 3. Wire Harness	(BE–17)
Hazard warning light does not light up (Turn signal is normal)	1. HORN Fuse (No.2 R/B) 2. Wire Harness	
Hazard warning light does not light up in one direction	1. Hazard Warning Switch 2. Wire Harness	(BE–17)
Turn signal does not light up (Combination meter, wiper and washer do not operate.)	1. Ignition Switch 2. TURN Fuse (No.1 J/B) 3. Turn Signal Switch 4. Wire Harness	(BE–4) (BE–16)
Turn signal does not light up (Combination meter, wiper and washer are normal.)	1. Turn Fuse (No.1 J/B) 2. Turn Signal Switch 3. Wire Harness	(BE–16)
Turn signal does not light up in one direction	1. Turn Signal Switch 2. Wire Harness	(BE–16)
Only one bulb does not light up	1. Bulb 2. Wire Harness	

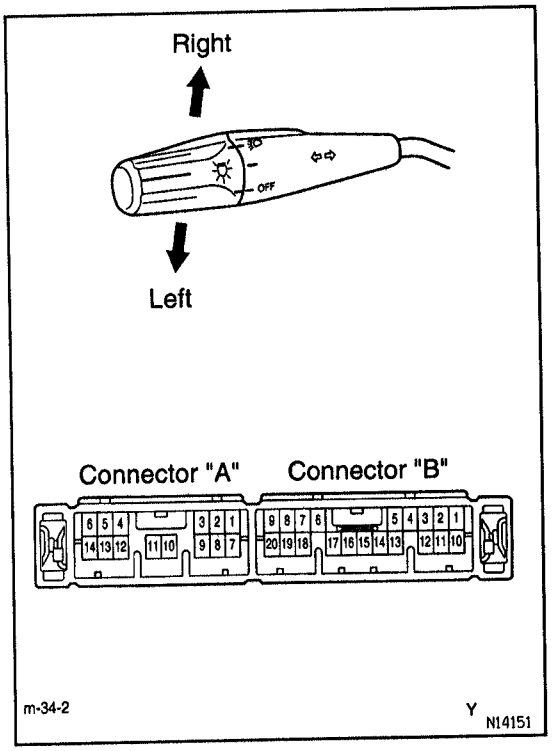

BE00V–07

TURN SIGNAL SWITCH INSPECTION

INSPECT SWITCH CONTINUITY

Switch position	Tester connection	Specified condition
Left turn	A1 – A5	Continuity
Neutral	–	No continuity
Right turn	A1 – A8	Continuity

If continuity is not as specified, replace the switch.

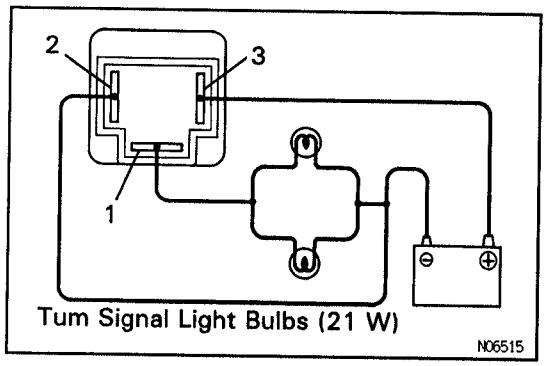

TURN SIGNAL FLASHER INSPECTION BE00W-0C

INSPECT FLASHER OPERATION

(a) Connect the positive (+) lead from the battery to terminal 2 and the negative (−) lead to terminal 3.

(b) Connect the 2 turn signal light bulbs parallel to each other to terminals 1 and 3, check that the bulbs flash.
HINT: The turn signal lights should flash 60 or 120 times per minute.
If one of the front or rear turn signal lights has an open circuit, the number of flashers will be more than 140 per minute.
If operation is not as specified, replace the flasher.

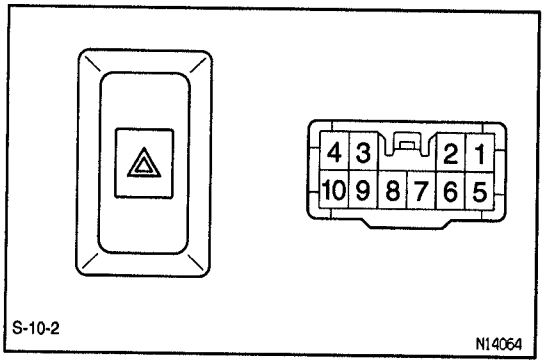

HAZARD WARNING SWITCH INSPECTION BE00A-0D

INSPECT SWITCH CONTINUITY

Switch position	Tester connection	Specified condition
Switch OFF	7 – 10	Continuity
Switch ON	4 – 5 – 6 – 9 7 – 8	Continuity
Illumination circuit	2 – 3	Continuity

If continuity is not as specified, replace the switch.

BE

INTERIOR LIGHT SYSTEM

BE00Y-08

PARTS LOCATION

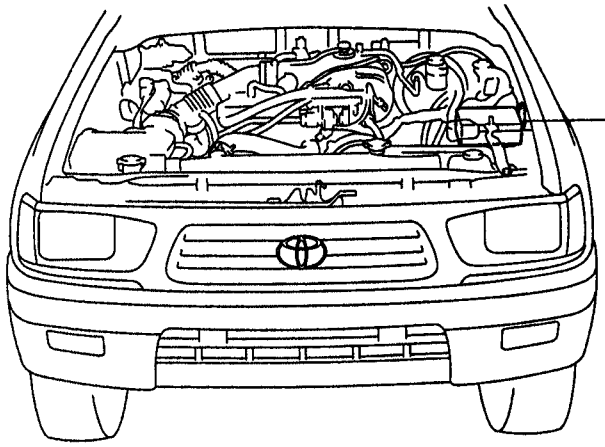

No.2 R/B
● DOME Fuse

Room Light

REGULAR CAB:

No.1 J/B
● Integration Relay

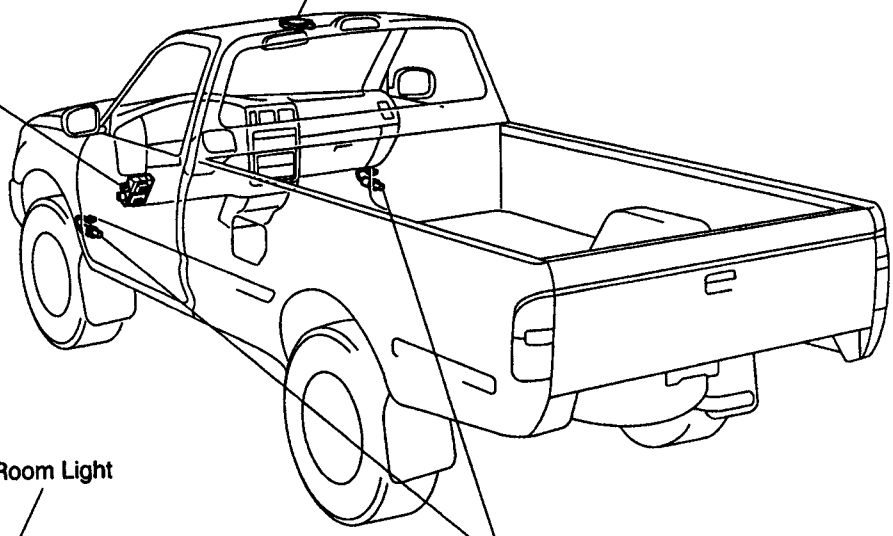

EXTRA CAB:

Room Light

No.1 J/B
● Integration Relay

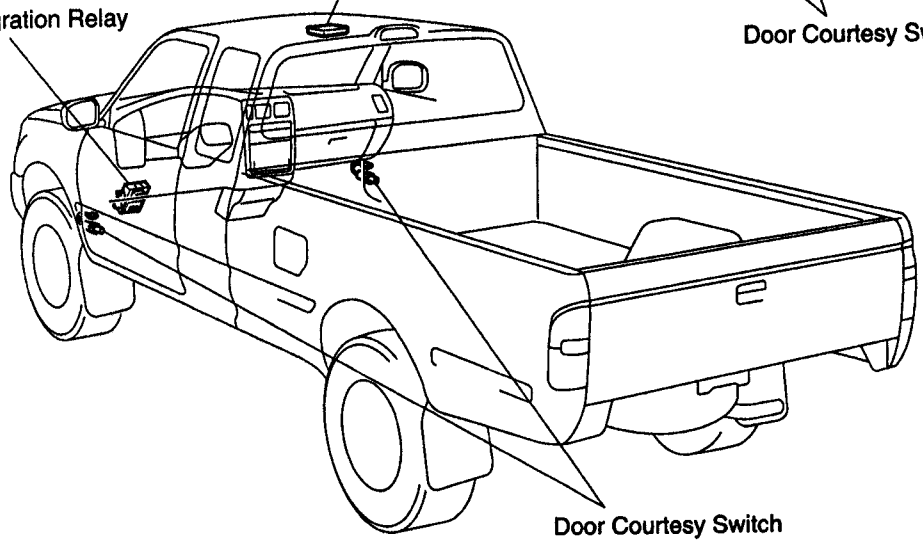

Door Courtesy Switch

Door Courtesy Switch

N13999
N14021
N14022

Z16523

BE

TROUBLESHOOTING

BE00Z-0E

The table below will be useful for you in troubleshooting these electrical problems. The most likely causes of the malfunction are shown in the order of their probability. Inspect each part in the order shown, and replace the part when it is found to be faulty.

Trouble	Parts name	(See page)
Room light does not light up	1. DOME Fuse (No.2 R/B)	
	2. Integration Relay (No.1 J/B)	
	3. Room Light Switch	(BE−19)
	4. Door Courtesy Switch	(BE−20)
	5. Bulb	
	6. Wire Harness	
Room light remains always on	1. Room Light Switch	(BE−19)
	2. Door Courtesy Switch	(BE−20)
	3. Wire Harness	

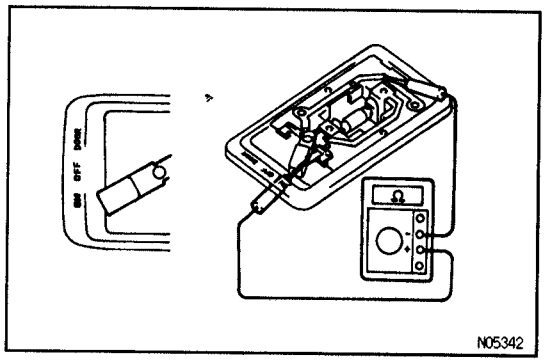

N05342

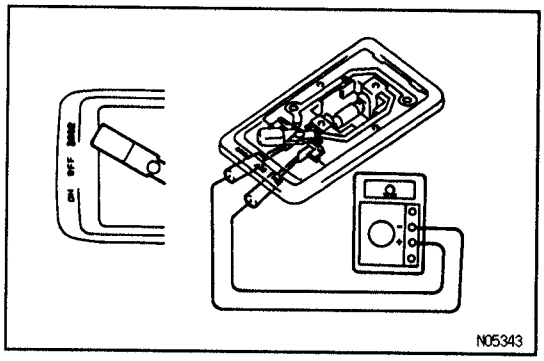

N05343

ROOM LIGHT SWITCH INSPECTION

BE010-05

INSPECT SWITCH CONTINUITY

(a) Disconnect the connector from room light switch.

(b) Turn the room light switch ON, check that the there is continuity between terminal 2 and body ground.

(c) Turn the room light switch to DOOR, check that there is continuity between terminals 1 and 2.
If operation is not as specified, replace the switch.

BE

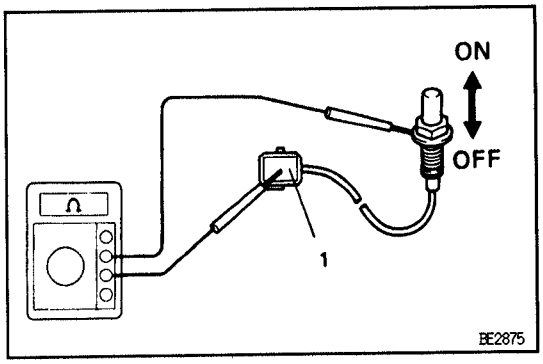

DOOR COURTESY SWITCH INSPECTION

BE011–08

INSPECT SWITCH CONTINUITY

(a) Check that there is no continuity between terminal and the switch body in the ON position (switch pin released : opened door).

(b) Check that there is continuity between terminal and the switch body in the OFF position (switch pin pushed in : closed door).

If operation is not as specified, replace the switch.

BACK–UP LIGHT SYSTEM

BE2LB–02

PARTS LOCATION

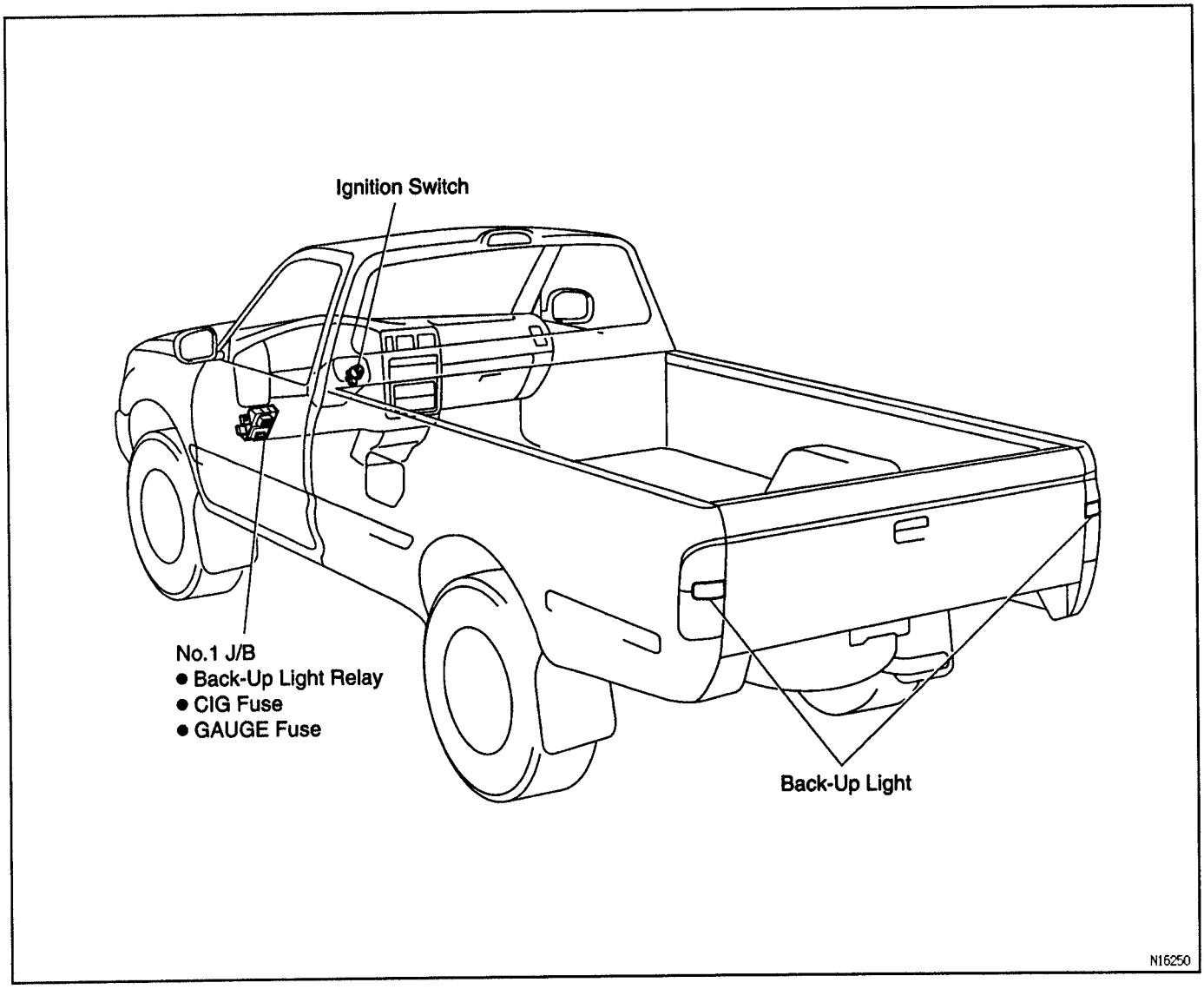

RZN Series

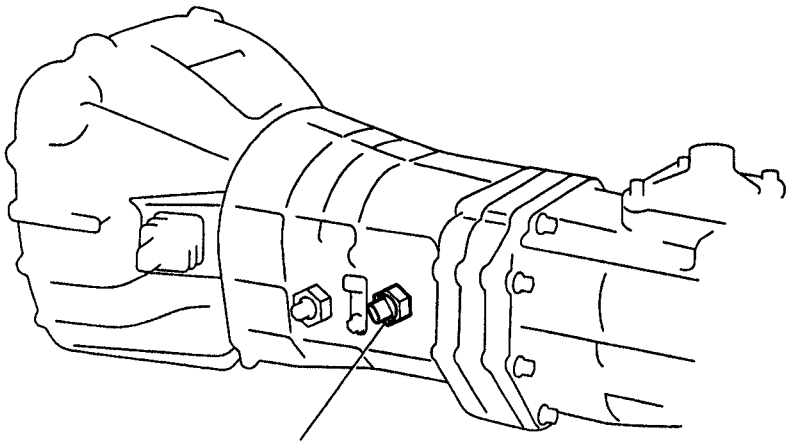

Back-Up Light Switch (M/T Vehicle)

VZN Series

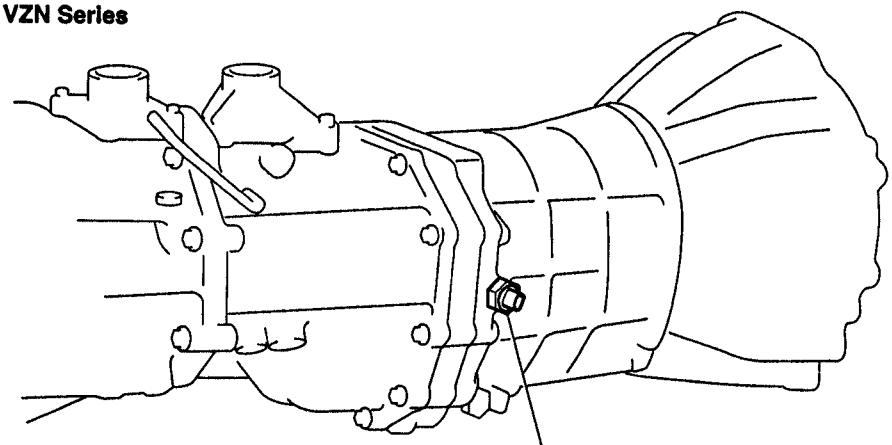

Back-Up Light Switch (M/T Vehicle)

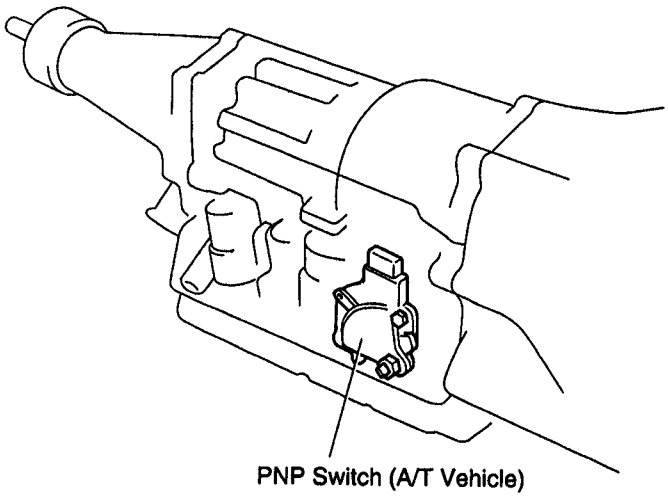

PNP Switch (A/T Vehicle)

N13996
N13997
N13998

Y Z15350

BE013-0Q

TROUBLESHOOTING

The table below will be useful for you in troubleshooting these electrical problems. The most likely causes of the malfunction are shown in the order of their probability. Inspect each part in the order shown, and replace the part when it is found to be faulty.

Trouble	Parts name	(See page)
Back–Up Light does not light up	1. CIG Fuse (No.1 J/B)	
	2. GAUGE Fuse (No.1 J/B)	
	3. Ignition Switch	(BE–4)
	4. Column A/T: Back–Up Light Relay	(BE–22)
	5. Back–Up Light Switch (M/T)	(BE–22)
	6. PNP Switch (A/T)	(BE–22)
	7. Bulb	
	8. Wire Harness	
Back–Up Light remains always on	1. Wire Harness	
Only one light does not light up	1. Bulb	
	2. Wire Harness	

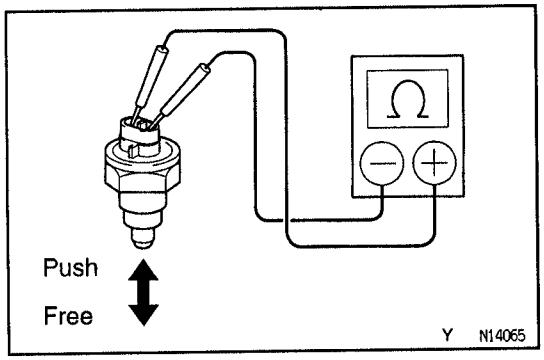

BACK–UP LIGHT SWITCH INSPECTION

BE014-0M

INSPECT SWITCH CONTINUITY

Condition	Tester connection	Specified condition
Free	–	No continuity
Push	1 – 2	Continuity

If continuity is not as specified, replace the switch.

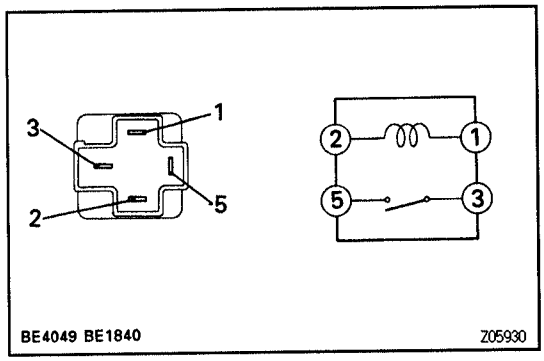

BACK–UP LIGHT RELAY INSPECTION

BE1CW-0C

INSPECT RELAY CONTINUITY

Condition	Tester connection	Specified condition
Constant	1 – 2	Continuity
Apply B+ between terminals 1 and 2.	3 – 5	Continuity

If continuity is not as specified, replace the relay.

PARK/NEUTRAL POSITION SWITCH INSPECTION

BE2TC-01

INSPECT SWITCH CONTINUITY

A43D: See page AT–12.
A340E, A340F: See page AT–76.

STOP LIGHT SYSTEM

PARTS LOCATION

BE015-OH

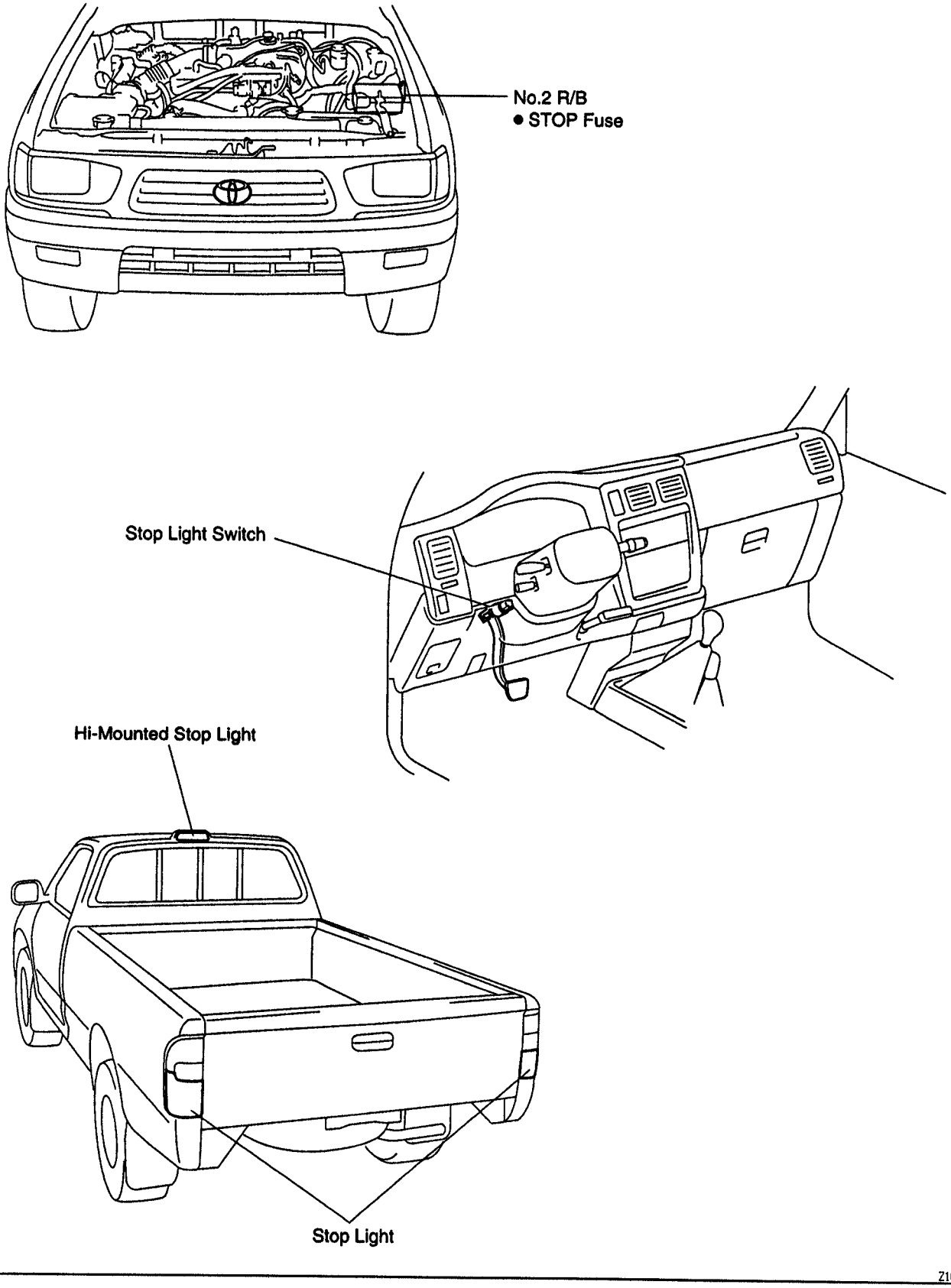

BE018-0Q

TROUBLESHOOTING

The table below will be useful for you in troubleshooting these electrical problems. The most likely causes of the malfunction are shown in the order of their probability. Inspect each part in the order shown, and replace the part when it is found to be faulty.

Trouble	Parts name	(See page)
Stop light does not light up	1. STOP Fuse (No.2 R/B) 2. Stop Light Switch 3. Bulb 4. Wire Harness	(BE–24)
Stop light remains always on	1. Stop Light Switch 2. Wire Harness	(BE–24)
Only one light does not light up	1. Wire Harness 2. Bulb	

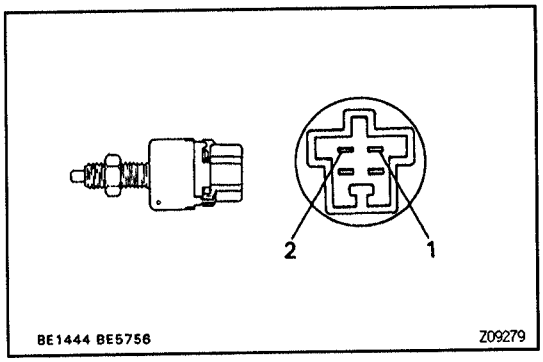

BE1444 BE5756 Z09279

BE017-06

STOP LIGHT SWITCH INSPECTION

INSPECT SWITCH CONTINUITY
w/o Cruise Control:

Switch position	Tester connection	Specified condition
Switch pin free (Brake pedal depressed)	1 – 2	Continuity
Switch pin pushed in (Brake pedal released)	–	No continuity

If continuity is not as specified, replace the switch.

BE

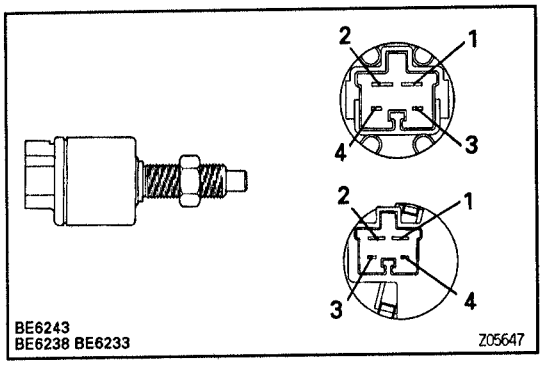

BE6243
BE6238 BE6233 Z05647

w/ Cruise Control:

Switch position	Tester connection	Specified condition
Switch pin free (Brake pedal depressed)	1 – 2	Continuity
Switch pin pushed in (Brake pedal released)	–	No continuity

If continuity is not as specified, replace the switch.

WIPER AND WASHER SYSTEM

PARTS LOCATION

BE018-0E

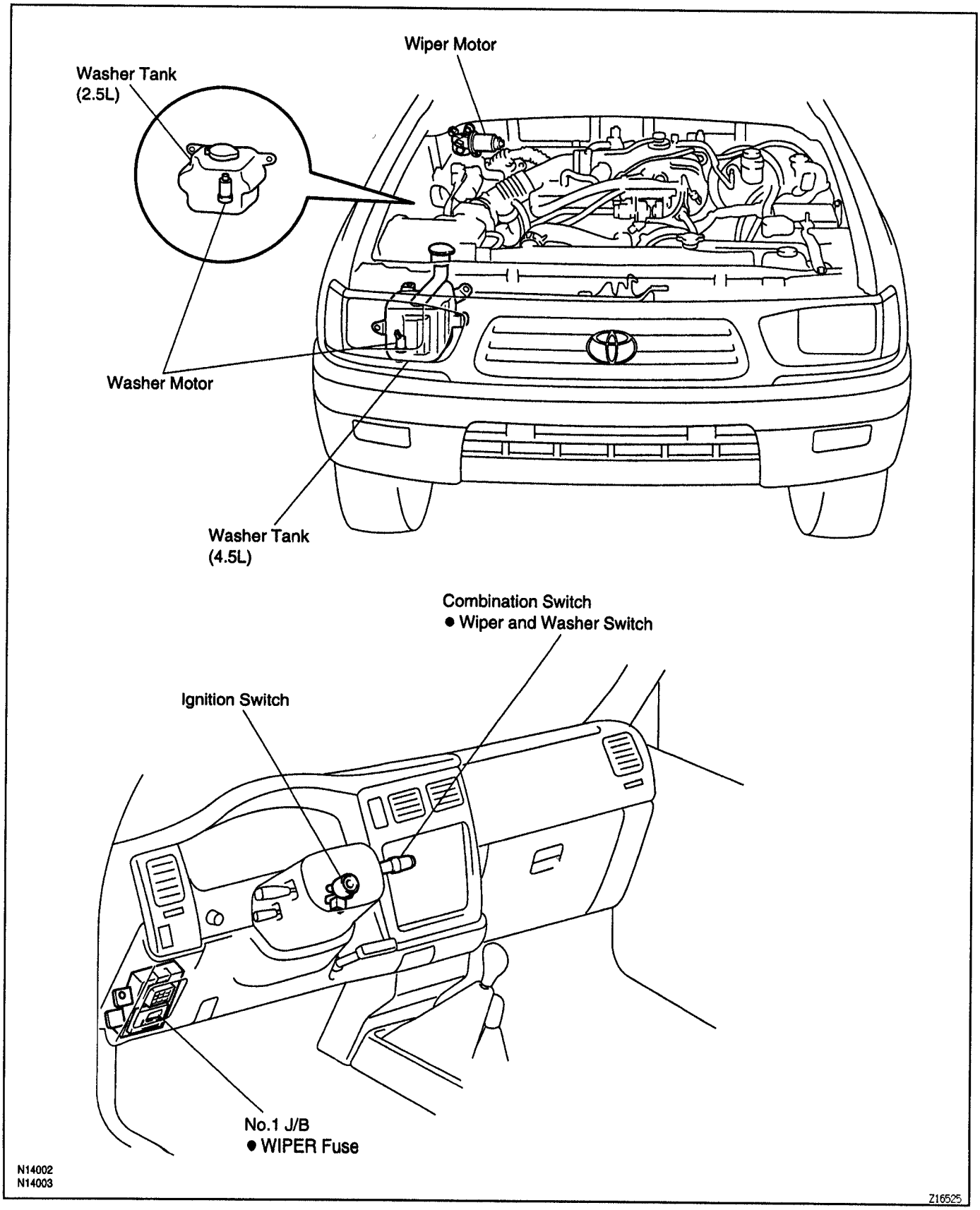

BE

BE010-0A

TROUBLESHOOTING

The table below will be useful for you in troubleshooting these electrical problems. The most likely causes of the malfunction are shown in the order of their probability. Inspect each part in the order shown, and replace the part when it is found to be faulty.

Trouble	Parts name	(See page)
Wiper does not operate or turn to off position	1. WIPER Fuse (No.1 J/B)	
	2. Ignition Switch	(BE–4)
	3. Wiper and Washer Switch	(BE–26)
	4. Wiper Motor	(BE–28)
	5. Wire harness	
Wiper does not operate in INT position	1. Wiper and Washer Switch	(BE–26)
	2. Wiper Motor	(BE–28)
	3. Wire Harness	
Washer does not operate	1. Wiper and Washer Switch	(BE–26)
	2. Washer Hose and Nozzle	
	3. Washer Motor	(BE–28)
	4. Wire Harness	

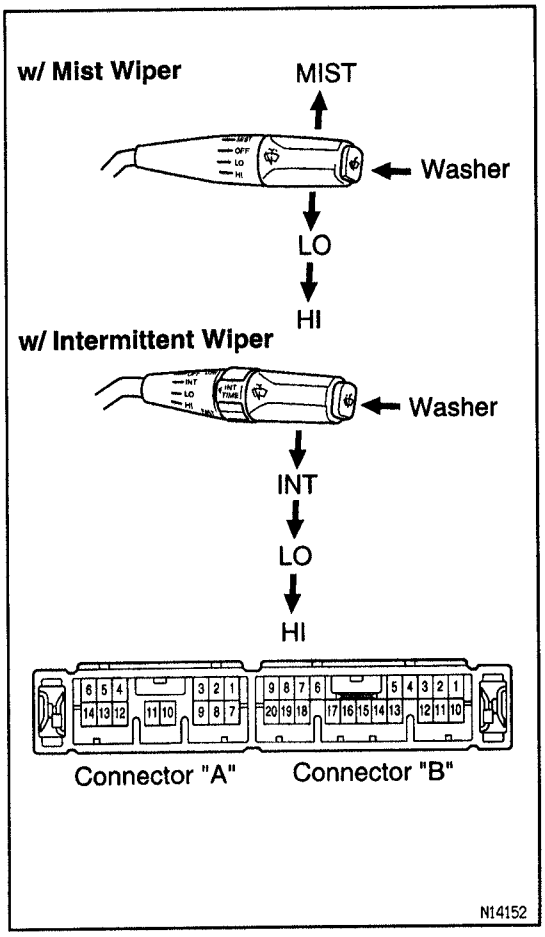

BE2LC-02

COMBINATION SWITCH INSPECTION

1. INSPECT WIPER SWITCH CONTINUITY

w/ Mist Wiper:

Switch position	Tester connection	Specified condition
MIST	B7 – B18	Continuity
OFF	B4 – B7	Continuity
LO	B7 – B18	Continuity
HI	B13 – B18	Continuity

w/ Intermittent Wiper:

Switch position	Tester connection	Specified condition
OFF	B4 – B7	Continuity
INT	B4 – B7	Continuity
LO	B7 – B18	Continuity
HI	B13 – B18	Continuity

2. INSPECT WASHER SWITCH CONTINUITY

Switch position	Tester connection	Specified condition
OFF	–	No continuity
ON	B8 – B16	Continuity

If continuity is not as specified, replace the switch.

BE

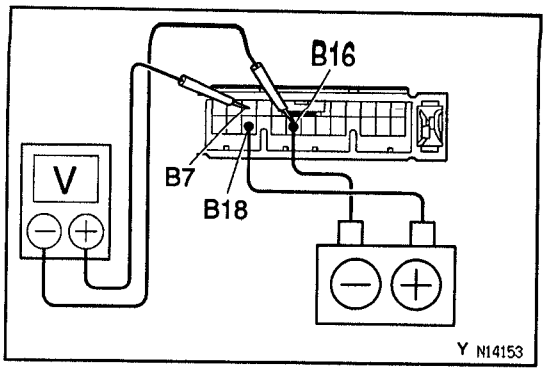

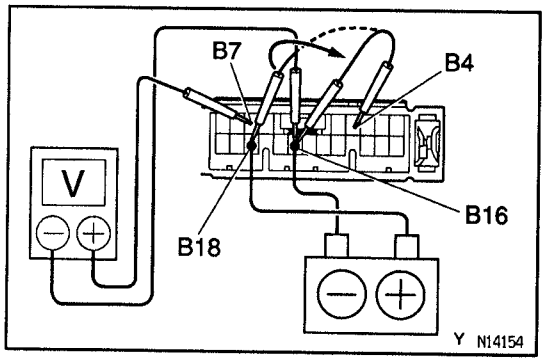

Intermittent Wiper Operation:

(a) Turn the wiper switch to INT position.

(b) Variable Type:
Turn the intermittent time control switch to FAST position.

(c) Connect the positive (+) lead from the battery to terminal B18 and the negative (−) lead to terminal B 16.

(d) Connect the positive (+) lead from the voltmeter to terminal B7 and the negative (−) lead to terminal B16, and check that the meter needle indicates battery positive voltage.

(e) After connecting terminal B4 to terminal B18, connect to terminal B16.
Then, check that the voltage rises from 0 volts to battery positive voltage within the time, as shown in the table.

INT time control switch position	Voltage
FAST	Approx. 1 – 3 sec. Battery positive voltage 0 volt
SLOW	Approx. 10 – 15 sec. Battery positive voltage 0 volt

V03883

If operation is not as specified, replace the wiper and washer switch.

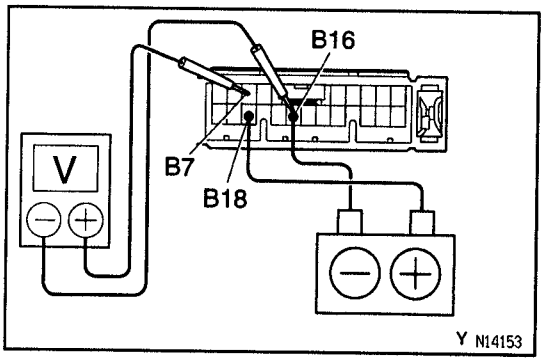

Washer Linked Wiper Operation:

(a) Connect the positive (+) lead from the battery to terminal B18 and the negative (−) lead to terminal B 16.

(b) Connect the positive (+) lead from the voltmeter to terminal B7 and the negative (−) lead to terminal B16.

(c) Push in the washer switch. Check that the voltage changes as shown in the table.

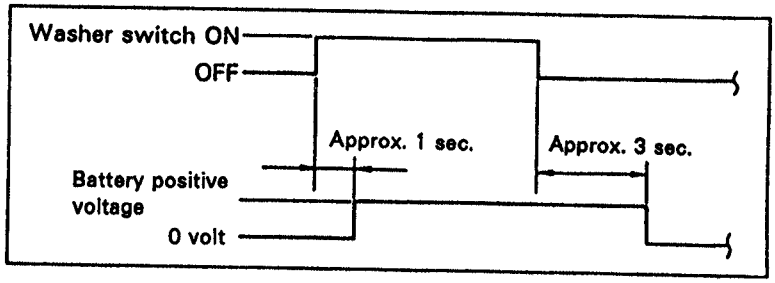

V03884

If operation is not as specified, replace the switch.

BE

BE01B-0D

WIPER MOTOR INSPECTION

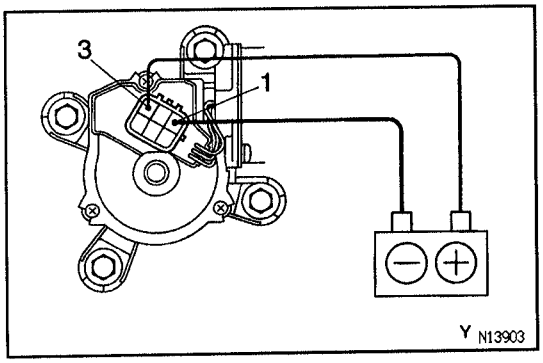

INSPECT MOTOR OPERATION

Low Speed:

Connect the positive (+) lead from the battery to terminal 3 and the negative (−) lead from the battery to the motor body or terminal 1, and check that the motor operates at low speed.

If operation is not as specified, replace the motor.

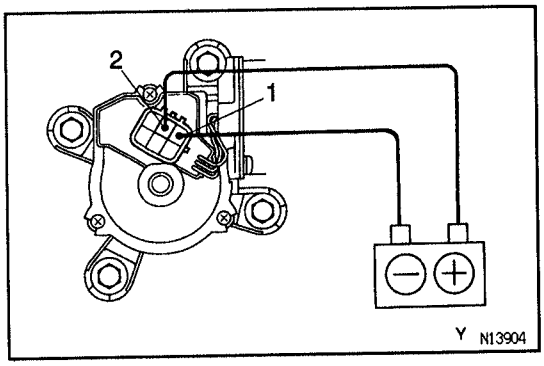

High Speed:

Connect the positive (+) lead from the battery to terminal 2 and the negative (−) lead from the battery to the motor body or terminal 1, and check that the motor operates at high speed.

If operation is not as specified, replace the motor.

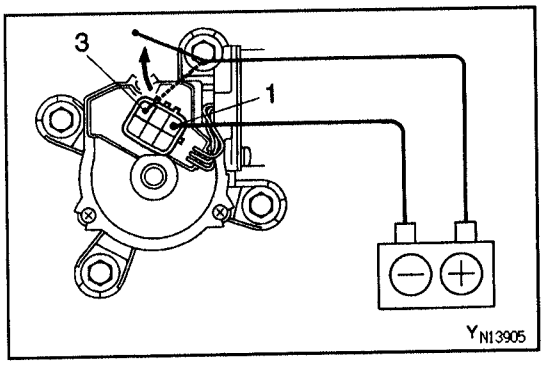

Stopping at Stop Position:

(a) Operate the motor at low speed and stop the motor operation anywhere except at the stop position by disconnecting positive (+) lead from terminal 3.

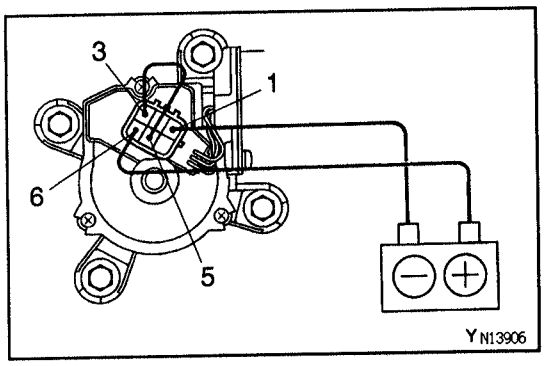

(b) Connect terminals 3 and 5.

(c) Connect the positive (+) lead from the battery to terminal 6 and the negative (−) lead from the battery to the motor body or terminal 1, and check that the motor stops running at the stop position after the motor operates again.

If operation is not as specified, replace the motor.

BE

BE01C-0D

WASHER MOTOR INSPECTION

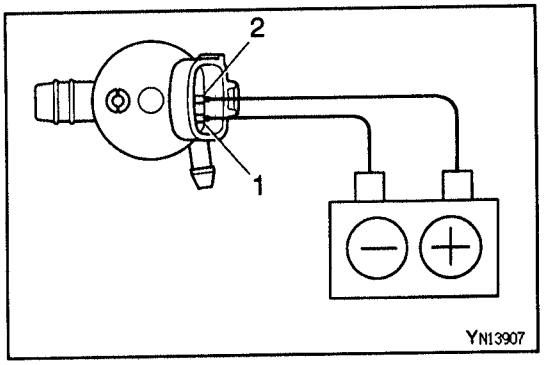

INSPECT MOTOR OPERATION

Connect the positive (+) lead from the battery to terminal 2 and the negative (−) lead to terminal 1, and check that the motor operates.

NOTICE: These tests must be performed quickly (within 20 seconds) to prevent the coil from burning out.

If operation is not as specified, replace the motor.

COMBINATION METER
PARTS LOCATION

BE2LD-02

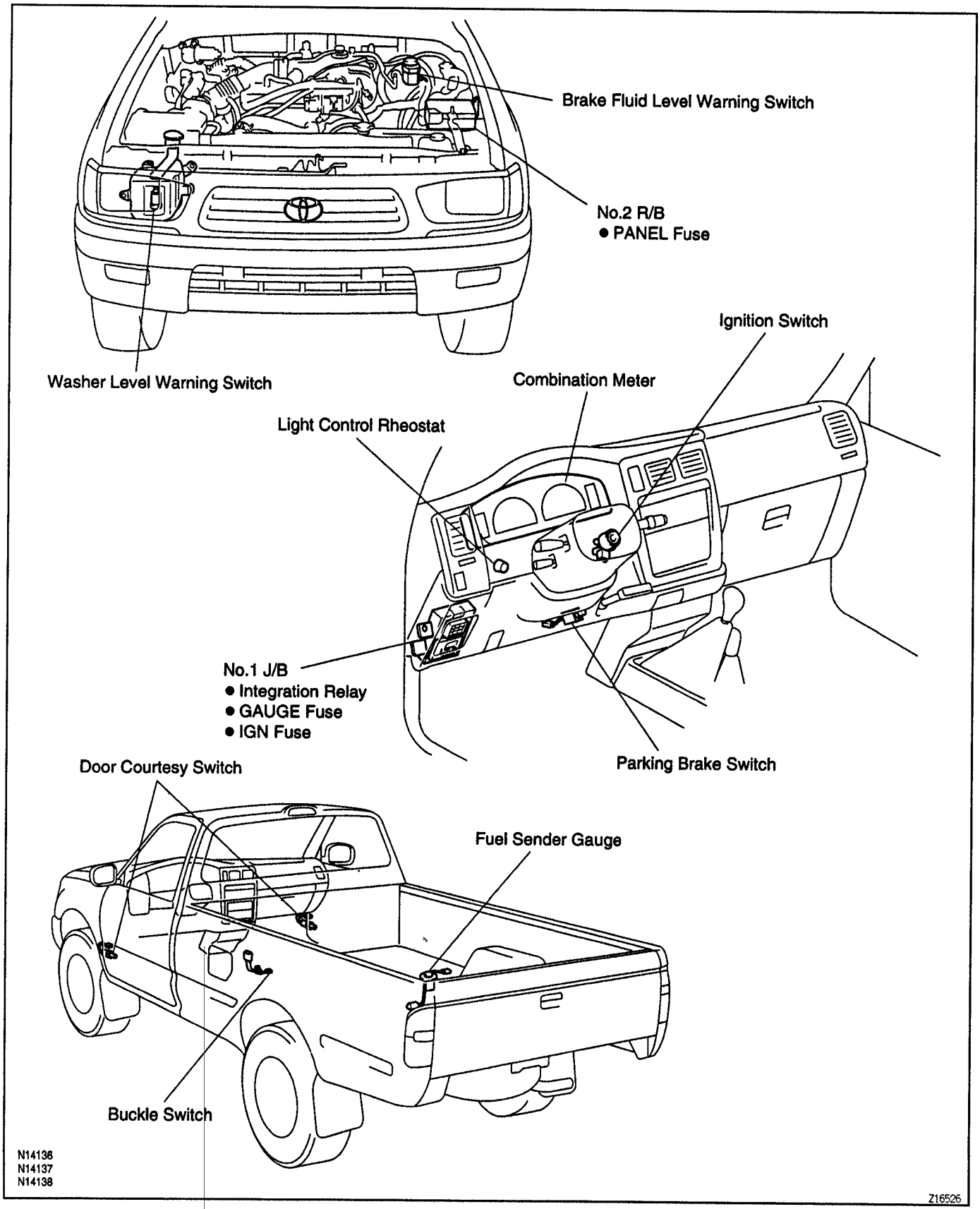

BE

RZN Series

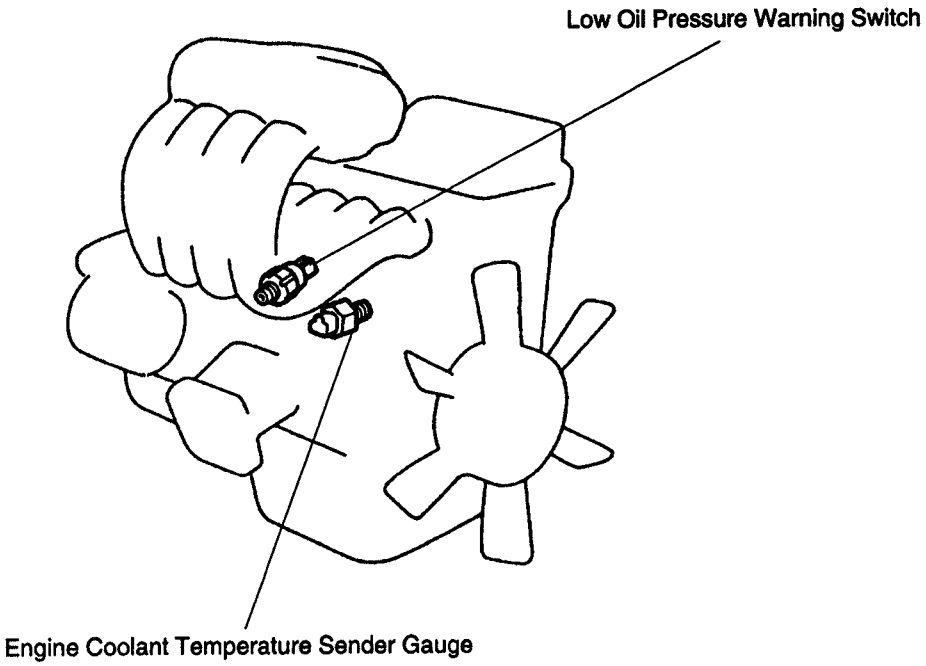

VZN Series

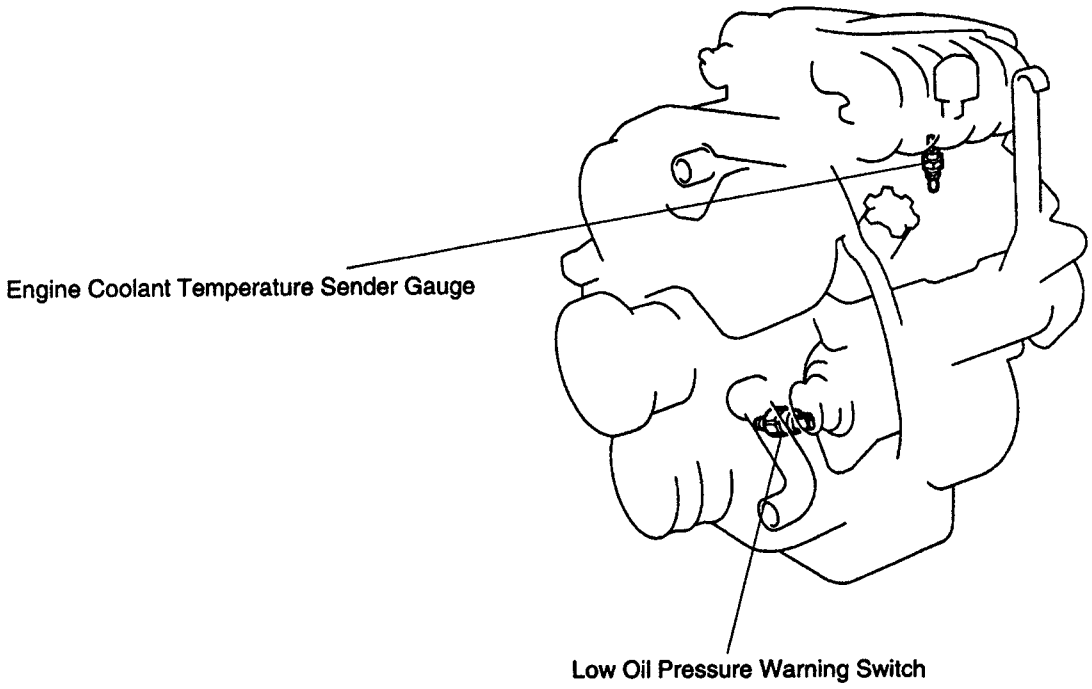

BE

Y

N14496

BE2TD-01

METER CIRCUIT

w/ Tachometer

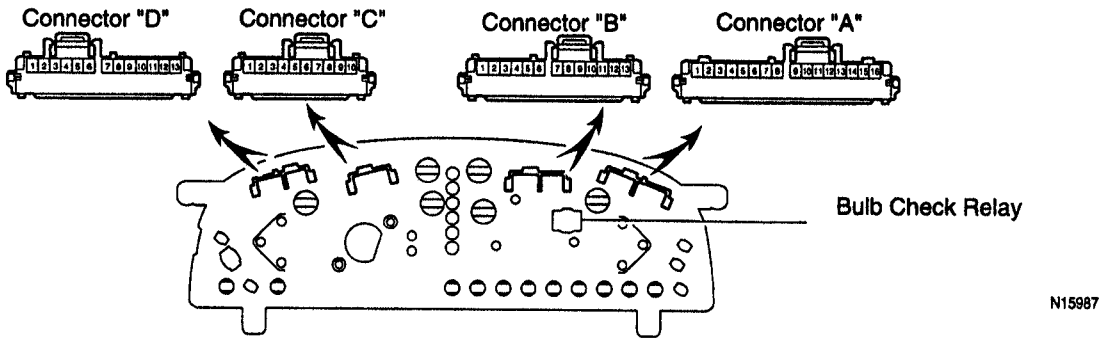

N15987

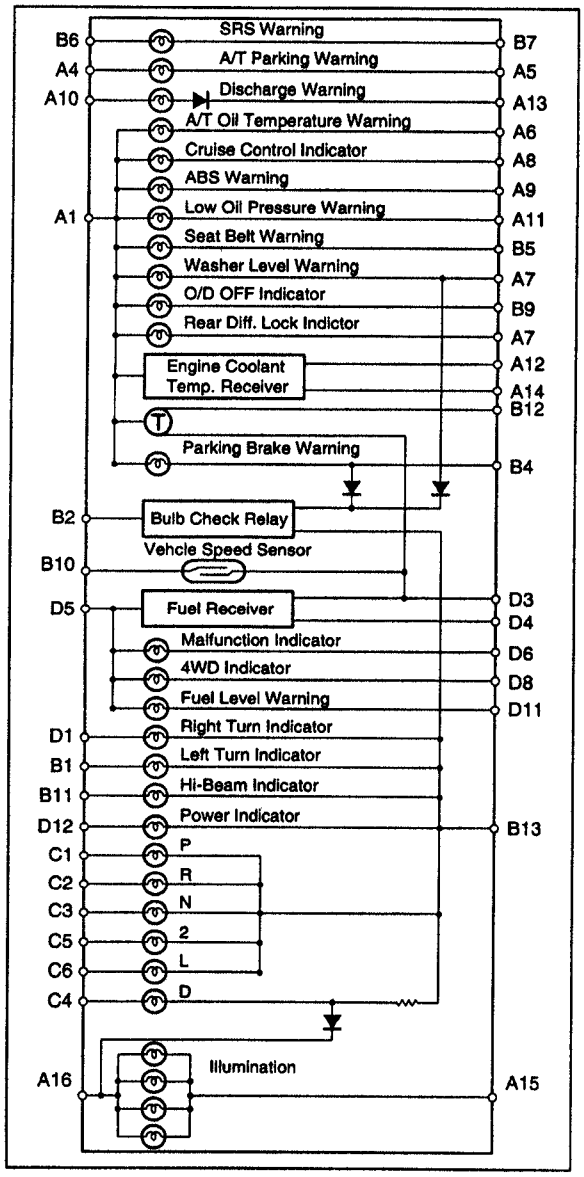

Ⓣ : TACHOMETER
Temp. : Temperature
Diff. : Differential

N15988

No.		Wiring connector side
A	1	GAUGE Fuse
	4	PNP switch (Floor A/T)
	5	PNP switch (Floor A/T)
	6	A/T oil temperature switch
	7	Washer level warning switch (CANADA) Rear diff. lock control ECU (USA)
	8	Cruise control ECU
	9	ABS ECU
	10	IGN Fuse
	11	Low oil pressure warning switch
	12	Engine coolant temperature sender gauge
	13	Generator L terminal
	14	Ground
	15	Light control rheostat
	16	TAIL Fuse
B	1	Turn signal switch (Left)
	2	STARTER Relay
	4	Parking brake switch Brake fluid level warning switch
	5	Buckle switch
	6	ECU-B Fuse
	7	Airbag sensor assembly
	9	O/D OFF switch
	10	Speed control unit
	11	Headlight dimmer switch
	12	Igniter
	13	Ground
C	1	PNP switch (Column A/T)
	2	PNP switch (Column A/T)
	3	PNP switch (Column A/T)
	4	PNP switch (Column A/T)
	5	PNP switch (Column A/T)
	6	PNP switch (Column A/T)
D	1	Turn signal switch (Right)
	3	Ground
	4	Fuel sender gauge
	5	GAUGE Fuse
	6	ECM
	8	Transfer indicator switch (M/T, Floor A/T)
	11	Fuel level warning switch (M/T, Floor A/T)
	12	Pattern select switch (A/T)

PNP : Park/Neutral Position

Y

Z16515

BE

w/ o Tachometer

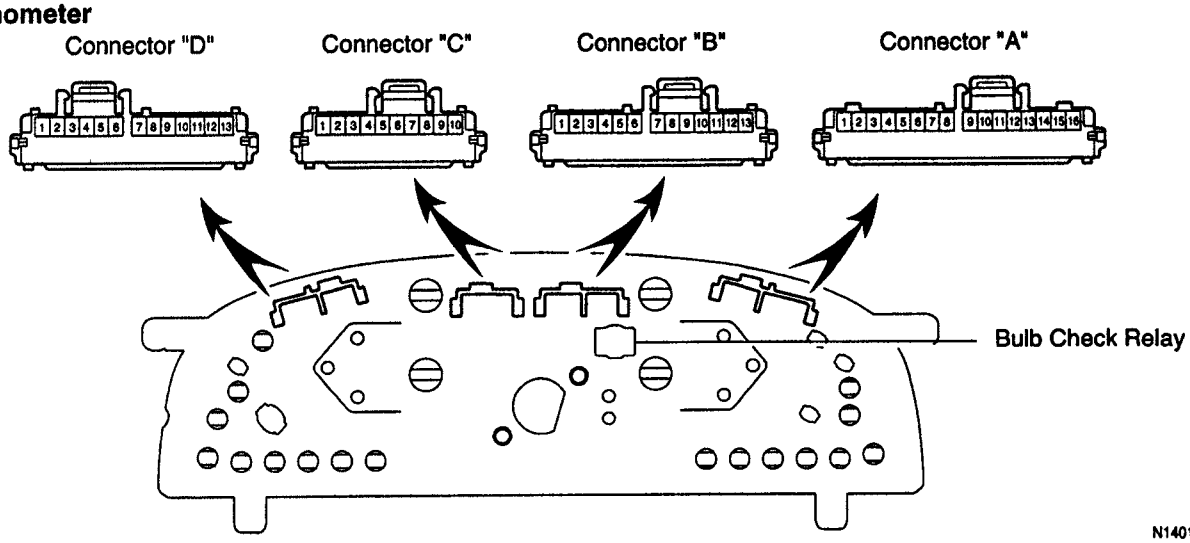

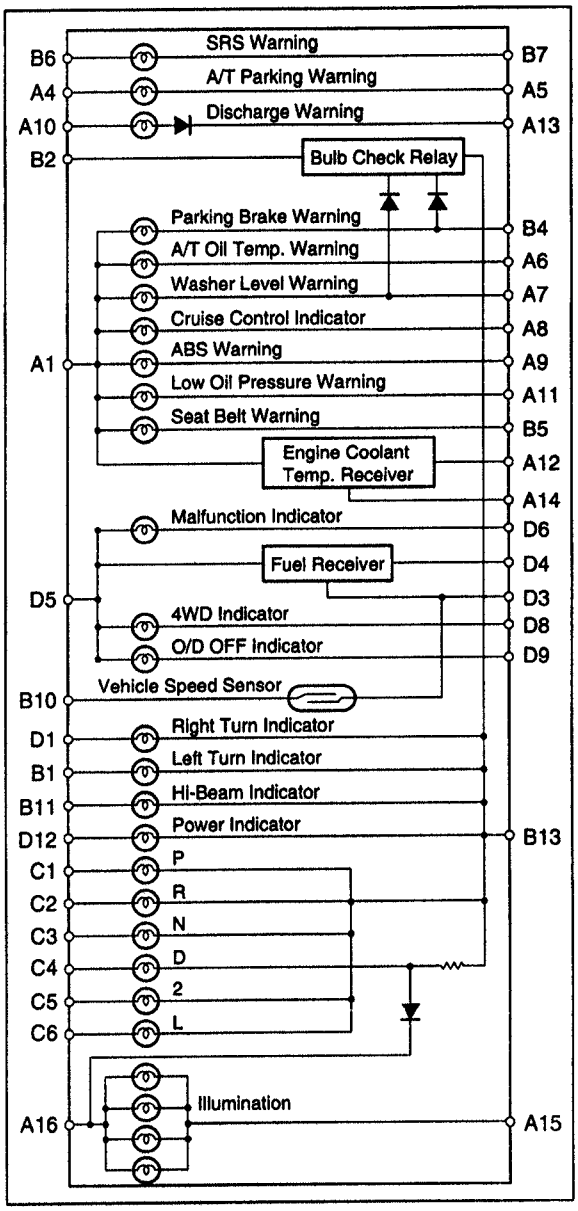

Temp. : Temperature
PNP : Park/Neutral Position

No.		Wiring connector side
A	1	GAUGE Fuse
	4	PNP switch (A/T)
	5	PNP switch (A/T)
	6	A/T oil temperature switch
	7	Washer level warning switch (CANADA)
	8	Cruise control ECU
	9	ABS ECU
	10	IGN Fuse
	11	Low oil pressure warning switch
	12	Engine coolant temperature sender gauge
	13	Generator L terminal
	14	Ground
	15	Light control rheostat
	16	TAIL Fuse
B	1	Turn signal switch (Left)
	2	STARTER Relay
	4	Parking brake switch
		Brake fluid level warning switch
	5	Buckle switch
	6	ECU-B Fuse
	7	Airbag sensor assembly
	9	O/D OFF switch
	10	Speed control unit
	11	Headlight dimmer switch
	13	Ground
C	1	PNP switch } Column A/T
	2	PNP switch
	3	PNP switch
	4	PNP switch
	5	PNP switch
	6	PNP switch
D	1	Turn signal switch (Right)
	3	Ground
	4	Fuel sender gauge
	5	GAUGE Fuse
	6	ECM
	8	Transfer indicator switch (M/T, Floor A/T)
	12	Pattern select switch (A/T)

N15989

Y Z16516

TROUBLESHOOTING

BE01E-0D

The table below will be useful for you in troubleshooting these electrical problems. The most likely causes of the malfunction are shown in the order of their probability. Inspect each part in the order shown, and replace the part when it is found to be faulty.

METER, GAUGES AND ILLUMINATION

Trouble	Parts name	(See page)
Tachometer and Engine Coolant Temperature Gauge do not operate	1. GAUGE Fuse (No.1 J/B) 2. Meter Circuit 3. Wire Harness	(BE–31)
Fuel Gauge does not operate	1. GAUGE Fuse (No.1 J/B) 2. Meter Circuit 3. Wire Harness	(BE–31)
Speedometer does not operate	1. Speedometer Driven Gear and Drive Gear	
Tachometer does not operate	1. Meter Circuit 2. Igniter 3. Wire Harness	(BE–31)
Fuel Gauge does not operate or abnormal operation	1. Fuel Receiver Gauge 2. Fuel Sender Gauge 3. Meter Circuit 4. Wire Harness	(BE–36) (BE–37) (BE–31)
Engine Coolant Temperature Gauge does not operate or abnormal operation	1. Engine Coolant Temperature Receiver Gauge 2. Meter Circuit 3. Wire Harness	(BE–38) (BE–31)
All illumination lights do not light up	1. PANEL Fuse (No.2 R/B) 2. Light Control Rheostat 3. Wire Harness	(BE–42)
Brightness does not change even when rheostat turned	1. Bulb 2. Light Control Rheostat 3. Wire Harness	(BE–42)
Only one illumination light does not light up	1. Bulb	

WARNING LIGHTS

Trouble	Parts name	(See page)
Warning lights do not light up (Except Discharge)	1. GAUGE Fuse (No.1 J/B) 2. IGN Fuse (No.1 J/B) 3. Meter Circuit 4. Wire Harness	(BE–31)
Low oil pressure warning light does not light up	1. Bulb 2. Meter Circuit 3. Low Oil Pressure Warning Switch 4. Wire Harness	(BE–31) (BE–39)
Fuel level warning light does not light up	1. Bulb 2. Meter Circuit 3. Fuel Level Warning Switch	(BE–31) (BE–38)
Malfunction indicator does not light up	1. Bulb 2. ECM* 3. Wire Harness	

Trouble	Parts name	(See page)
Seat belt warning light does not light up	1. Bulb 2. Integration Relay (No.1 J/B) 3. Buckle Switch 4. Wire Harness	 (BE–41)
Discharge warning light does not light up	1. IGN Fuse (No.1 J/B) 2. Bulb 3. Wire Harness 4. Generator	
Brake warning light does not light up	1. Bulb 2. Meter Circuit 3. Parking Brake Switch 4. Brake Fluid Level Warning Switch	 (BE–31) (BE–40) (BE–40)

*: 2RZ–FE, 3RZ–FE Engine See page EG–184.
5VZ–FE Engine See page EG–192.

INDICATOR LIGHTS

Trouble	Parts name	(See page)
O/D OFF indicator light does not light up	1. Bulb 2. Meter Circuit 3. O/D OFF Switch (A/T) 4. Wire Harness	 (BE–31) (See AT section)
High beam indicator light does not light up	1. Bulb 2. Meter Circuit 3. Wire Harness 4. Headlight and Taillight System	 (BE–31) (BE–7)
Turn indicator light does not light up	1. Bulb 2. Meter Circuit 3. Wire Harness 4. Turn Signal and Hazard Warning System	 (BE–31) (BE–15)
Shift indicator lights do not light up (ALL)	1. Bulb 2. Meter Circuit 3. PNP Switch (A/T) 4. Wire Harness	 (BE–31) (BE–22)
Shift indicator lights do not light up (D)	1. Bulb 2. Meter Circuit 3. PNP Switch (A/T) 4. Light Control Rheostat 5. Wire Harness	 (BE–31) (BE–22) (BE–41)
Only one shift indicator does not light up	1. Bulb 2. Meter Circuit	 (BE–31)
Indicator lights do not light up (Except. Turn, Hi–beam)	1. GAUGE Fuse (No.1 J/B) 2. Wire Harness	

BE1J4–08

SPEEDOMETER INSPECTION

INSPECT SPEEDOMETER (ON–VEHICLE)

(a) Using a speedometer tester, inspect the speedometer for allowable indication error and check the operation of the odometer.
HINT: Tire wear and tire over or under inflation will increase the indication error.
If error is excessive, replace the speedometer.

(b) Check the speedometer for pointer vibration and abnormal noise.

(km/h)

Standard indication	Allowable range
20	17 – 24
40	38 – 46
60	57.5 – 67
80	77 – 88
100	96 – 109
120	115 – 130
140	134 – 151.5
160	153 – 173

(mph)

Standard indication	Allowable range
20	18 – 24
40	38 – 44
60	58 – 66
80	78 – 88
100	98 – 110
120	118 – 132

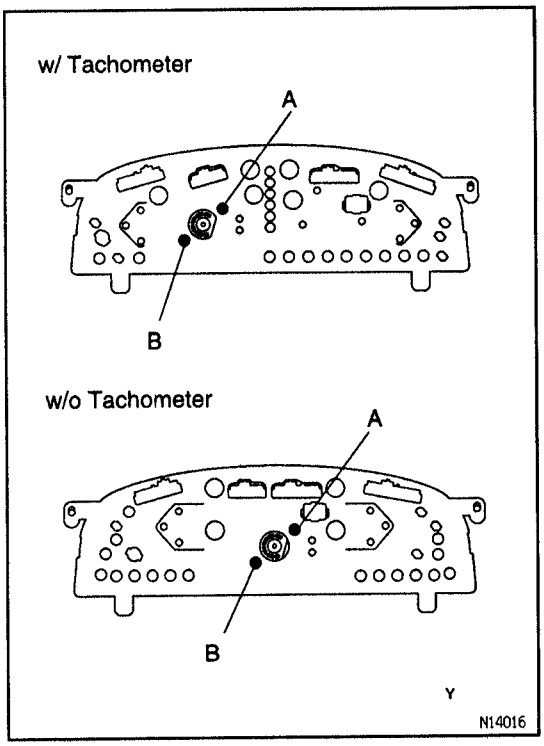

VEHICLE SPEED SENSOR INSPECTION

BE1J6-06

INSPECT SENSOR OPERATION

Check that there is continuity between terminals A and B 4 times for every revolution of the speedometer shaft.

If operation is not as specified, replace the speedometer.

TACHOMETER INSPECTION

BE01H-0C

INSPECT TACHOMETER ON–VEHICLE

(a) Connect a tune–up test tachometer, and start the engine.

NOTICE:

- **Reversing the connection of the tachometer will damage the transistors and diodes inside.**
- **When removing or installing the tachometer, be careful not to drop or subject it to heavy shocks.**

(b) Compare the tester and tachometer indications.

DC 13.5 V 20°C at (68 °F)

Standard indication (rpm)	Allowable range (rpm)
700	630 – 770
3,000	2,850 – 3,150
5,000	4,850 – 5,150
7,000	6,790 – 7,210

If error is excessive, replace the tachometer.

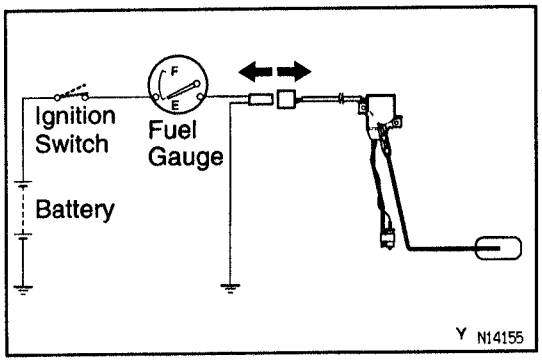

FUEL GAUGE INSPECTION

BE3LF-02

1. INSPECT RECEIVER GAUGE OPERATION

(a) Disconnect the connector from the sender gauge.

(b) Turn the ignition switch ON, check that the receiver gauge needle indicates EMPTY.

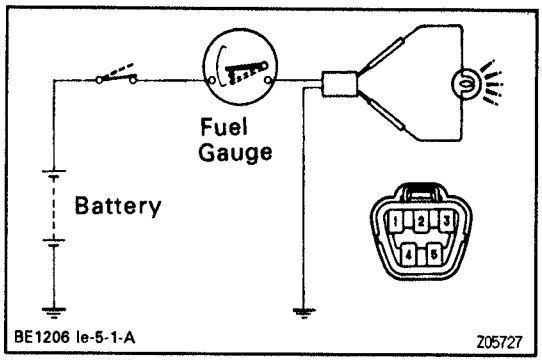

(c) Connect terminals 1 and 3 on the wire harness side connector through a 3.4 watts test bulb.

(d) Turn the ignition switch ON, check that the bulb lights up and the receiver gauge needle moves towards the full side.

HINT: Because of the silicon oil in the gauge, it will take a short time for needle to stabilize.

If operation is not as specified, inspect the receiver gauge resistance.

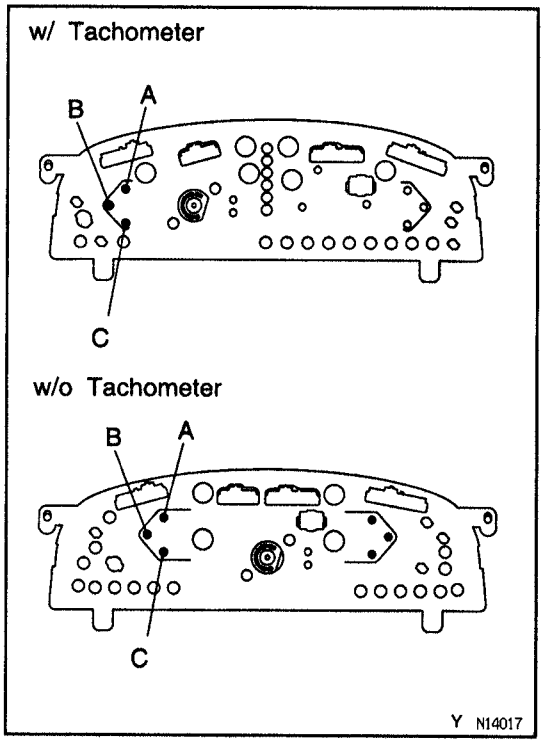

2. INSPECT RECEIVER GAUGE RESISTANCE

Measure the resistance between terminals.

w/ Tachometer

Between terminals	Resistance (Ω)
A – B	Approx. 140~158
A – C	Approx. 233~271
B – C	Approx. 92~114

w/o Tachometer

Between terminals	Resistance (Ω)
A – B	Approx. 115~130
A – C	Approx. 208~244
B – C	Approx. 92~114

If resistance value is not as specified, replace the receiver gauge.

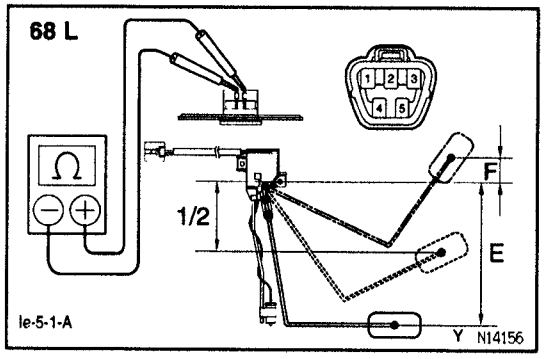

3. INSPECT SENDER GAUGE RESISTANCE

Measure the resistance between terminals 1 and 3.

68 L:

Float position mm (in.)	Resistance (Ω)
F: Approx. 28.0 (1.102)	F: Approx. 3.0
1/2: 81.3 (3.201)	1/2: Approx. 32.5
E: Approx. 163.9 (6.453)	E: Approx. 110.0

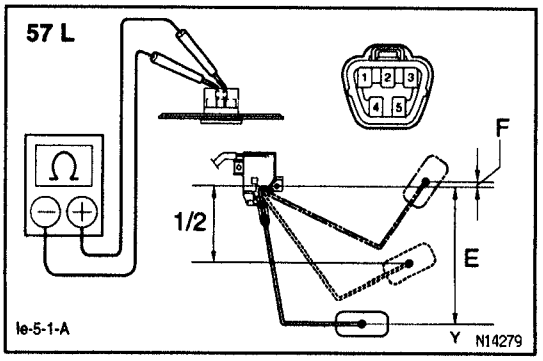

57 L:

Float position mm (in.)	Resistance (Ω)
F: Approx. 12.1 (0.476)	F: Approx. 3.0
1/2: 79.0 (3.110)	1/2: Approx. 32.5
E: Approx. 153.3 (6.035)	E: Approx. 110.0

If resistance value is not as specified, replace the sender gauge.

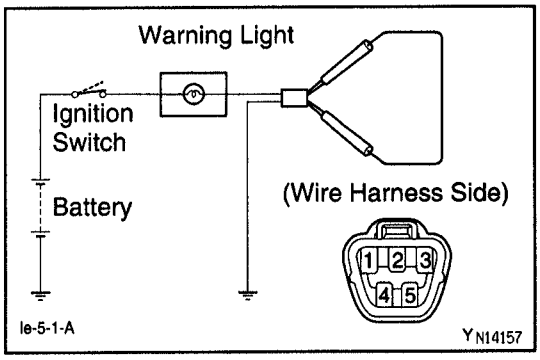

FUEL LEVEL WARNING INSPECTION

BE2DM-04

1. INSPECT WARNING LIGHT

(a) Disconnect the connector from the sender gauge.

(b) Connect terminals 1 and 3 on the wire harness side connector.

(c) Turn the ignition switch ON and check that the warning light lights up.
If the warning light does not light up, test the bulb.

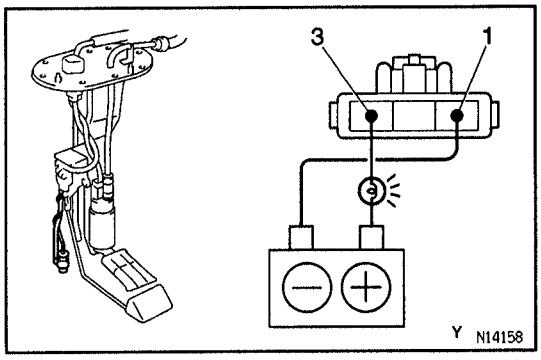

2. INSPECT SWITCH

(a) Apply battery positive voltage between terminals 1 and 3, and through a 3.4 W test bulb, and check that the bulb lights up.
HINT: It will take a short time for bulb to light up.

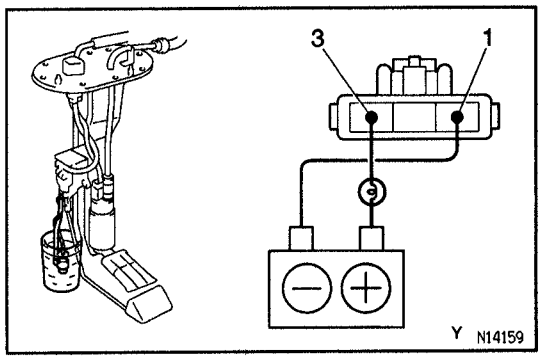

(b) Submerge the switch in fuel and check that the bulb goes out.
If operation is not as specified, replace the sender gauge.

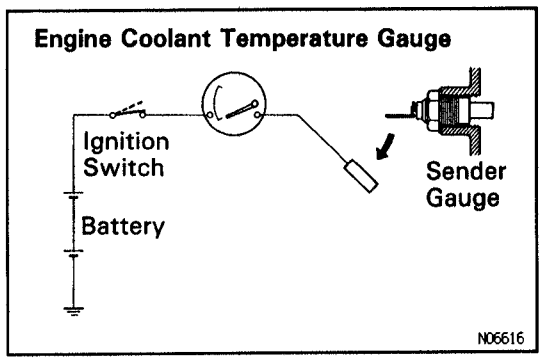

ENGINE COOLANT TEMPERATURE GAUGE INSPECTION

BE01L-06

1. INSPECT RECEIVER GAUGE OPERATION

(a) Disconnect the connector from the sender gauge.

(b) Turn the ignition switch ON and check that the receiver gauge needle indicates COOL.

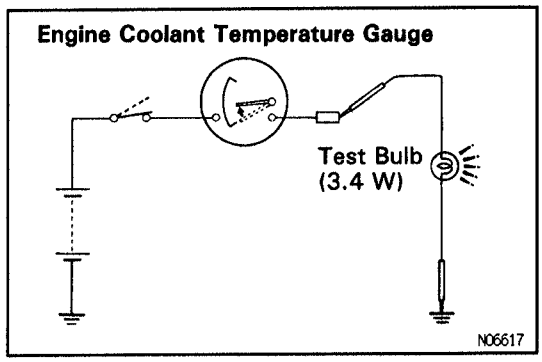

(c) Ground terminal on the wire harness side connecter through a 3.4 W test bulb.

(d) Turn the ignition switch ON, and check that the bulb lights up and the receiver gauge needle moves to the hot side.
If operation is as specified, replace the sender gauge. Then, recheck the system.
If operation is not as specified, measure the receiver gauge resistance.

BE

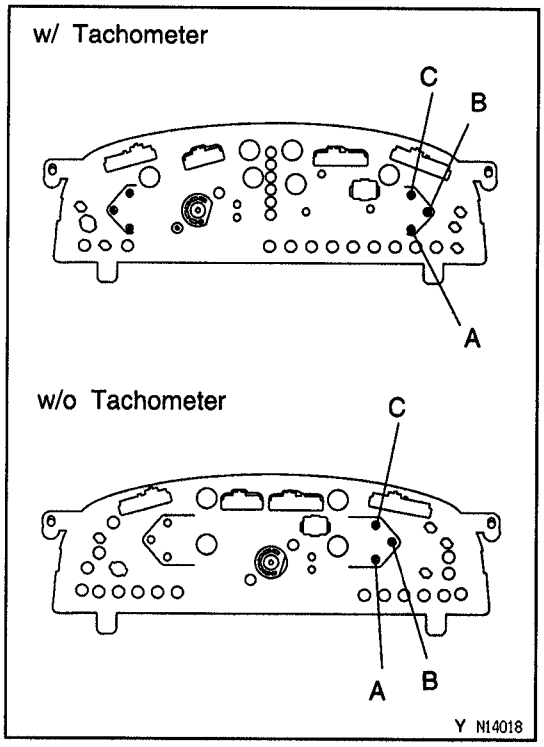

2. INSPECT RECEIVER GAUGE RESISTANCE

Measure the resistance between terminals.

w/ Tachometer

Between terminals	Resistance (Ω)
A – B	Approx. 85~95
A – C	Approx. 158~192
B – C	Approx. 215~255

w/o Tachometer

Between terminals	Resistance (Ω)
A – B	Approx. 85~95
A – C	Approx. 158~192
B – C	Approx. 215~255

HINT: Connect the test leads so that the current from the ohmmeter can flow according to the above order. This circuit includes the diode.

If resistance value is not as specified, replace the receiver gauge.

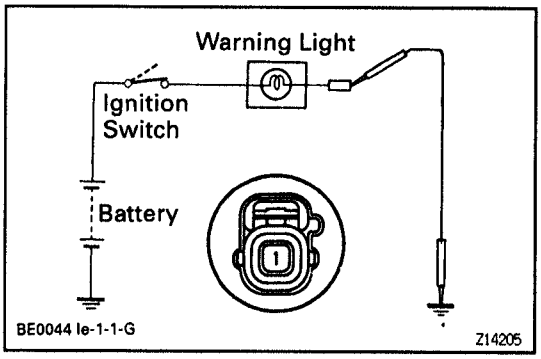

LOW OIL PRESSURE WARNING INSPECTION

BE2DN-04

1. INSPECT WARNING LIGHT

(a) Disconnect the connector from the warning switch and ground terminal on the wire harness side connector.

(b) Turn the ignition switch ON and check that the warning light lights up.

If the warning light does not light up, test the bulb.

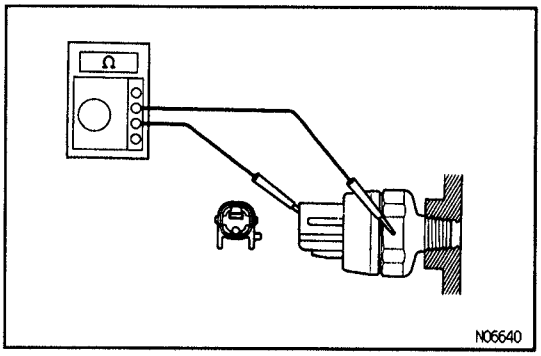

2. INSPECT SWITCH

(a) Disconnect the connector from the switch.

(b) Check that there is continuity between terminal and ground with the engine stopped.

(c) Check that there is no continuity between terminal and ground with the engine running.

HINT: Oil pressure should be over 49 kPa (0.5 kgf/cm², 7.1 psi).

If operation is not as specified, replace the switch.

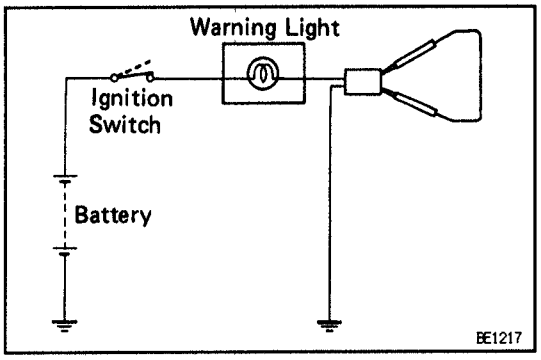

BRAKE WARNING INSPECTION

BE2LG-02

1. INSPECT WARNING LIGHT

(a) Disconnect the connectors from the level warning switch and parking brake switch.
(b) Connect terminals on the wire harness side connector of the level warning switch connector.
(c) Turn the ignition switch ON and check that the warning light lights up.
If the warning light does not light up, test the bulb.

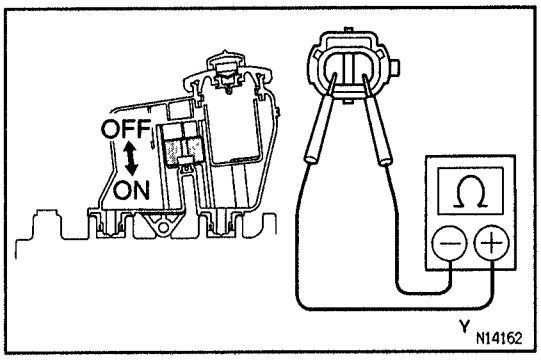

2. INSPECT BRAKE FLUID LEVEL WARNING SWITCH CONTINUITY

(a) Check that there is no continuity between terminals with the switch OFF (float up).
(b) Check that there is continuity between terminals with the switch ON (float down).
If operation is not as specified, replace the switch.

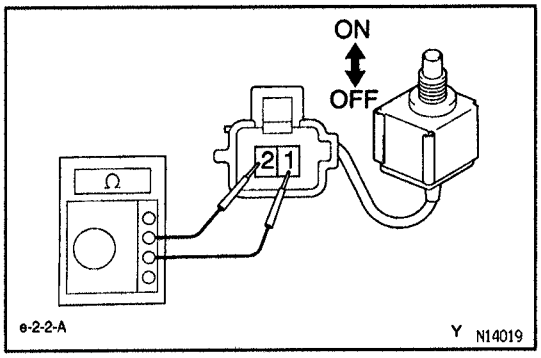

3. INSPECT PARKING BRAKE SWITCH CONTINUITY

(a) Check that there is continuity between terminals with the switch ON (switch pin released).
(b) Check that there is no continuity between terminals with the switch OFF (switch pin pushed in).
If operation is not as specified, replace the switch.

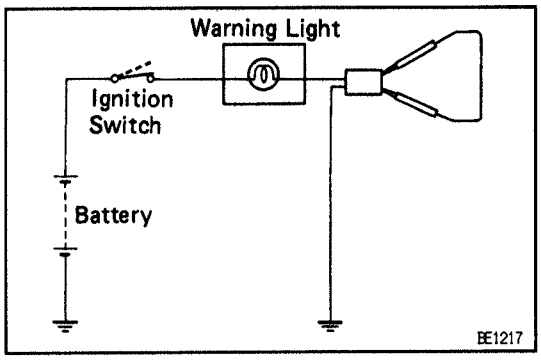

WASHER LEVEL WARNING INSPECTION

BE2DQ-03

1. INSPECT WARNING LIGHT

(a) Disconnect the connectors from the level warning switch and parking brake switch.
(b) Connect terminals on the wire harness side connector of the level warning switch connector.
(c) Remove the CHARGE fuse and turn the ignition switch ON, and check that the warning light comes on.
If the warning light does not light up, test the bulb.

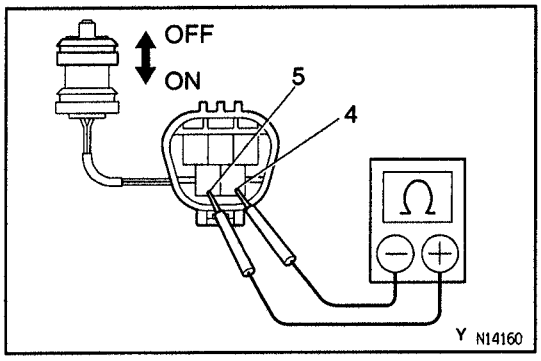

2. INSPECT SWITCH

(a) Check that there is no continuity between terminals with the switch OFF (float up).
(b) Check that there is continuity between terminals with the switch ON (float down).
If operation is not as specified, replace the switch.

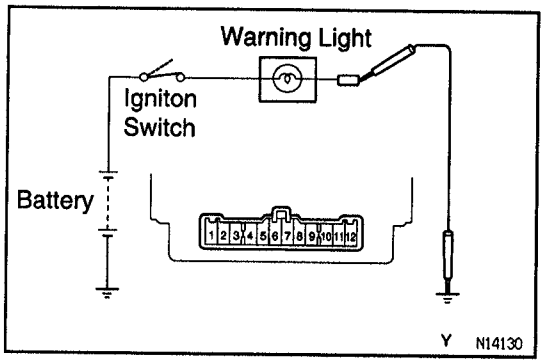

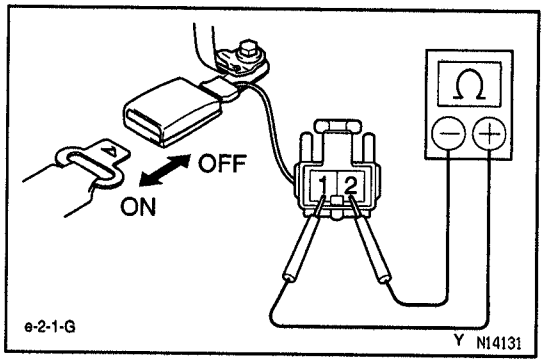

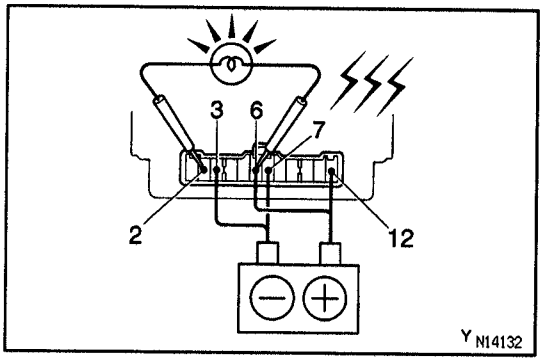

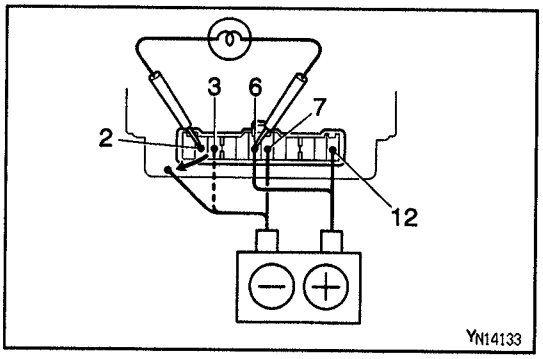

SEAT BELT WARNING INSPECTION

BE2DR–04

1. INSPECT WARNING LIGHT

(a) Remove the integration relay from the No.1 J/B.

(b) Ground terminal 9 on the junction block side connector.

(c) Turn the ignition switch ON and check that the warning light lights up.

If the warning light does not light up, inspect the bulb or wire harness.

2. INSPECT BUCKLE SWITCH CONTINUITY

(a) Check that there is continuity between terminals on the switch side connector with the switch ON (belt unfastened).

(b) Check that there is no continuity between terminals on the switch side connector with the switch OFF (belt fastened).

If operation is not as specified, replace the seat belt inner.

3. INSPECT INTEGRATION RELAY OPERATION

(a) Connect the positive (+) lead from the battery to terminal 12 and negative (–) lead from the battery to terminal 7.

(b) Connect the terminal 2 to terminal 5 through the 3.4 W test bulb.

(c) Connect the negative (–) lead from the battery to terminal 3.

(d) Check that the bulb lights and the chime sounds for 4 – 8 seconds.

(e) Return to step (a) and operate the chime again.

(f) Check that the buzzer does not sounds when disconnecting terminal 3 from the negative (–) lead.

(g) Check that the chime stops sounding.

HINT: Check the chime within a period of 4 to 8 seconds.

If operation is not as specified, replace the relay.

4. INSPECT INTEGRATION RELAY CIRCUIT

See page BE–5.

BE

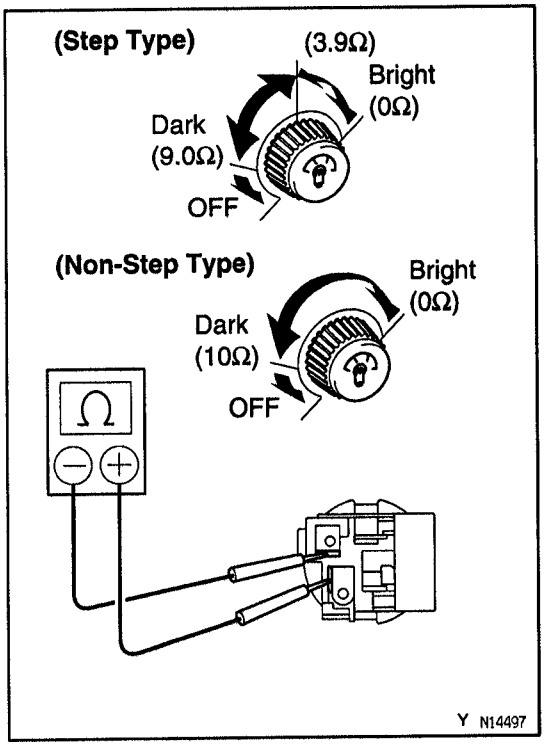

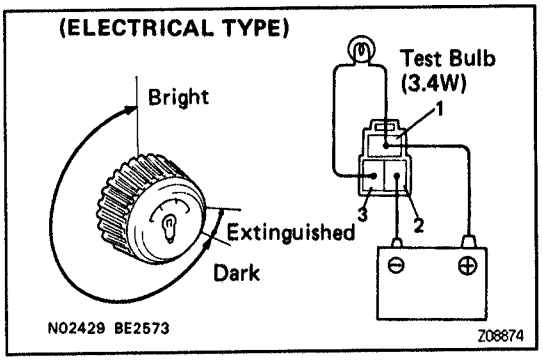

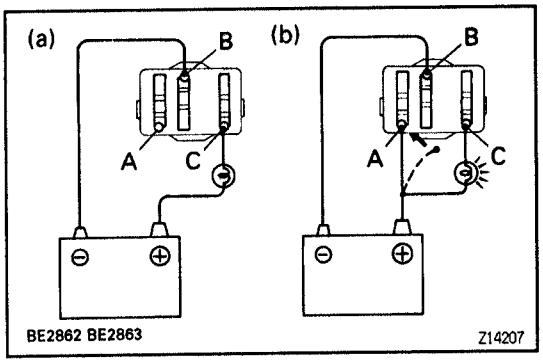

LIGHT CONTROL RHEOSTAT INSPECTION

BE3LH-02

INSPECT LIGHT CONTROL RHEOSTAT

STEP TYPE:

w/o Tachometer (DLX Grade M/T Vehicle)

Gradually turn the rheostat knob from the bright side to dark side, check that the resistance between terminals increases from approximately 0 to 9.0 Ω.

If operation is not as specified, replace the rheostat.

NON–STEP TYPE:

w/ Tachometer (DLX Grade M/T Vehicle)

(a) Turn the rheostat knob OFF and check that there is no continuity between terminals. (Rheostat knob turned to fully counterclockwise)

(b) Gradually, turn the rheostat knob from the dark side to bright side and check that the resistance decreases from 10 to 0 Ω.(Rheostat knob turned to clockwise)

If operation is not as specified, replace the rheostat.

ELECTRICAL TYPE:

w/ All A/T Vehicle and SR5 Grade M/T Vehicle

(a) Connect terminals 1 and 3 through a 3.4 W test bulb.

(b) Connect the positive (+) lead from the battery to terminal 1 and the negative (–) lead to terminal 2.

(c) Turn the rheostat knob to fully counterclockwise and check that the test bulb goes out.

(d) Gradually turn the rheostat knob to clockwise and check that the test bulb brightness changes from dark to bright.

If operation is not as specified, replace the rheostat.

BULB CHECK RELAY INSPECTION

BE0J0-08

INSPECT RELAY OPERATION

(a) Connect the positive (+) lead from the battery to terminal C through a 1.4 W test bulb and the negative (–) lead to terminal B, check that the test bulb does not light up.

(b) Connect the positive (+) lead from the battery to terminal A and check that the test bulb lights up.

If operation is not as specified, replace the relay.

BE

POWER WINDOW CONTROL SYSTEM

PARTS LOCATION

B501U–0C

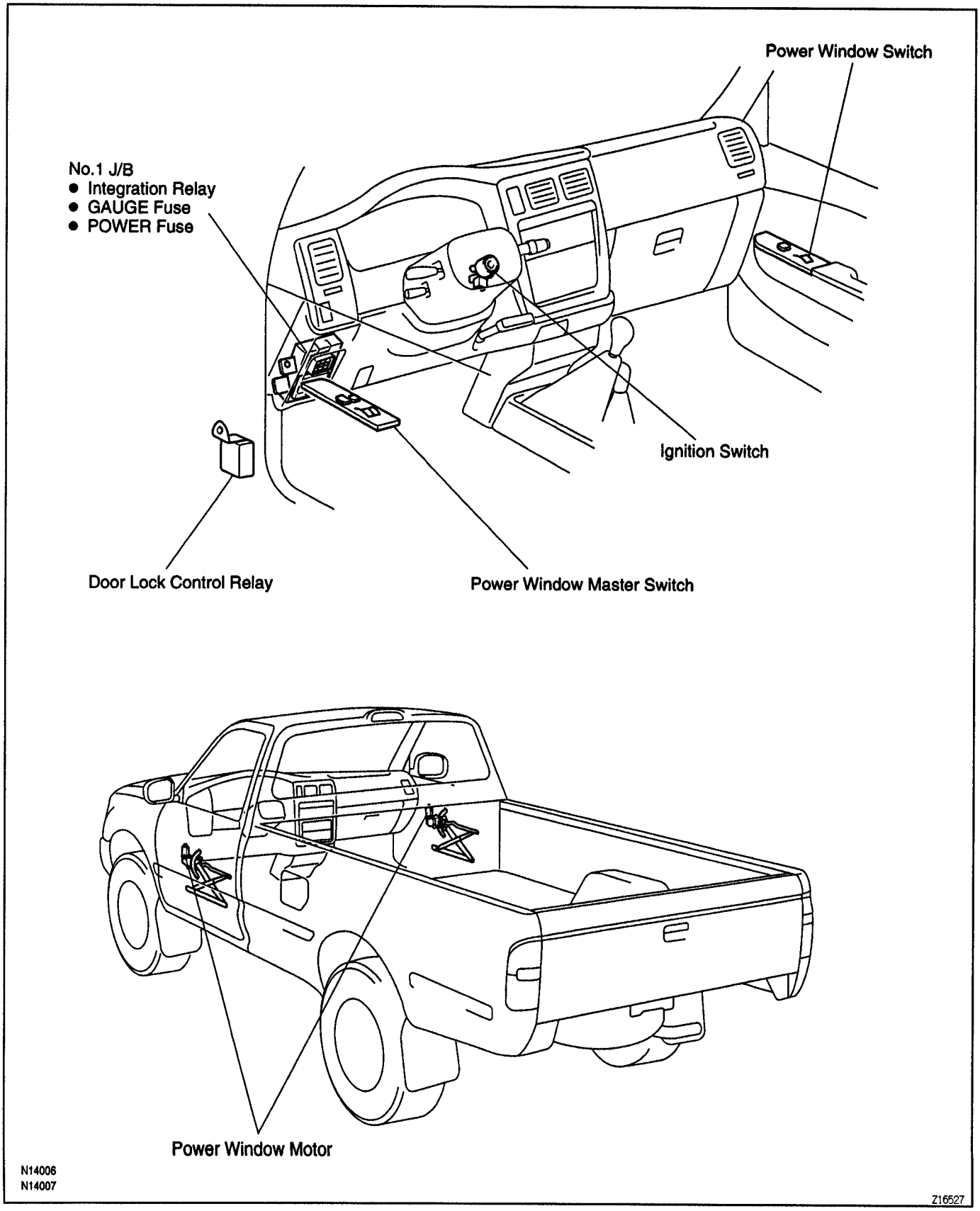

BE01V-0E

TROUBLESHOOTING

The table below will be useful for you in troubleshooting these electrical problems. The most likely causes of the malfunction are shown in the order of their probability. Inspect each part in the order shown, and replace the part when it is found to be faulty.

Trouble	Parts name	(See page)
Power window does not operate (Power door lock system does not operate.)	1. POWER Fuse (No.1 J/B)	
	2. GAUGE Fuse (No.1 J/B)	
	3. Integration Relay (No.1 J/B)	
	4. Door Lock Control Relay	(BE–52)
	5. Ignition Switch	(BE–4)
	6. Power Window Master Switch	(BE–44)
	7. Wire Harness	
Power Window does not operate (Power door lock system is normal.)	1. POWER Fuse (No.1 J/B)	
	2. GAUGE Fuse (No.1 J/B)	
	3. Ignition Switch (No.1 J/B)	
	4. Integration Relay (No.1 J/B)	
	5. Door Lock Control Relay	(BE–52)
	6. Power Window Master Switch	(BE–44)
	7. Wire Harness	
"One Touch Power Window System" does not operate	1. Power Window Master Switch	(BE–44)
Only one window glass does not move	1. Power Window Master Switch	(BE–44)
	2. Power Window Switch	(BE–45)
	3. Power Window Motor	(BE–45)
	4. Wire Harness	
"Window Lock System" does not operate	1. Power Window Master Switch	(BE–44)

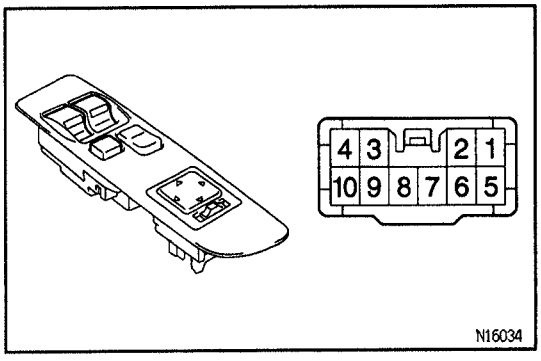

BE01W-0E

POWER WINDOW MASTER SWITCH INSPECTION

INSPECT SWITCH CONTINUITY

Driver's switch: Window unlock

Switch position	Tester connection	Specified condition
UP	3 – 9, 4 – 6	Continuity
OFF	3 – 4 – 6	Continuity
DOWN	3 – 6, 4 – 9	Continuity

Driver's switch: Window lock

Switch position	Tester connection	Specified condition
UP	3 – 9, 4 – 6	Continuity
OFF	3 – 4 – 6	Continuity
DOWN	3 – 6, 4 – 9	Continuity

Passenger's switch: Window unlock

Switch position	Tester connection	Specified condition
UP	6 – 7, 9 – 10	Continuity
OFF	6 – 7 – 10	Continuity
DOWN	7 – 9, 6 – 10	Continuity

Passenger's switch: Window lock

Switch position	Tester connection	Specified condition
UP	9 – 10	Continuity
OFF	7 – 10	Continuity
DOWN	7 – 9	Continuity

If continuity is not as specified, replace the switch.

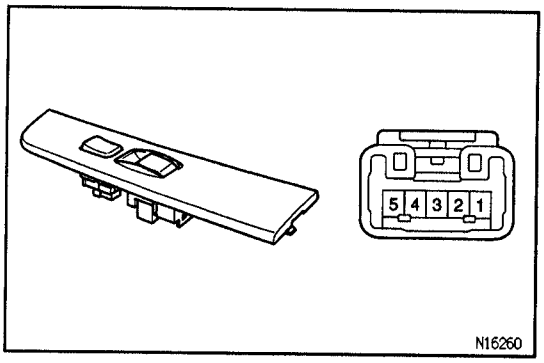

POWER WINDOW SWITCH INSPECTION BE01X-06

INSPECT SWITCH CONTINUITY

Switch position	Tester connection	Specified condition
UP	1 – 2, 3 – 4	Continuity
OFF	1 – 2, 3 – 5	Continuity
DOWN	3 – 5, 1 – 4	Continuity

If continuity is not as specified, replace the switch.

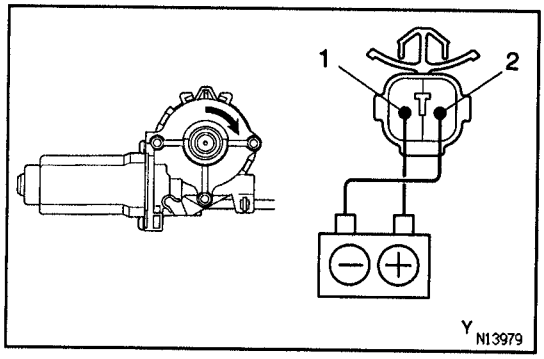

POWER WINDOW MOTOR INSPECTION BE01Y-07

INSPECT MOTOR OPERATION

Driver's Side:

(a) Connect the positive (+) lead from the battery to terminal 1 and negative (–) lead to terminal 2. Check that the motor turns clockwise.

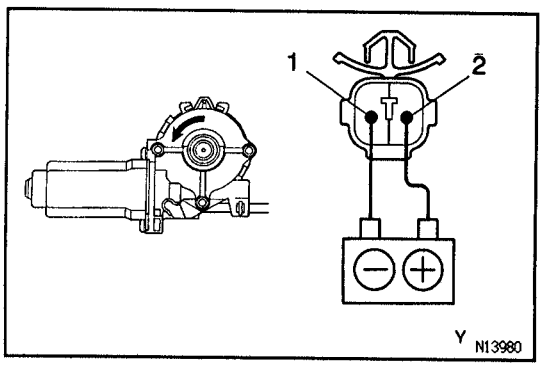

(b) Reverse the polarity, check that the motor turns counterclockwise.

If operation is not as specified, replace the motor.

BE

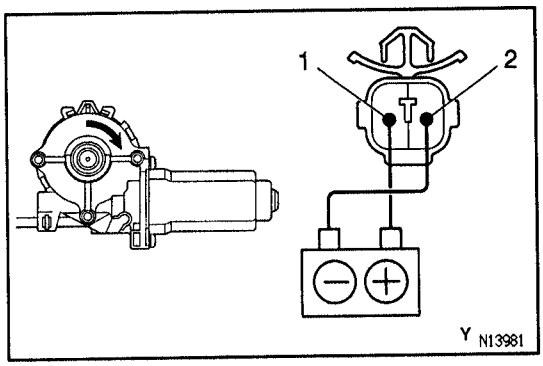

Passenger's Side:

(a) Connect the positive (+) lead from the battery to terminal 1 and negative (–) lead to terminal 2. Check that the motor turns counterclockwise.

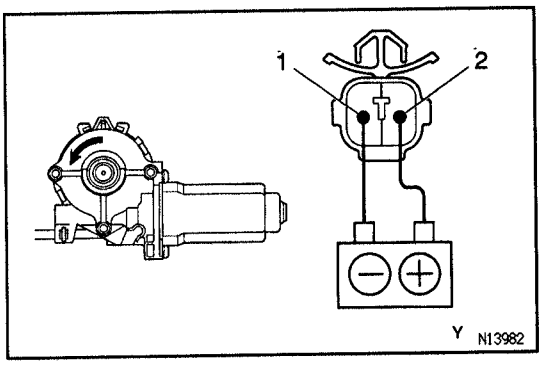

(b) Reverse the polarity, check that the motor turns clockwise.
If operation is not as specified, replace the motor.

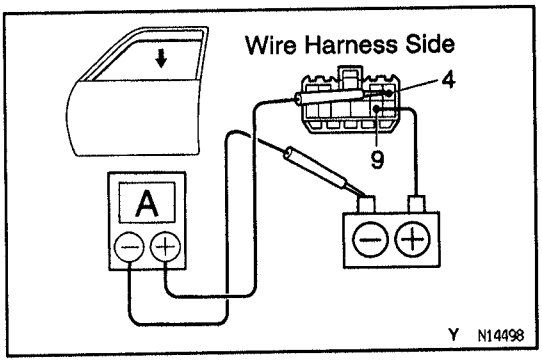

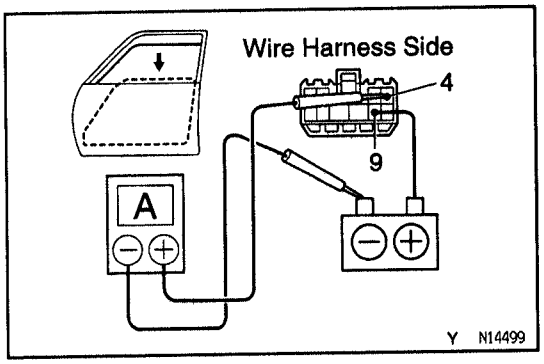

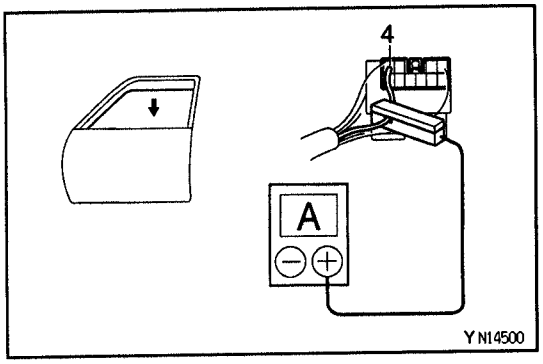

BE01Z–06

ONE TOUCH POWER WINDOW INSPECTION

INSPECT POWER WINDOW

Using an ammeter

(a) Disconnect the connector of the master switch.
(b) Connect the positive (+) lead from the ammeter to terminal 4 on the wire harness side connector and the negative (–) lead to negative terminal of the battery.
(c) Connect the positive (+) lead from the battery to terminal 9 on the wire harness side connector.
(d) As the window goes down, check that the current increases to approximately 7.0 A.
(e) Check that the current increases to approximately 14.5 A or more when the window stops going down.
HINT: The circuit breaker opens some 4 – 40 seconds after the window stops going down, so that the check must be done before the circuit breaker operates.
If the operation is as specified, replace the master switch.

Using an ammeter with a current – measuring probe.

(a) Remove the master switch with connector connected.
(b) Attach a current–measuring probe to terminal 3 of the wire harness.
(c) Turn the ignition switch ON and set the power window switch in the down position.
(d) As the window goes down, check that the current increases to approximately 7.0 A.

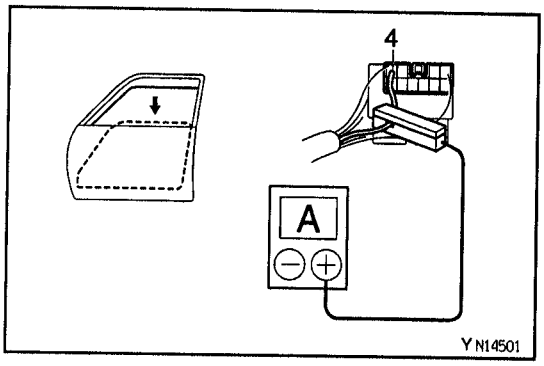

(e) Check that the current increases to approximately 14.5 A or more when the window stops going down.
HINT: The circuit breaker opens some 4 – 40 seconds after the window stops going down, so that the check must be done before the circuit breaker operates.
If operation is as specified, replace master switch.

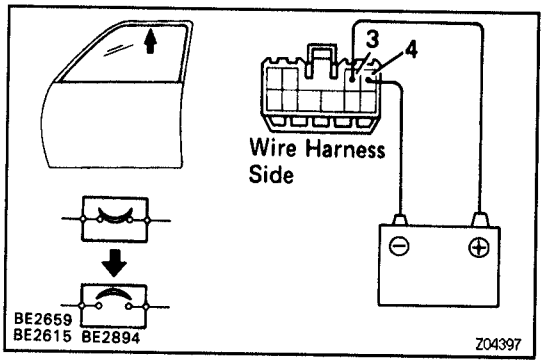

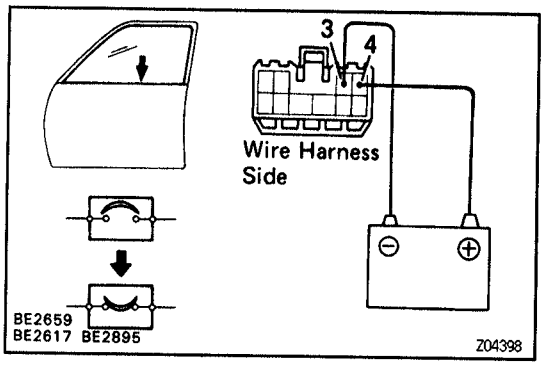

CIRCUIT BREAKER INSPECTION

BE020-05

INSPECT BREAKER OPERATION

(a) Disconnect the connector from the master switch.
(b) Connect the positive (+) lead from the battery to terminal 3 and the negative (–) lead to terminal 4 on the wire harness side connector, and raise the window to full closed position.
(c) Continue to apply voltage and check that there is a circuit breaker operation noise within approximately 4 – 40 seconds.
(d) Reverse the polarity and check that the window begins to descend within approximately 60 seconds.
If operation is not as specified, replace the motor.

DOOR LOCK CONTROL RELAY INSPECTION

BE3TE-01

See page BE–52.

POWER DOOR LOCK CONTROL SYSTEM

PARTS LOCATION

BE022-06

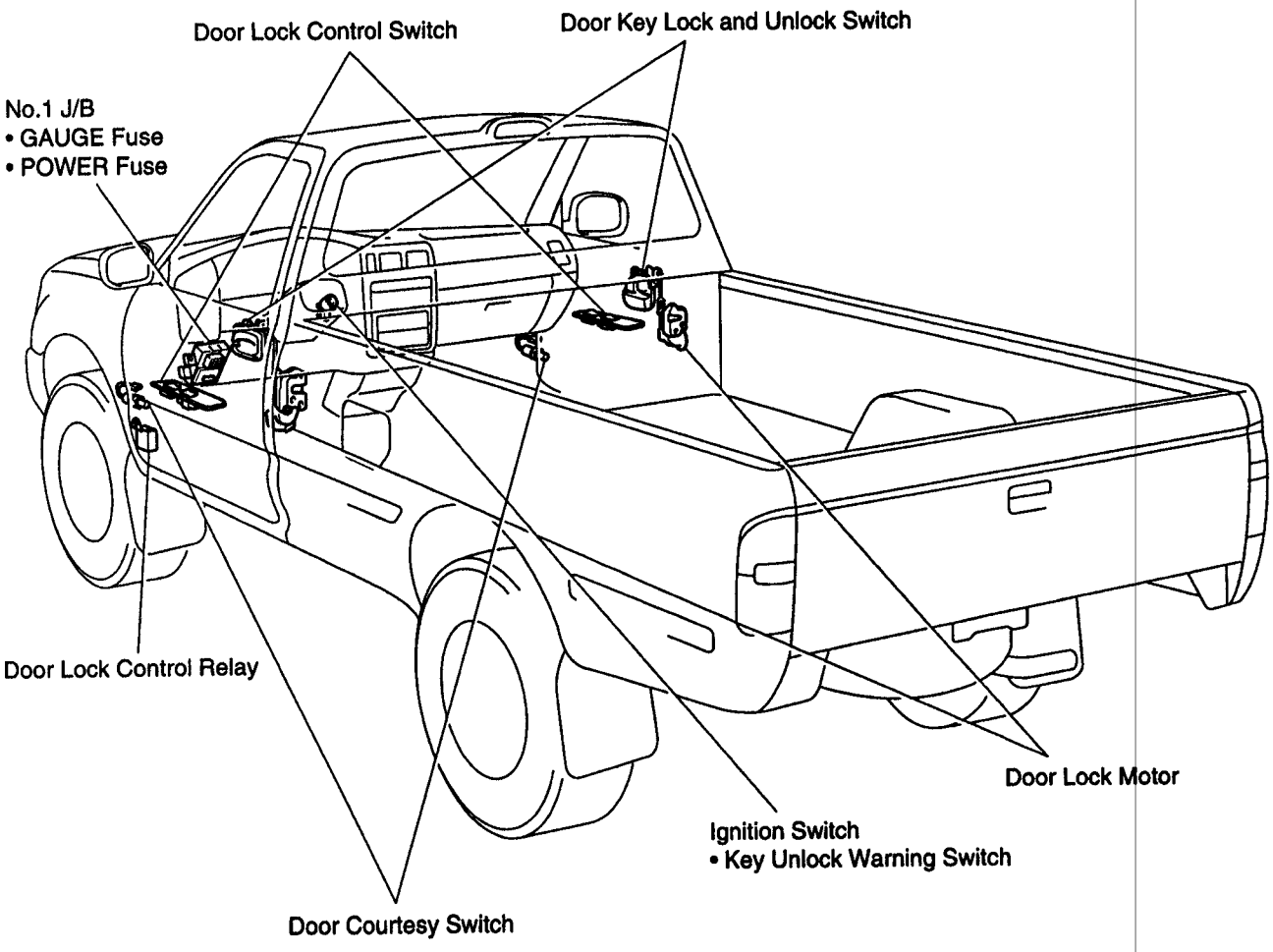

N16252

TROUBLESHOOTING

BE021-0E

The table below will be useful for you in troubleshooting these electrical problems. The most likely causes of the malfunction are shown in the order of their probability. Inspect each part in the order shown, and replace the part when it is found to be faulty.

Trouble	Parts name	(See page)
"Door lock control system" does not operate (All)	1. GAUGE Fuse (No.1 J/B) 2. POWER Fuse (No.1 J/B) 3. Door Lock Control Relay 4. Wire Harness 5. Other Parts	 (BE–52)
Malfunction in Door Lock / Unlock (Using door manual switch)	1. Door Lock Control Switch 2. Door Lock Control Relay 3. Wire Harness 4. Other Parts	(BE–50) (BE–52)
Malfunction in Door Lock / Unlock (Using door manual switch and key)	1. Wire Harness 2. Other Parts	
Malfunction in Door Lock / Unlock (Using Key)	1. Door Key Lock and Unlock Switch 2. Door Lock Control Relay 3. Wire Harness 4. Other Parts	(BE–50) (BE–52)
Fault in 2 – Operation unlock function of Driver's side door key Lock and Unlock switch	1. Door Key Lock and Unlock Switch 2. Door Lock Control Relay 3. Wire Harness 4. Other Parts	(BE–50) (BE–52)
Fault in key confine prevention operation	1. Key Unlock Warning Switch 2. Door Courtesy Switch 3. Door Lock Control Switch 4. Door Lock Control Relay 5. Wire Harness 6. Other Parts	(BE–5) (BE–20) (BE–50) (BE–52)
One door lock does not operate	1. Door Lock Motor 2. Wire Harness	(BE–50)

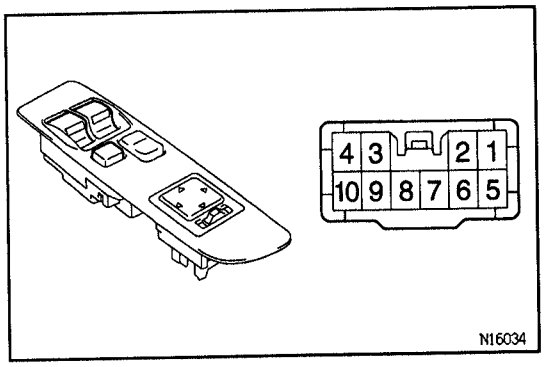

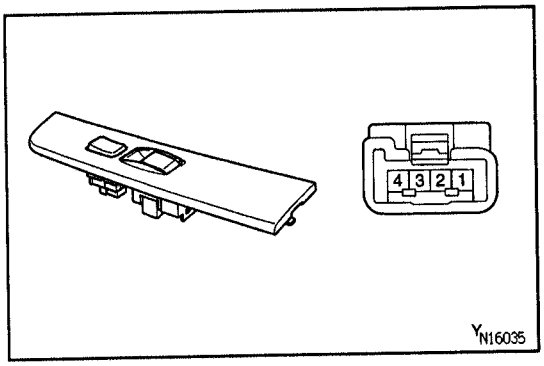

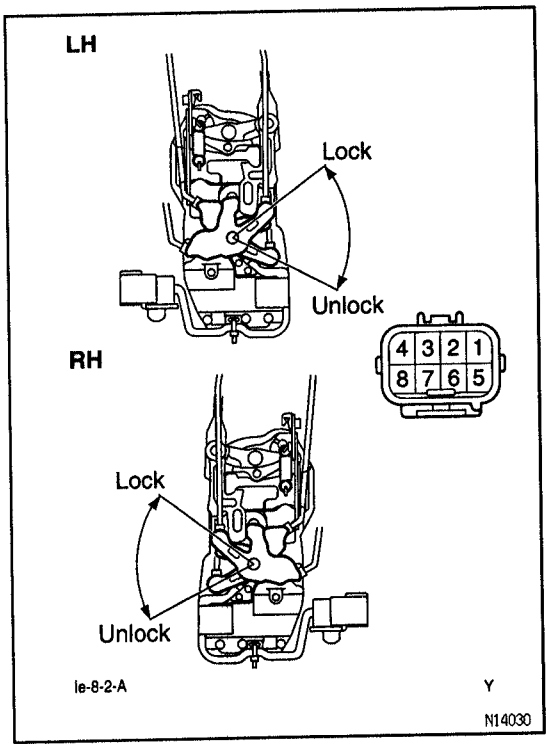

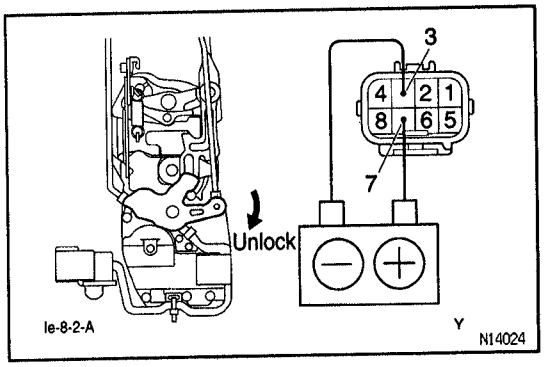

DRIVER'S DOOR LOCK CONTROL SWITCH INSPECTION

BE1J1-05

INSPECT SWITCH CONTINUITY

Switch position	Tester connection	Specified condition
LOCK	1 – 5, 2 – 6	Continuity
OFF	–	No continuity
UNLOCK	2 – 5, 1 – 6	Continuity

If continuity is not as specified, replace the switch.

PASSENGER'S DOOR LOCK CONTROL SWITCH INSPECTION

BE1J2-05

INSPECT SWITCH CONTINUITY

Switch position	Tester connection	Specified condition
LOCK	3 – 4	Continuity
OFF	–	No continuity
UNLOCK	2 – 4	Continuity

If continuity is not as specified, replace the switch.

DOOR KEY LOCK AND UNLOCK SWITCH INSPECTION

BE1AF-04

INSPECT SWITCH CONTINUITY

LH:

Switch position	Tester connection to terminal number	Specified condition
LOCK	5 – 6	Continuity
OFF	–	No continuity
UNLOCK	1 – 5	Continuity

If continuity is not as specified, replace the switch.

RH:

Switch position	Tester connection to terminal number	Specified condition
LOCK	8 – 7	Continuity
OFF	–	No continuity
UNLOCK	4 – 8	Continuity

If continuity is not as specified, replace the switch.

BE1J3-04

DRIVER'S DOOR LOCK MOTOR INSPECTION

INSPECT MOTOR OPERATION

(a) Connect the positive (+) lead from the battery to terminal 7 and the negative (–) lead to terminal 3, and check that the door lock link moves to UNLOCK position.

BE

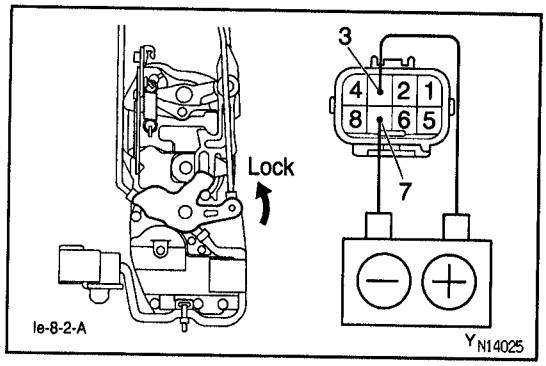

(b) Remove the polarity and check that the door lock link moves to LOCK position.
If operation is not as specified, replace the door lock assembly.

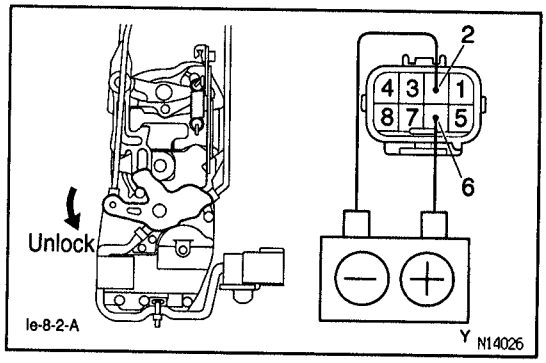

PASSENGER'S DOOR LOCK MOTOR INSPECTION

BE1J8-04

INSPECT MOTOR OPERATION

(a) Connect the positive (+) lead from the battery to terminal 6 and the negative (−) lead to terminal 2, and check that the door lock moves to UNLOCK position.

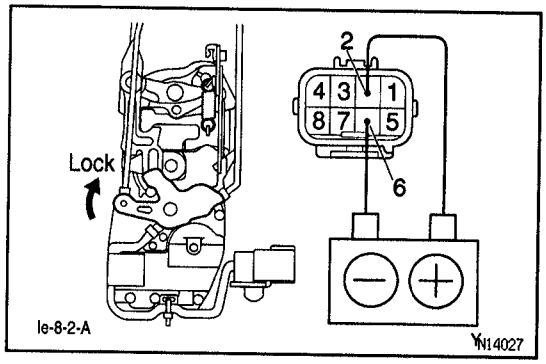

(b) Remove the polarity and check that the door lock link moves to LOCK position.
If operation is not as specified, replace the door lock assembly.

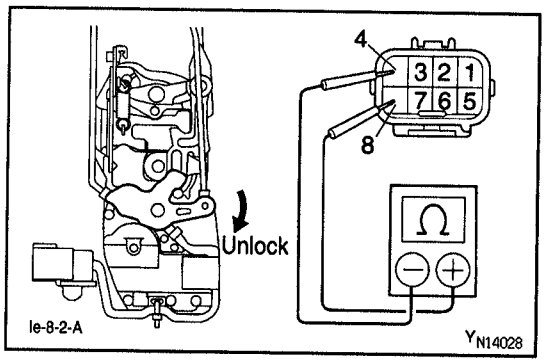

DRIVER'S DOOR UNLOCK DETECTION SWITCH INSPECTION

BE1J7-06

INSPECT SWITCH CONTINUITY

Switch position	Tester connection	Specified condition
OFF (Door Lock set to LOCK)	–	No continuity
ON (Door Lock set to UNLOCK)	4 – 8	Continuity

If continuity is not as specified, replace the switch.

BE

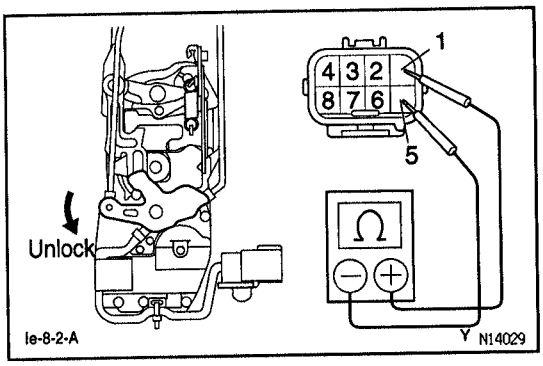

PASSENGER'S DOOR UNLOCK DETECTION SWITCH INSPECTION

BE1J8-05

INSPECT SWITCH CONTINUITY

Switch position	Tester connection	Specified condition
OFF (Door Lock set to LOCK)	–	No continuity
ON (Door Lock set to UNLOCK)	1 – 5	Continuity

If continuity is not as specified, replace the switch.

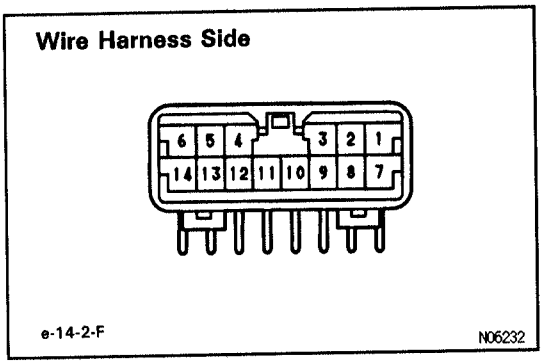

DOOR LOCK CONTROL RELAY INSPECTION

BE2DT-04

1. INSPECT RELAY CIRCUIT

Disconnect the connector from the relay and inspect the connector on the wire harness side, as shown in the chart.

If circuit is as specified, inspect the door lock signal and key–off power window signal.

Tester connection	Condition	Specified condition
3 – Ground	Door lock control switch or passenger's door key lock and unlock switch position LOCK or OFF	No continuity
3 – Ground	Door lock control switch or passenger's door key lock and unlock switch position UNLOCK or OFF	Continuity
4 – Ground	Door lock control switch or door key lock and unlock switch position UNLOCK	No continuity
4 – Ground	Door lock control switch or door key lock and unlock switch position LOCK	Continuity
7 – Ground	Passenger's door courtesy switch position OFF (Door closed)	No continuity
7 – Ground	Passenger's door courtesy switch position ON (Door opened)	Continuity
9 – Ground	Driver's door lock switch position UNLOCK	Continuity
9 – Ground	Driver's door lock switch position LOCK	No continuity

Tester connection	Condition	Specified condition
10 – Ground	Driver's key lock and unlock switch position Lock or OFF	No continuity
10 – Ground	Driver's key lock and unlock switch position UNLOCK	Continuity
11 – Ground	Constant	Continuity
12 – Ground	Passenger's door lock switch position UNLOCK	Continuity
12 – Ground	Passenger's door lock switch position LOCK	No continuity
14 – Ground	Driver's door courtesy switch position OFF (Door closed)	No continuity
14 – Ground	Driver's door courtesy switch position ON (Door opened)	Continuity
2 – Ground	Constant	Battery positive voltage
8 – Ground	Ignition switch position LOCK or ACC	No voltage
8 – Ground	Ignition switch position ON	Battery positive voltage
13 – Ground	Key unlock warning switch position OFF (Ignition key removed)	No voltage
13 – Ground	Key unlock warning switch position ON (Ignition key set)	Battery positive voltage

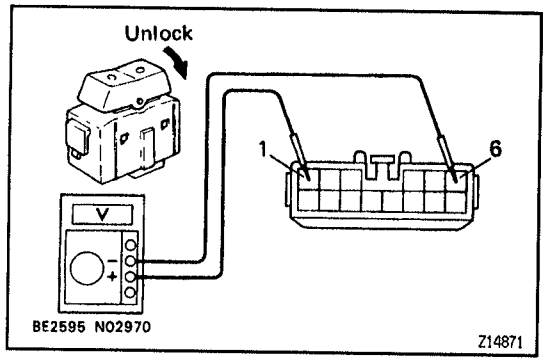

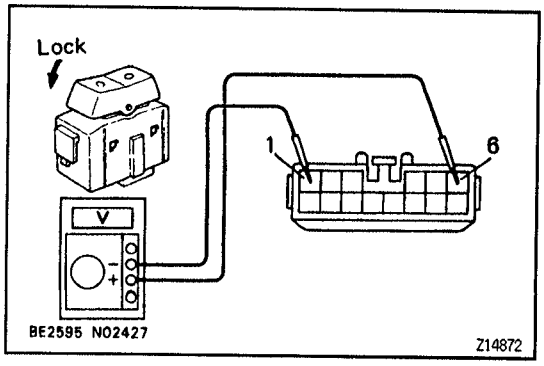

2. INSPECT DOOR LOCK SIGNAL

HINT: When the relay circuit is as specified, inspect the door lock signal.

(a) Connect the connector to the relay.

(b) Connect the positive (+) lead from the voltmeter to terminal 1 and the negative (–) lead to terminal 6.

(c) Set the door lock control switch to UNLOCK and check that the voltage rises from 0 V to battery positive voltage for approximately 0.2 seconds.

(d) Reverse the polarity of the voltmeter leads.

(e) Set the door lock control switch to LOCK and check that the voltage rises from 0 V to battery positive voltage for approximately 0.2 seconds.

If operation is not as specified, replace the relay.

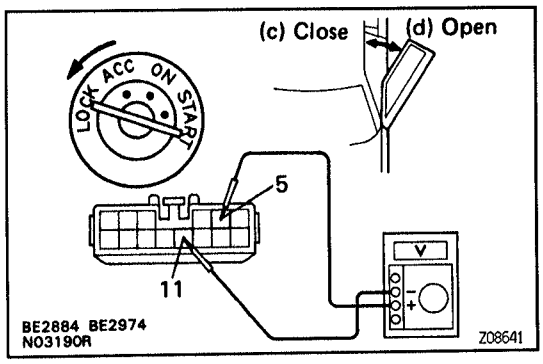

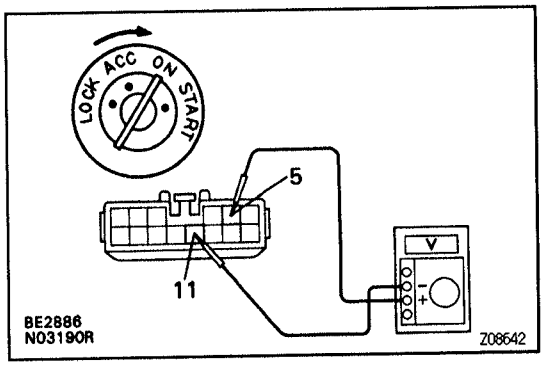

3. INSPECT KEY–OFF POWER WINDOW SIGNAL

HINT: When the relay circuit is as specified, inspect the key–off power window signal.

(a) Connect the connector to the relay.

(b) Connect the positive (+) lead from the voltmeter to terminal 5 and the negative (–) lead to terminal 11.

(c) Close the door with ignition switch turned to LOCK or ACC, and check that the meter needle indicates battery positive voltage.

(d) Open the door and check that the meter needle indicates 0 V.

(e) Turn the ignition switch ON and check that the meter needle indicates battery positive voltage again.

If operation is not as specified, replace the relay.

POWER MIRROR CONTROL SYSTEM

BE027-06

PARTS LOCATION

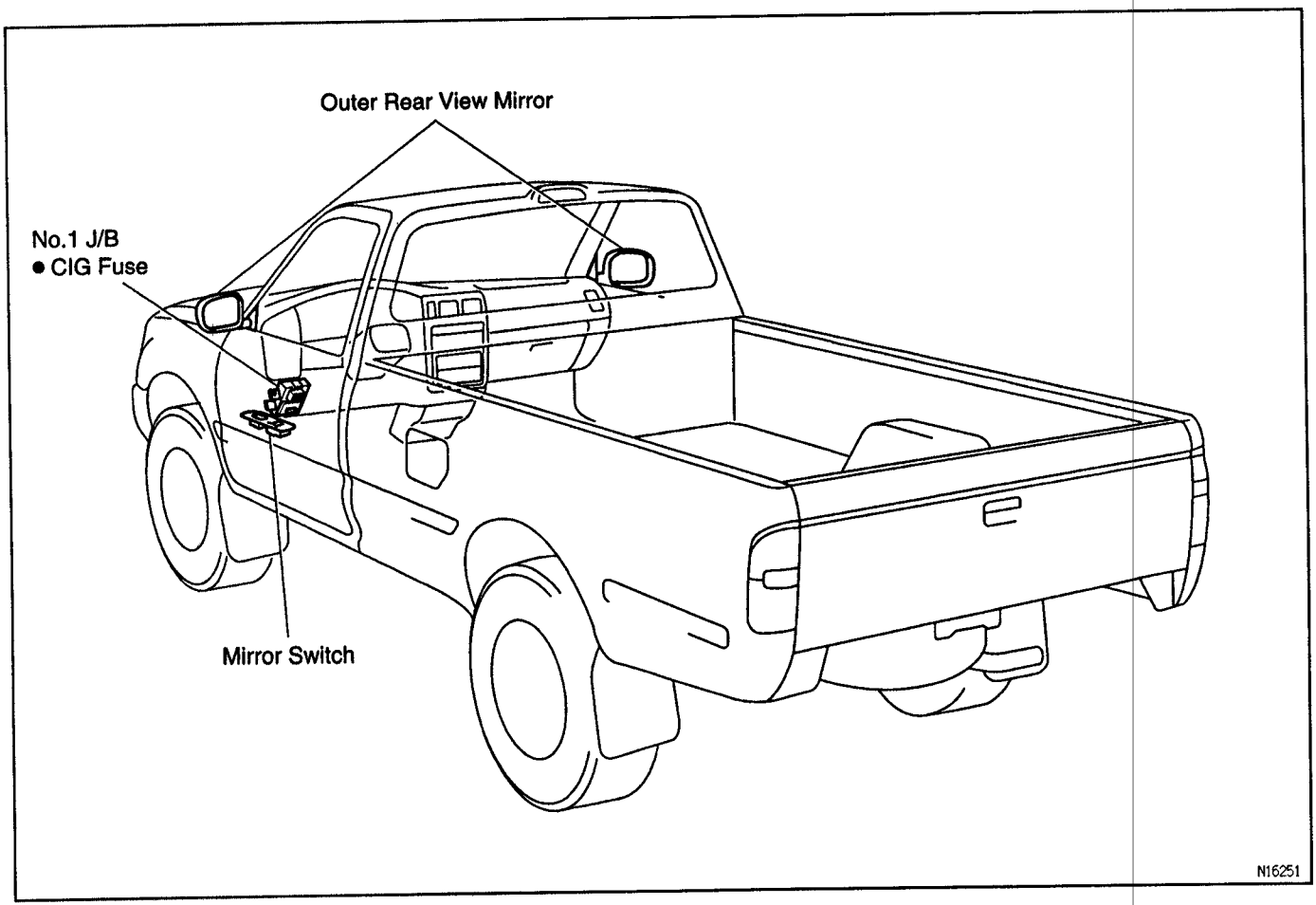

BE

TROUBLESHOOTING

BE028-06

The table below will be useful for you in troubleshooting these electrical problems. The most likely causes of the malfunction are shown in the order of their probability. Inspect each part in the order shown, and replace the part when it is found to be faulty.

Trouble	Parts name	(See page)
Power mirror on each side does not operate at all	1. CIG Fuse (No.1 J/B)	
	2. Mirror Switch	(BE–55)
	3. Mirror Motor (Up/Down or Left/Right Control)	(BE–56)
	4. Wire Harness	
Left or Right power mirror does not operate at all	1. Mirror Switch	(BE–55)
	2. Mirror Motor (Up/Down or Left/Right Control)	(BE–56)
	3. Wire Harness	
Up/Down Control of left or right power mirror does not operate	1. Mirror Motor (Up/Down Control)	(BE–56)
	2. Wire Harness	
Left/Right control of left or right power mirror does not operate	1. Mirror Motor (Left/Right Control)	(BE–56)
	2. Wire Harness	

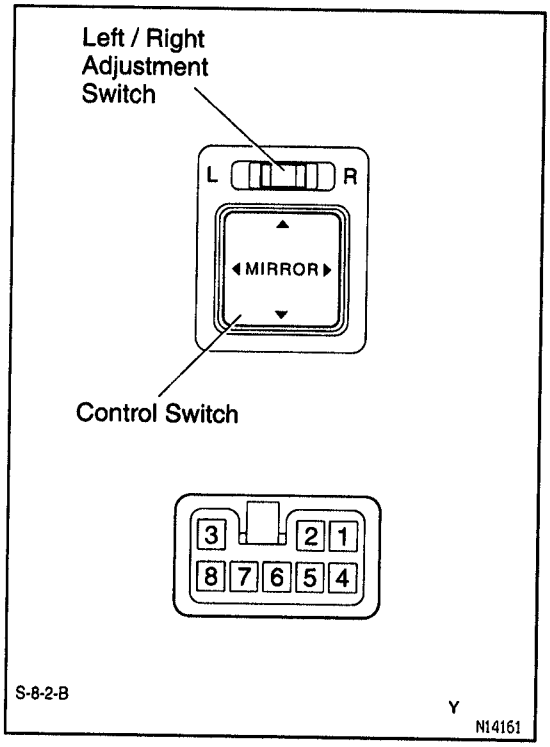

MIRROR SWITCH INSPECTION

BE029-07

INSPECT SWITCH CONTINUITY

Left side:

Switch position	Tester connection	Specified condition
OFF	–	No Continuity
UP	2 – 3, 1 – 7	Continuity
DOWN	1 – 2, 3 – 7	Continuity
LEFT	2 – 3, 1 – 8	Continuity
RIGHT	1 – 2, 3 – 8	Continuity

Right side:

Switch position	Tester connection	Specified condition
OFF	–	No Continuity
UP	2 – 3, 1 – 5	Continuity
DOWN	1 – 2, 3 – 5	Continuity
LEFT	2 – 3, 1 – 6	Continuity
RIGHT	1 – 2, 3 – 6	Continuity

If continuity is not as specified, replace the switch.

BE

BE02A–06

MIRROR MOTOR INSPECTION

INSPECT MOTOR OPERATION

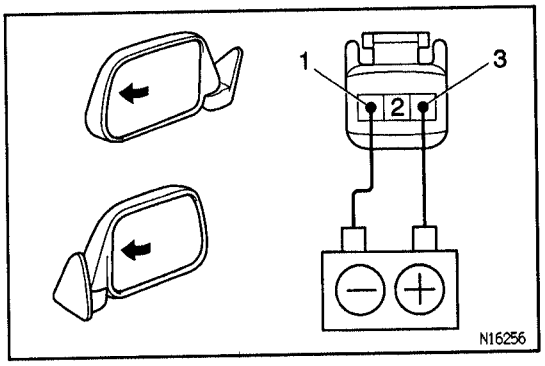

(a) Connect the positive (+) lead from the battery to terminal 3 and negative (−) lead to terminal 1. Check that the mirror turns to left side.

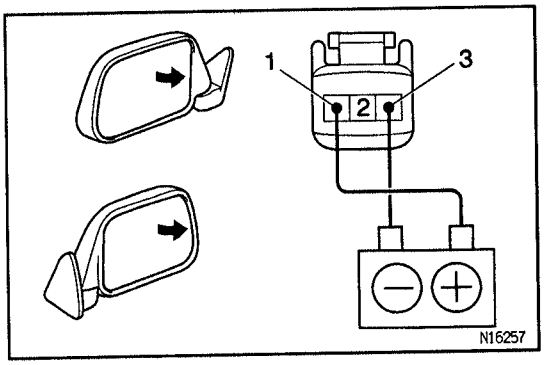

(b) Remove the polarity and check that the mirror turns to right side.

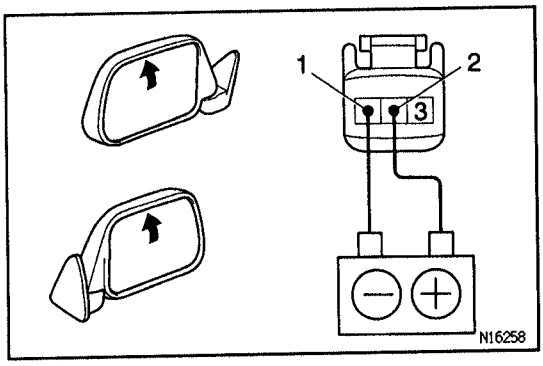

(c) Connect the positive (+) lead from the battery to terminal 2 and the negative (−) lead to terminal 1. Check that the mirror turns upward.

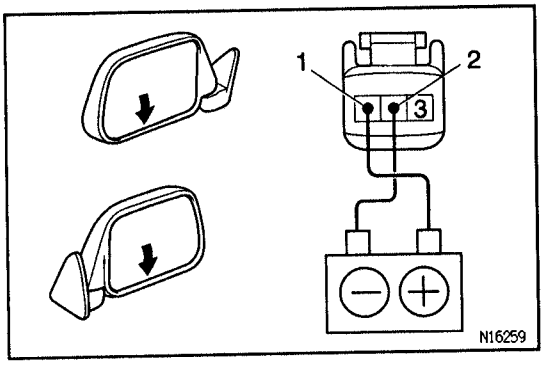

(d) Reverse the polarity, that the mirror turns downward. If operation is not as specified, replace the mirror assembly.

BE

AUDIO SYSTEM
PARTS LOCATION

BE02Q-06

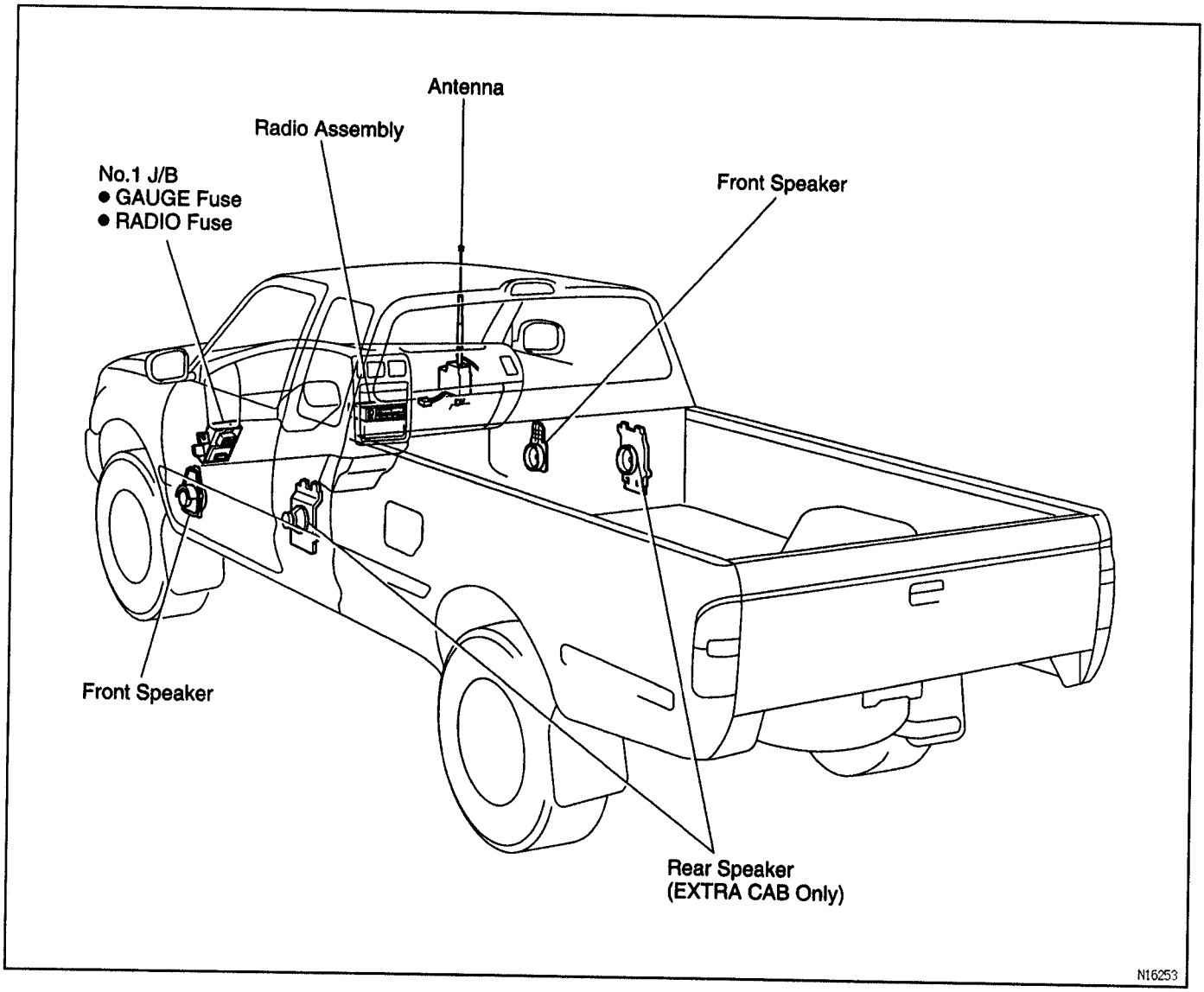

BE1M2-0A

SYSTEM DESCRIPTION

1. RADIO WAVE BAND

The radio wave bands used in radio broadcasting are as follows:

Frequency	30 kHz	300kHz	3 MHz	30 MHz	300 MHz
Designation	LF	MF	HF	VHF	
Radio wave		AM ← →		FM ← →	
Modulation method	Amplitude modulation			Frequency modulation	

LF: low Frequency MF: Medium Frequency HF: High Frequency VHF: Very High Frequency

V03941

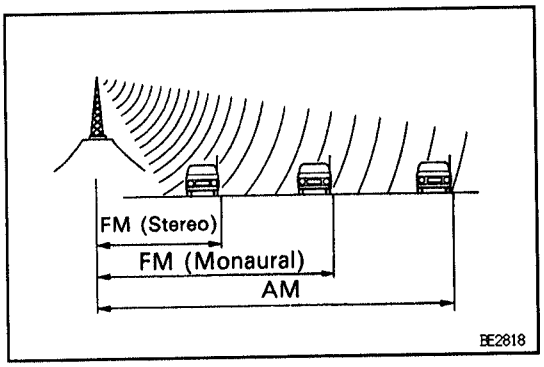

2. SERVICE AREA

There are great differences in the size of the service area for AM, FM monaural, and FM stereo broadcasts cannot be received even though AM comes in very clearly.

Not only does FM stereo have the smallest service area, but it also picks up static and other types of interference ("noise") easily.

3. RECEPTION PROBLEMS

Besides the problem of static, there are also the problems called "fading", "multipath" and "fade out". These problems are caused not by electrical noise but by the nature of the radio waves themselves.

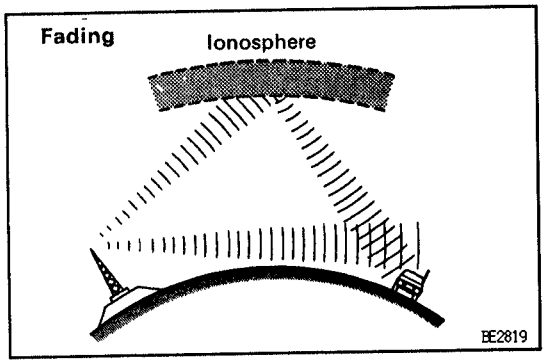

Fading

Besides electrical interference, AM broadcasts are also susceptible to other types of interference, especially at night. This is because AM radio waves bounce off the ionosphere at night. These radio waves then interfere with the signals from the same transmitter that reach the vehicle's antenna directly. This type of interference is called "fading".

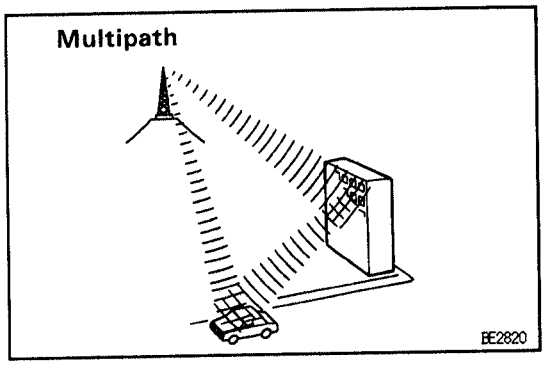

Multipath

One type of interference caused by the bouncing of radio waves off of obstructions is called "multipath". Multipath occurs when a signal from the broadcast transmitter antenna bounces off buildings and mountains and interferes with the signal that is received directly.

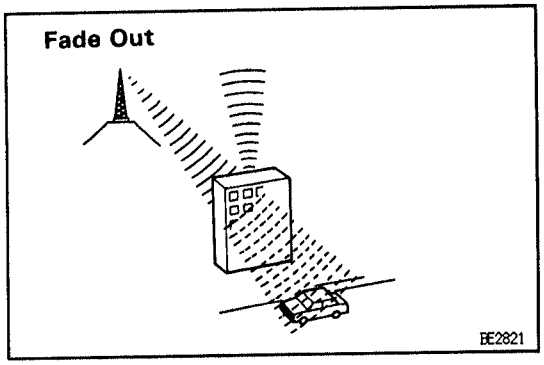

Fade Out

Because FM radio waves are of higher frequencies than AM radio waves, they bounce off buildings, mountains, and other obstructions. For this reason, FM signals often seem to gradually disappear or fade away as the vehicle goes behind a building or other obstruction. This is called "fade out".

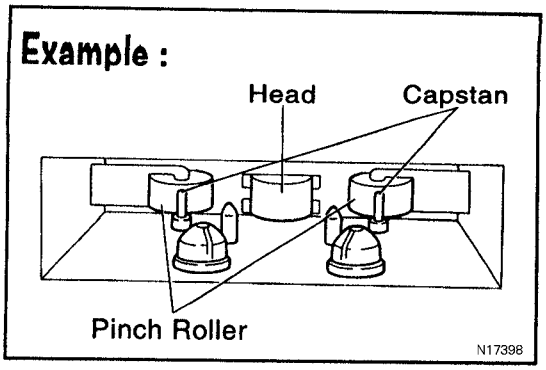

MAINTENANCE

BE2EV-06

Tape Player/Head Cleaning

(a) Raise the cassette door with your finger.
Next using a pencil or similar object, push in the guide.

(b) Using a cleaning pen or cotton applicator soaked in cleaner, clean the head surface, punch rollers and capstans.

TROUBLESHOOTING

BE2EZ-04

NOTICE: When replacing the internal mechanism (computer part) of the audio system, be careful that no part of your body or clothing comes in contact with the terminals of the leads from the IC, etc. of the replacement part (spare part).

HINT: This inspection procedure is a simple troubleshooting which should be carried out on the vehicle during system operation and was prepared on the assumption of system component troubles (except for the wires and connectors, etc.).

Always inspect the trouble taking the following items into consideration.

- Open or short circuit of the wire harness
- Connector or terminal connection fault

	Problem	No.
Radio	No power coming in.	1
	Power coming in, but radio not operating.	2
	Noise present, but AM – FM not operating.	3
	Either speaker does not work.	4
	Either AM or FM does not work.	5
	Reception poor (Volume faint).	5
	Few preset tuning bands.	5
	Sound quality poor.	6
	Cannot set station select button.	7
	Preset memory disappears.	7
Tape Player	Cassette tape cannot be inserted.	8
	Cassette tape inserts, but no power.	9
	Power coming in, but tape player not operating.	10
	Either speaker does not work.	11
	Sound quality poor (Volume faint).	12
	Tape jammed, malfunction with tape speed or auto–reverse.	13
	APS, SKIP, RPT buttons not operating.	14
	Cassette tape will not eject.	15
Antenna	Antenna does not fully extend or fully retract.	16
	Antenna – related.	17
Noise	Noise produced by vibration or shock while driving.	18
	Noise produced when engine starts.	19

The term "AM" includes LW, MW and the term "FM" includes UKW.

HOW TO USE DIAGNOSTIC CHART

1	Radio	NO POWER COMING IN

① [R]: w/o Tape Player [S]: Radio-Tape Player (Separate)
[U]: Radio-Tape Player Unit w/o Power Amplifier [P]: w/ Power Amplifier

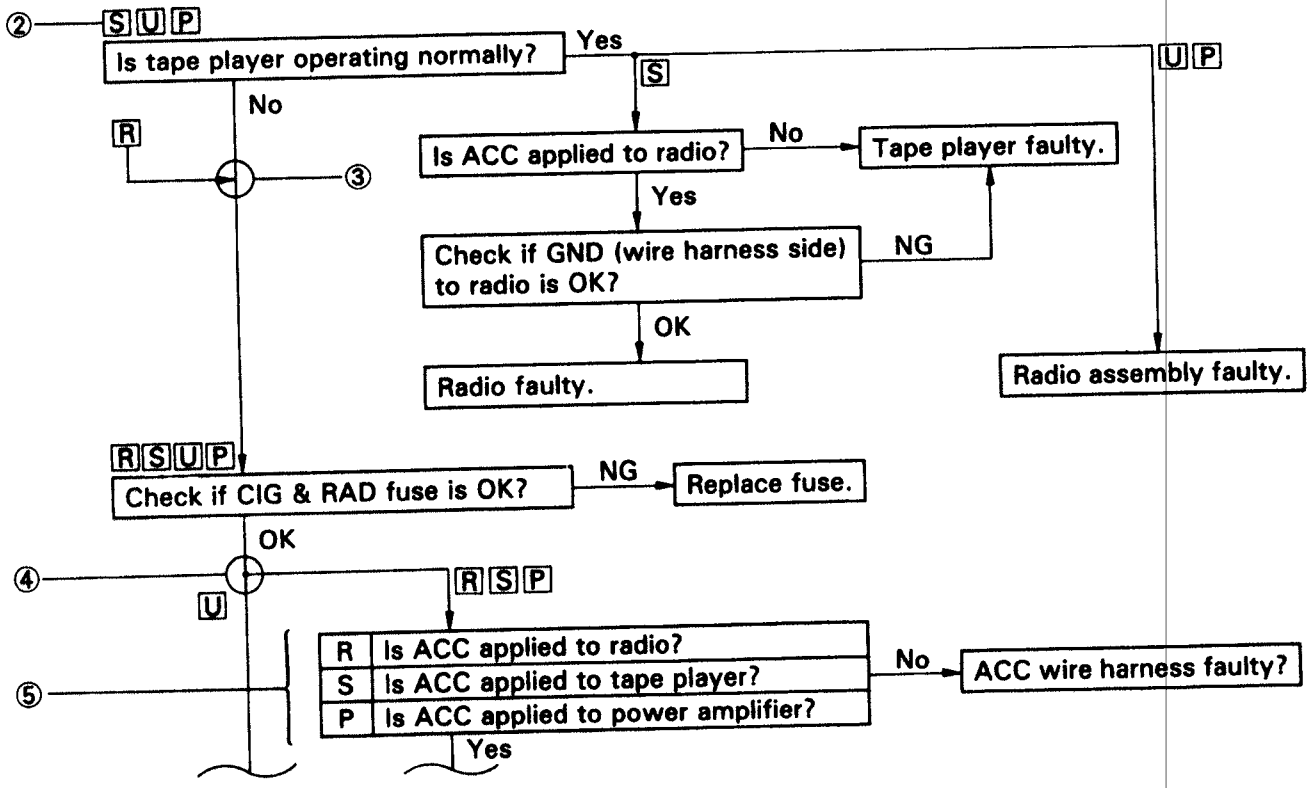

① Audio system type and symbol used.
HINT: Confirm the applicable type of audio system.

② Symbol for type of audio system the question applies to.
HINT: If the audio system type is not applicable, proceed to next question below.

③ Junction without black circle.
HINT: Proceed to next question below.

④ Junction with black circle.
HINT: Proceed to question for applicable audio system type.

⑤ HINT: Select question for applicable audio system type.

BE

V04326

1	Radio	NO POWER COMING IN

[R] : Radio [U] : Radio – Tape Player Unit

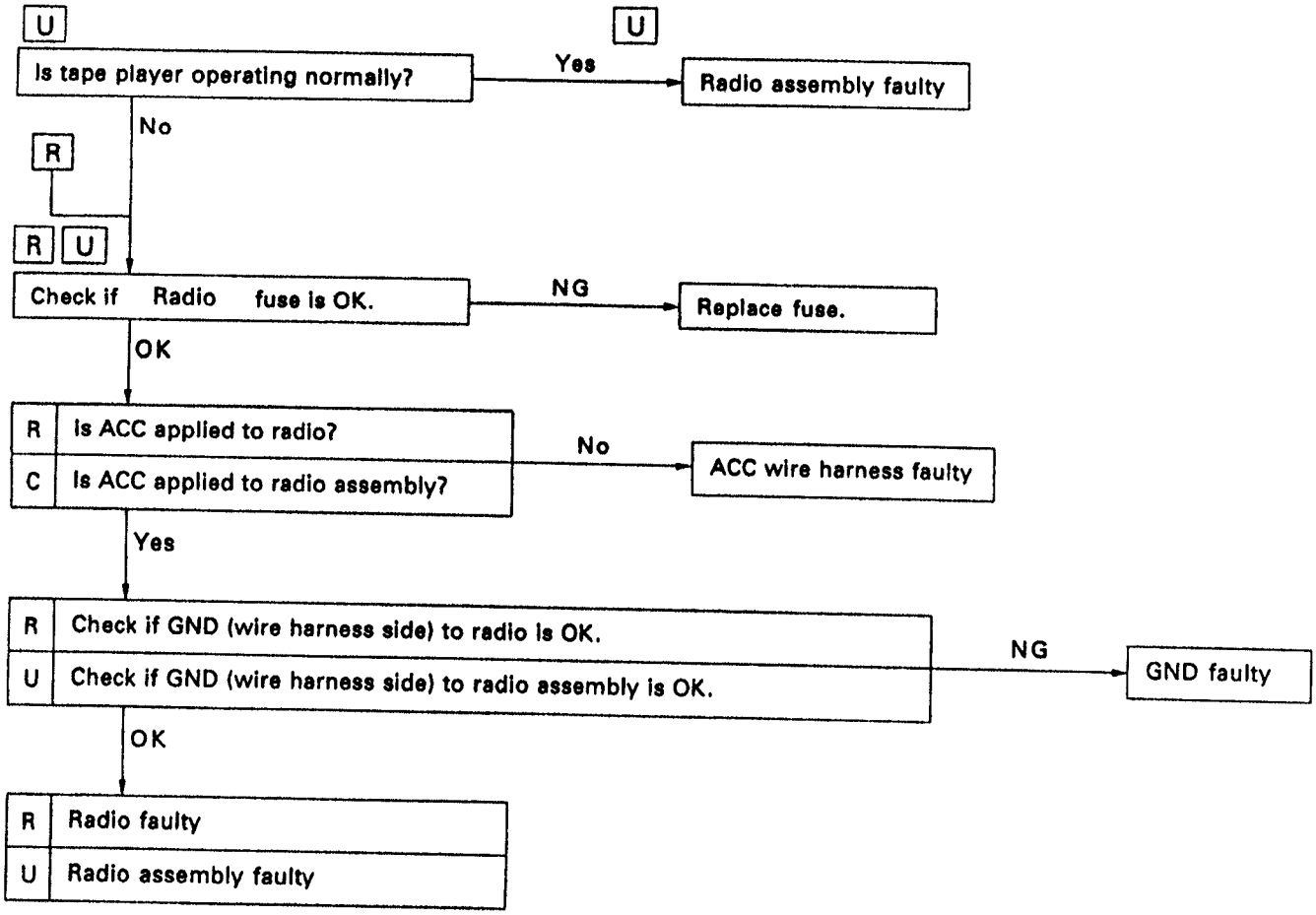

BE

V06321

2 Radio — POWER COMING IN, BUT RADIO NOT OPERATING

[R] : Radio [U] : Radio – Tape Player Unit

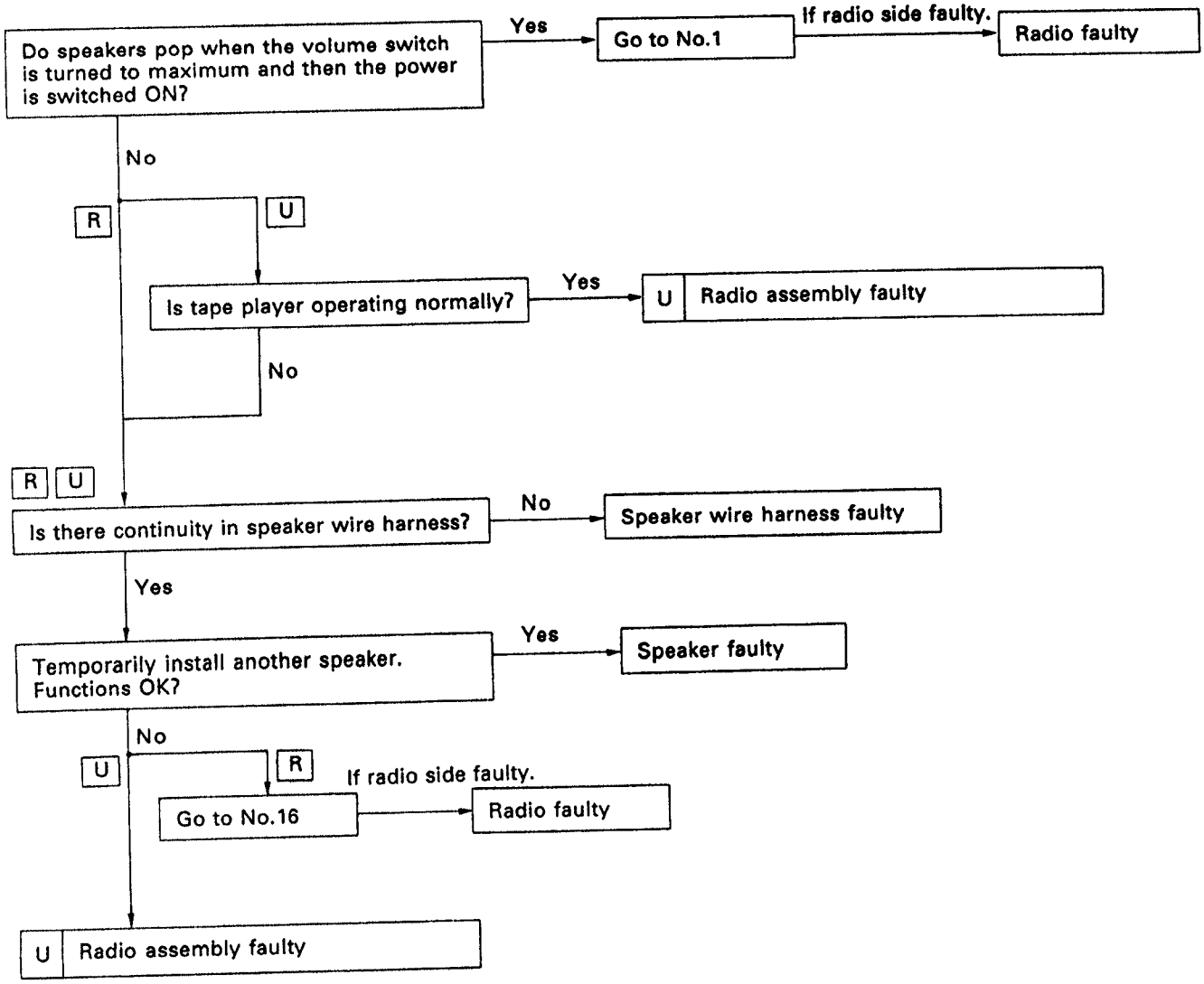

BE

3 Radio — NOISE PRESENT, BUT AM-FM NOT OPERATING

[R] : Radio [U] : Radio – Tape Player Unit

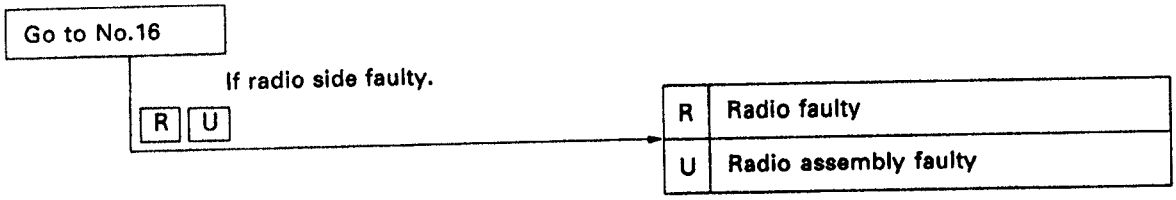

V06322

4	Radio	EITHER SPEAKER DOES NOT WORK

[R] : Radio [U] : Radio – Tape Player Unit

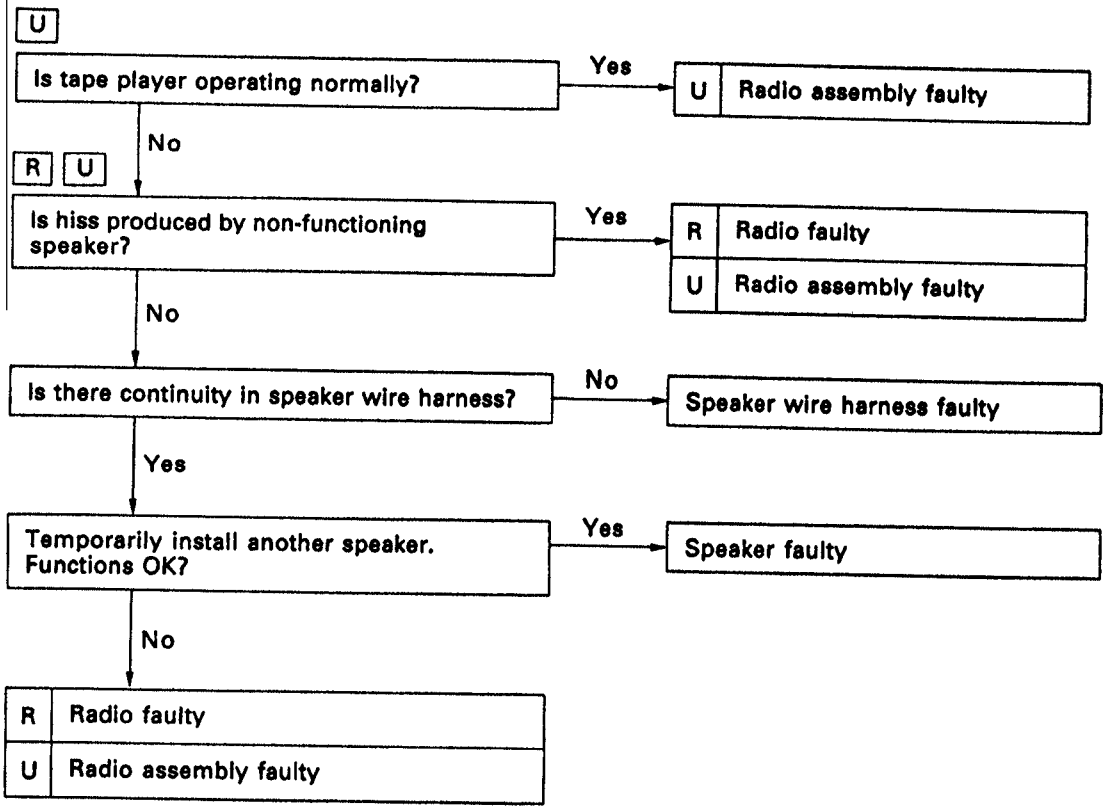

BE

5	Radio	EITHER AM OR FM DOES NOT WORK, RECEPTION POOR (VOLUME FAINT), FEW PRESET TUNING BANDS

[R] : Radio [U] : Radio – Tape Player Unit

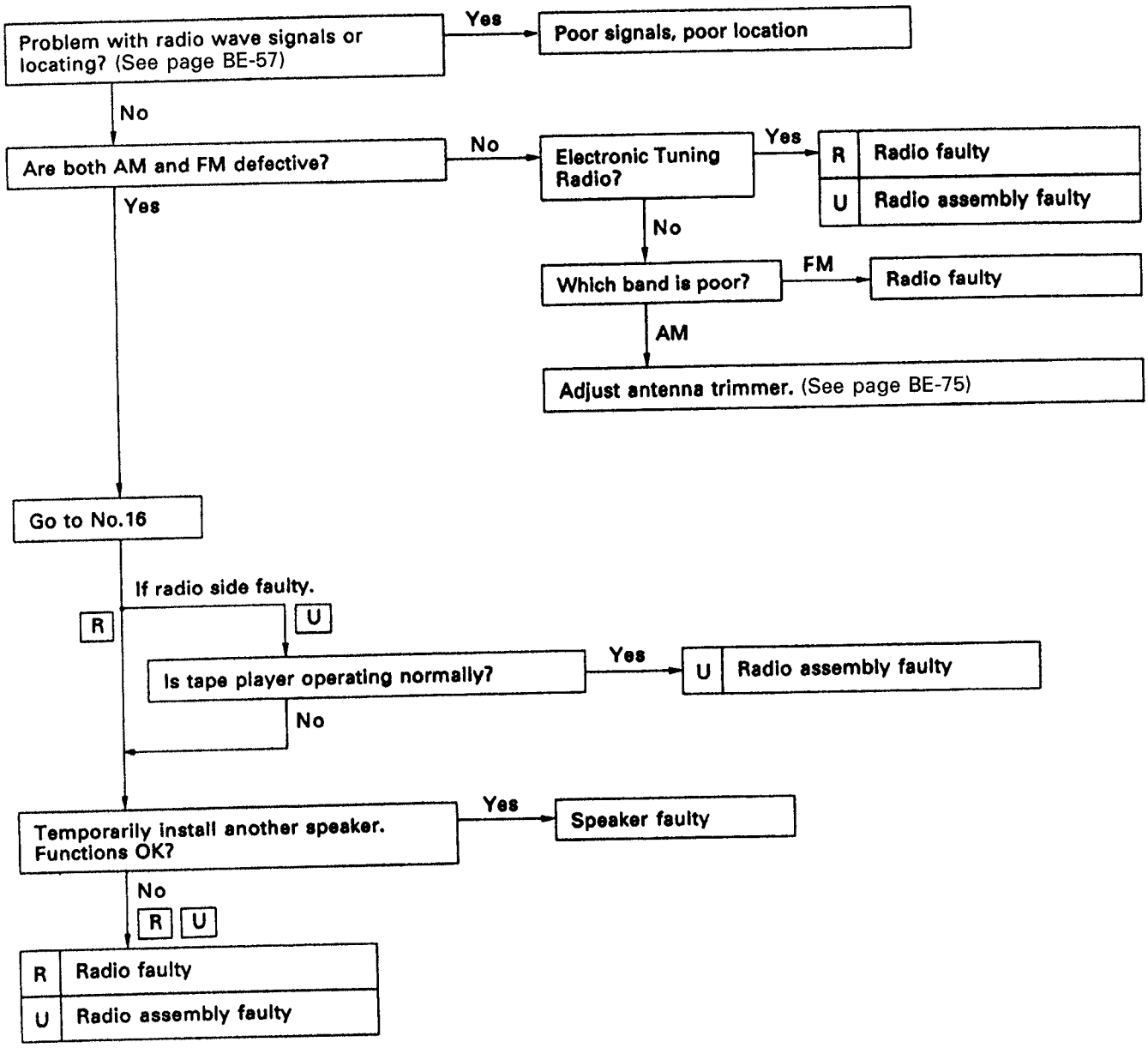

BE

V06324

6 Radio — SOUND QUALITY POOR

[R] : Radio [U] : Radio – Tape Player Unit

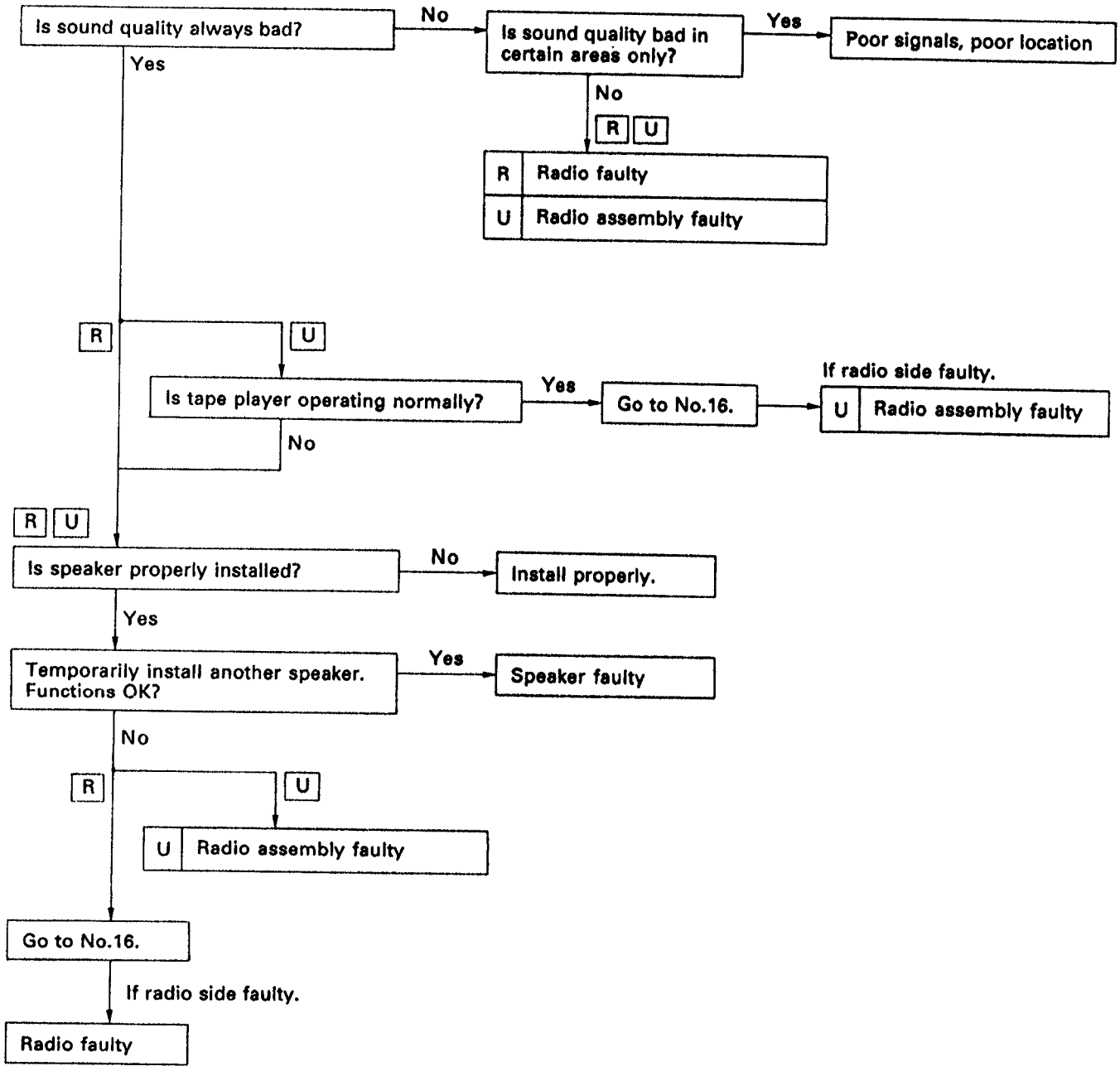

BE

V06325

7 Radio — CANNOT SET STATION SELECT BUTTON, PRESET MEMORY DISAPPEARS

[R] : Radio [U] : Radio – Tape Player Unit

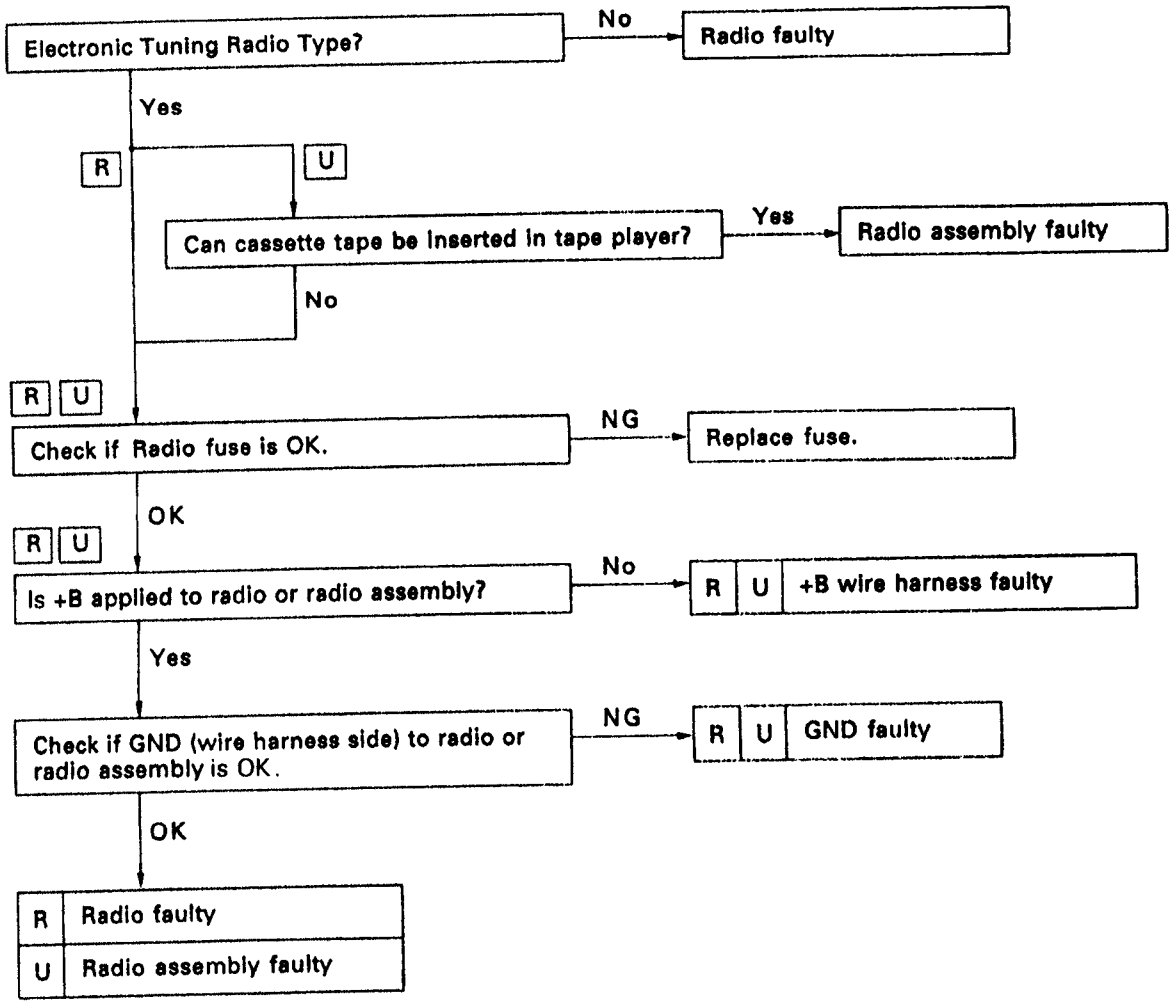

BE

V06326

8 Tape Player — CASSETTE TAPE CANNOT BE INSERTED

U : Radio – Tape Player Unit

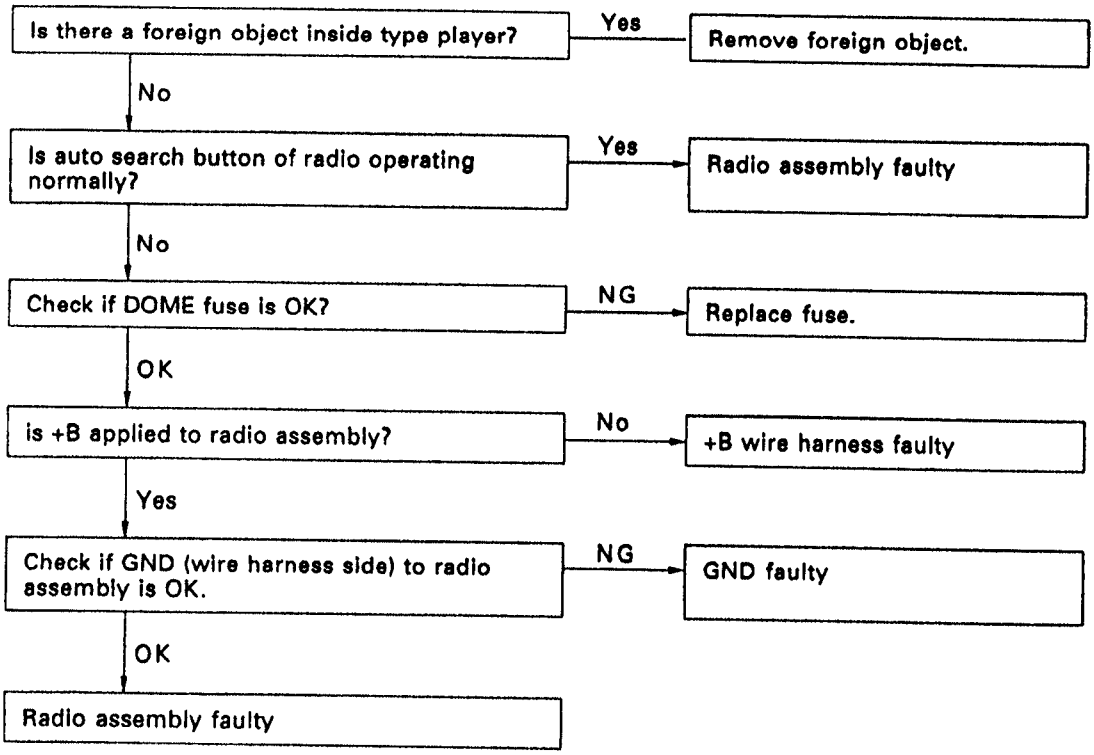

9 Tape Player — CASSETTE TAPE INSERTS, BUT NO POWER

U : Radio – Tape Player Unit

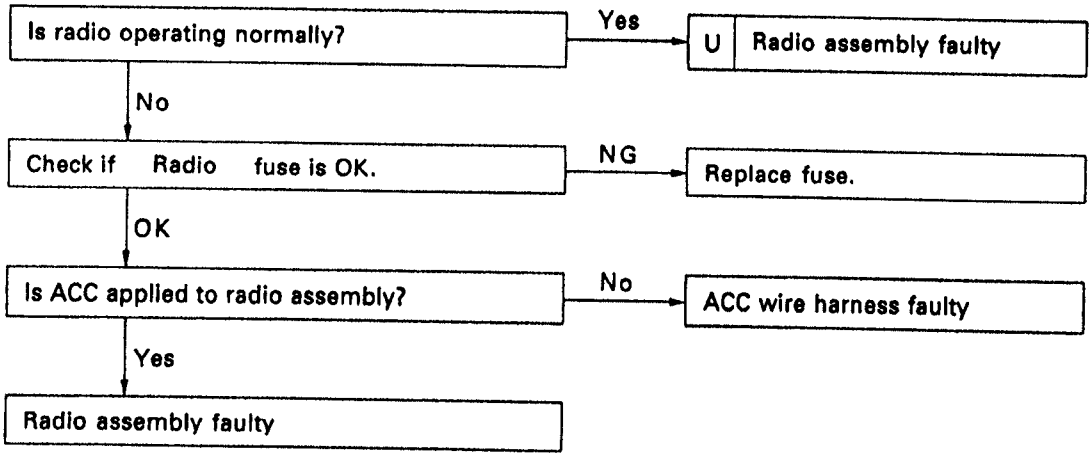

BE

V06327

10 Tape Player — POWER COMING IN, BUT TAPE PLAYER NOT OPERATING

[U] : Radio – Tape Player Unit

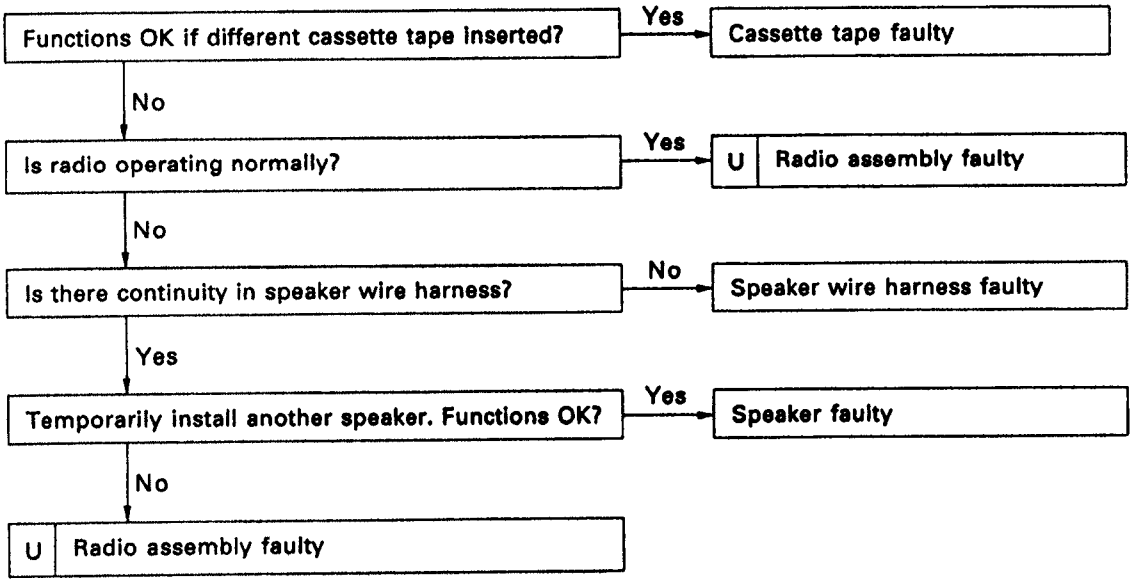

11 Tape Player — EITHER SPEAKER DOES NOT WORK

[U] : Radio – Tape Player Unit

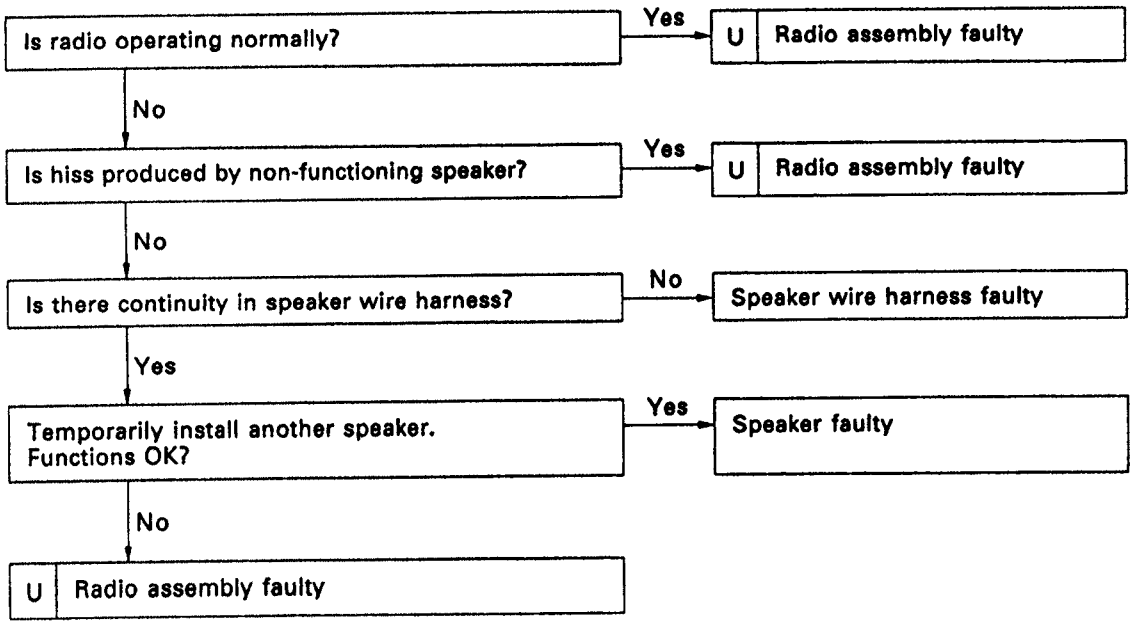

BE

V06328

12 Tape Player — SOUND QUALITY POOR (VOLUME FAINT)

U : Radio – Tape Player Unit

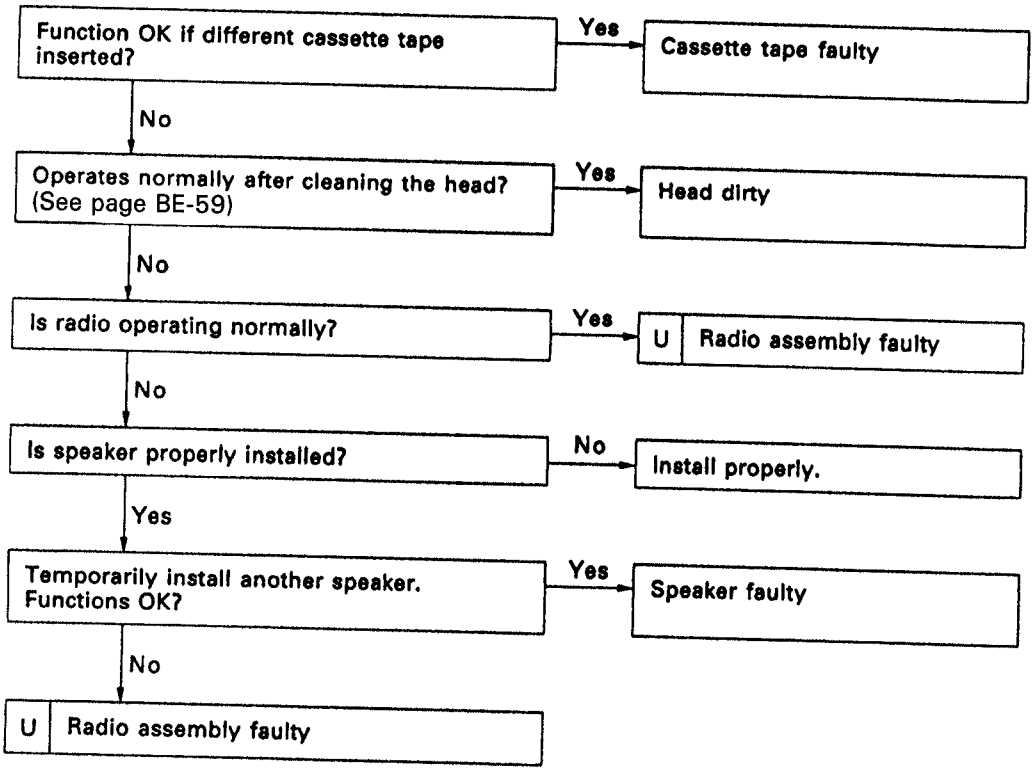

13 Tape Player — TAPE JAMMED, MALFUNCTION WITH TAPE SPEED OR AUTO-REVERSE

U : Radio – Tape Player Unit

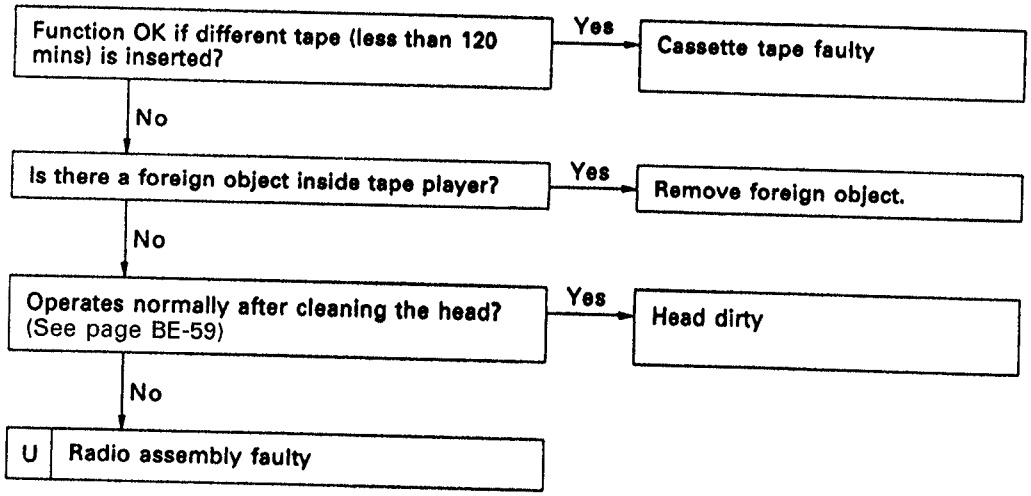

BE

V06329

14 Tape Player — APS, SKIP, RPT BUTTONS NOT OPERATING

Functions OK if different cassette tape inserted? — No → Radio assembly faulty

Yes

Cassette tape faulty (Less than 3 secs. of silence between songs (APS, RPT). Less than 15 secs. of silence (SKIP).)

15 Tape Player — CASSETTE TAPE WILL NOT EJECT

[U] : Radio – Tape Player Unit

Is tape player operating normally? — No → Cassette tape jammed

Yes

Is auto search button of radio operating normally? — Yes → Radio assembly faulty

No

Check if Radio fuse is OK. — NG → Replace fuse.

OK

Is +B applied to radio assembly? — No → +B wire harness faulty

Yes

Radio assembly faulty

BE

V06330

16 Antenna — ANTENNA DOES NOT FULLY EXTENDED OR FULLY RETRACT

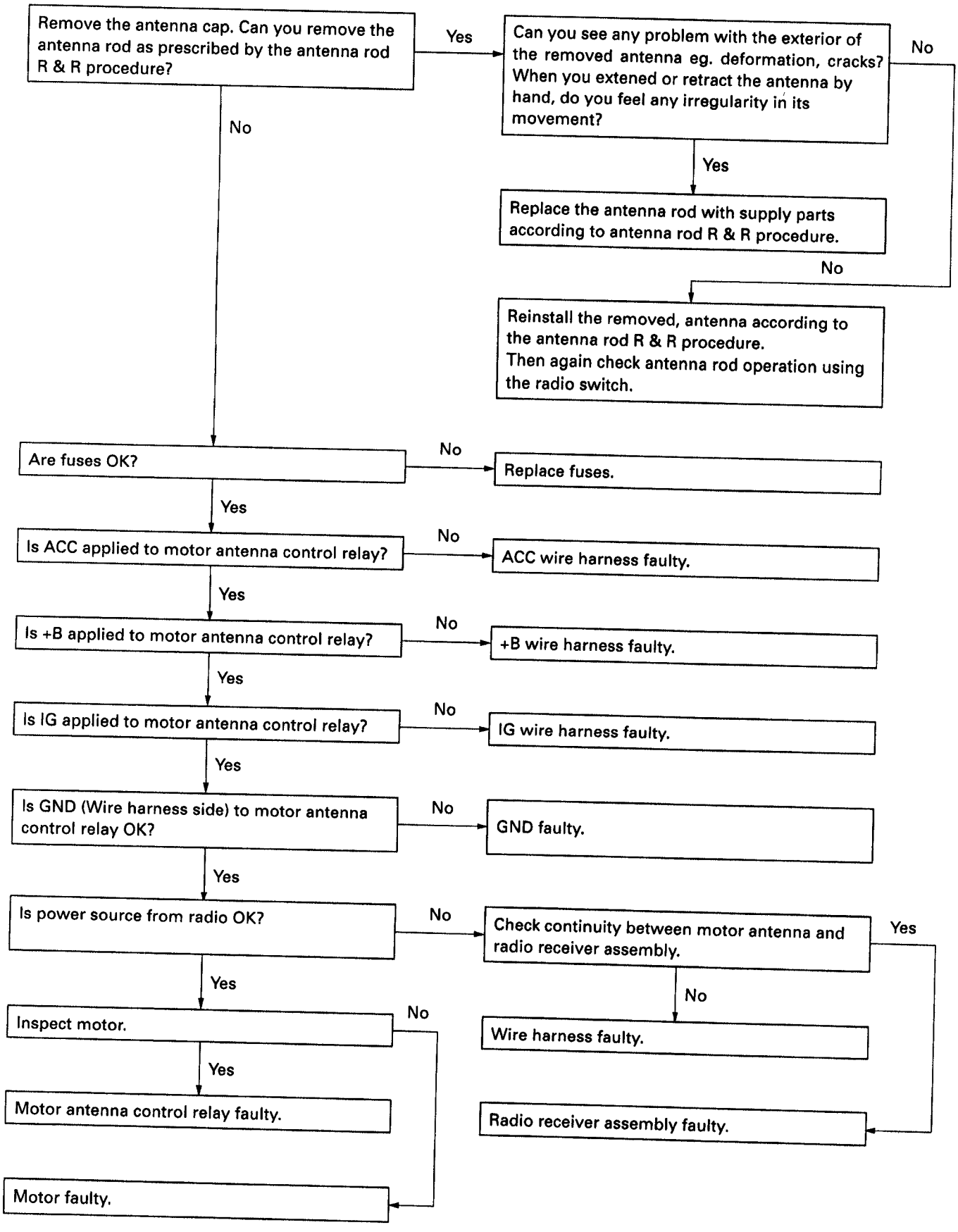

V06259

BE

17	Antenna	ANTENNA-RELATED

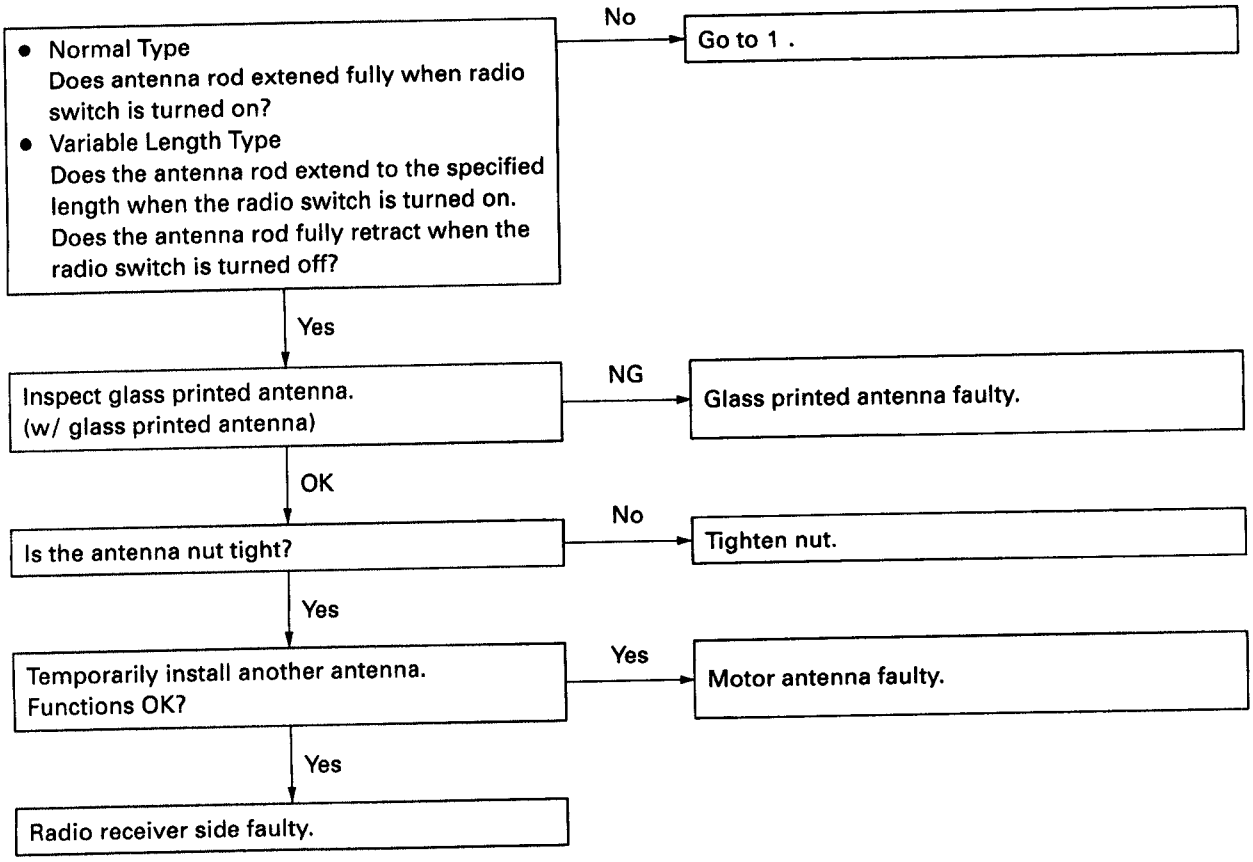

V06260

18	Noise	NOISE PRODUCED BY VIBRATION OR SHOCK WHILE DRIVING

BE

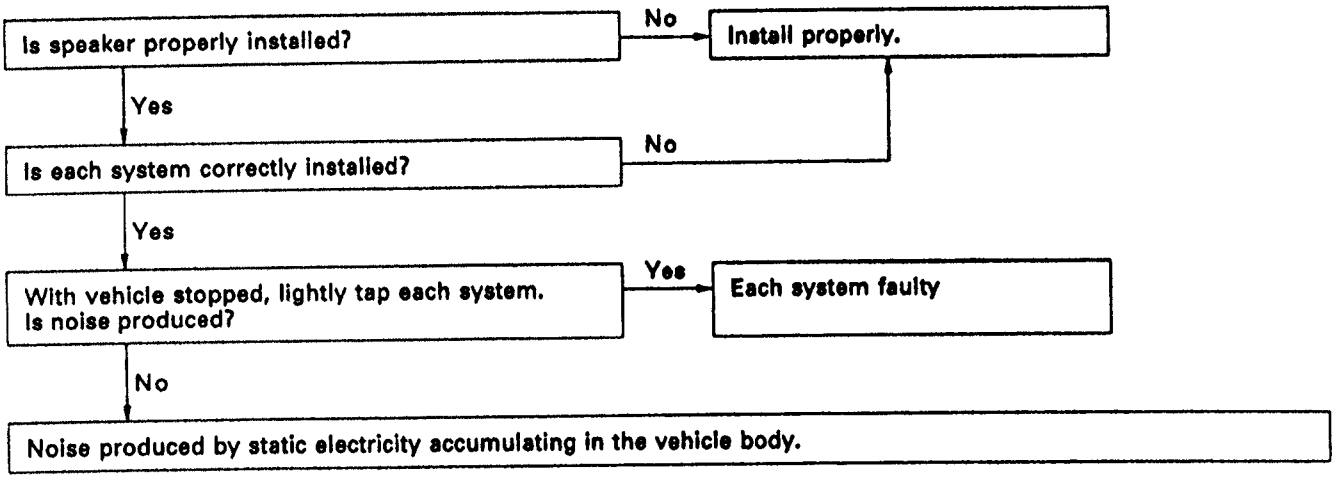

V06331

19	Noise	NOISE PRODUCED WHEN ENGINE STARTS

Whistling noise which becomes high-pitched when accelerator strongly depressed, disappears shortly after engine stops. → Yes → Generator noise

↓ No

Whining noise occurs when A/C is operating. → Yes → A/C noise

↓ No

Scratching noise occurs during sudden acceleration, driving on rough roads or when ignition switch is turned on. → Yes → Fuel gauge noise

↓ No

Clicking sound heard when horn button is pressed, then released. Whirring/grating sound when pushed continuously. → Yes → Horn noise

↓ No

Murmuring sound stops when engine stops. → Yes → Ignition noise

↓ No

Tick-tock noise, occurs in co-ordination with blinking of flasher. → Yes → Turn signal noise

↓ No

Noise occurs during window washer operation. → Yes → Washer noise

↓ No

Scratching noise occurs while engine is running, continues a while even after engine stops. → Yes → Water temp. gauge noise

↓ No

Scraping noise in time with wiper beat. → Yes → Wiper noise

↓ No

Other type of noise

BE

V06332

BE2LJ-02

ANTENNA MOTOR INSPECTION

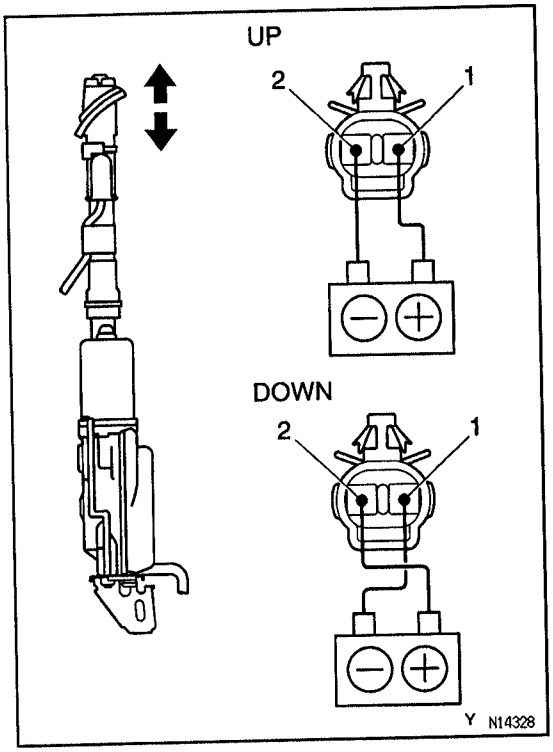

INSPECT MOTOR OPERATION

(a) Connect the positive (+) lead from battery to terminal 1 and the negative (–) lead to terminal 2.

(b) Check that the motor turns (moves upward).

NOTICE: These tests must be performed quickly (within 3 – 5 seconds) to prevent the coil from burning out.

(c) Then, reverse the polarity, check that the motor turns the opposite way (moves downward).

NOTICE: These tests must be performed quickly (within 3 – 5 seconds) to prevent the coil from burning out.

BE2LK-02

ANTENNA MOTOR CONTROL RELAY INSPECTION

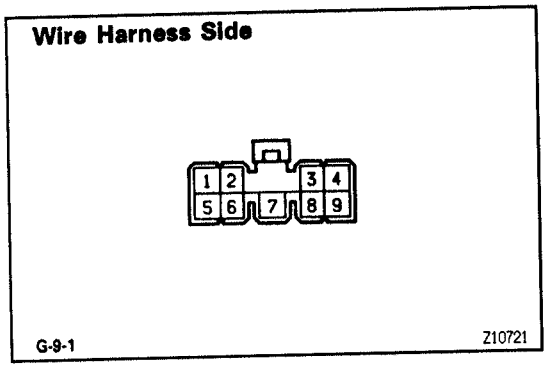

INSPECT RELAY CIRCUIT

Disconnect the connector from the relay and inspect the connector on wire harness side, as shown in the chart.

If circuit is as specified, replace the relay.

Tester connection	Condition	Specified condition
1 – 4	Constant	Continuity
3 – Ground	Constant	Continuity
2 – Ground	Constant	Battery positive voltage
5 – Ground	Ignition switch position LOCK or ACC	No voltage
5 – Ground	Ignition switch position ON	Battery positive voltage
6 – Ground	Ignition switch position LOCK	No voltage
6 – Ground	Ignition switch position ACC or ON Radio switch and cassette OFF	No voltage
6 – Ground	Ignition switch position ACC or ON Radio switch of cassette ON	Battery positive voltage
8 – Ground	Ignition switch position LOCK	No voltage
8 – Ground	Ignition switch position ACC or ON Radio switch OFF or cassette ON	No voltage
8 – Ground	Ignition switch position ACC or ON Radio switch ON and cassette OFF	Battery positive voltage
9 – Ground	Ignition switch position LOCK	No voltage
9 – Ground	Ignition switch position ACC or ON	Battery positive voltage

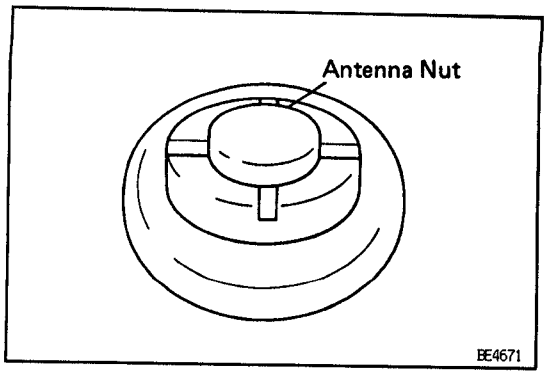

ANTENNA ROD REMOVAL AND INSTALLATION

BE2LL-02

1. REMOVE ANTENNA ROD

HINT: Perform this operation with the negative (–) cable connected to the battery terminal.

(a) Turn the ignition switch to "LOCK" position.

(b) Remove the antenna nut.

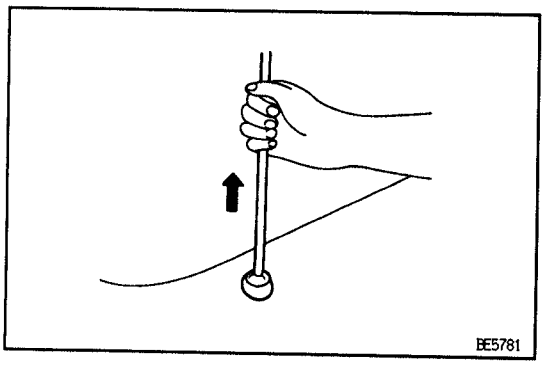

(c) Press the "AM" button on the radio receiver, and simultaneously turn the ignition switch to "ACC" position.

HINT:

- The rod will extend fully and be released from the motor antenna.
- After removing the antenna rod, leave the ignition switch as "ACC".

NOTICE: To prevent body damage when the antenna rod is released, hold the rod while it comes out.

2. INSTALL ANTENNA ROD

(a) Insert the cable of the rod until it reaches the bottom.

HINT: When inserting the cable, the teeth on the cable must face toward the front of the vehicle.

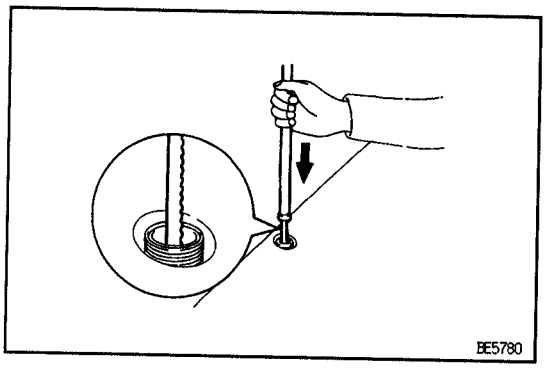

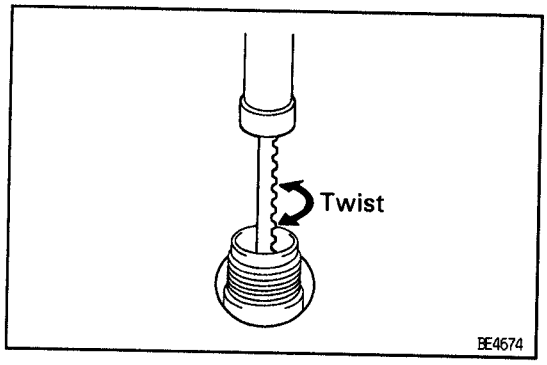

(b) Wind the cable to retract the rod by turning the ignition switch to "LOCK" position.

HINT:

- In case the cable is not wound, twist it as shown in the illustration.
- Even if the rod has not retracted fully, install the antenna nut and inspect the antenna rod operation. It will finally retract fully.

(c) Inspect the antenna rod operation by pushing the radio wave band select buttons.

CLOCK

TROUBLESHOOTING

BE02V-05

HINT: Troubleshoot the clock according to the table below.

Clock will not operate	1
Clock loses or gains time	2

± 1.5 seconds / day

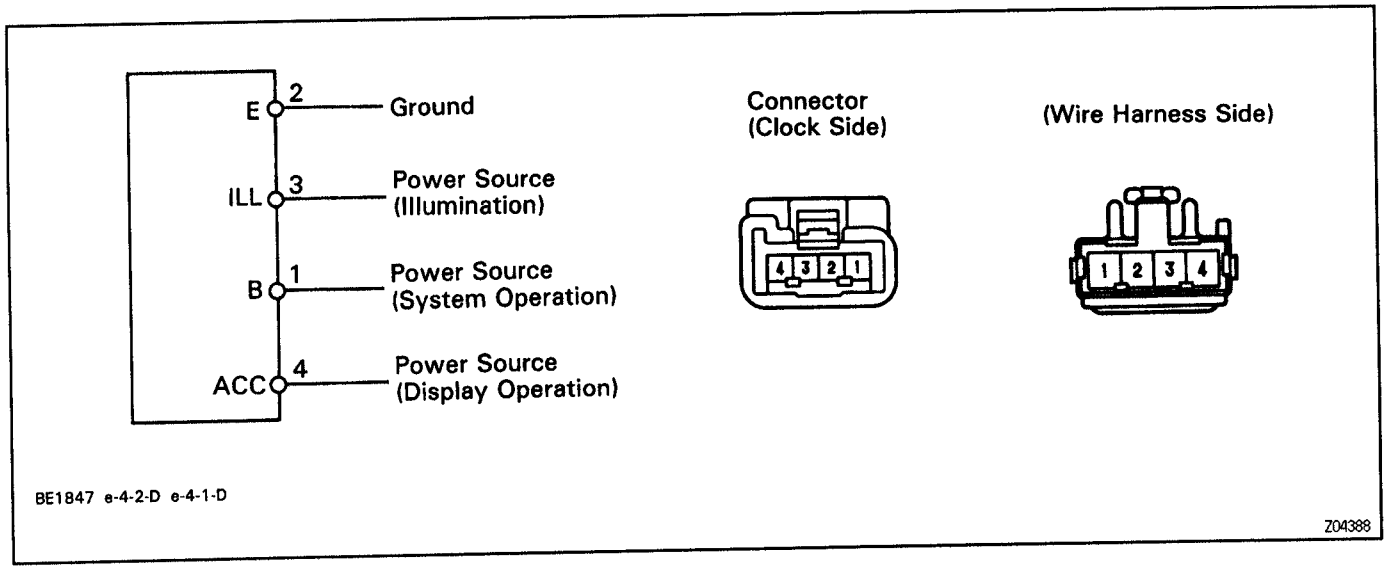

1 CLOCK WILL NOT OPERATE

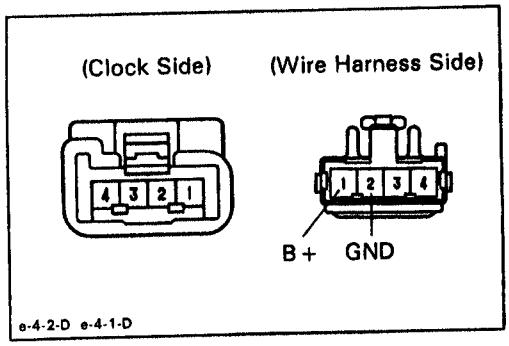

(a) Check that the battery positive voltage is 10 — 16 V.
If voltage is not as specified, replace the battery.

(b) Check that the DOME fuse is not blown.
If the fuse is blown, replace the fuse and check for short.

(c) Troubleshoot the clock as follows.
HINT: Inspect the connector on the wire harness side.

BE

Is there battery positive voltage between terminal B+ and body ground?
- No → Open or short circuit in wire harness between terminal B+ and DOME fuse.
- Yes ↓

Is there continuity between terminal GND and body ground?
- No → Open circuit in wire harness between terminal GND and body ground.
- Yes ↓

Replace clock.

V04421

2 CLOCK LOSES OR GAINS TIME

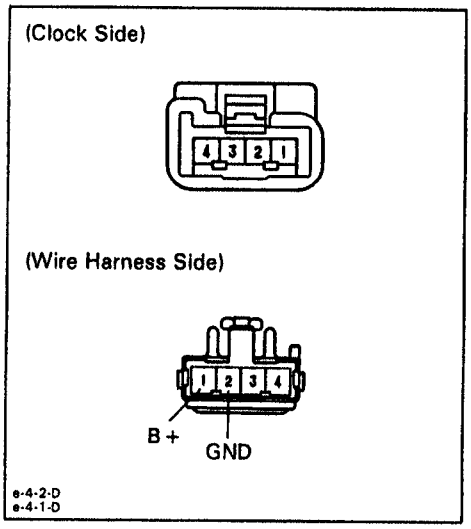

(a) Check that the battery positive voltage is 10 — 16 V.
If voltage is not as specified, replace the battery.

(b) Inspect the error of the clock.
Allowable error (per day): ± 1.5 seconds
If the error exceeds the allowable error, replace the clock.

(c) Check that the clock adjusting button is sticking in position and has failed to return.
If the button is not returned, repair or replace the clock.

(d) Troubleshoot the clock as follows.
HINT: Inspect the connector on the wire harness side.

Is there 10 — 16 V between terminal B+ and body ground?

Below 10 V → Locate cause and repair, or recharge battery.

Yes

Adjust or replace clock.

V04422

CRUISE CONTROL SYSTEM

HOW TO PROCEED WITH TROUBLESHOOTING ..... BE– 79
CUSTOMER PROBLEM ANALYSIS ..... BE– 80
DIAGNOSIS SYSTEM ..... BE– 81
DTC CHART ..... BE– 83
INPUT SIGNAL CHECK ..... BE– 84
PARTS LOCATION ..... BE– 85
STANDARD VALUE OF ECU TERMINAL ... BE– 86
MATRIX CHART OF PROBLEM SYMPTOMS ..... BE– 88
CIRCUIT INSPECTION
- DTC. Code 11, 14 Actuator Motor Circuit ..... BE– 89
- DTC. Code 12 Actuator Magnetic Clutch Circuit ..... BE– 91
- DTC. Code 13, 14 Actuator Position Sensor Circuit ..... BE– 93
- DTC. Code 21, 23 Vehicle Speed Sensor Circuit ..... BE– 96
- DTC. Code 32, 34 Control Switch Circuit ..... BE– 97
- Stop Light Switch Circuit BE–100
- Idle Switch Circuit BE–102
- Electronically Controlled Transmission Communication Circuit BE–104
- Park/Neutral Position Switch Circuit BE–107
- Clutch Switch Circuit BE–109
- ECU Power Source Circuit BE–110
- Back-up Power Source Circuit BE–112
- Main Switch Circuit BE–114
- Tc Circuit BE–116

ACTUATOR CONTROL CABLE INSPECTION BE–117

HOW TO PROCEED WITH TROUBLESHOOTING

Perform troubleshooting in accordance with the procedure on the following page.

Items inside // are titles of pages in this manual, with the page number indicated in the bottom portion.
See the indicated pages for detailed explanations.

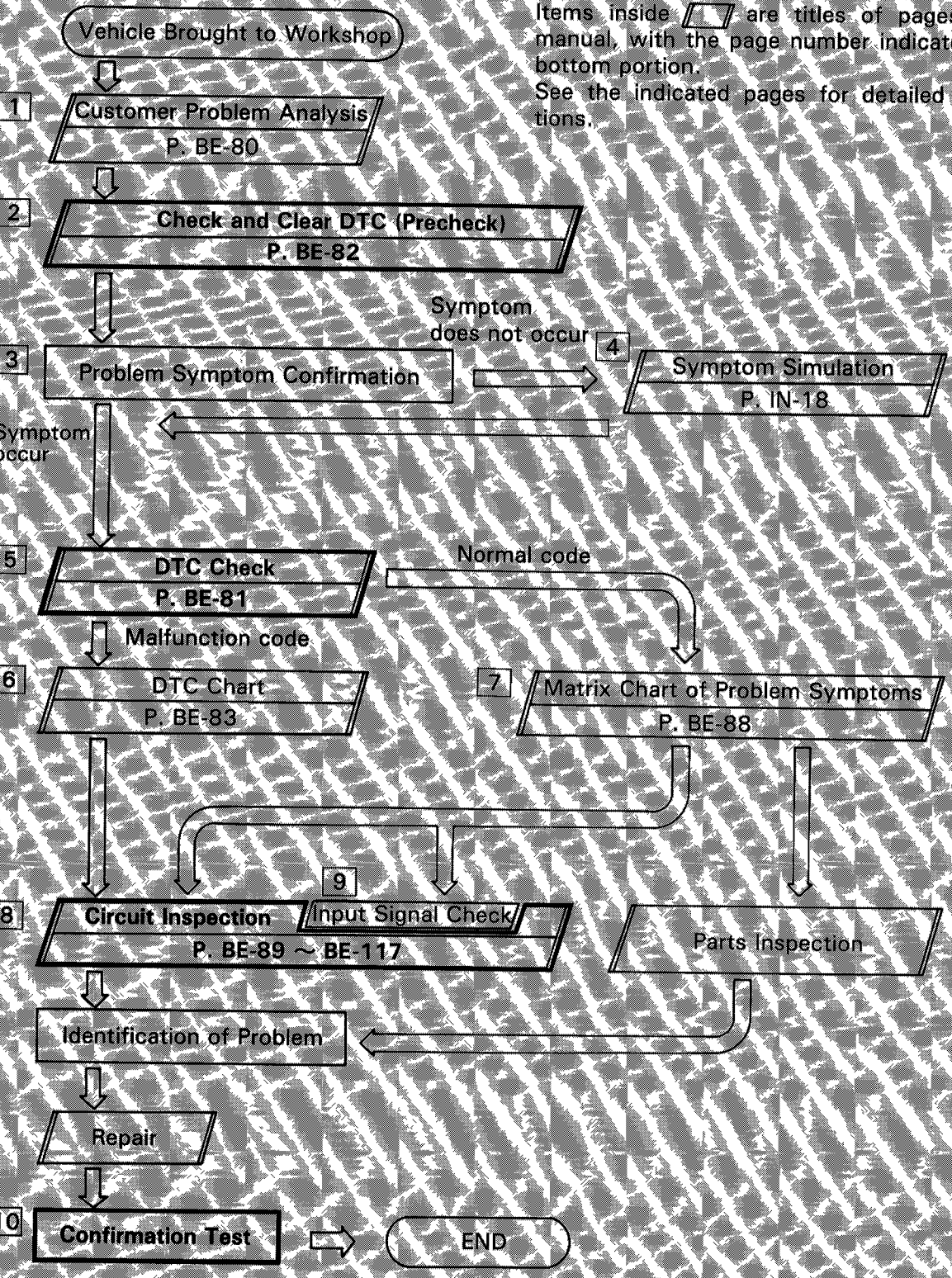

Step 2 , 5 , 8 , 10 : Diagnostic steps permitting the use of the TOYOTA hand-held tester or TOYOTA break-out-box.

BE

CUSTOMER PROBLEM ANALYSIS

CRUISE CONTROL Check Sheet

Inspector's Name :

Customer's Name		**Registration No.**	
		Registration Year	/ /
		Frame No.	
Date Vehicle Brought In	/ /	**Odometer Reading**	km miles

Date Problem First Occurred	/ /
How Often Does Problem Occur?	☐ Continuous ☐ Intermittent (Times a day)
Vehicle Speed When Problem Occurred	km/h mph

Symptoms	☐ Auto cancel occurs	• Driving condition ☐ City driving ☐ Free way ☐ Up hill ☐ Down hill • After cancel occurred, did the driver activate cruise control again ? ☐ Yes ☐ No
	☐ Cancel does not occur	☐ With brake ON ☐ Except D position shift ☐ At about 40 km/h (25 mph) or less ☐ When control SW turns to CANCEL position
	☐ Cruise control malfunction	☐ Vehicle speed increases ☐ Vehicle speed decreases ☐ Hunting occurs ☐ O/D cut off does not occur ☐ O/D does not return
	☐ Switch malfunction	☐ SET ☐ ACCEL. ☐ COAST ☐ RESUME ☐ CANCEL
	☐ Faulty CRUISE MAIN indicator light	☐ Remains ON ☐ Does not light up ☐ Blinking

Diagnostic Trouble Code Check	1st Time	☐ Normal Code ☐ Malfunction Code (Code)
	2nd Time	☐ Normal Code ☐ Malfunction Code (Code)

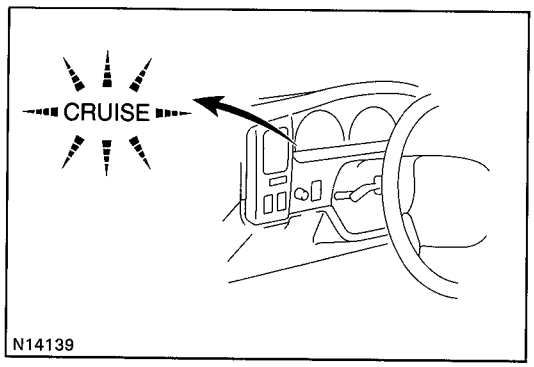

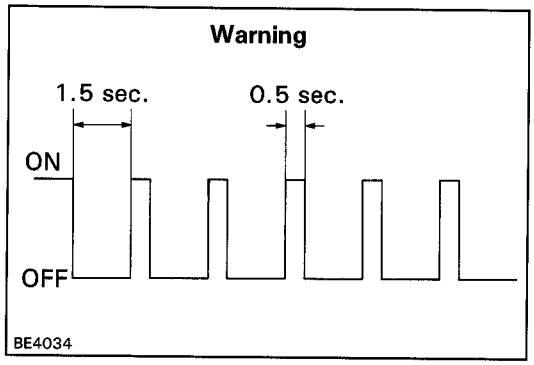

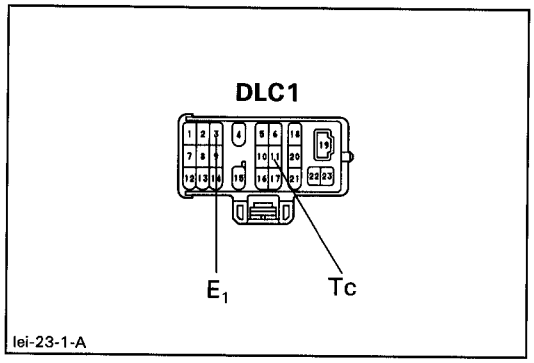

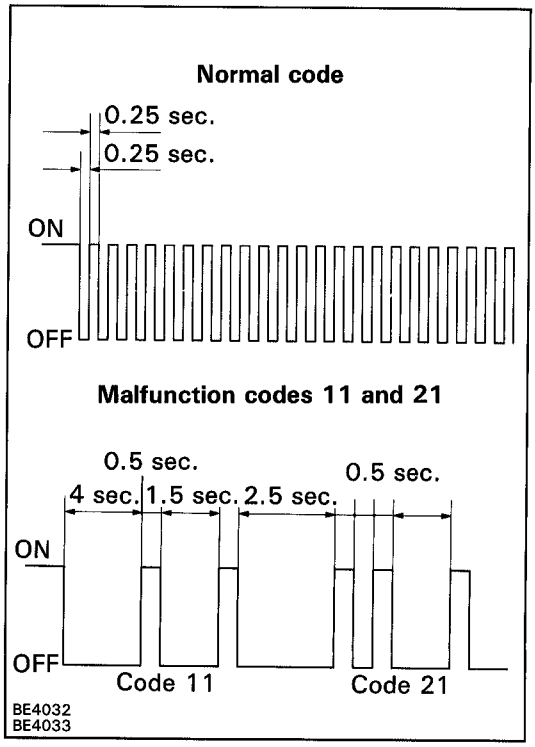

DIAGNOSIS SYSTEM

INDICATOR CHECK

1. Turn the ignition switch ON.
2. Check that the CRUISE MAIN indicator light comes on when the cruise control main switch is turned ON, and that the indicator light goes off when the main switch is turned OFF.

   HINT: If the indicator check result is not normal, proceed to troubleshooting (See page BE-33) for the combination meter section.

DTC CHECK

HINT: If a malfunction occurs in the vehicle speed sensors of actuator, etc. during cruise control driving, the ECU actuates AUTO CANCEL of the cruise control and blinks the CRUISE MAIN indicator light to inform the driver of a malfunction. At the same time, the malfunction is stored in memory as a DTC.

Output of DTC

1. Turn the ignition switch ON.
2. Using SST, connect terminals Tc and E_1 of DLC 1.
   SST 09843 – 18020
3. Read the DTC on the CRUISE MAIN indicator light.
   HINT: If the DTC is not output, inspect the diagnosis circuit (See page BE-114).
   As an example, the blinking patterns for codes; normal, 11 and 21 are shown in the illustration.
4. Check for the problem using the DTC table on the next page.
5. After completing the check, disconnect termianls Tc and E_1, and turn off the display.

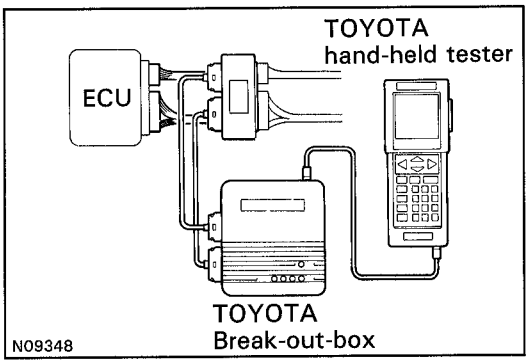

ECU TERMINAL VALUES MEASUREMENT USING TOYOTA BREAK-OUT-BOX AND TOYOTA HAND-HELD TESTER

(a) Hook up the TOYOTA break-out-box and TOYOTA hand-held tester to the vehicle.

(b) Read the ECU input/output values by following the prompts on the scan tool screen.

HINT: TOYOTA hand-held tester has a "Snapshot" function.
This records the measured values and is effective in the diagnosis of intermittent problems.
Please refer to the TOYOTA hand-held tester/TOYOTA break-out-box operator's manual for further details.

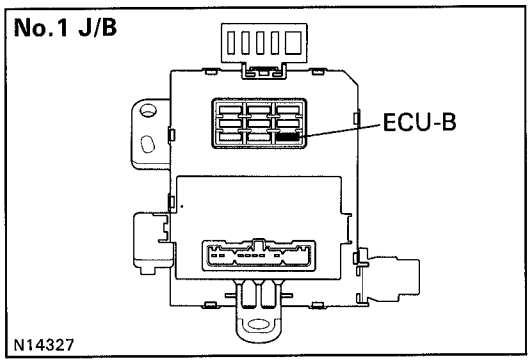

DTC CLEARANCE

1. After completing repairs, the DTC retained in memory can be cleared by removing the ECU-B fuse for 10 seconds or more, with the ignition switch off.
2. Check that the normal code is displayed after connecting the fuse.

DTC CHART

If a malfunction code is displayed during the DTC check, check the circuit listed for that code in the table below and proceed to the appropriate page.

DTC No. (See page)	Detection Item	Trouble Area
—	• Normal	—
11 (BE-89)	• Actuator Motor Circuit	• Cruise control actuator motor • Harness or connector between actuator motor and Cruise Control ECU • Cruise Control ECU
12 (BE-91)	• Actuator Magnetic Clutch Circuit	• Cruise control magnetic clutch • Harness or connector between Cruise Control ECU and magnetic clutch and body ground • Cruise Control ECU
13 (BE-93)	• Actuator Position Sensor Circuit • Open in STOP Fuse	• Cruise control actuator motor • Cruise control actuator position sensor • Harness or connector between actuator position sensor and body ground • Harness or connector between actuator motor and Cruise Control ECU • Cruise Control ECU
14 (BE-89) (BE-93)	• Actuator Motor Circuit • Actuator Position Sensor Circuit	
21 (BE-96)	• Vehicle Speed Sensor	• Vehicle speed sensor • Combination meter • Harness or connector between vehicle speed sensor and combination meter, combination meter and Cruise Control ECU • Cruise Control ECU
*23 (BE-96)	• Actuator Control Cable • Vehicle Speed Sensor Circuit	• Actuator • Vehicle speed sensor • Harness or connector in OD and SPD circuit (Open or short intermittently) • Cruise Control ECU
32, 34 (BE-97)	• Control Switch Circuit (Cruise Control Switch)	• Cruise control switch • Harness or connector between control switch and Cruise Control ECU • Cruise Control ECU
41	• Cruise Control ECU	• Cruise Control ECU
42	• Source Voltage Drop	• Battery

HINT:

1. When 2 or more codes are indicated, the lowest numbered code will be displayed first.
2. If the inspection "Proceed to next circuit inspection shown on matrix chart" is given in the flow chart for each circuit, proceed to the circuit with the next highest number in the table to continue check.
3. If the trouble still reappears even though there are no abnormalities in any of the other circuits, then check or replace the cruise control ECU as the last step.

(*): When the vehicle speed decreases on uphill roads, the speed can be set again and driving continued.
(This is not a malfunction.)

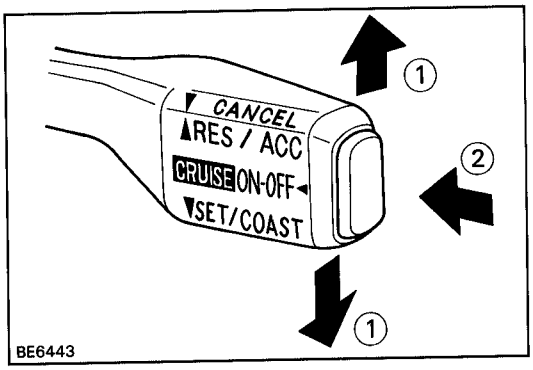

INPUT SIGNAL CHECK

Output of Code

1. (a) For check No.1 ~ No.2.
   Turn the ignition switch ON.
   (b) For check No.3
   ① Turn ignition switch ON.
   ② Shift to D position. (A/T Vehicle)
   (c) For check No.4
   ① Jack up the vehicle.
   ② Start the engine.
   ③ Shift to D position. (A/T Vehicle)
2. Press the control switch to SET/COAST or RES/ACC position and hold it down or hold it up ①.
3. Push the main switch ON ②.
4. Check that the CRUISE MAIN indicator light blinks twice or 3 times repeatedly after 3 seconds.
5. Turn the SET/COAST or RES/ACC switch OFF.
6. Operate each switch as listed in the table below.
7. Read the blinking pattern of the CRUISE MAIN indicator light.
8. After performing the check, turn the main switch OFF.
   HINT: When 2 or more signals are input to the ECU, the lowest numbered code will be displayed first.

No.	Operation Method	CRUISE MAIN Indicator Light Blinking Pattern	Diagnosis
1	Turn SET/COAST switch ON.	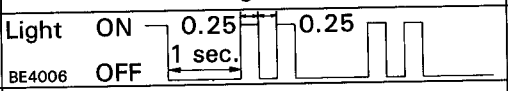	SET/COAST switch circuit is normal.
2	Turn RES/ACC switch ON.	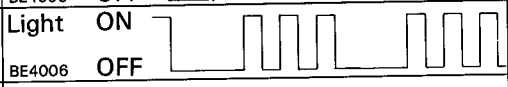	RES/ACC switch circuit is normal.
3	Turn CANCEL switch ON.	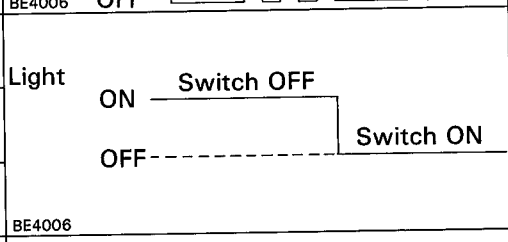	CANCEL switch circuit is normal.
	Turn stop light switch ON. (Depress brake pedal)		Stop light switch circuit is normal.
	Turn parking brake switch ON. (Pull up the parking brake lever)		Parking brake switch circuit is normal.
	Turn park/neutral position switch OFF. (Shift to except D position)	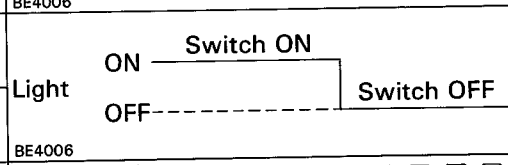	Park/neutral position switch circuit is normal.
	Turn clutch switch OFF. (Depress clutch pedal)		Clutch switch circuit is normal.
4	Drive at 40 km/h (25 mph) or higher.	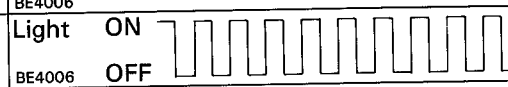	Vehicle speed sensor is normal.
	Drive at 40 km/h (25 mph) or below.	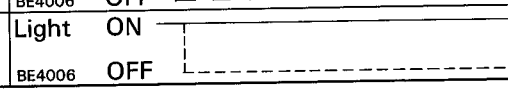	

BE

CRUISE CONTROL SYSTEM

PARTS LOCATION

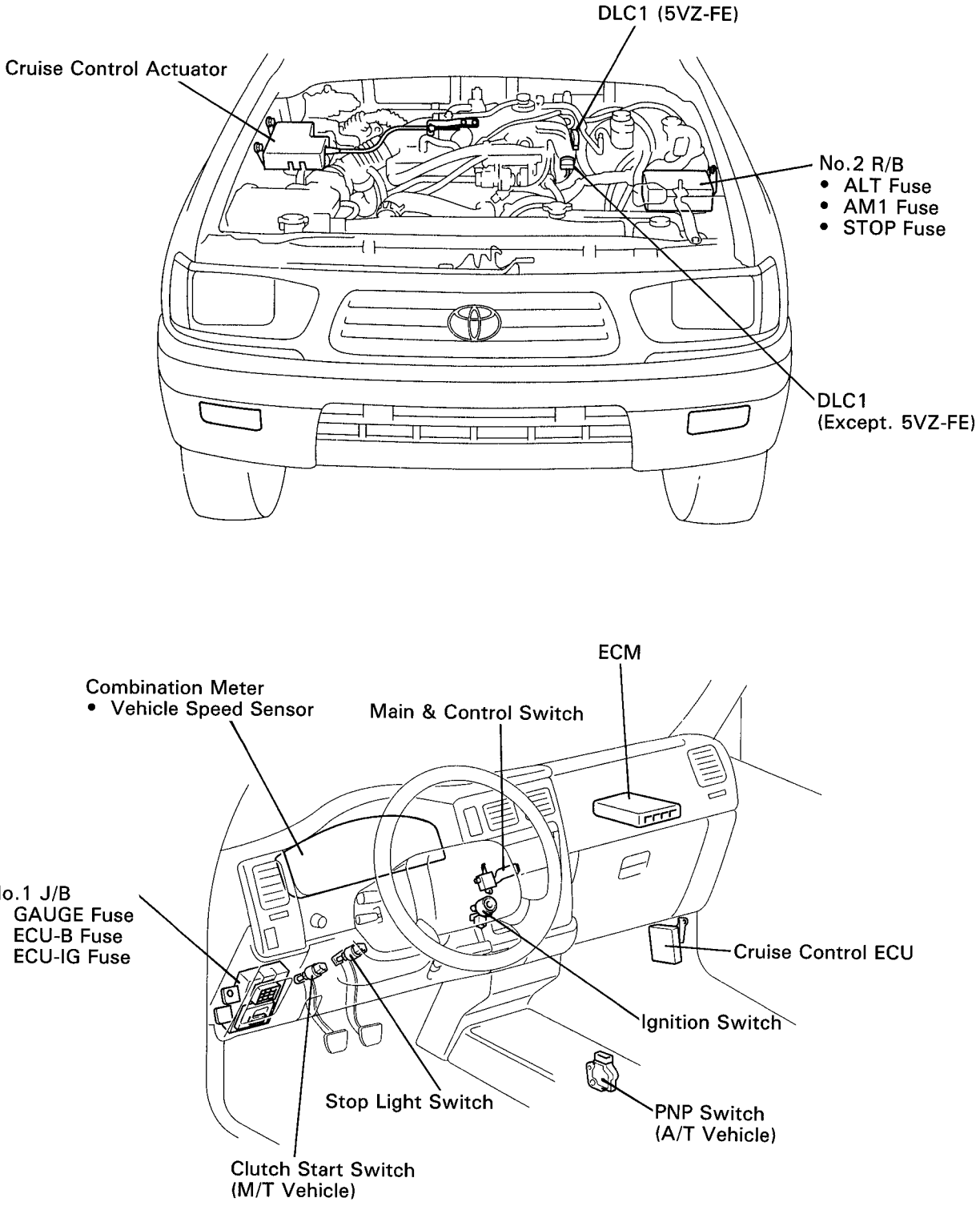

N13994
N13993

BE

STANDARD VALUE OF ECU TERMINAL

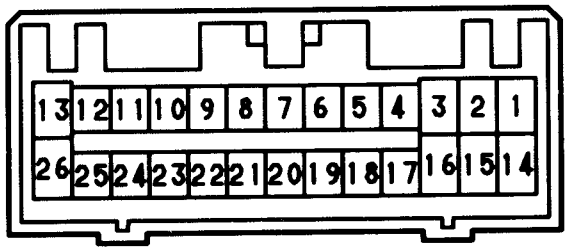

vd-26-2-B

CRUISE Control ECU

Terminals	Symbols	Condition	Standard Value
2 – 13	D ↔ GND	(M/T) Depress clutch pedal. (A/T) Shift to except D position.	Below 1 V
		(M/T) Release clutch pedal. (A/T) Shift to D position.	10 – 14 V
7 – 13	Pi ↔ GND	IG ON. Main Switch ON. Main indicator light ON.	Below 1.2 V
		IG ON. Main Switch OFF. Main indicator light OFF.	10 – 14 V
8 – 13	Tc ↔ GND	Ignition switch ON.	10 – 14 V
9 – 13	O/D ↔ GND	Except during cruise control driving.	10 – 14 V
		O/D switch ON. During cruise control driving. (Driving on flat road)	10 – 14 V
		O/D switch OFF. During cruise control driving. (3rd driving)	Below 1 V
10 – 13	L ↔ GND	During cruise control driving.	9 – 14 V
		Except during cruise control driving.	Below 1 V
11 – 13	MC ↔ GND	During cruise control driving. COAST switch hold ON.	9 – 14 V
		Except during cruise control driving.	Below 1 V
12 – 13	MO ↔ GND	During cruise control driving. ACCEL switch hold ON.	8 – 14 V
		Except during cruise control driving.	Below 1 V
13 – Body Ground	GND ↔ Body Ground	Always.	Below 1 V
14 – 13	B ↔ GND	Ignition switch ON.	10 – 14 V
15 – 13	BATT ↔ GND	Always.	10 – 14 V
16 – 13	STP – ↔ GND	Depress brake pedal.	10 – 14 V
		Release brake pedal.	Below 1.5 V

Termianls	Symbols	Condition	Standard Value
18 – 13	CCS ↔ GND	IG ON. Main switch ON. Switch neutral position.	10 – 14 V
		IG ON. Main switch ON. CANCEL switch hold ON.	4.1 – 7.2 V
		IG ON. Main switch ON. SET/COAST switch hold ON.	2.3 – 4.6 V
		IG ON. Main switch ON. RESUME/ACCEL switch hold ON.	0.7 – 2.5 V
19 – 13	CMS ↔ GND	IG ON. Main switch hold ON. (Indicator light ON)	Below 2 V
		IG ON. Main switch OFF. (Indicator Light OFF)	10 – 14 V
20 – 13	SPD ↔ GND	IG ON. Main switch hold ON. (Indicator light ON)	Below 1.5 V or 4 – 5.5 V
		During driving. (Pulse generated)	Repeatedly change Below 1.5 V to 4 – 5
21 – 13	IDL ↔ GND	IG ON. Throttle valve fully opened.	10 – 14 V
		IG ON. Throttle valve fully closed.	Below 2 V
22 – 13	ECT ↔ GND	Gear position O/D.	Below 1.0 V
		Gear position 3rd.	10 – 14 V
23 – 13	VR1 ↔ GND	Ignition switch ON.	4.5 – 5 V
24 – 25	VR2 ↔ VR3	During cruise control driving.	1 – 4.5 V
		IG ON. Control plate fully opened.	3.4 – 5.1 V
		IG ON. Control plate fully closed.	0.6 – 1.6 V
25 – 13	VR3 ↔ GND	Always.	Below 1 V
26 – 13	L – ↔ GND	Always.	Below 1 V

MATRIX CHART OF PROBLEM SYMPTOMS

If a normal code is displayed during the DTC check but the trouble still occurs (reappears), troubleshoot for each problem symptom, checking the circuits for each symptom in the order given in the table below. Proceed to the page indicated for each circuit.

HINT:

1. If the instruction ''Proceed to next circuit inspection shown on matrix chart'' is given in the flow chart for each circuit, proceed to the circuit with the next highest number in the table to continue the check.
2. If the trouble still reappears even though there are no abnormalities in any of the other circuits, then check or replace the cruise control ECU as the last step.

See page / Suspect Area / Symptom	Actuator	Vehicle Speed Sensor Circuit	Control Switch Circuit (Cruise Control Switch)	Stop Light Switch Circuit	Idle Switch Circuit (main throttle position sensor)	Electronically Controlled Transmission Communication Circuit	Park/Neutral Position Switch Circuit	Clutch Switch Circuit	ECU Power Source Circuit	Back-up Power Source Circuit	Main Switch Circuit (Cruise Control Switch)	Actuator Control Cable	Cruise Control ECU
	BE-90 BE-92 BE-94 BE-95	BE-96	BE-97	BE-100	BE-102	BE-104	BE-107	BE-109	BE-110	BE-112	BE-114	BE-117	IN-29
SET not occurring or CANCEL occurring. (DTC is normal.)	8	2	3	4			5	6			1		9
SET not occurring or CANCEL occurring. (DTC does not output.)									1				2
Actual vehicle speed deviates above or below the set speed.	3	2										1	4
Gear shifting is frequent between 3rd and OD when driving on uphill road. (Hunting)						1							2
Cruise control not cancelled, even when brake pedal is depressed.	3			2								1	4
Cruise control not cancelled, even when transmission is shifted to except D position. (A/T)	3						2					1	4
Cruise control not cancelled, even when clutch pedal depressed. (M/T)	3							2				1	4
Control switch does not operate. (SET/COAST, ACC/RES, CANCEL not possible)	3		2									1	4
SET possible at 40 km/h (25 mph) or less, or CANCEL does not operate at 40 km/h (25 mph) or less.	3	2										1	4
Poor response in ACCEL and RESUME modes.	4		3			2						1	5
O/D does not Resume, even though the road is not uphill.						1							2
DTC memory is erased.										1			2
DTC is not output, or is output when is should not be.													1
Cruise MAIN indicator light remains ON or fails to light up.	Combination meter troubleshooting on page BE-33.												

BE

CIRCUIT INSPECTION

DTC 11, 14 Actuator Motor Circuit

CIRCUIT DESCRIPTION

The actuator motor is operated by signals from the ECU. Acceleration and deceleration signals are transmitted by changes in the Duty Ratio (See note below).

Duty Ratio
The duty ratio is the ratio of the period of continuity in one cycle. For example, if A is the period of continuity in one cycle, and B is the period of non-continuity, then

$$\text{Duty Ratio} = \frac{A}{A+B} \times 100\ (\%)$$

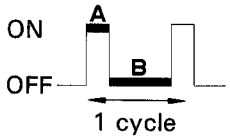

BE4056

DTC No.	DTC Detecting Condition	Trouble area
11	• Short in motor circuit	• Cruise control actuator motor • Harness or connector between actuator motor and ECU • ECU
14	• Open in actuator motor circuit	

WIRING DIAGRAM

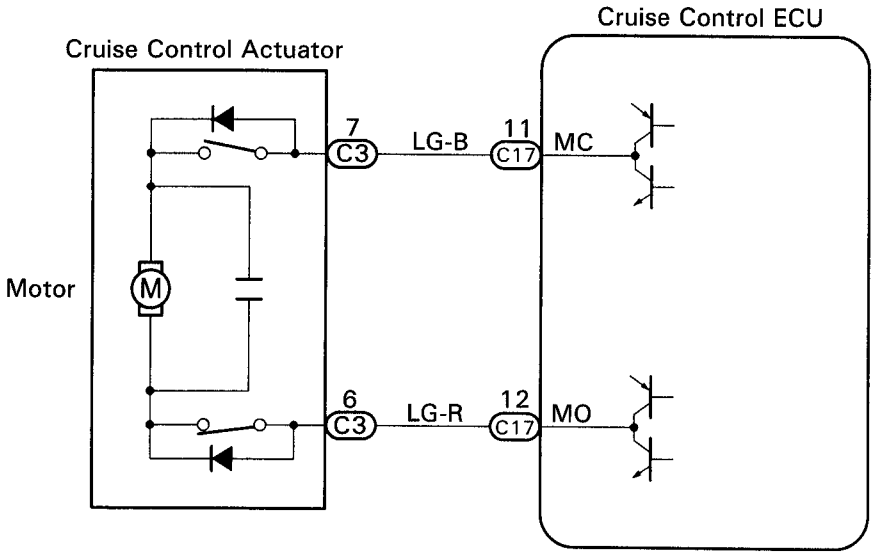

N14254

BE

1 Check actuator motor.

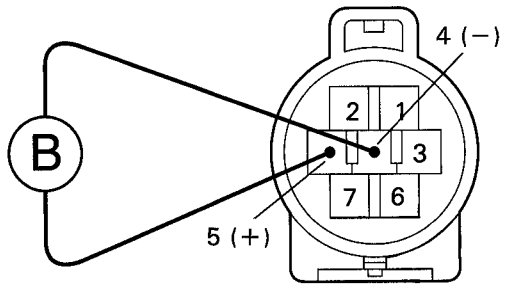

RZN Series Engine:

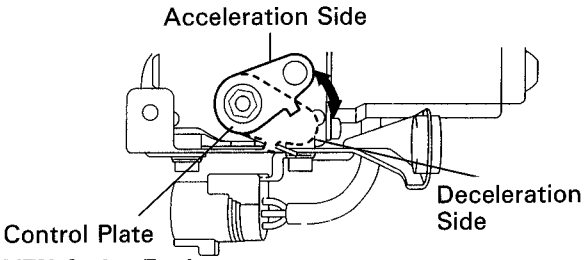

VZN Series Engine:

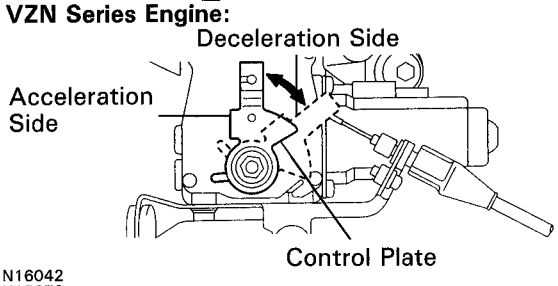

N16042
N15972
N15973

P

1. Remove cruise control actuator.
2. Disconnect actuator connector.

C

1. Connect positive ⊕ lead to terminal 5 and negative ⊖ lead to terminal 4 of actuator connector.
   (Magnetic clutch ON)

NOTICE: Do not connect the high tension cables to the wrong battery terminal.
You will damage the cruise control actuator.

2. When battery positive voltage is applied to each of the actuator connector terminals check that the control plate moves smoothly without hesitating.

○—○ Connect

Moving direction \ Terminal	Positive ⊕	Negative ⊖	6	7
Acceleration side	○		○	
		○		○
Deceleration side	○			○
		○	○	

3. With the motor rotating as in 2., check that the motor is stopped by limit switches when the control plate moves to fully opened or fully closed position.

OK

NG → **Replace actuator assembly.**

2 Check harness and connector between cruise control ECU and actuator motor (See page IN-24).

OK

NG → **Repair or replace harness or connector.**

Proceed to next circuit inspection shown on matrix chart (See page BE-88).
However, when DTC 11, 23 is displayed, check and replace cruise control ECU.

BE

DTC 12 Actuator Magnetic Clutch Circuit

CIRCUIT DESCRIPTION

This circuit turns on the magnetic clutch inside the actuator during cruise control operation according to the signal from the ECU. If a malfunction occurs in the actuator or vehicle speed sensor, etc. during cruise control, the rotor shaft between the motor and control plate is released.

When the brake pedal is depressed, the stoplight switch turns on, supplying electrical power to the stoplight. Power supply to the magnetic clutch is mechanically cut and the magnetic clutch is turned OFF.

When driving downhill, if the vehicle speed exceeds the set speed by 15 km/h (9 mph), the ECU turns the magnetic clutch OFF. If the vehicle speed later drops to within 10 km/h (6 mph) above the set speed, then cruise control at the set speed is resumed.

DTC No.	DTC Detecting Condition	Trouble area
12	• Short in magnetic clutch circuit. • Open (0.8 sec) in magnetic clutch circuit. • Open in STOP Fuse.	• Cruise control magnetic clutch. • Harness or connector between ECU and magnetic clutch, magnetic clutch and body ground. • ECU

WIRING DIAGRAM

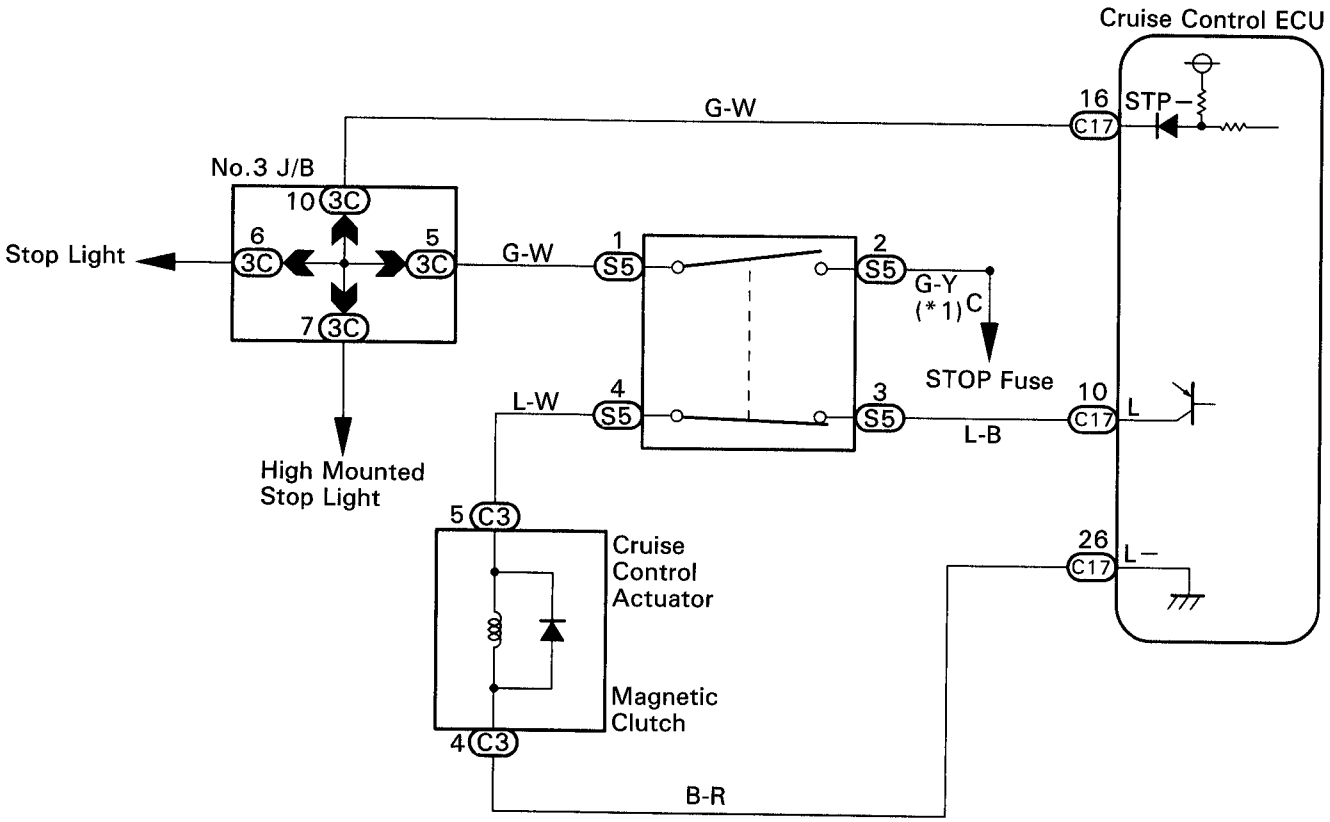

N14257

*1: w/ Cruise Control

BE

INSPECTION PROCEDURE

1 Check actuator magnetic clutch.

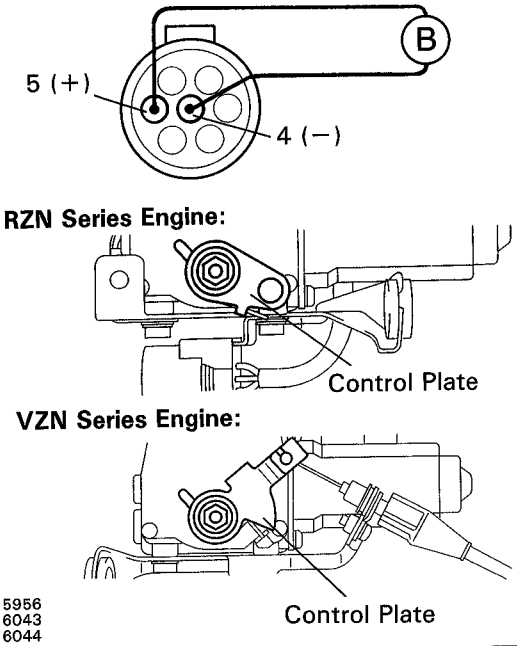

N15956
N16043
N16044

P (1) Remove cruise control actuator.
(2) Disconnect actuator connector.

C Move the control plate by hand.

OK **Control plate moves. (Magnetic clutch off)**

C (1) Connect positive ⊕ lead to terminal 5 and negative ⊖ lead to termianl 4 of actuator connector.
(2) Move the control plate by hand.
NOTICE: Do not connect the high tension cables to the wrong battery terminal.
You will damage the cruise control actuator.

OK **Control plate does not move. (Magnetic clutch on)**

OK → **NG** → **Replace actuator assembly.**

2 Check stop light switch.

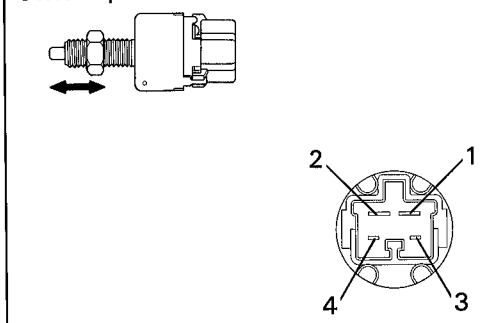

BE1444 BE6234

P Disconnect stop light switch connector.

C Check continuity between terminals.

OK

Terminals / Switch position	1	2	3	4
Switch pin free (Brake pedal depressed)	○—○			
Switch pin pushed in (Brake pedal released)			○—○	

○—○ Continuity

OK → **NG** → **Replace stop light switch.**

3 Check for open and short in harness and connectors between ECU and stop light switch, stop light switch and magnetic clutch, magnetic clutch and body ground (See page IN-28).

OK → **NG** → **Repair or replace harness or connector.**

Proceed to next circuit inspection shown on matrix chart (See page BE-88).
However, when DTC 12 is displayed, check harness and connector for loose connection.
If connection is normal, check and replace ECU.

DTC 13, 14 Actuator Position Sensor Circuit

CIRCUIT DESCRIPTION

The circuit detects the rotation position of the actuator control plate and sends a signal to the ECU.

DTC No.	DTC Detecting Condition	Trouble area
13	• Position sensor detects abnormal voltage.	• Cruise control actuator motor. • Cruise control actuator position sensor. • Harness or connector between actuator position sensor and body ground. • Harness or connector between actuator motor and ECU. • ECU
14	• Open in actuator motor circuit. • Position sensor signal value does not change when the motor operates.	

WIRING DIAGRAM

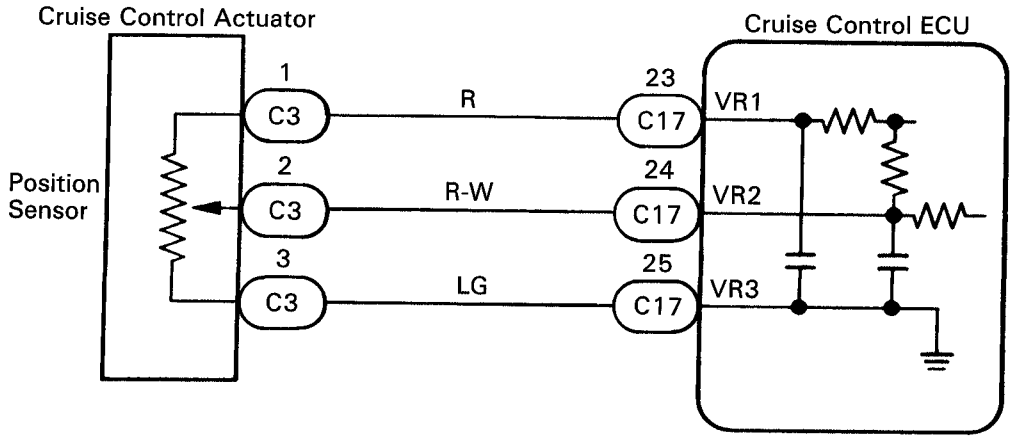

N14258

BE

INSPECTION PROCEDURE

1 **Check voltage between terminals VR2 and VR3 of ECU connector.**

ON

RZN Series Engine:

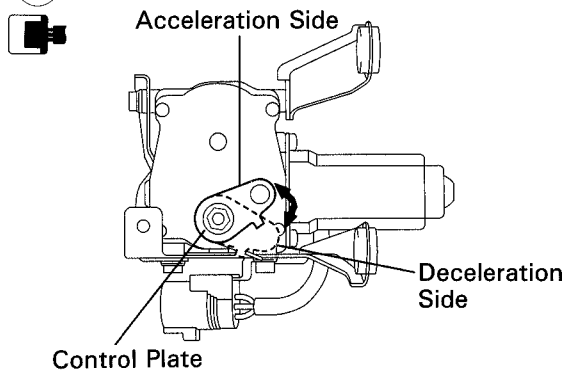

VZN Series Engine:

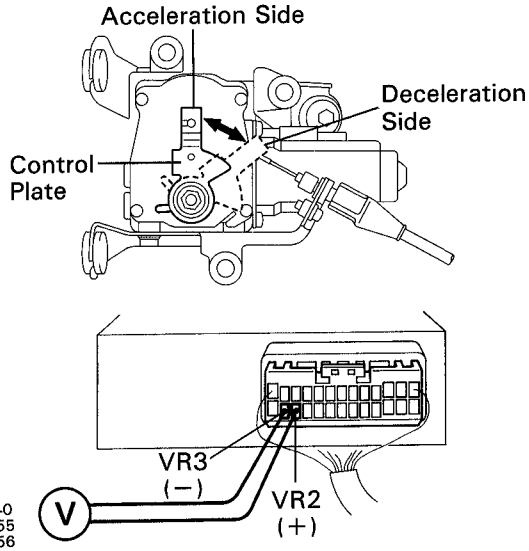

P Remove ECU with connectors still connected.

C (1) Turn ignition switch ON.
(2) Measure voltage between terminals VR2 and VR3 of ECU connector while turning control plate slowly by hand from the deceleration side to the acceleration side.

OK **Voltage:**
Fully closed: Approx. 1.3 V
Fully opened: Approx. 4.6 V
Note: As the control plate is turned, the voltage should increase gradually without interruption.

NG

OK **Proceed to next circuit inspection shown on matrix chart (See page BE-88).**

2 Check actuator position sensor.

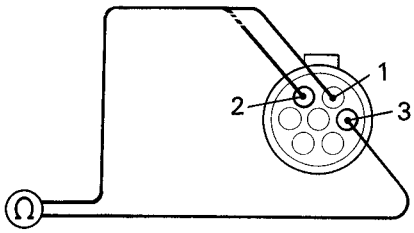

RZN Series Engine:

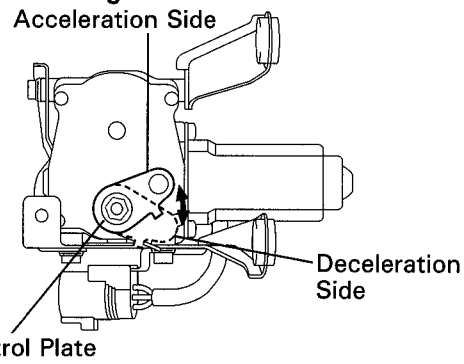

VZN Series Engine:

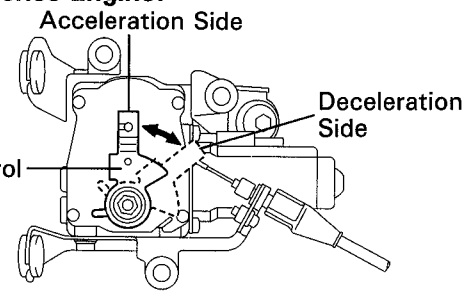

N15958
N14255
N14256

P (1) Remove cruise control actuator.
(2) Disconnect actuator connector.

C Measure resistance between actuator terminals 1 and 3 of actuator connector.

OK **Resistance: Approx. 2.2 kΩ**

C Measure resistance between terminals 2 and 3 of actuator connector while turning the control plate slowly by hand from the deceleration side to the acceleration side.

OK **Resistance:**
Fully closed: Approx. 530 Ω
Fully opened: Approx. 2.0 kΩ
Note: As the control plate turns, the resistance should increase gradually without interruption.

OK

NG → **Replace actuator assembly.**

3 Check for open and short in harness and connector between ECU and actuator position sensor (See page IN-28).

OK

NG → **Repair or replace harness or connector.**

Check harness and connector for loose connection.
If connection is normal check and replace ECU.

BE

DTC 21, 23 Vehicle Speed Sensor Circuit

CIRCUIT DESCRIPTION

The vehicle speed sensor signal is sent to the cruise control ECU as the vehicle speed signal.
The rotor shaft is driven by the gear of the transmission.
For each rotation of the shaft, the vehicle speed sensor sends a 4-pulse signal to the combination meter. This signal is converted inside the combination meter and sent as a 4-pulse signal to the cruise control ECU. The ECU calculates the vehicle speed from this pulse frequency.

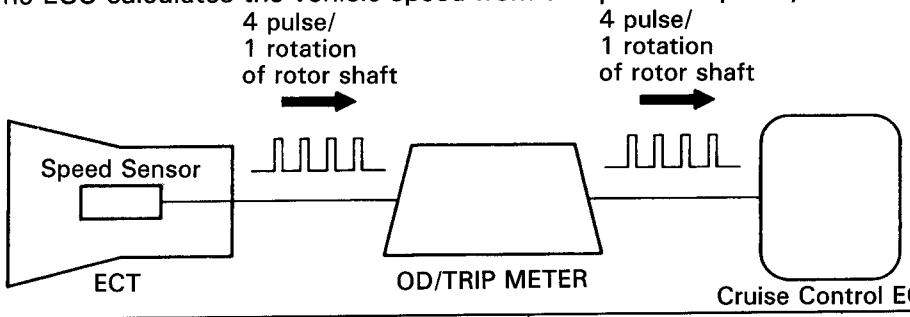

N10528

DTC No.	DTC Detecting Condition	Trouble area
21	Speed signal is not input to the ECU while cruise control is set.	• Vehicle speed sensor • Combination meter • Harness or connector between speed sensor and combination meter, combination meter and ECU • ECU
23	• Vehicle speed decrease 16 km/h or more than preset speed. • Vehicle speed sensor pulse is abnormal.	• Actuator • Vehicle speed sensor • Harness or connector in OD and SPD circuit (Open or short intermittently) • ECU

WIRING DIAGRAM

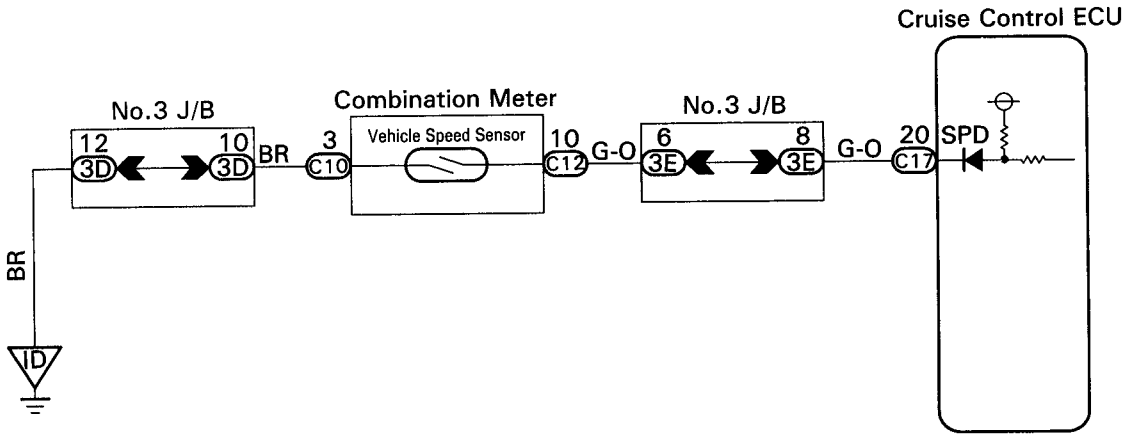

N14259

INSPECTION PROCEDURE

1 Input signal check.

Vehicle speed	Indicator light blinking pattern
Above 40 km/h (25 mph)	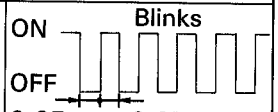
Below 40 km/h (25 mph)	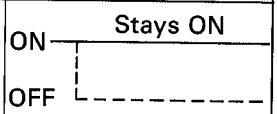

BE4006

C (1) See input signal check on page BE-84.
(2) Check indicator light operation when driving with vehicle speed above 40 km/h (25 mph), and with vehicle speed below 40 km/h (25 mph).

OK **Vehicle speed above 40 km/h (25 mph): Indicator light blinks**
Vehicle speed below 40 km/h (25 mph): Indicator light stays on

NG

OK → **Proceed to next circuit inspection shown on matrix chart (See page BE-88).**

2 Check speedometer circuit (See combination meter troubleshooting on page BE-33).

OK

NG → **Repair or replace speed sensor, harness, connector or combination meter assembly.**

Check harness and connector for loose connection. If connection is normal, check and replace ECU.

DTC 32, 34 Control Switch Circuit (Cruise Control Switch)

CIRCUIT DESCRIPTION

This circuit carries the SET/COAST, RESUME/ACCEL and CANCEL signals (each voltage) to the ECU.

DTC No.	DTC Detecting Condition	Trouble area
32	Short in, control switch circut	• Cruise control switch. • Harness or connector between control switch and ECU. • ECU
34	Voltage abnormality in control switch	

BE

WIRING DIAGRAM

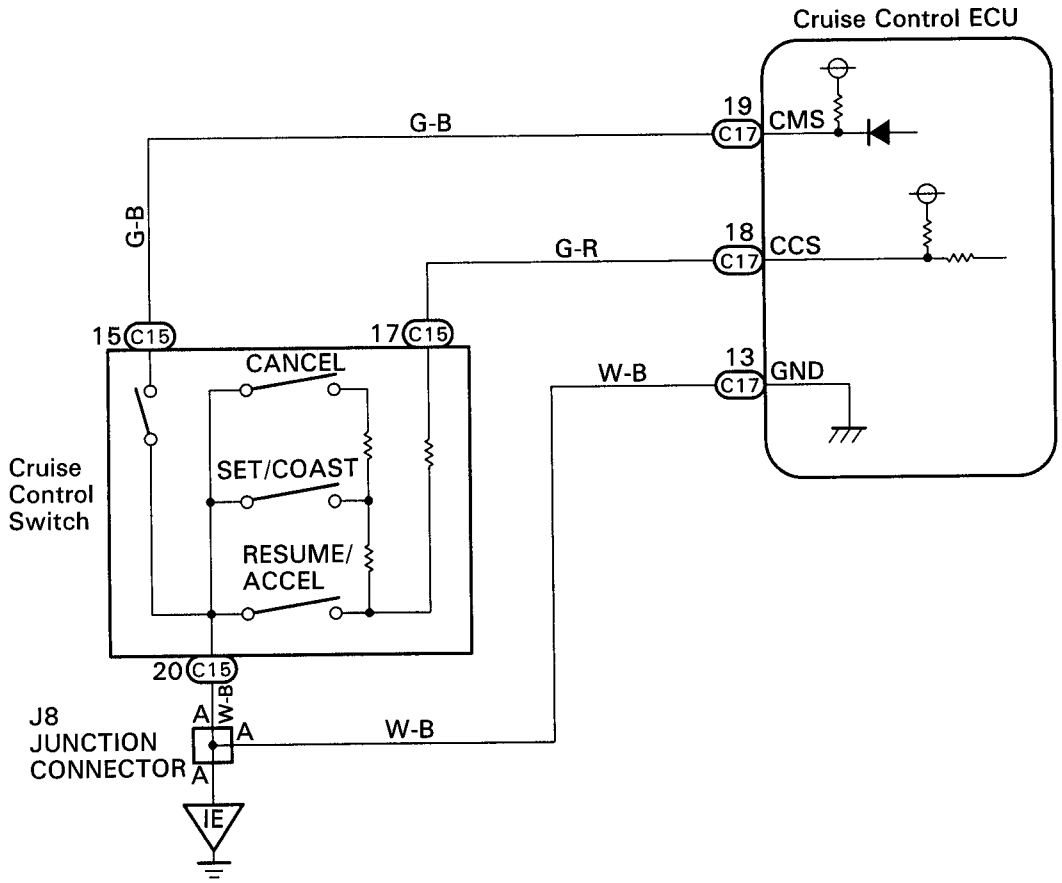

N14260

INSPECTION PROCEDURE

1 Input signal check.

Input Signal	Indicator light blinking pattern
SET/COAST SWITCH	ON — 2 Pulse — OFF
RESUME/ACCEL SWITCH	ON — 3 Pulse — OFF
CANCEL SWITCH	ON — Switch OFF — OFF — Switch ON

BE4006

P (1) See input signal check on page BE-84.
(2) Check the indicator light operation when each of the SET/COAST, RESUME/ACCEL and CANCEL is turned. ON.

OK **SET/COAST, RESUME/ACCEL Switch**
The signals shown in the table on the left should be output when each switch is ON. The signal should disappear when the switch is turned OFF.
CANCEL Switch.
The indicator light goes off when the cancel switch is turned ON.

NG

OK ⟩ **Proceed to next circuit inspection shown on matrix chart (See page BE-88).**

2 Check voltage between terminal CCS of ECU connector and body ground.

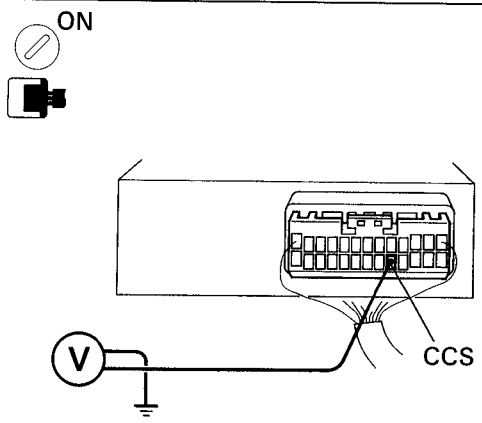

BE3840
N15959

P Remove ECU with connectors still connected.

C (1) Turn ignition switch ON.
(2) Measure voltage between terminal CCS of ECU connector and body ground, when each of the SET/COAST, RESUME/ACCEL and CANCEL is turned ON.

OK

Switch position	Voltage
Neutral	10 – 14 V
RES/ACC	0.7 – 2.5 V
SET/COAST	2.3 – 4.6 V
CANCEL	4.1 – 7.2 V

NG

OK ⟩ **Proceed to next circuit inspection shown on matrix chart (See page BE-88).**

Go to step 3 .

BE

3 Check control switch.

Disconnect

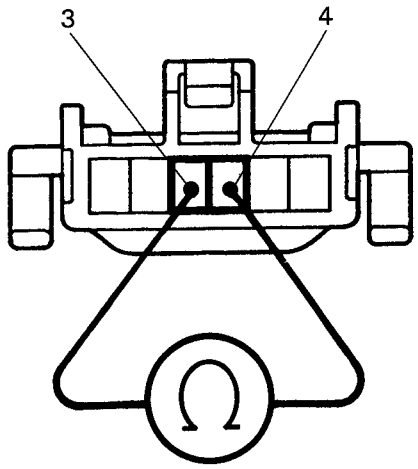

BE4061
N16045

P
1. Remove steering wheel center pad.
2. Disconnect control switch connector (See page SR-13).

C Measure resistance between terminals 3 and 4 of control switch connector when control switch is operated.

OK

Switch position	Resistance
Neutral	1 MΩ or higher
RES/ACC	60 – 80 Ω
SET/COAST	180 – 220 Ω
CANCEL	400 – 440 Ω

Hint **When diagnostic trouble code 34 is displayed, carefully check that resistance is always ∞ in neutral position, particularly when switching between RES/ACC and SET/COAST.**

NG → **Replace cruise control switch.**

OK

4 Check for open and short in harness and connector between ECU and control switch (See page IN-28).

NG → **Repair or replace harness or connector.**

OK

Check and replace ECU.

Stop Light Switch Circuit

BE

CIRCUIT DESCRIPTION

When the brake is on, battery voltage normally applies through the stop fuse and stop switch to terminal STP− of the ECU, and the ECU turns the cruise control off.

A fail-safe function is provided so that cancel functions normally even if there is a malfunction in the stop light signal circuit.

① If the harness connected to terminal STP− has an open, terminal STP− will have battery positive voltage and the cruise control will be turned off, also SET not occurring.

② The STP signal is not input because of the fuse disconnection, the clutch disconnecting signal is detected by the cruise control ECU and 1 – 2 code is output.
Thus, 1 – 2 code also means the STP fuse disconnection.

Also, when the brake is on, the magnetic clutch is cut electrically by the stop light switch, turning the cruise control off. (See page BE-92 for operation of the magnetic clutch.)

WIRING DIAGRAM

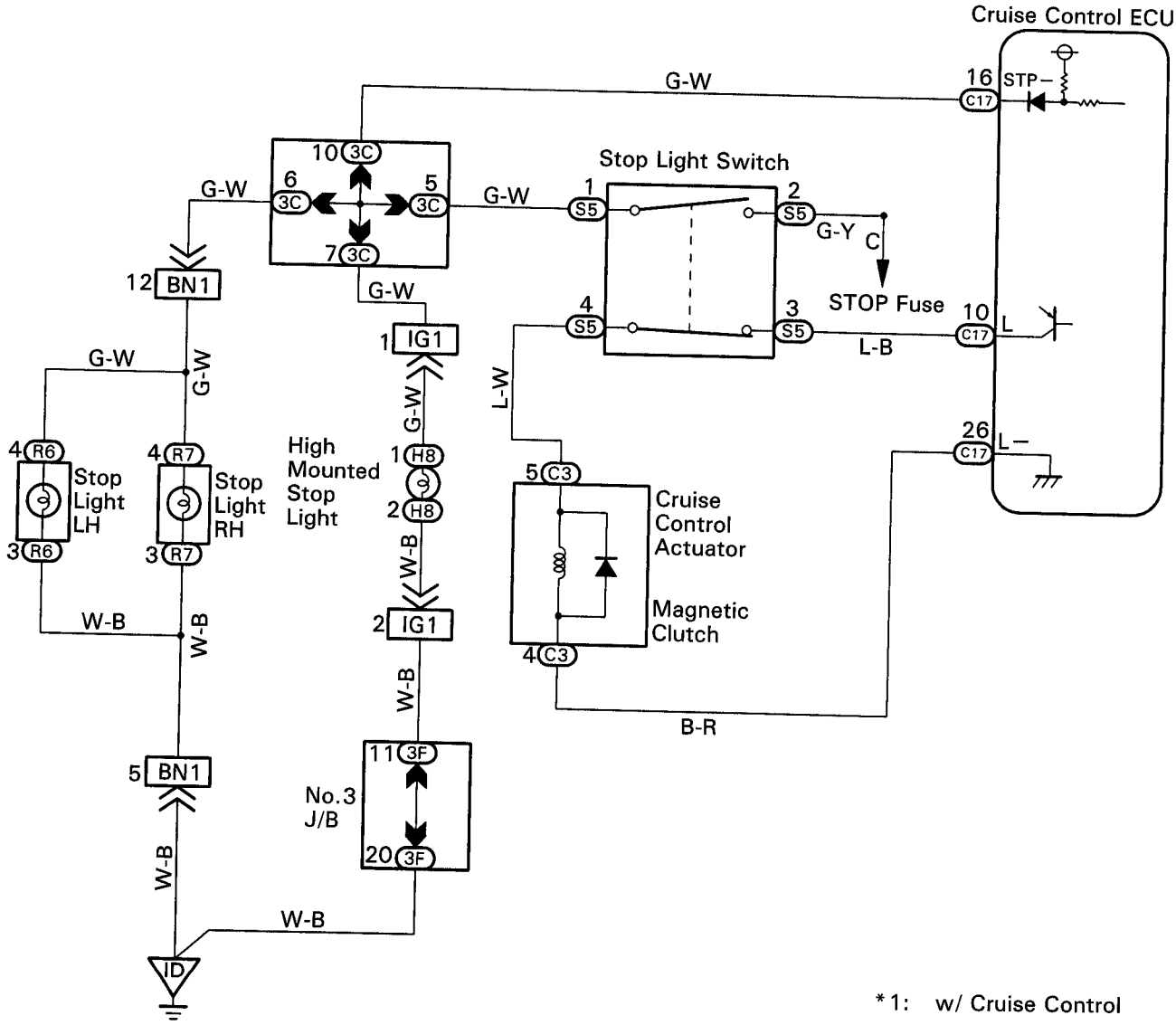

N14262

INSPECTION PROCEDURE

1	Check operation of stop light.
C	Check that stop light comes on when brake pedal is depressed, and turns off when brake pedal is released.

OK

NG > Check stop light circuit.

BE

2 Input signal check.

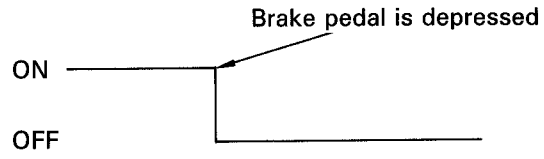

BE4006

C (1) See input signal check on page BE-84.
(2) Check the indicator light when the brake pedal is depressed.

OK **The indicator light goes off when the brake pedal is depressed.**

NG

OK ⟩ **Proceed to next circuit inspection shown on matrix chart (See page BE-88).**

3 Check voltage between terminal STP+, STP− of ECU connector and body ground.

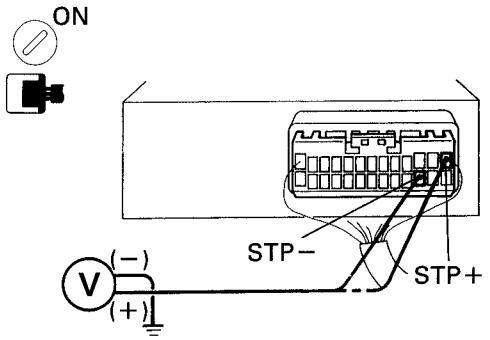

BE3840
N15960

P Remove ECU with connectors still connected.

C (1) Turn ignition switch ON.
(2) Measure voltage between terminal STP+, STP− of ECU connector and body ground when the brake pedal is depressed and released.

OK

	STP+	STP−
Depressed	10 – 14 V	10 – 14 V
Released	10 – 14 V	Below 1 V

NG

OK ⟩ **Proceed to next circuit inspection shown on matrix chart (See page BE-88).**

4 Check for open in harness and connectors between terminal STP+ of ECU and stop light switch, terminal STP− of ECU and stop light switch (See page IN-26).

OK

NG ⟩ **Repair or replace harness or connector.**

Check and replace ECU.

BE

Idle Switch Circuit

CIRCUIT DESCRIPTION

When the idle switch is turned ON, a signal is sent to the ECU. The ECU uses this signal to correct the discrepancy between the throttle valve position and the actuator position sensor value to enable accurate cruise control at the set speed. If the idle switch is malfunctioning, problem symptoms also occur in the engine, so also inspect the engine.

WIRING DIAGRAM

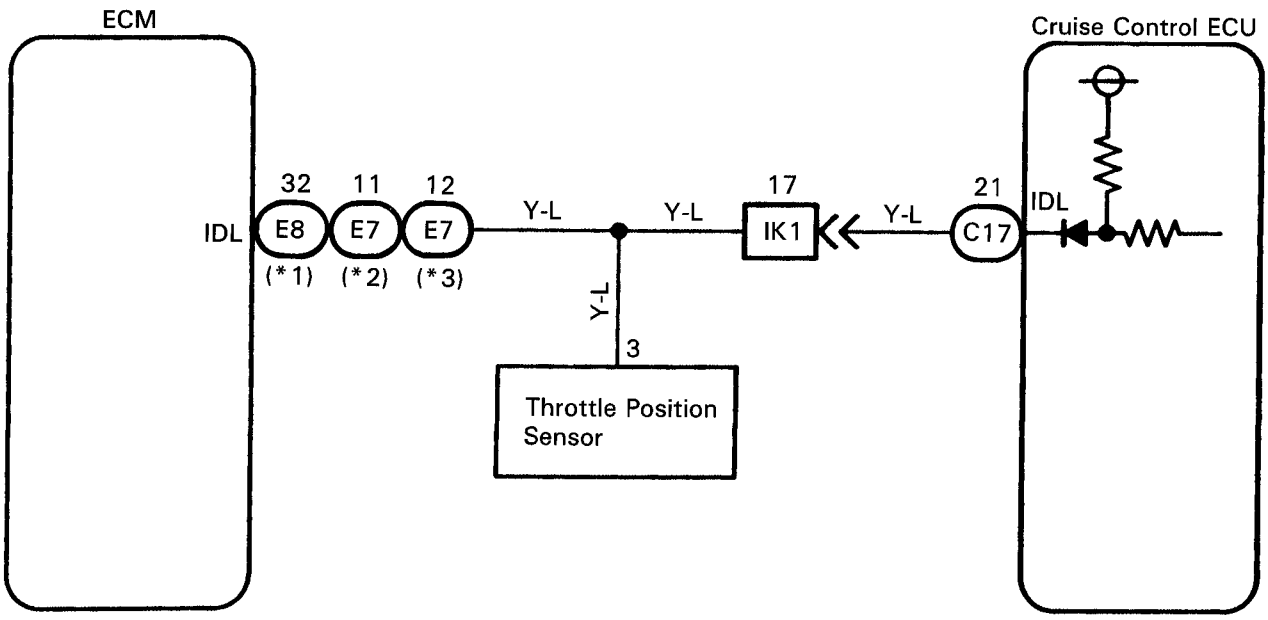

*1: 5VZ-FE A/T
*2: 5VZ-FE M/T, 3RZ-FE A/T
*3: 3RZ-FE M/T, 2RZ-FE

N14263

INSPECTION PROCEDURE

1 **Check voltage between terminal IDL of ECU connector and body ground.**

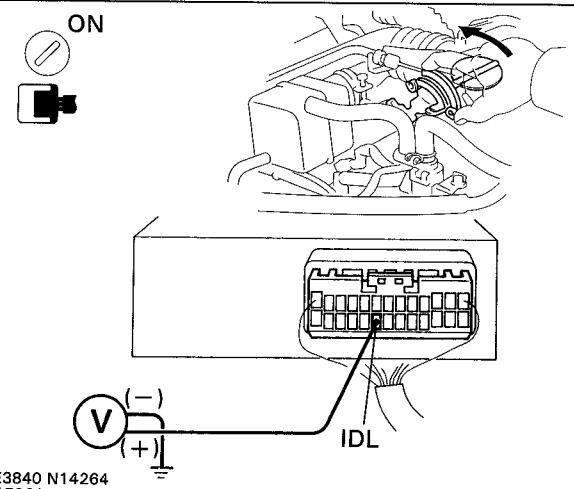

BE3840 N14264
N15961

P (1) Remove cruise control ECU with connectors still connected.
(2) Disconnect ECM and ABS & TRAC ECU connector.

C (1) Turn ignition switch ON.
(2) Measure voltage between terminal IDL of ECU connector and body ground when the throttle valve is fully closed and fully opened.

OK

Throttle valve position	Voltage
Fully opened	10 – 14 V
Fully closed	Below 2 V

NG

OK **Proceed to next circuit inspection shown on matrix chart (See page BE-88).**

BE

2 **Check throttle position sensor.**

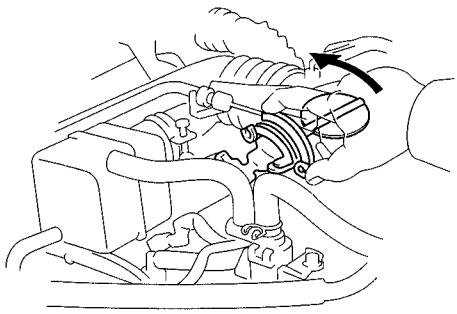

N14264

P Disconnect throttle position sensor connector.

C Measure resistance between terminals 1 and 2 of throttle position sensor connector when the throttle valve is fully closed and fully opened.

OK

Throttle valve position	Resistance
Fully opened	1 MΩ or higher
Fully closed	Below 2.3 kΩ

OK

NG → **Replace throttle position sensor.**

3 **Check for open and short in harness and connector between ECU and throttle position sensor, throttle position sensor and body ground (See page IN-28).**

OK

NG → **Repair or replace harness or connector.**

Check and replace ECU.

Electronically Controlled Transmission Communication Circuit

CIRCUIT DESCRIPTION

While the vehicle is climbing uphill under cruise control, when downshift occurs in the electronically controlled transmission, a signal is sent from the cruise control ECU to the electronically controlled transmission to prevent upshift until the end of the uphill slope. This is for smooth driving by reducing shifting due to ON/OFF operations of the overdrive.
Terminal ECT of the cruise control ECU detects the shift change signal from the electronically controlled transmission. (The signal is caused by the output to the electronically controlled transmission No.2 solenoid.)
While the vehicle speed is being reduced, when terminal ECT of the cruise control ECU detects downshift signal, terminal OD of the cruise control ECU sends a signal to OD1 of ECM to cut overdrive until the end of the uphill slope.
Then the gear shifts are reduced and gear shift points in the electronically controlled transmission are changed.

WIRING DIAGRAM

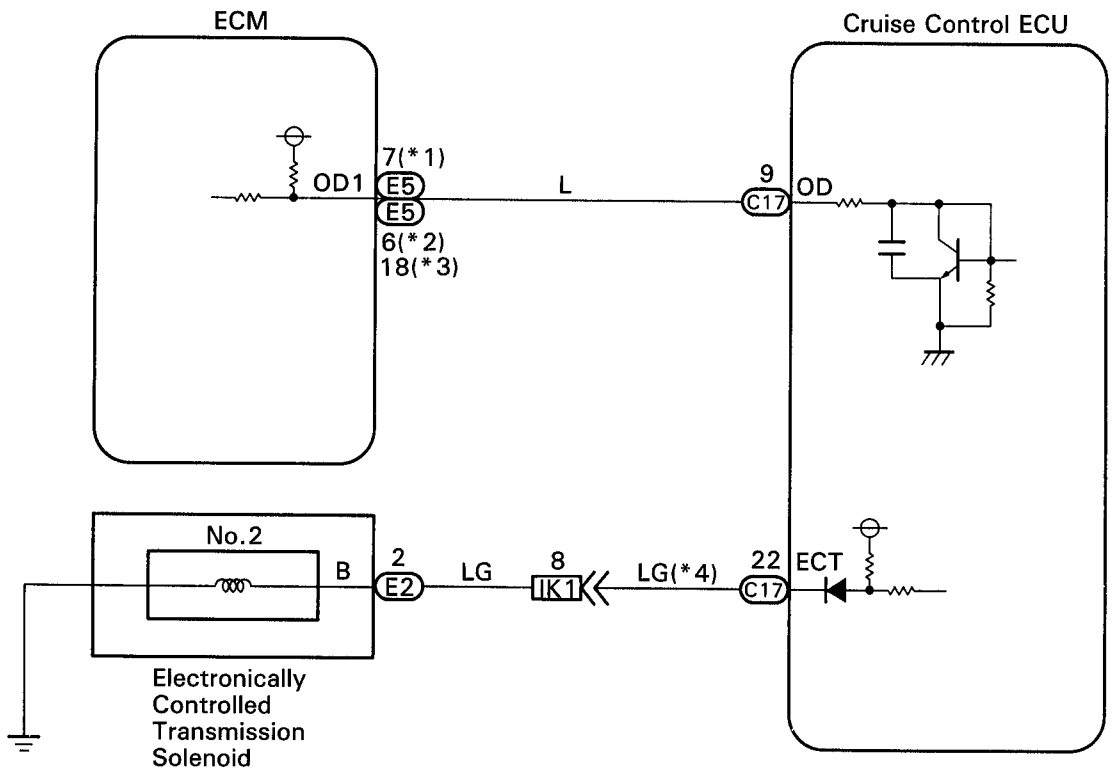

*1: 5VZ-FE
*2: Except 5VZ-FE Column A/T
*3: Except 5VZ-FE Floor A/T
*4: Except 2RZ-FE

N14265

INSPECTION PROCEDURE

1 Check operation of overdrive.

P Test drive after engine warm up.

C Check that overdrive ON ↔ OFF occurs with operation of OD switch ON-OFF.

OK

NG → **Check and repair electronically controlled transmission (See page AT-79).**

BE

2 Check voltage between terminal OD of harness side connector of ECU and body ground.

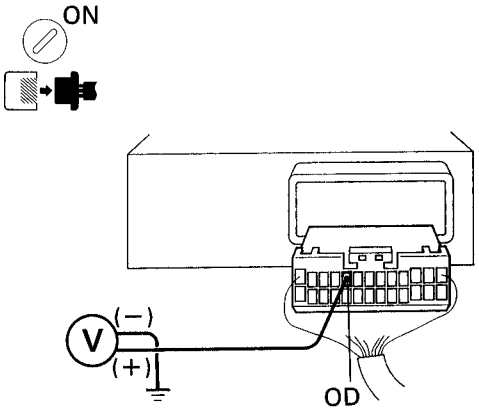

BE3841 N15962

P Remove ECU with connector still connected.

C (1) Disconnect ECU connector.
(2) Ture ignition switch ON.
(3) Measure voltage between terminal OD of harness side connector of ECU and body ground.

OK **Voltage: 10 ~ 14 V**

OK

Go to step 3 .

NG **Go to step 5 .**

3 Check voltage between terminal ECT of cruise control ECU connector and body ground (On test drive).

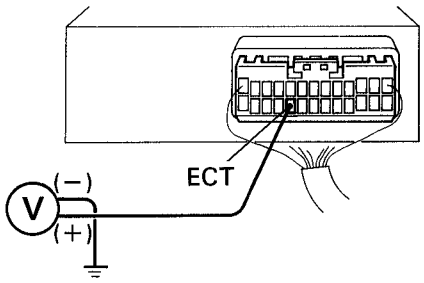

N15963

P (1) Connect ECU connector.
(2) Test drive after engine warm up.

C Check voltage between terminal ECT of cruise control ECU connector and body ground when OD switch is on and off.

OK

Gear Position	Voltage
O/D	Below 1 V
3rd	10 – 14 V

NG

OK **Proceed to next circuit inspection shown on matrix chart (See page BE-87).**

4 Check for open and short in harness and connector between terminal ECT of cruise control ECU and electronically controlled transmission solenoid (See page IN-28).

OK

Check and repair ECU.

NG **Repair or replace harness or connector.**

BE

5 **Check for open and short in harness and connector between terminal OD of ECU and terminal OD1 of ECM (See page IN-28).**

OK

NG → **Repair or replace harness or connector.**

Check and replace ECM.

Park/Neutral Position Switch Circuit

CIRCUIT DESCRIPTION

When the shift position is put in except D position, a signal is sent from the park/neutral position switch to the ECU. When this signal is input during cruise control driving, the ECU cancels the cruise control.

WIRING DIAGRAM

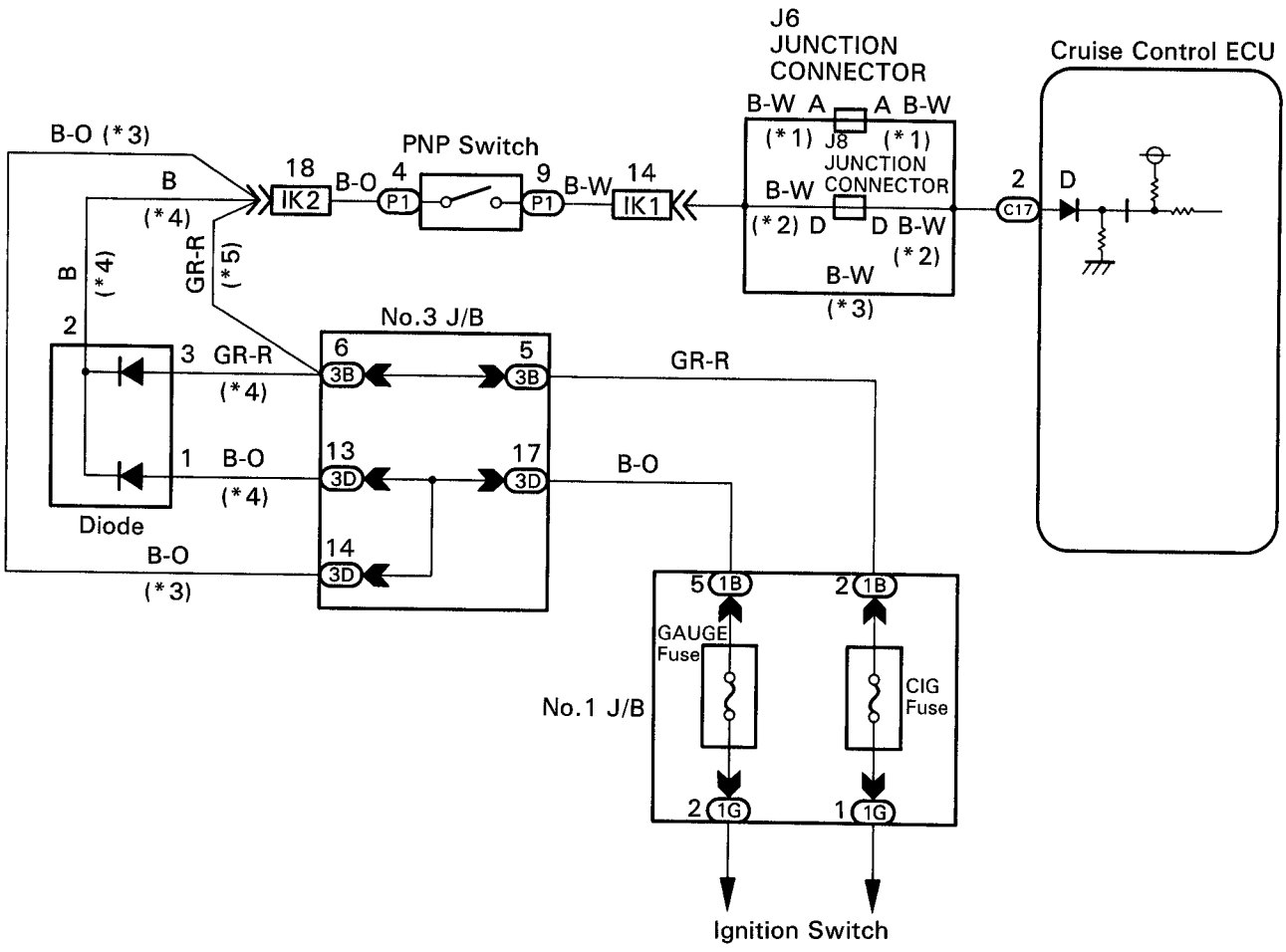

*1: Column A/T (Except 5VZ-FE USA)
*2: Column A/T (5VZ-FE USA)
*3: Floor A/T
*4: CANADA Column A/T
*5: USA Column A/T

N14266

BE

INSPECTION PROCEDURE

1 Check operation of starter.

C Check that the starter operates normally and that the engine starts.

OK

NG > **Proceed to engine troubleshooting (2RZ-FE, 3RZ-FE: See page EG-184) (5VZ-FE: See page EG-192).**

2 Input signal check.

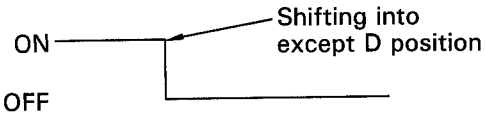

P (1) See input signal check on page BE-84.
(2) Check the indicator light when shifting into except D position.

OK **The indicator light goes off when shifting into except D position.**

NG

OK > **Proceed to next circuit inspection shown on matrix chart (See page BE-88).**

3 Check voltage between terminal D of ECU connector and body ground.

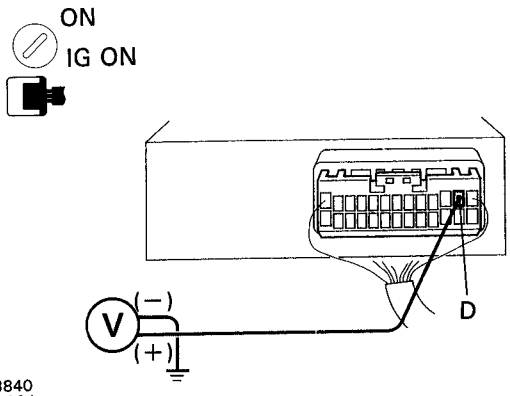

P Remove ECU with connectors still connected.

C (1) Turn ignition switch ON.
(2) Measure voltage between terminal D of ECU connector and body ground when shifting into D position and other ranges.

OK

Shift Position	Voltage
D position	10 – 14 V
Other positions	Below 1 V

NG

OK > **Proceed to next circuit inspection shown on matrix chart (See page BE-88).**

4 Check for open in harness and connector between ECU and GAUGE fuse (See page IN-26).

OK

NG > **Repair or replace harness or connector.**

Check and replace ECU.

BE

Clutch Switch Circuit

CIRCUIT DESCRIPTION

When the clutch pedal is depressed, the clutch switch sends a signal to the cruise control ECU. When the signal is input to the cruise control ECU during cruise control driving, the cruise control ECU cancels cruise control.

WIRING DIAGRAM

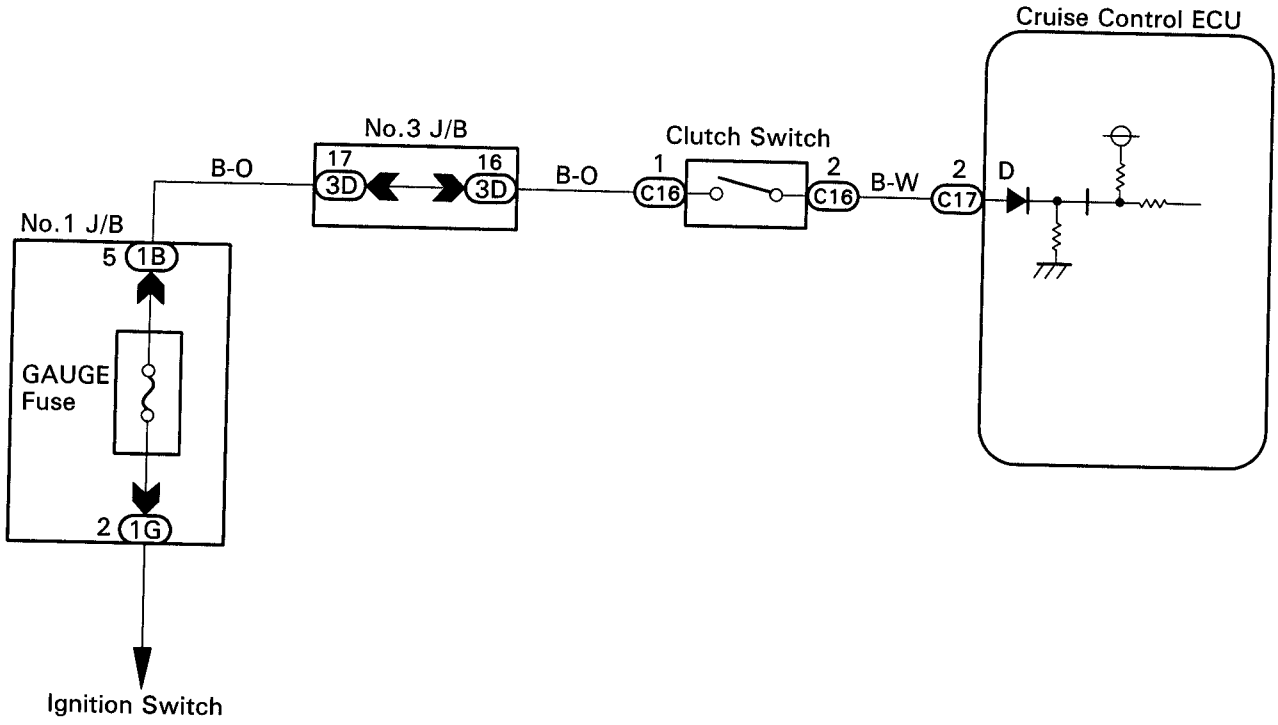

N14267

INSPECTION PROCEDURE

1 Check operation of starter.

C Check that the starter operates normally and that the engine starts.

OK

NG → **Proceed to engine troubleshooting (2RZ-FE, 3RZ-FE: See page EG-184) (5VZ-FE: See page EG-192).**

BE

2 Input signal check.

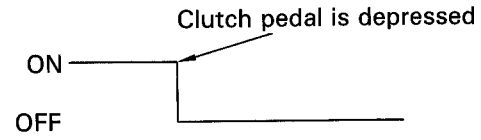

BE4006

P (1) See input signal check on page BE-84.
(2) Check the indicator light when the clutch pedal is depressed.

OK **The indicator light goes off when the clutch pedal is depressed.**

NG

OK **Proceed to next circuit inspection shown on matrix chart (See page BE-88).**

3 Check voltage between terminal D of ECU connector and body ground.

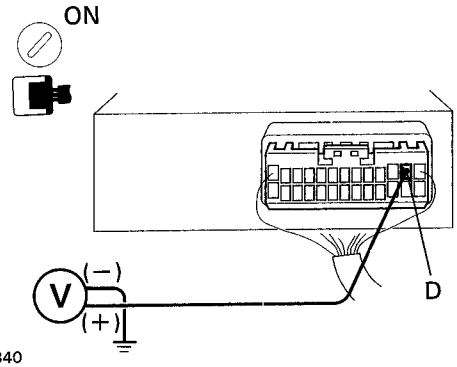

BE3840
N15964

P Remove ECU with connectors still connected.

C (1) Turn ignition switch ON.
(2) Measure voltage between terminal D of ECU connector and body ground, when the clutch pedal is depressed.

OK

Switch Position	Voltage
ON (pedal depressed)	Below 1 V
OFF	10 — 14 V

NG

OK **Proceed to next circuit inspection shown on matrix chart (See page BE-88).**

4 Check for open in harness and connector between ECU and GAUGE fuse (See page IN-26).

OK

NG **Repair or replace harness or connector.**

Check and replace ECU.

BE

ECU Power Source Circuit

CIRCUIT DESCRIPTION

The ECU power source supplies power to the actuator and sensors, etc., Terminal GND and the cruise control ECU case are grounded.

WIRING DIAGRAM

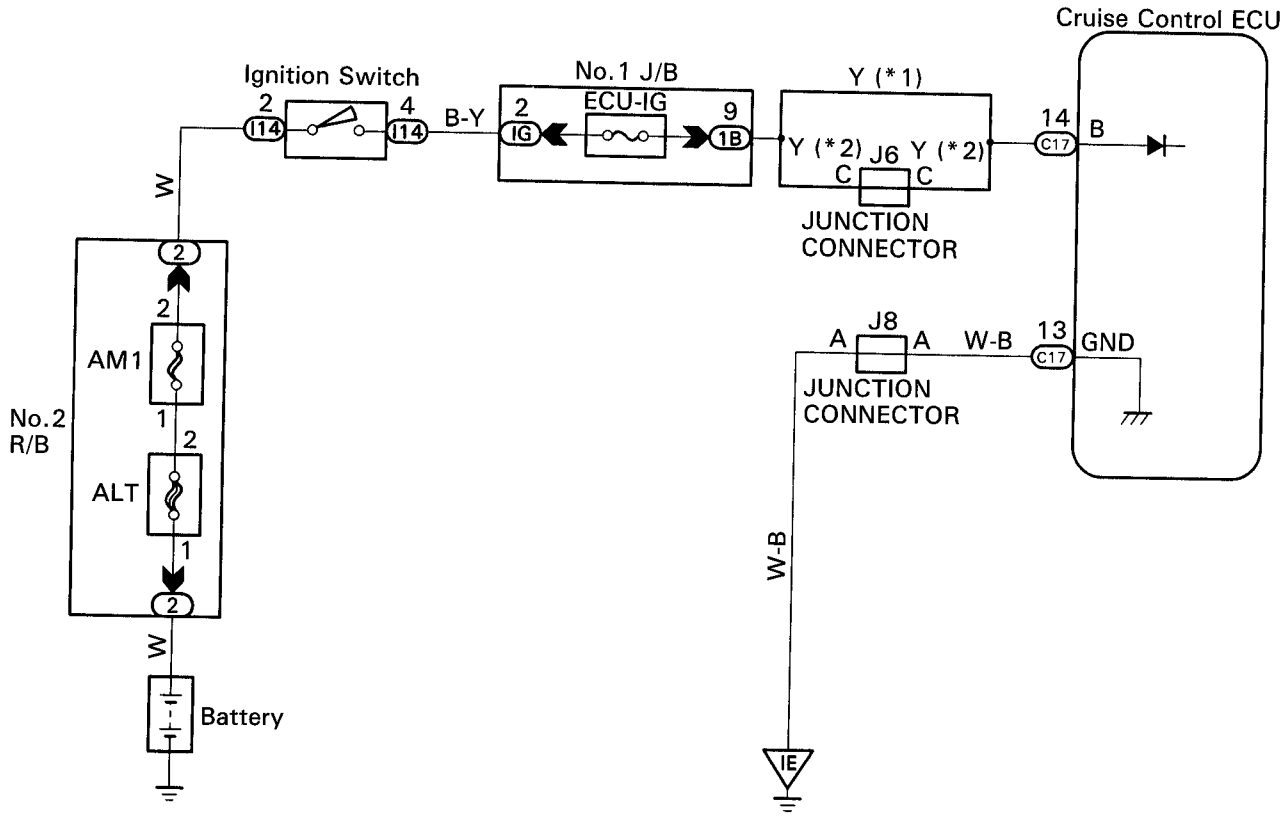

INSPECTION PROCEDURE

1 Check ECU-IG fuse.

No.1 J/B

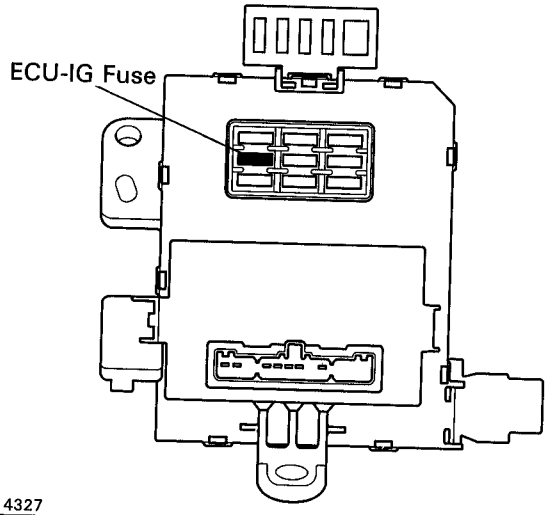

P Remove ECU-IG fuse from No.1 J/B.

C **Check continuity of ECU-IG fuse.**

OK **Continuity**

OK

NG **Check for short in all the harness and components connected to the ECU-IG fuse (See attached wiring diagram).**

BE

2 **Check voltage between terminals B and GND of ECU connector.**

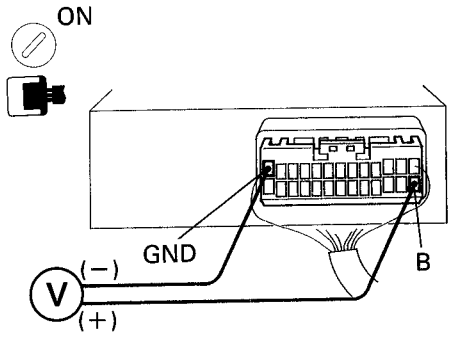

BE3840
N15965

P Remove ECU with connectors still connected.

C (1) Turn ignition switch ON.
(2) Measure voltage between terminals B and GND of ECU connector.

OK **Voltage: 10 – 14 V**

NG

OK **Proceed to next circuit inspection shown on matrix chart (See page BE-88).**

Go to step 3.

3 **Check continuity between terminal GND of ECU connector and body ground.**

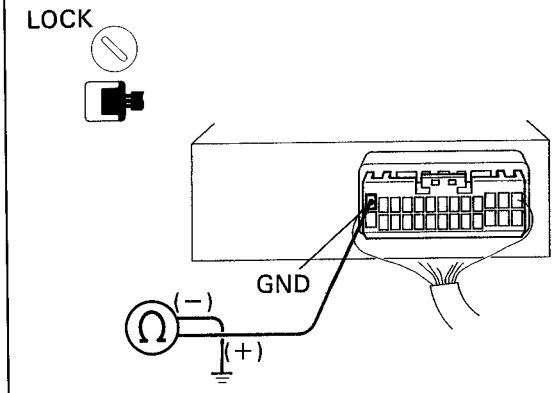

BE3842
N15966

P Measure resistance between terminal GND of cruise control ECU connector and body ground.

OK **Resistance: 1 Ω or less**

OK

NG **Repair or replace harness or connector.**

Check and repair harness and connector between battery and ECU.

BE

Back-up Power Source Circuit

CIRCUIT DESCRIPTION

The ECU back-up power source provides power even when the ignition switch is off and is used for diagnostic code memory, etc.

WIRING DIAGRAM

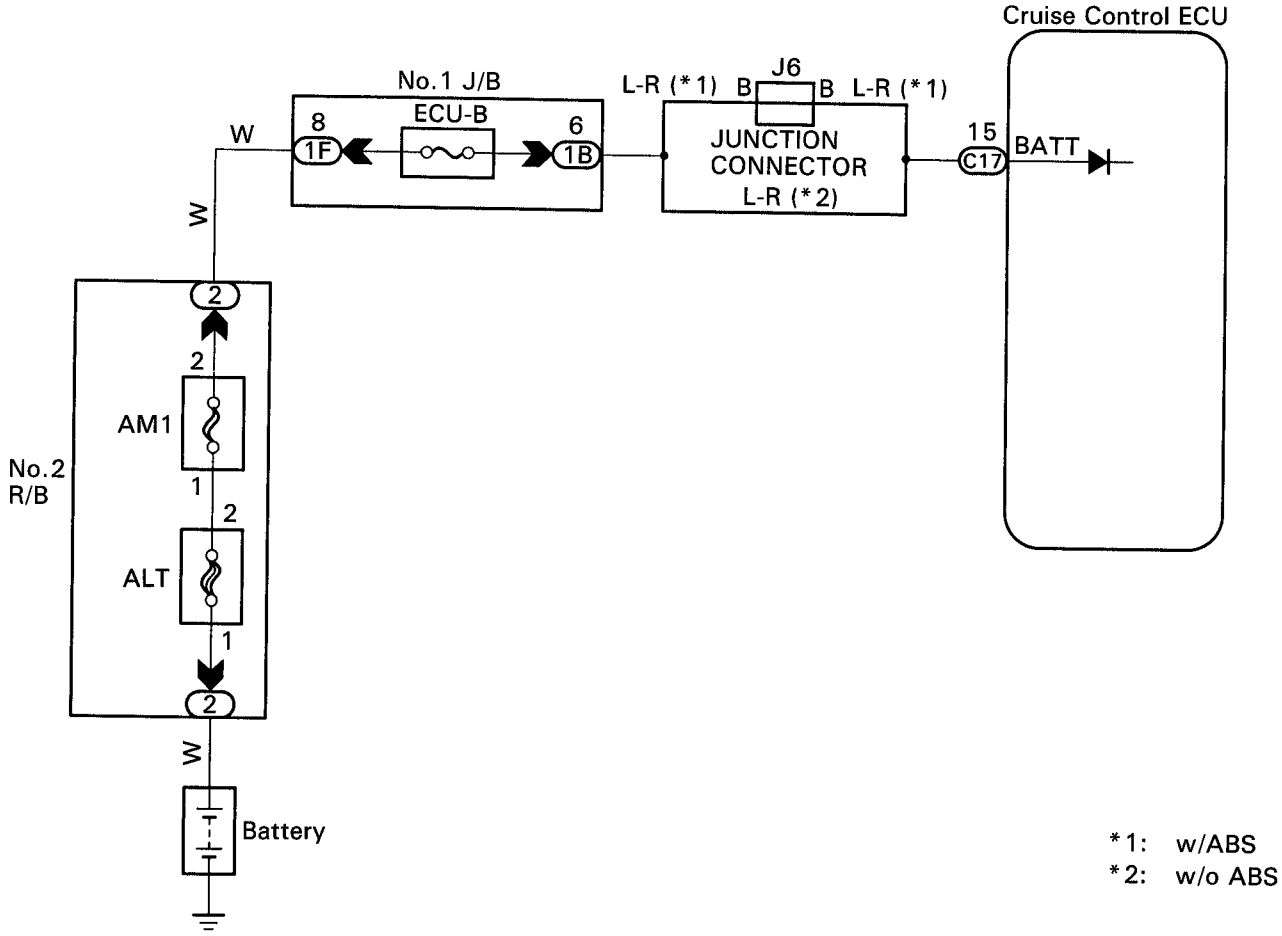

INSPECTION PROCEDURE

1 **Check ECU-B fuse.**

No.1 J/B

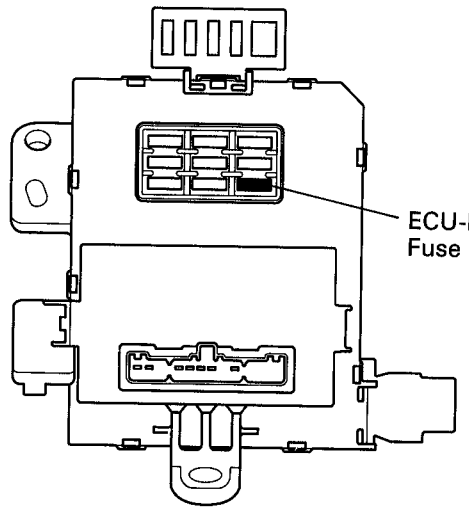

P Remove ECU-B fuse from No.1 J/B.

C Check continuity of ECU-B fuse.

OK **Continuity**

OK

NG **Check for short in all the harness and components connected to the ECU-B fuse (See attached wiring diagram).**

BE

2 **Check voltage between terminal BATT of ECU connector and body ground.**

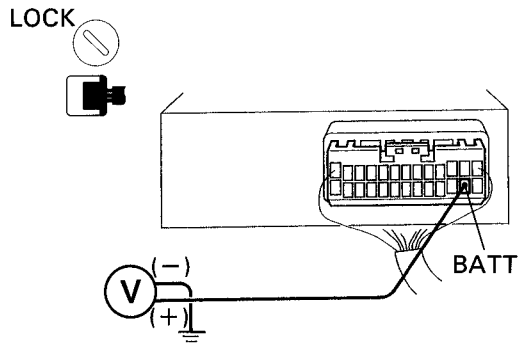

P Remove ECU with connectors still connected.

C Measure voltage between terminal BATT of ECU connector and body ground.

OK **Voltage: 10 – 14 V**

NG

Check and repair harness and connector between battery and ECU.

OK **Proceed to next circuit inspection shown on matrix chart (See page BE-88).**

Main Switch Circuit (Cruise Control Switch)

CIRCUIT DESCRIPTION

When the cruise control main switch is turned off, the cruise control does not operate.

WIRING DIAGRAM

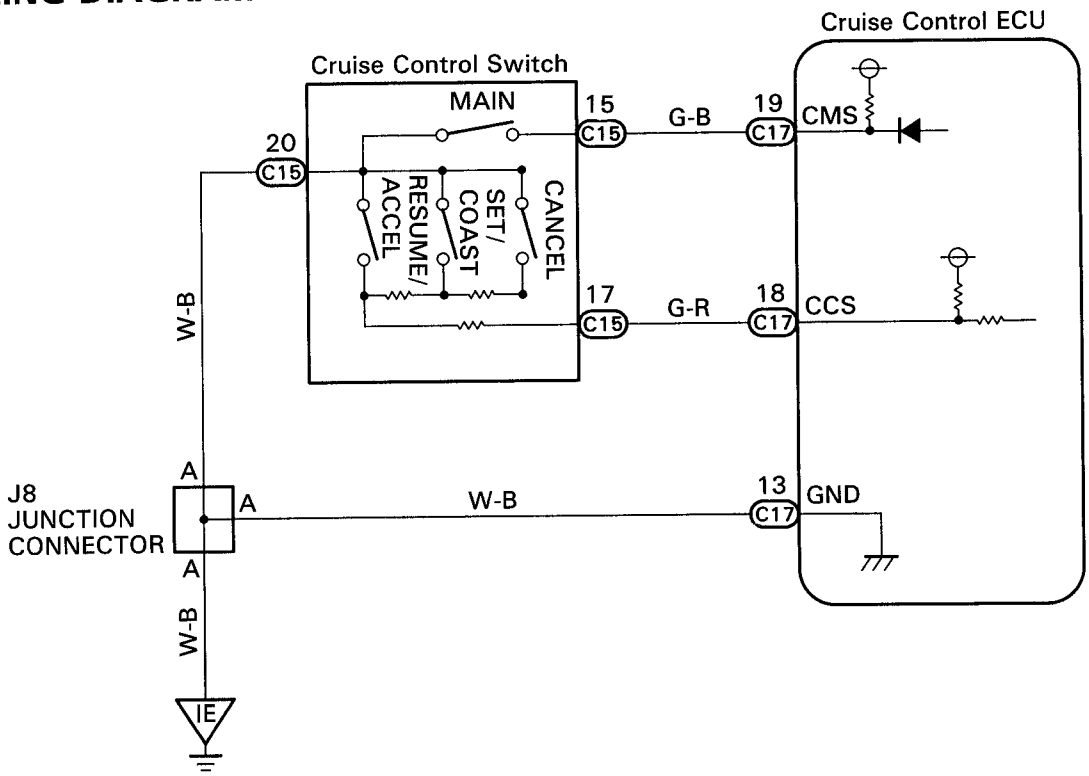

BE

1 Check voltage between terminal CMS and GND of cruise control ECU connector.

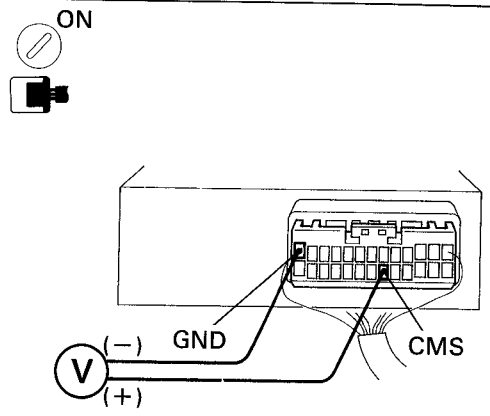

BE3840
N15968

P Remove cruise control ECU with connectors still connected.

C
1. Turn ignition switch ON.
2. Measure voltage between terminal CMS and GND of cruise control ECU connector when main switch is held ON and OFF.

OK

Main switch	Voltage
OFF	10 – 14 V
ON	Below 2 V

NG

OK → **Proceed to next circuit inspection shown on matrix chart (See page BE-88).**

2 Check main switch.

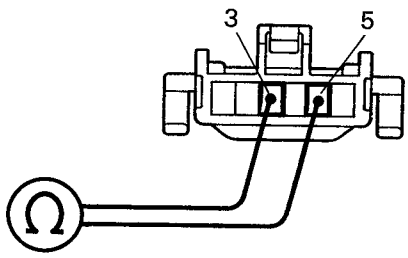

N15969

P
1. Remove steering wheel center pad (See page SR-13).
2. Disconnect cruise control switch connector.

C Check continuity between terminals 3 and 5 of cruise control switch connector when main switch is held ON and OFF.

OK ○—○ : Continuity

Terminals / Main switch	3	5
OFF		
ON	○	○

OK

NG → **Replace control switch.**

3 Check harness and connector between cruise control ECU and main switch, main switch and body ground (See page IN-29).

OK

NG → **Repair or replace harness or connector.**

Check and replace cruise control ECU.

BE

TC Circuit

CIRCUIT DESCRIPTION

This circuit sends a signal to the ECU that diagnostic code output is required.

WIRING DIAGRAM

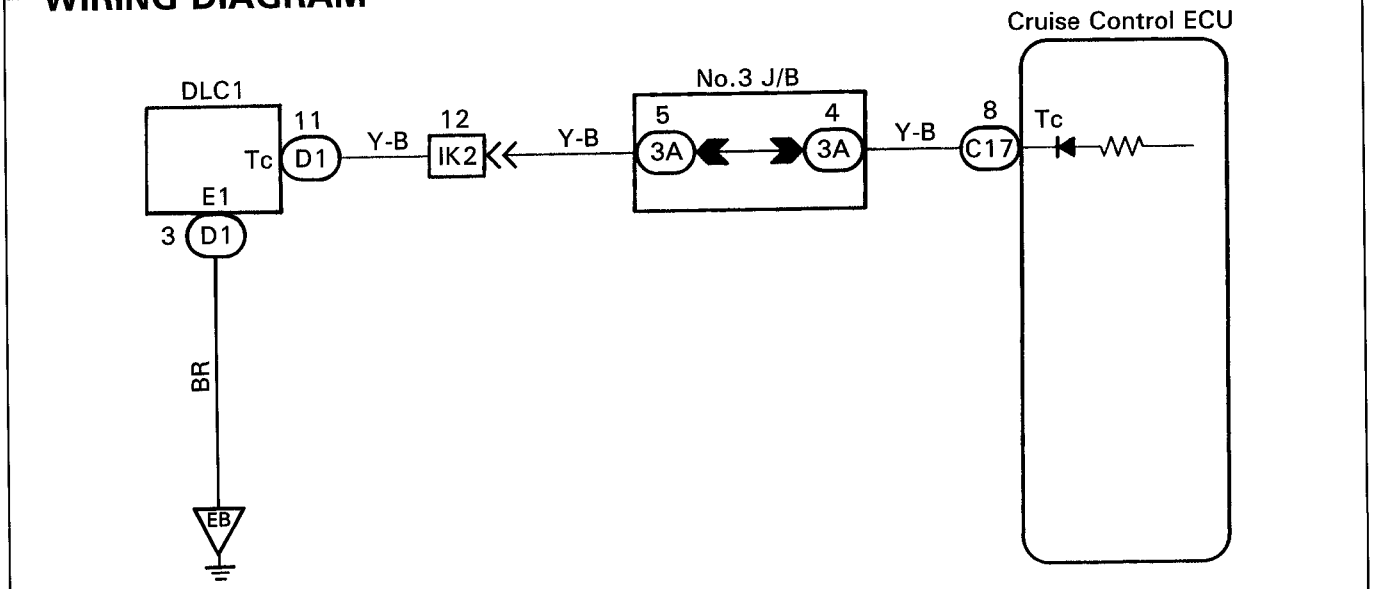

N14272

INSPECTION PROCEDURE

1 **Check voltage between terminals Tc and E1 of DLC1.**

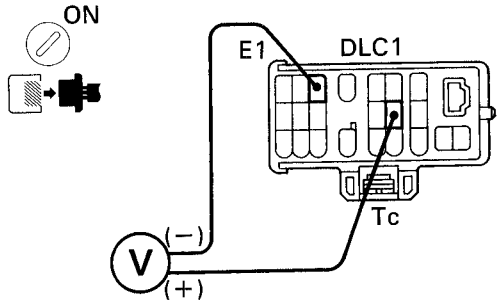

BE3841 N15970

C (1) Turn ignition switch ON.
(2) Measure voltage between termianls Tc and E1 of DLC1.

OK **Voltage: 10 — 14 V**

OK

NG **Proceed to next circuit inspection shown on matrix chart (See page BE-88).**

2 **Check for open and short in harness and connector between ECU and DLC1, DLC1 and body ground (See page IN-26).**

OK

NG **Repair or replace harness or connector.**

Check and replace ECU.

BE

Actuator Control Cable Inspection

C
1. Check that the actuator, control cable and throttle link are properly installed and that the cable and link are connected correctly.
2. Check that the actuator and bell crank are operating smoothly.
3. Check that the cable is not loose or too tight.

Hint
1. If the control cable is very loose, the vehicle's loss of speed going uphill will be large.
2. If the control cable is too tight, the idle RPM will become high.

SERVICE SPECIFICATIONS

BE02W—0E

SERVICE DATA

DAYTIME RUNNING LIGHT RELAY (Wire harness side)	
Tester connection	Specified condition
2 — Ground (Ignition switch position: LOCK or ACC)	No voltage
2 — Ground (Ignition switch position: ON or START)	Battery positive voltage
6 — Ground (Constant)	Battery positive voltage
11 — Ground (Engine stop)	No voltage
11 — Ground (Engine Running)	Battery positive voltage
15 — Ground (Constant)	Battery positive voltage
18 — Ground (Brake fluid level warning position ON)	Battery positive voltage
TURN SIGNAL FLASHER	
Flashes / Minute	60 — 120
SPEEDOMETER (USING A SPEEDOMETER TESTER)	
Standard indication (km/h)	Allowable range (km/h)
20	17 — 24
40	38 — 46
60	57.5 — 67
80	77 — 88
100	96 — 109
120	115 — 130
140	134 — 151.5
160	153 — 173
Standard indication (mph)	Allowable range (mph)
20	18 — 24
40	38 — 44
60	58 — 66
80	78 — 88
100	98 — 110
120	118 — 132
TACHOMETER (ON—VEHICLE)	DC 13.5 V 20°C (68°F)
Standard indication (rpm)	Allowable range (rpm)
700	610 — 750
3,000	2,850 — 3,150
5,000	4,850 — 5,150
7,000	6,790 — 7,210
FUEL RECEIVER GAUGE (w/ Tachometer)	
Between terminals	Resistance Ω
A — B	Approx. 140~158
A — C	Approx. 233~271
B — C	Approx. 92~114
FUEL RECEIVER GAUGE (w/o Tachometer)	
Between terminals	Resistance Ω
A — B	Approx. 115~130
A — C	Approx. 208~244
B — C	Approx. 92~114

FUEL SENDER GAUGE (68L)	
Float position: mm (in.)	Resistance Ω
F Approx. 28.0 (1.102)	Approx. 3.0
1/2 Approx. 81.3 (3.201)	Approx. 32.5
E Approx. 163.9 (6.453)	Approx. 110.0
FUEL SENDER GAUGE (57L)	
Float position: mm (in.)	Resistance Ω
F Approx. 12.1 (0.476)	Approx. 3.0
1/2 Approx. 79.0 (3.110)	Approx. 32.5
E Approx. 153.3 (6.035)	Approx. 110.0
ENGINE COOLANT TEMPERATURE GAUGE (w/ Tachometer)	
Between terminals	Resistance Ω
A – B	Approx. 85~95
A – C	Approx. 158~192
B – C	Approx. 215~255
ENGINE COOLANT TEMPERATURE GAUGE (w/o Tachometer)	
Between terminals	Resistance Ω
A – B	Approx. 85~95
A – C	Approx. 158~192
B – C	Approx. 215~255
DOOR LOCK CONTROL RELAY (Wire harness side)	
Tester connection	Specified condition
2 – Ground (Constant)	Battery positive voltage
8 – Ground (Ignition switch position: LOCK or ACC)	No voltage
8 – Ground (Ignition switch position: ON)	Battery positive voltage
13 – Ground (Key unlock warning switch position: OFF) (Ignition key removed)	No voltage
13 – Ground (Key unlock warning switch position: ON) (Ignition key set)	Battery positive voltage
ANTENNA MOTOR CONTROL RELAY (Wire harness side)	
Tester connection	Specified condition
2 – Ground (Constant)	Battery positive voltage
5 – Ground (Ignition switch position: LOCK or ACC)	No voltage
5 – Ground (Ignition switch position: ON)	Battery positive voltage
6 – Ground (Ignition switch position: LOCK)	No voltage
6 – Ground (Ignition switch position: ACC or ON) (Radio switch and cassette OFF)	No voltage
6 – Ground (Ignition switch position: ACC or ON) (Radio switch of cassette ON)	Battery positive voltage
8 – Ground (Ignition switch position: LOCK)	No voltage
8 – Ground (Ignition switch position: ACC or ON) (Radio switch OFF or cassette ON)	No voltage
8 – Ground (Ignition switch position: ACC or ON) (Radio switch ON and cassette OFF)	Battery positive voltage
9 – Ground (Ignition switch position: LOCK or ACC)	No voltage
9 – Ground (Ignition switch position: ON)	Battery positive voltage

CRUISE CONTROL ECU (Wire harness side)	
24 – 26 (Constant)	Approx. 2.0 kΩ
25 – 26 (Actuator arm turned)	Resistance change even
10 – Ground (Brake pedal position: Released)	Approx. 38.0 Ω
10 – Ground (Brake pedal position: Depressed)	No continuity
18 – Ground (Control switch position: OFF)	No continuity
18 – Ground (Control switch position: RESUME / ACCEL)	Approx. 68.0 Ω
18 – Ground (Control switch position: SET / COAST)	Approx. 198.0 Ω
18 – Ground (Control switch position: CANCEL)	Approx. 418.0 Ω
14 – Ground (Ignition switch position: LOCK or ACC)	No voltage
14 – Ground (Ignition switch position: ON)	Battery positive voltage
15 – Ground (Constant)	Battery positive voltage
1 – Ground (Constant)	Battery positive voltage
16 – Ground (Brake pedal position: Released)	No voltage
16 – Ground (Brake pedal position: Depressed)	Battery positive voltage
20 – Ground (With ignition switch ON, speedsensor shaft turned)	Voltage changes repeatedly
CRUISE CONTROL ACTUATOR	
1 – 3	Approx. 2.0 kΩ
2 – 3 (The arm is moving from the closed to open position)	Approx. 0.5 to 1.8 kΩ

BODY

GENERAL INFORMATION ..... BO– 2
PRECAUTION ..... BO– 4
PREPARATION ..... BO– 5
FRONT BUMPER ..... BO– 6
HOOD ..... BO– 7
FRONT DOOR ..... BO– 8
WIPER AND WASHER ..... BO– 12
WINDSHIELD MOULDING ..... BO– 14
WHEEL ARCH MOULDING ..... BO– 15
WINDSHIELD ..... BO– 16
QUARTER WINDOW GLASS ..... BO– 20
BACK WINDOW GLASS ..... BO– 22
REMOVABLE ROOF ..... BO– 25
INSTRUMENT PANEL ..... BO– 27
ONE–TOUCH TAIL GATE ..... BO– 32
SEAT ..... BO– 34
SEAT BELT ..... BO– 38
SERVICE SPECIFICATIONS ..... BO– 41

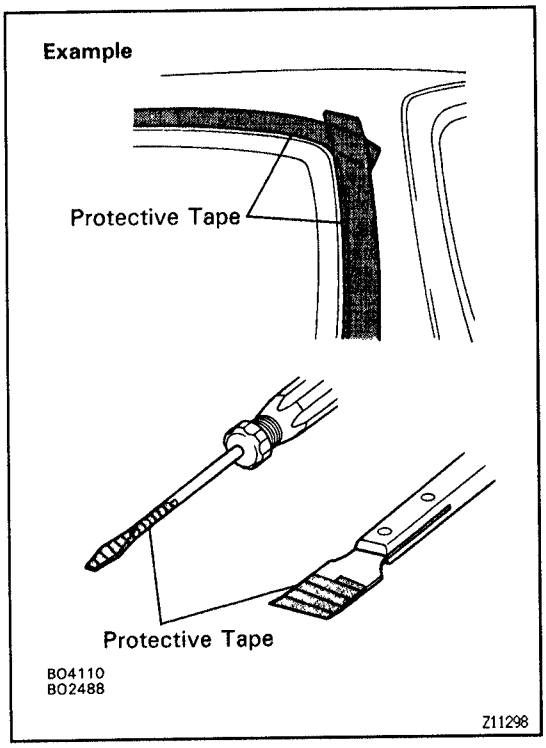

GENERAL INFORMATION

BO178-0E

HANDLING PRECAUTIONS

Taping

When it is possible that the body or parts may be scratched during the operation, apply protective tape before starting work.

Example:

1. Before starting work, apply protective tape to body surfaces around parts to be removed and installed.
2. Before prying parts loose with a screwdriver or scraper etc., apply protective tape to the tip of the tool to avoid scratching parts or painted surfaces of the body.

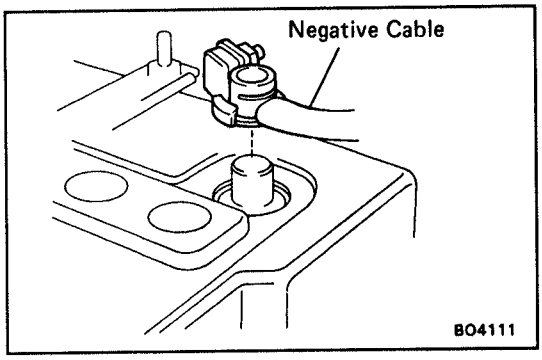

Battery

In order to prevent a short circuit while doing work on the electrical circuit such as disconnecting a connector, first turn off the ignition switch and disconnect the negative (−) terminal cable from the battery before starting work.

HINT: When battery voltage is required for operation of a functioning part, connect the cable to the battery when needed, and promptly disconnect it when no longer necessary.

CAUTION:

- **Work must be started after 90 seconds from the time the ignition switch is turned to the "LOCK" position and the negative (−) terminal cable is disconnected from the battery.**
- **To avoid erasing the memory of each memory system, never use a back−up power supply from outside the vehicle.**

Fitting Adjustments

When removing and installing body panels which have a preload value, after installation refer to the page containing the installation adjustment methods, and make adjustments according to the required specifications.

HINT: When making adjustments, do not completely loosen the bolts and nuts of the part being adjusted. Tighten them appropriately, and move the panels by hand to align them.

CLIPS

B001P–0N

The removal and installation methods of typical clips used in body parts are shown in the table below.
HINT: If the clip is damaged during the operation, always replace it with a new clip.

Shape (Example)	Removal/Installation
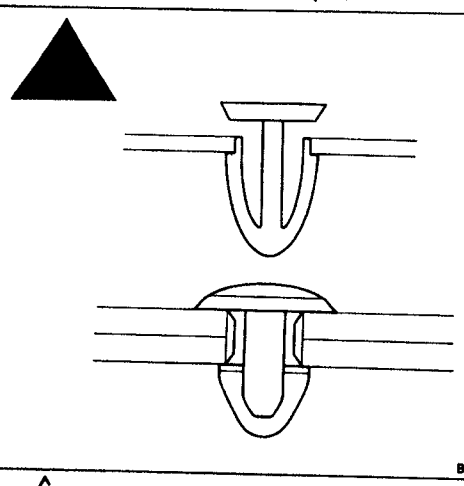 B04116	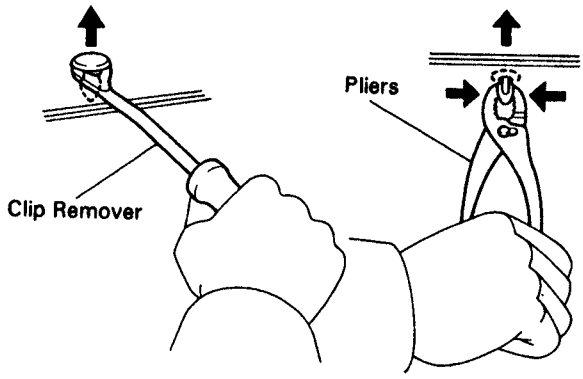 B04117
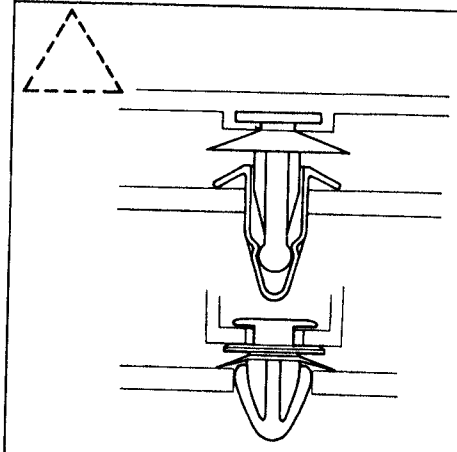 B04118	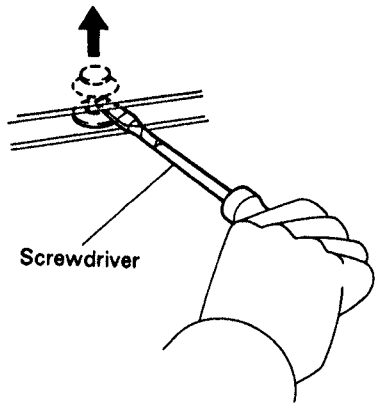 B04119
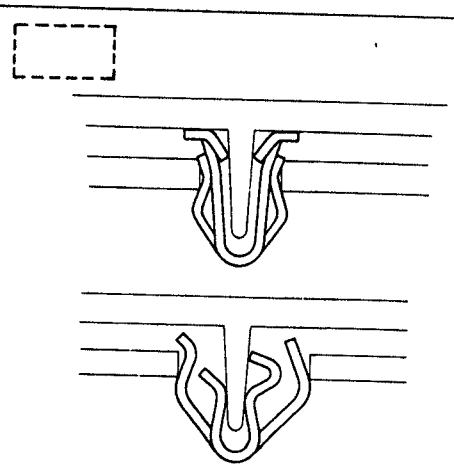 B04120	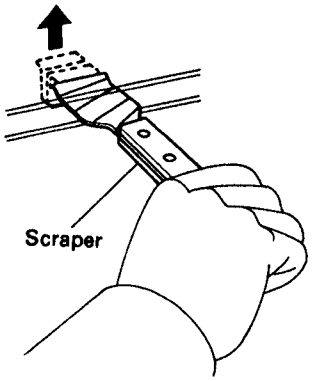 B04121

CLIPS (Cont'd)

Shape (Example)	Removal/Installation
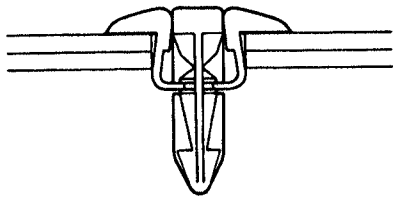 BO4122	Removal / Installation 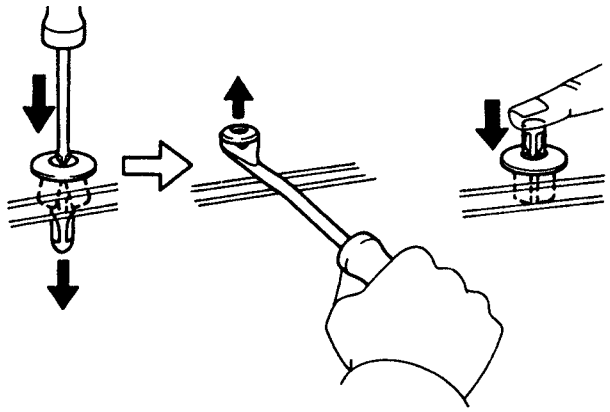 BO4123
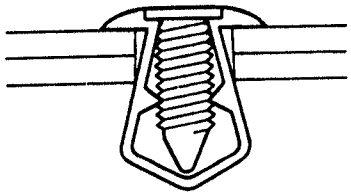 BO4124	Removal / Installation 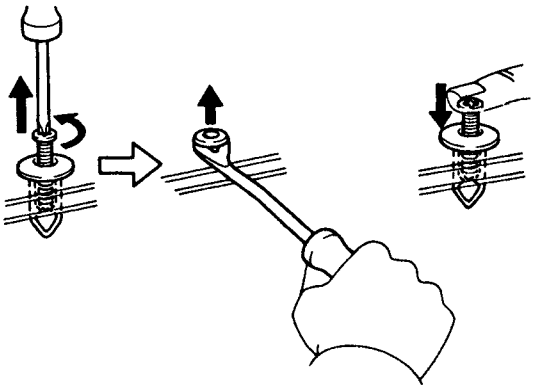 BO4125

V00012

BO

PRECAUTION

B024X–01

SRS (Supplemental Restraint System)

The TACOMA is equipped with an SRS (Supplemental Restraint System) such as the driver airbag. Failure to carry out service operation in the correct sequence could cause the SRS to unexpectedly deployed during servicing, possibly leading to a serious accident. Before servicing (including removal or installation of parts, inspection or replacement), be sure to read the precautionary notices in the RS section.

PREPARATION

SST(SPECIAL SERVICE TOOL)

BO1N9–03

	09812–00010 Door Hinge Set Bolt Wrench	

LUBRICANT

BO14S–04

Item	Capacity	Classification
MP grease	–	–

SSM (SPECIAL SERVICE MATERIALS)

BO18Y–02

08833–00030	Three cement black or equivalent	Windshield Moulding Wind shield Back Window Glass
08833–00070	Adhesive 1324, THREE BOND 1324 or equivalent	Front Door
08850–00065	Butyl Tape Set	Quarter Window
08850–00070	Windshield glass adhesive set No.15 or equivalent	Windshield (0–15 °C or 32–59 °F)
08850–00080	Windshield glass adhesive set No.35 or equivalent	Windshield (15–35 °C or 59–95 °F)
08850–00090	Windshield glass adhesive set No.45 or equivalent	Windshield (35–45 °C or 95–113 °F)

BO

Ambient temperature	Part No.	Part Name
0 – 15°C (32 – 59°F)	08850-00070	Windshield glass adhesive set No. 15
15 – 35°C (59 – 95°F)	08850-00080	Windshield glass adhesive set No. 35
35 – 45°C (95 – 113°F)	08850-00090	Windshield glass adhesive set No. 45

V00250

1. CHOOSE SUITABLE ADHESIVE SET

BO1QS–06

Use an adhesive set suitable for the ambient temperature.

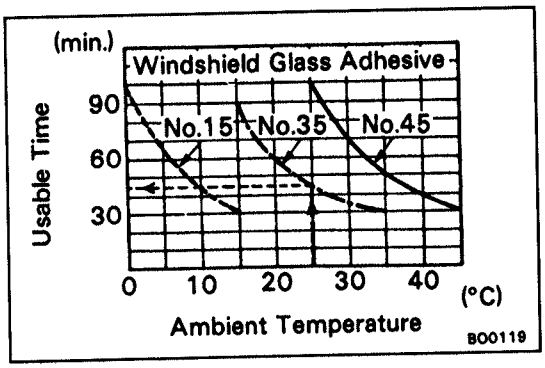

2. CHECK ADHESIVE USABLE TIME

After mixing main and hardening agents, finish glass installation within the specified time as shown.

Example: For glass installation in an ambient temperature of 25 °C (77 °F), apply adhesive set No. 35 within 45 minutes.

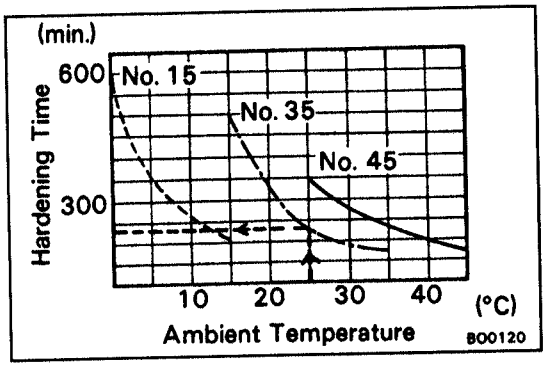

3. CHECK ADHESIVE HARDENING TIME

After main and hardening agents are mixed, leak tests should be made only after the hardening time has elapsed.

Example: The hardening time for adhesive set No. 35 with an ambient temperature of 25 °C (77 °F) is 2 and 1/2 hours.

NOTICE: Do not drive the vehicle until at least double the hardening time has elapsed.

FRONT BUMPER
COMPONENTS

B01LY-05

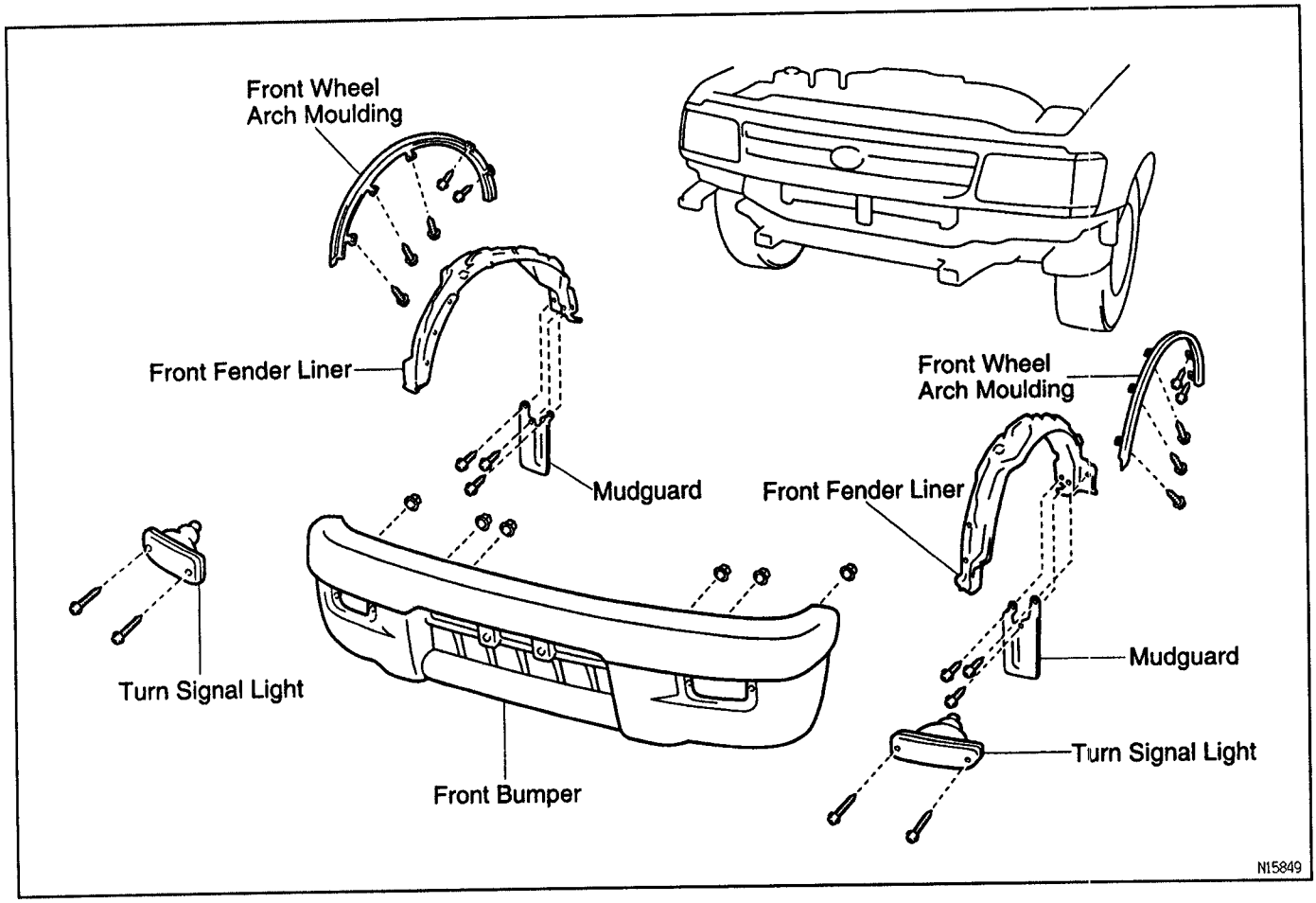

BO

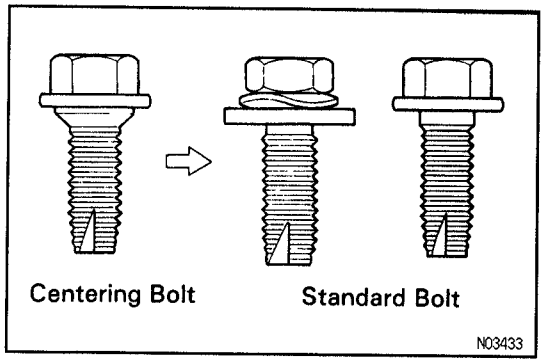

HOOD

HOOD ADJUSTMENT

BO18Z-02

HINT: Since the centering bolt is used as the hood hinge set bolt, the hood cannot be adjusted with it on. Substitute the bolt with the washer for the centering bolt.

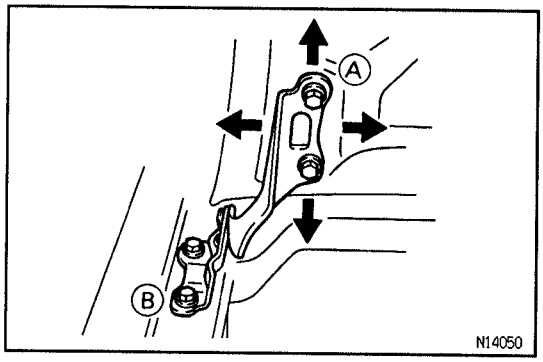

1. **ADJUST HOOD IN FORWARD/ REARWARD AND LEFT/ RIGHT DIRECTIONS**

Adjust the hood by loosening the hood side hinge bolts.

Torque:

Ⓐ: 13 N·m (130 kgf·cm, 10 ft·lbf)

Ⓑ: 18 N·m (180 kgf·cm, 13 ft·lbf)

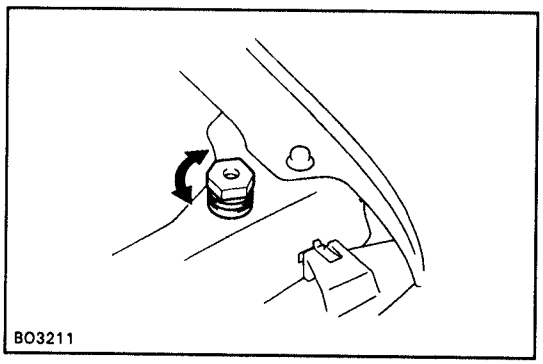

2. **ADJUST FRONT EDGE OF HOOD IN VERTICAL DIRECTION**

Adjust the hood by turning the cushions.

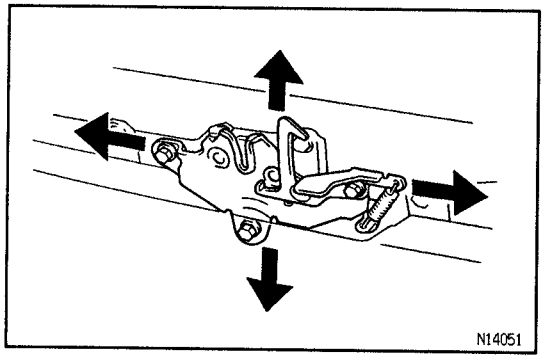

3. **ADJUST HOOD LOCK**

Adjust the lock by loosening the bolts.

Torque: 8 N·m (82 kgf·cm, 71 in.·lbf)

FRONT DOOR
COMPONENTS

BO1TG-02

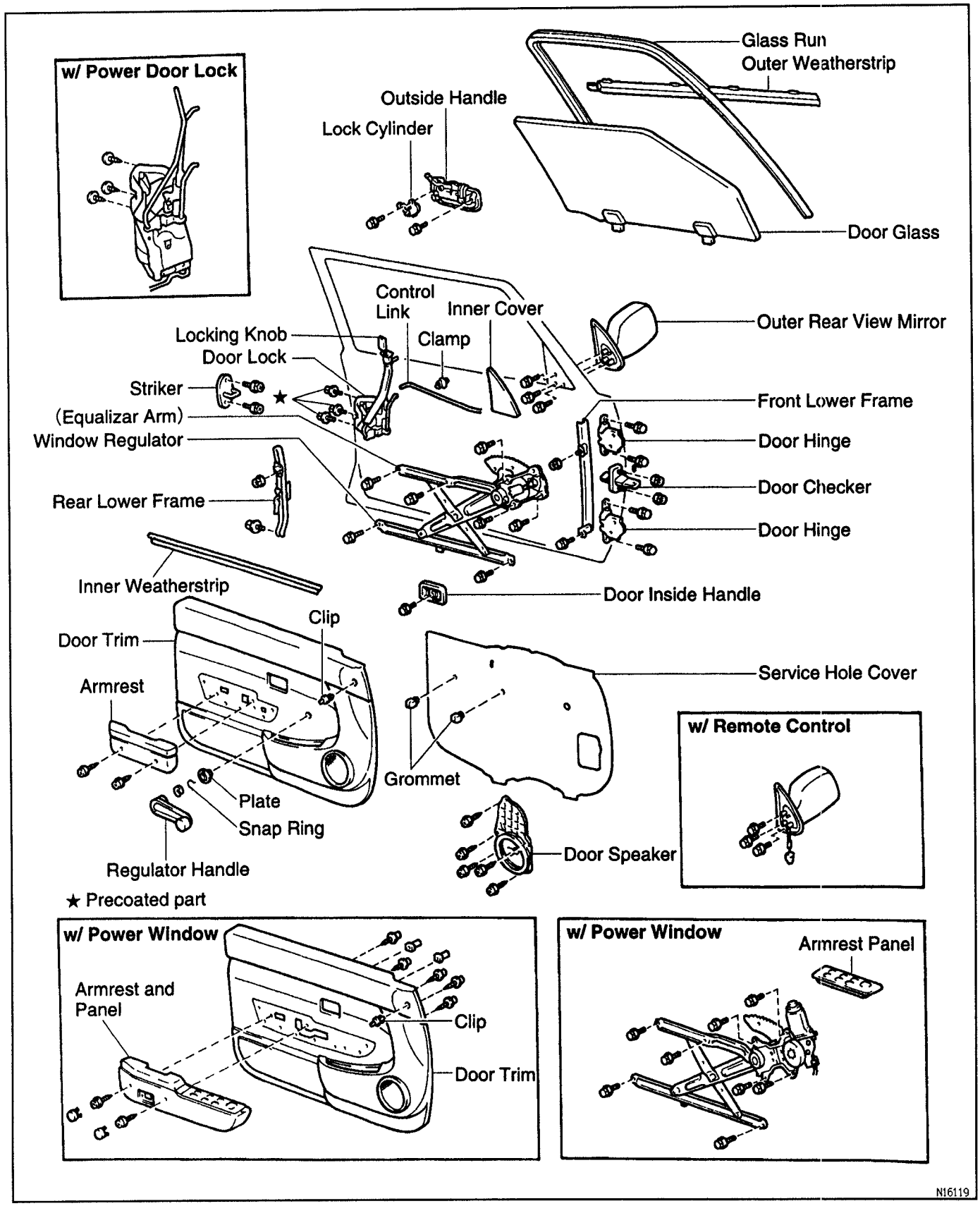

BO

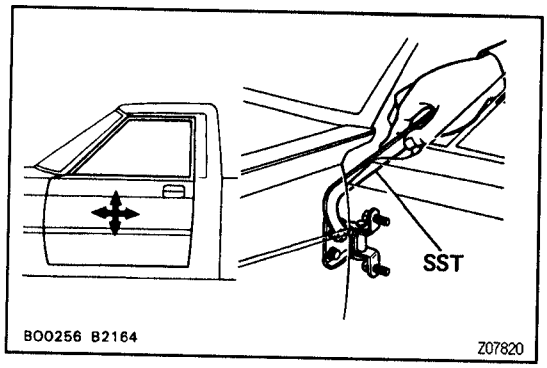

FRONT DOOR ADJUSTMENT

BO14C–04

1. **ADJUST DOOR IN FORWARD/ REARWARD AND VERTICAL DIRECTIONS**
Using SST, adjust the door by loosening the body side hinge bolts.
SST 09812–00010
Torque: 23 N·m (230 kgf·cm, 17 ft·lbf)

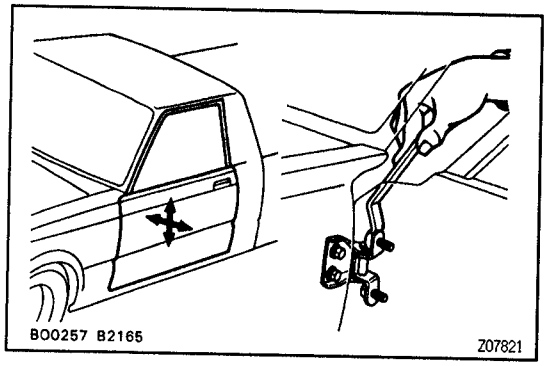

2. **ADJUST DOOR IN LEFT/ RIGHT AND VERTICAL DIRECTIONS**
Loosen the door side hinge bolts to adjust.
HINT: Substitute the standard bolt for the centering bolts. (See page BO–7)
Torque: 23 N·m (230 kgf·cm, 17 ft·lbf)

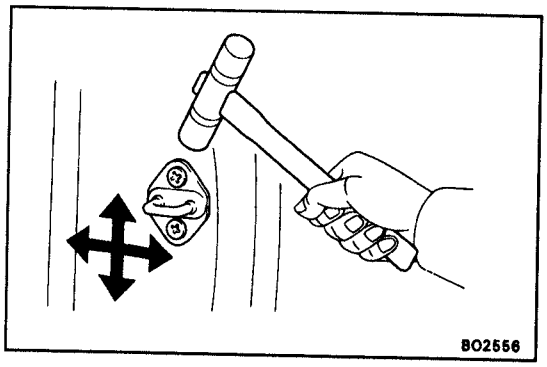

3. **ADJUST DOOR LOCK STRIKER**
(a) Check that the door fit and door lock linkages are adjusted correctly.
(b) Adjust the striker position by slightly loosening the striker mounting screws, and hitting the striker with a hammer.
(c) Tighten the striker mounting screws again.
Torque: 12 N·m (120 kgf·cm, 9.0 ft·lbf)

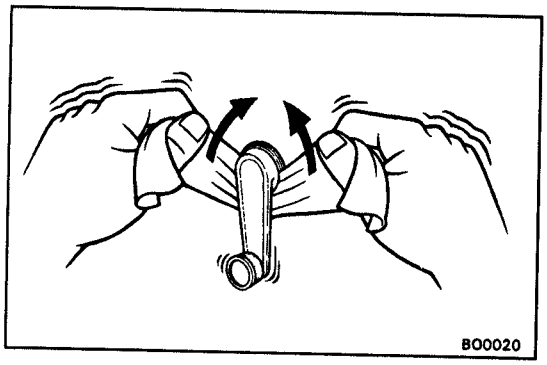

FRONT DOOR DISASSEMBLY

BO24Y–01

1. **w/o Power Window:**
REMOVE REGULATOR HANDLE
Pull off the snap ring with a cloth and remove the regulator handle and plate.
ASSEMBLY HINT: With door window fully closed, install the plate and regulator handle with the snap ring.

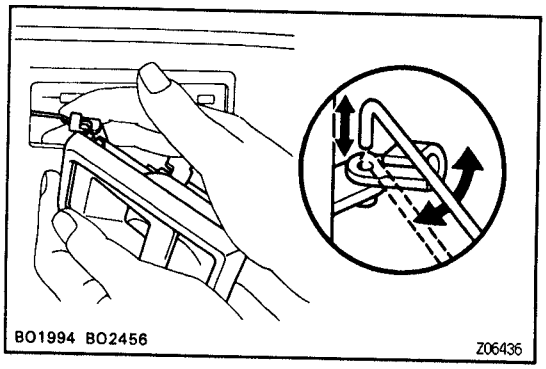

2. **REMOVE DOOR INSIDE HANDLE**
(a) Remove the screw and slide the handle forward.
(b) Disconnect the handle from the control link and remove the handle.
3. **REMOVE ARMREST**
w/o Power Window, w/o Wide Armrest:
Remove the 2 screws and door trim.
4. **REMOVE INNER COVER**
Using a screwdriver, remove the inner cover.
HINT: Tape the screwdriver tip before use.

BO

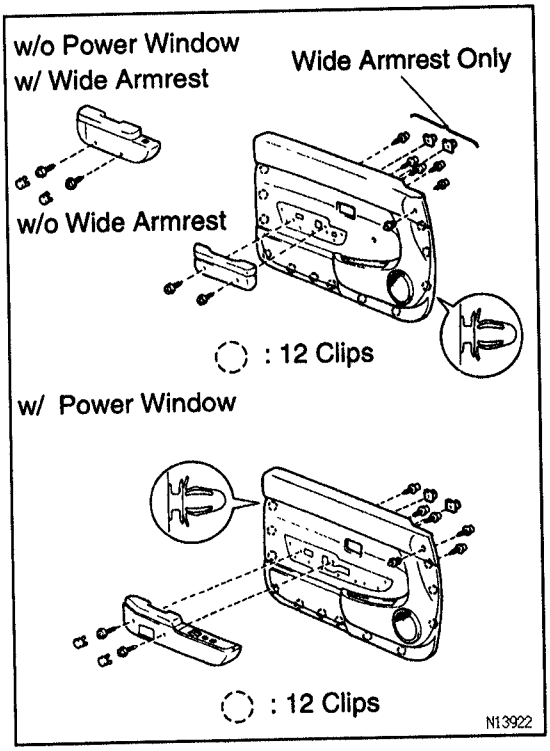

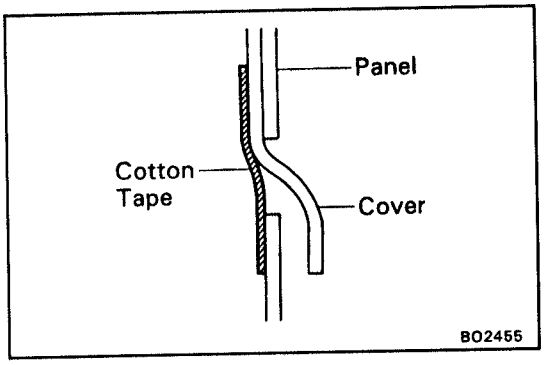

5. REMOVE DOOR TRIM

w/o Power Window:

(a) Remove the clip.

(b) w/ Wide Armrest:
Remove the 2 caps and 2 screws from the armrest.

(c) Insert a screwdriver between the retainer and door trim to pry it loose.

(d) Remove the 12 clips and door trim.

(e) w/ Wide Armrest:
Remove the 5 screws and armrest.
HINT: Tape the screwdriver tip before use.

w/ Power Window:

(a) Remove the clip.

(b) Remove the armrest panel by pulling upward, then disconnect the connectors.

(c) Remove the 2 caps and 2 screws.

(d) Insert a screwdriver between the retainer and door trim to pry it loose.

(e) Remove the 12 clips and door trim.

(f) Remove the 5 screws and armrest.
HINT: Tape the screwdriver tip before use.

6. REMOVE DOOR SPEAKER

(a) Disconnect the connector.

(b) Remove the 5 screws and speaker.

7. REMOVE SERVICE HOLE COVER

(a) Remove the 2 grommets.

(b) Remove the service hole cover.
ASSEMBLY HINT: Bring out the link and connector through the service hole cover.

8. REMOVE THESE PARTS:

(a) Outer rear view mirror

(b) Outer weatherstrip

(c) Glass run

(d) Front lower frame

(e) Door glass

(f) Rear lower frame

BO

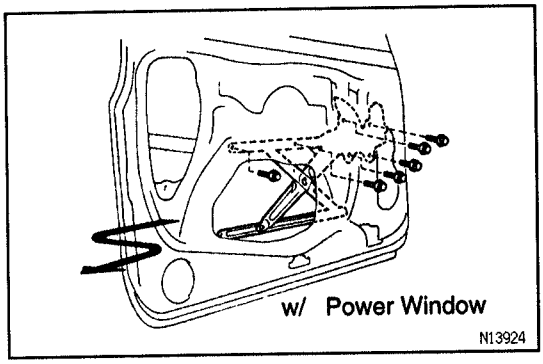

9. REMOVE WINDOW REGULATOR

(a) w/o Power Window:
Remove the 5 bolts and regulator.
Torque: 4.9 N·m (50 kgf·cm, 43 in.·lbf)
w/ Power Window:
Remove the 6 bolts and regulator.
Torque: 4.9 N·m (50 kgf·cm, 43 in.·lbf)

(b) Disconnect the connector.

ASSEMBLY HINT: Apply MP grease to the window regulator rollers.

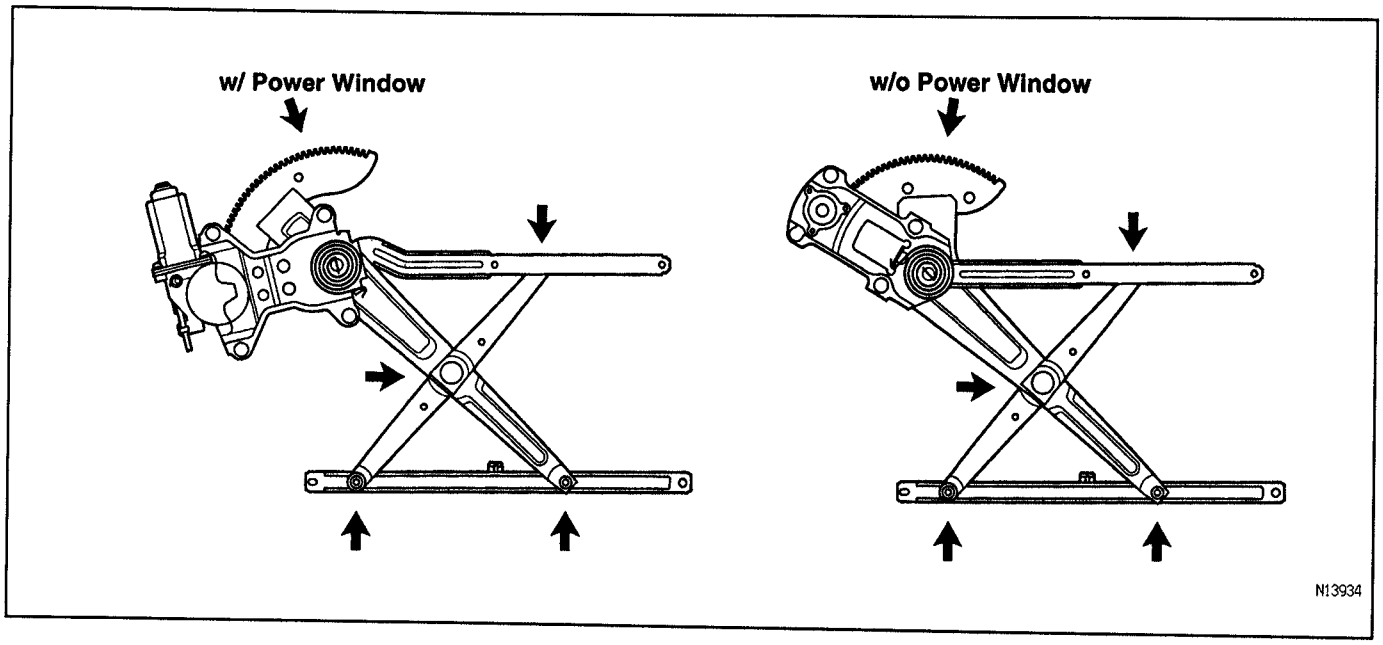

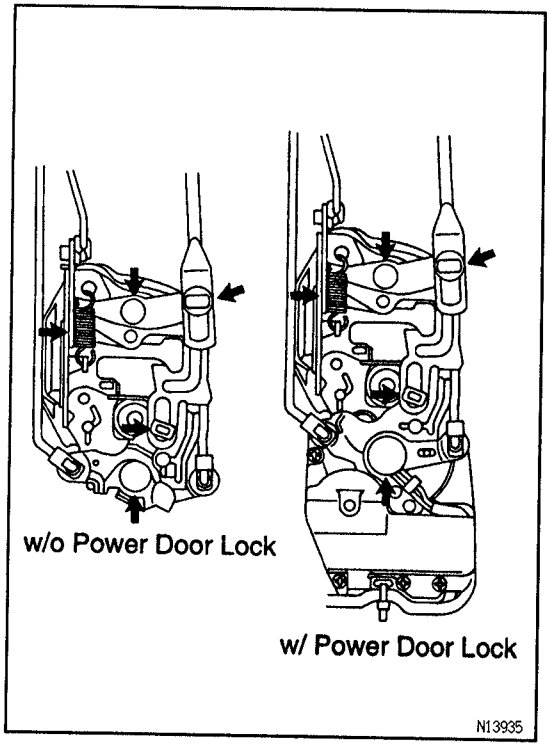

10. REMOVE DOOR LOCK

(a) Disconnect the 2 links from the outside handle.

(b) w/ Power Door Lock:
Disconnect the connector.

(c) Remove the 3 screws and door lock.
ASSEMBLY HINT: Apply adhesive to the 3 screws.
Part No.08833–00070, THREE BOND 1324 or equivalent.
Apply MP grease to the sliding and rotating parts of the door lock.

11. REMOVE OUTSIDE HANDLE

(a) Remove the 2 bolts.
Torque: 5.0 N·m (50 kgf·cm, 43 in.·lbf).

(b) Remove the lock cylinder.

BO

FRONT DOOR ASSEMBLY

B024Z–01

Assembly is in the reverse order of disassembly.

WIPER AND WASHER
COMPONENTS

BOGJU-05

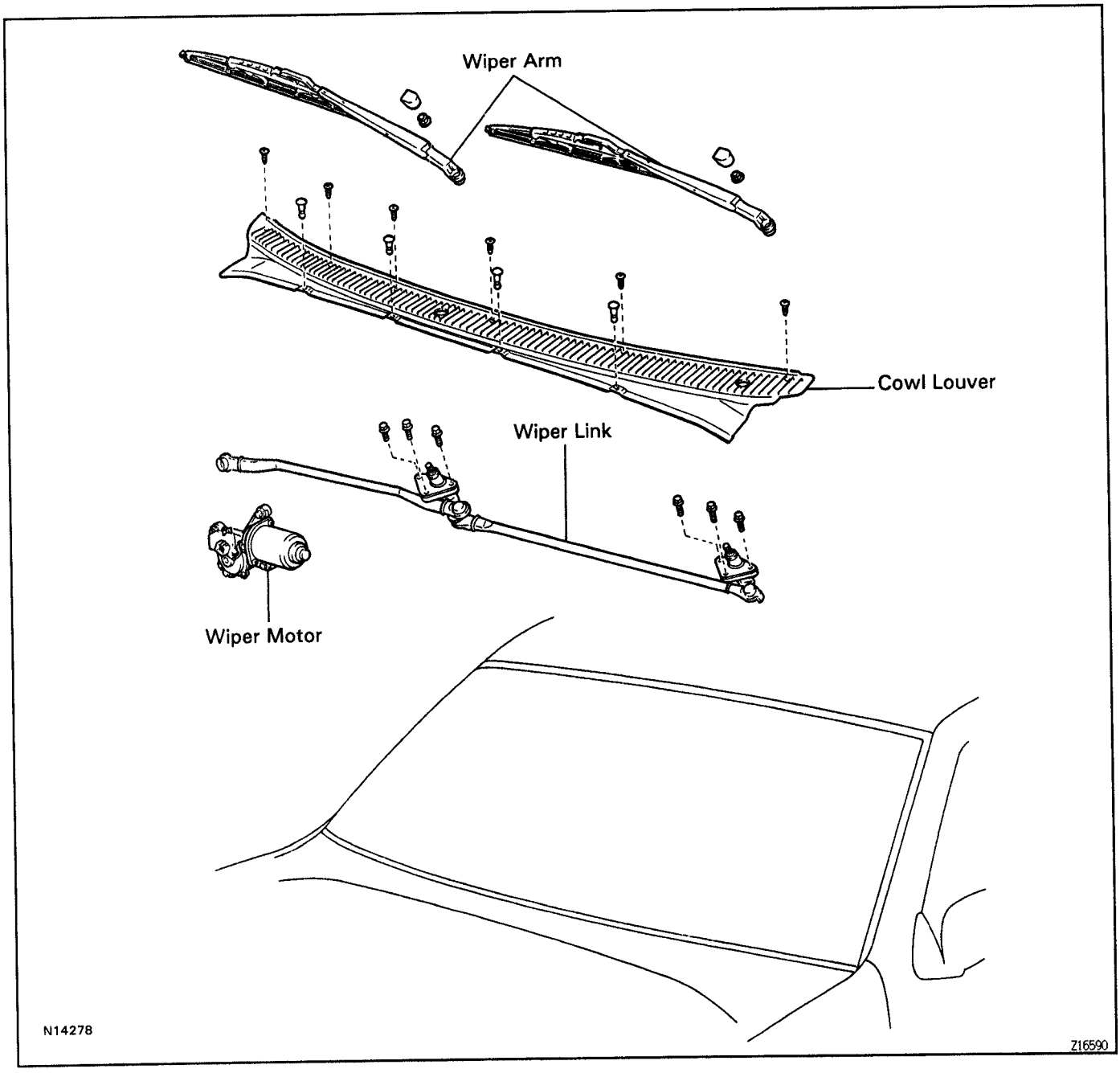

BO1T1-02

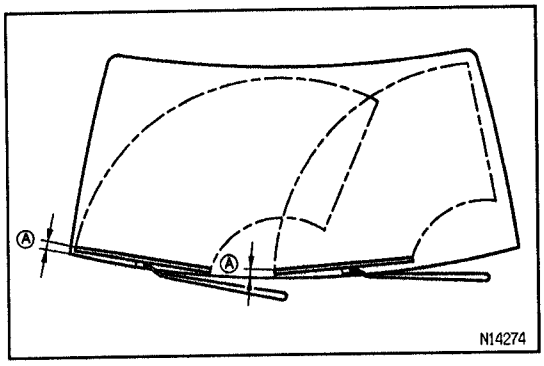

WIPER AND WASHER REMOVAL

1. **REMOVE THESE PARTS:**

(a) Wiper arms
Torque: 20 N·m (205 kgf·cm, 15 ft·lbf)

(b) Cowl louver
INSTALLATION HINT: Adjust the installation, position of the wiper arms to the positions, as shown.
ⒶApprox. 25 mm (5.90 in.)

BO

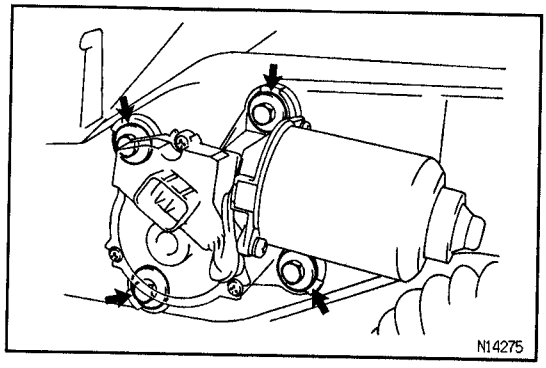

3. REMOVE THESE PARTS:

(a) Wiper motor
Torque: 5.6 N·m (55 kgf·cm, 47 in.·lbf)

(b) Wiper link
Torque: 5.6 N·m (55 kgf·cm, 47 in.·lbf)

(c) Window washer nozzle

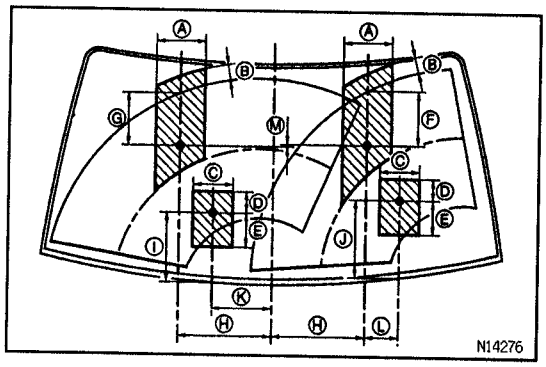

WASHER NOZZLE ADJUSTMENT

B01T2-02

1. INSPECT WASHER NOZZLE

(a) While operating the washer, check whether the upper point where the washer fluid hits the windshield and the surge area are within the range indicated by the hatched line.

Ⓐ Approx. 150 mm (5.90 in.)
Ⓑ Approx. 50 mm (1.97 in.)
Ⓒ Approx. 120 mm (4.72 in.)
Ⓓ Approx. 65 mm (2.55 in.)
Ⓔ Approx. 105 mm (4.13 in.)
Ⓕ Approx. 162 mm (6.37 in.)
Ⓖ Approx. 156 mm (6.14 in.)
Ⓗ Approx. 287.7 mm (11.32 in.)
Ⓘ Approx. 211.4 mm (8.32 in.)
Ⓙ Approx. 238.6 mm (9.39 in.)
Ⓚ Approx. 189 mm (7.44 in.)
Ⓛ Approx. 102.5 mm (4.03 in.)
Ⓜ Approx. 0 – 50 mm (0 – 1.96 in.)

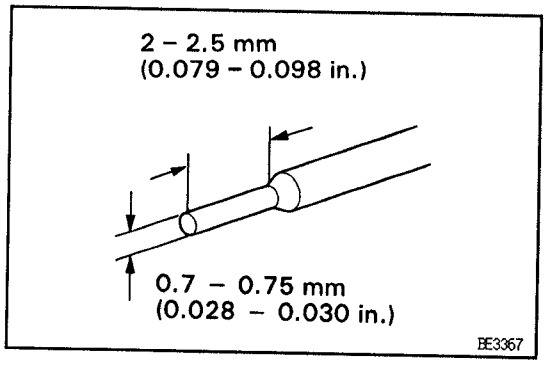

(b) Check if the lower point where the washer fluid hits the windshield is within the range of the wiping pattern the area of the glass which is wiped by the wiper blades.

2. ADJUST WASHER NOZZLE

Using a tool like that shown in the figure, change the direction of the nozzle hole to adjust the point where washer fluid strikes the windshield.

BO

WIPER AND WASHER INSTALLATION

B0250-01

Installation is in the reverse order of removal.

WINDSHIELD MOULDING

BO251-01

COMPONENTS

(See page BO−16)

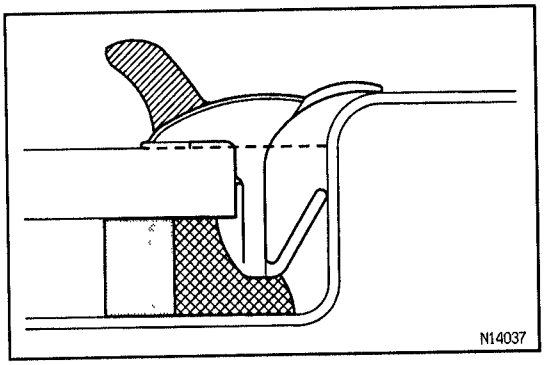

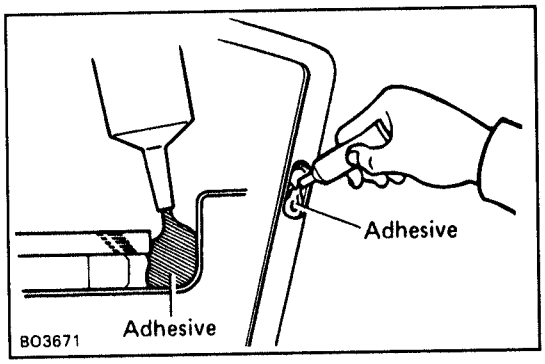

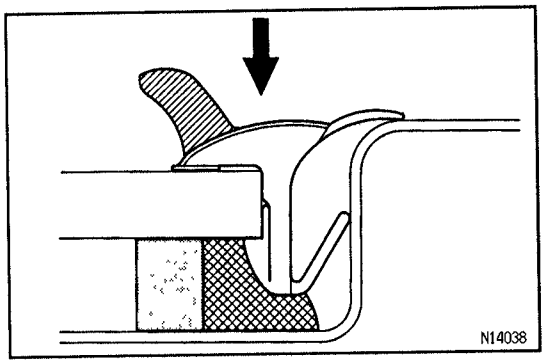

WINDSHIELD OUTSIDE UPPER MOULDING REMOVAL

BO1T3-02

1. **REMOVE THESE PARTS:**
(a) Wiper arms
(b) Cowl louver, weatherstrip and protector
2. **REMOVE WINDSHIELD OUTSIDE UPPER MOULDING**
Using a knife, cut off the moulding, as shown.
NOTICE: Do not damage the body with the knife.

WINDSHIELD OUTSIDE UPPER MOULDING INSTALLATION

BO1T4-02

1. **CUT ADHESIVE AT MOULDING INSTALLATION AREA**
Using a knife, cut off the old adhesive around the moulding installation area.
NOTICE: Do not damage the body with the knife.
2. **APPLY ADHESIVE AT MOULDING INSTALLATION AREA**
3. **INSTALL WINDSHIELD OUTSIDE UPPER MOULDING**
Place the moulding into the body and tap it by hand.
4. **INSTALL THESE PARTS:**
(a) Protector, weatherstrip and cowl louver
(b) Wiper arms
Torque: 20 N·m (205 kgf·cm, 15 ft·lbf)

BO

WHEEL ARCH MOULDING

COMPONENTS

B014L–04

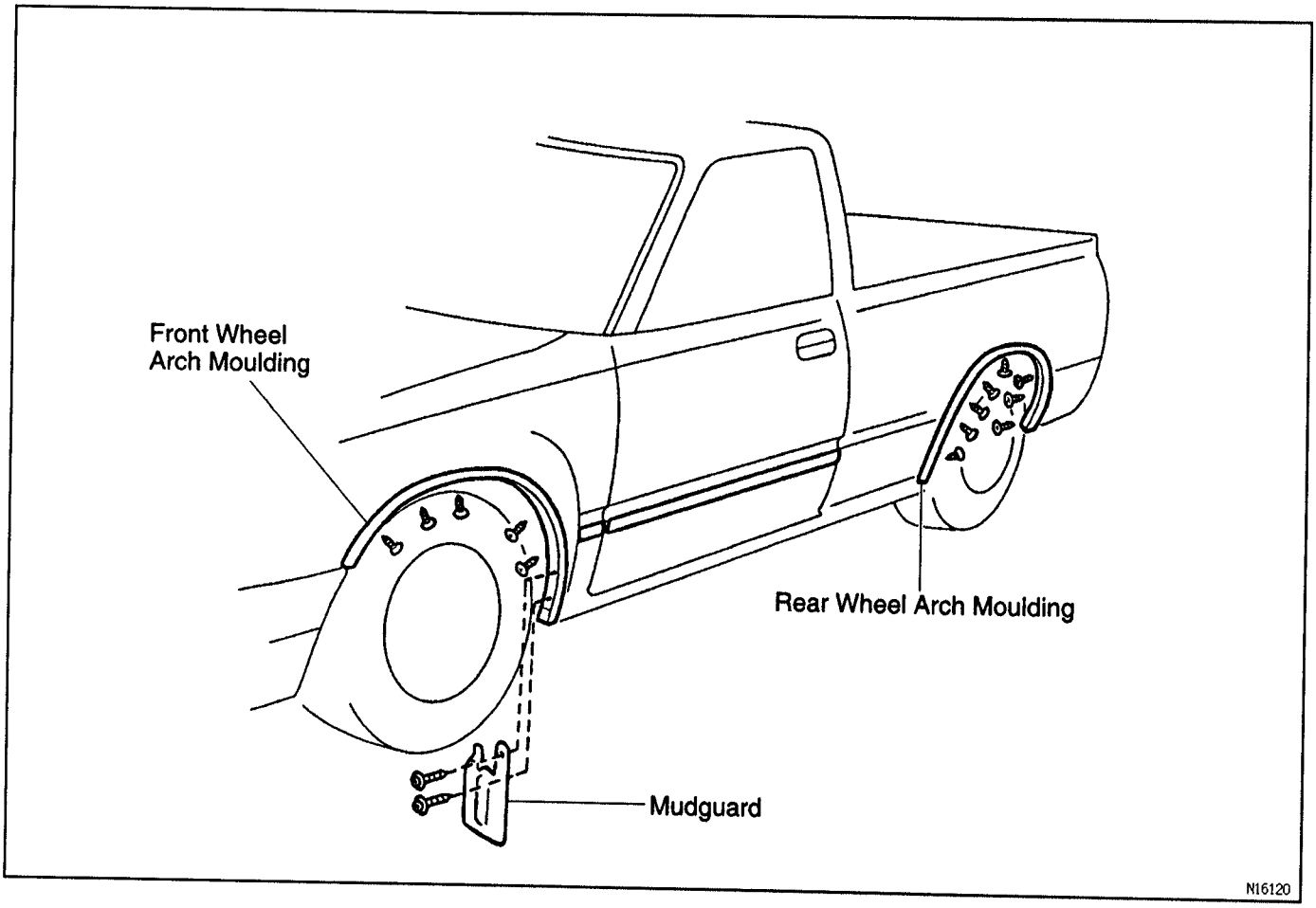

WHEEL ARCH MOULDING REMOVAL

B00K3–06

1. **REMOVE FRONT WHEEL ARCH MOULDING**

(a) Remove the 7 screws.

(b) Using a screwdriver, pry up the wheel arch moulding, and remove it.

HINT: Tape the screwdriver tip before use.

2. **REMOVE REAR WHEEL ARCH MOULDING**

(a) Remove the 8 screws.

(b) Using a screwdriver, pry up the wheel arch moulding, and remove it.

HINT: Tape the screwdriver tip before use.

BO

WHEEL ARCH MOULDING INSTALLATION

B0252–01

Installation is in the reverse order of removal.

WINDSHIELD
COMPONENTS

B014P-04

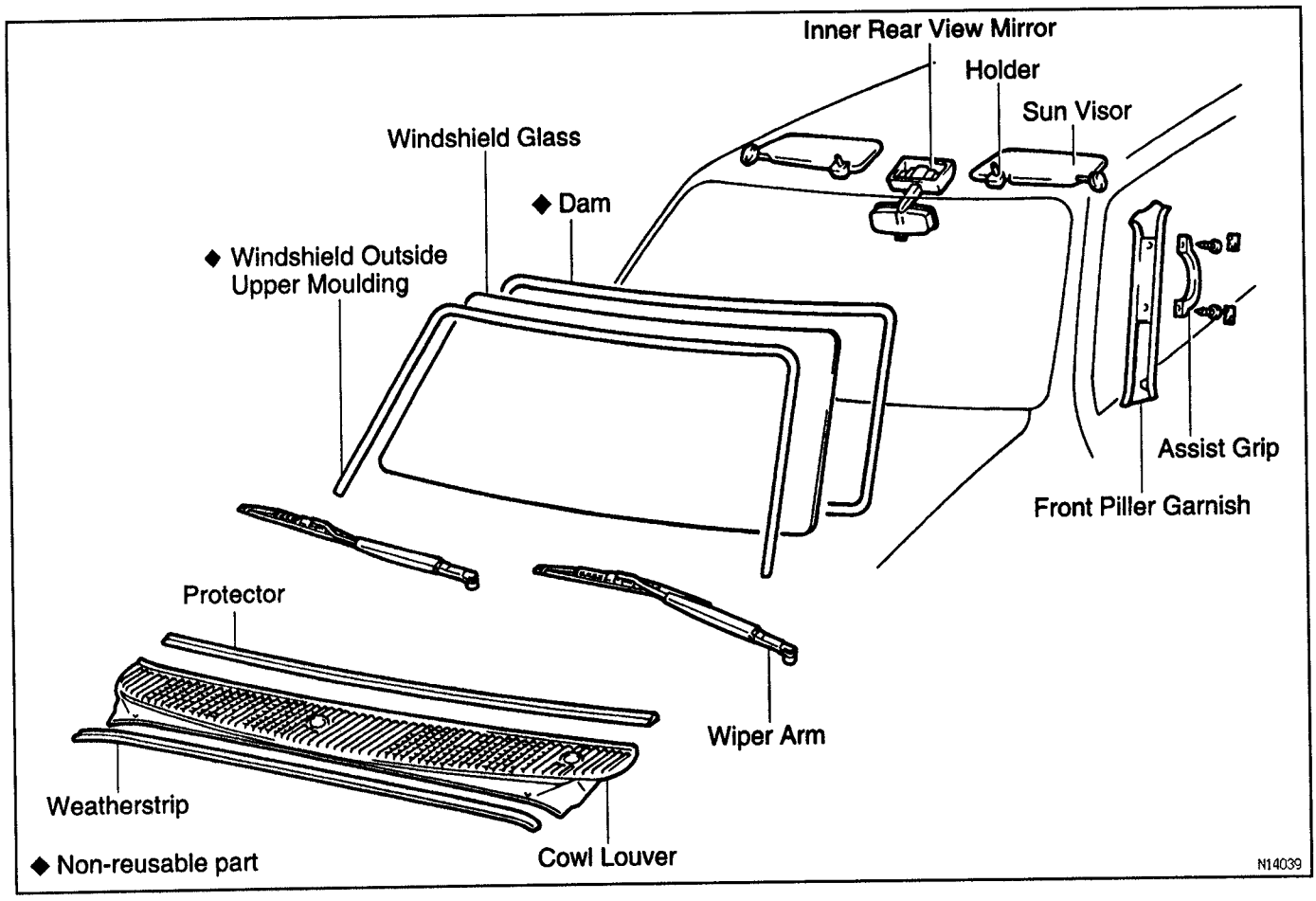

B01T8-02

WINDSHIELD REMOVAL

1. **REMOVE THESE PARTS:**
(a) Inner rear view mirror
(b) Sun visors and holders
(c) Assist grips
(d) Front pillar garnishes
2. **REMOVE WINDSHIELD OUTSIDE UPPER MOULDING**
(See page BO−14)
3. **REMOVE WINDSHIELD GLASS**
(a) Push piano wire through between the body and glass from the interior.
(b) Tie both wire ends to a wooden block or similar object.
HINT: Apply adhesive tape to the outer surface to keep the surface from being scratched.

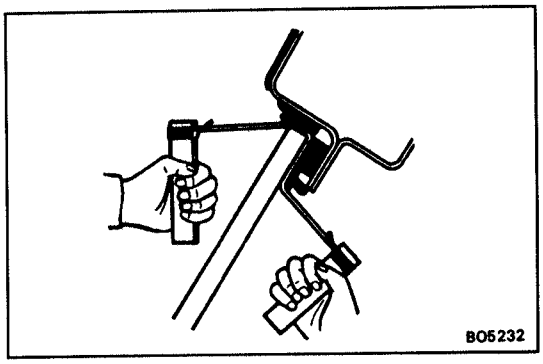

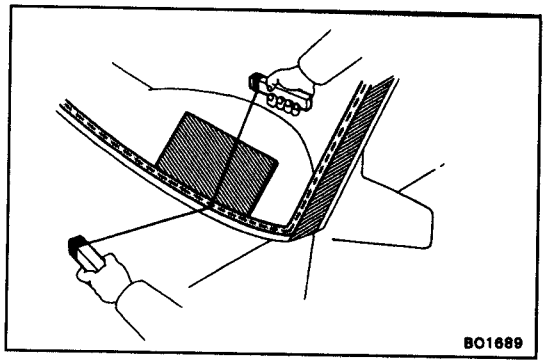

NOTICE: When separating the glass, take care not to damage the paint and interior and exterior ornaments. To prevent scratching the safety pad when removing the windshield, place a plastic sheet between the piano wire and safety pad.

(c) Cut the adhesive by pulling the piano wire around it.

(d) Remove the glass.

NOTICE: Leave as much of the adhesive on the body as possible when cutting off the glass.

WINDSHIELD INSTALLATION

BO1T6-02

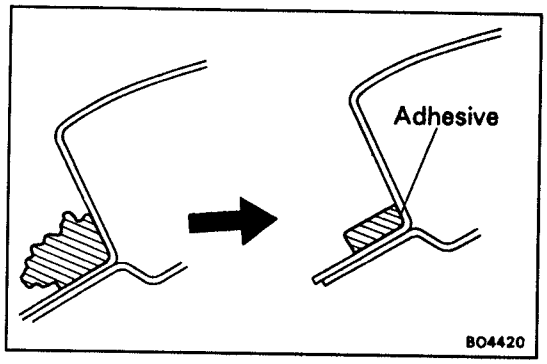

1. CLEAN AND SHAPE CONTACT SURFACE OF BODY

(a) Using a knife, cut away any rough areas on the body.
HINT: Leave as much of the adhesive on the body as possible.

(b) Clean the cutting surface of the adhesive with a piece of shop rag saturated in cleaner.
HINT: Even if all the adhesive has been removed, clean the body.

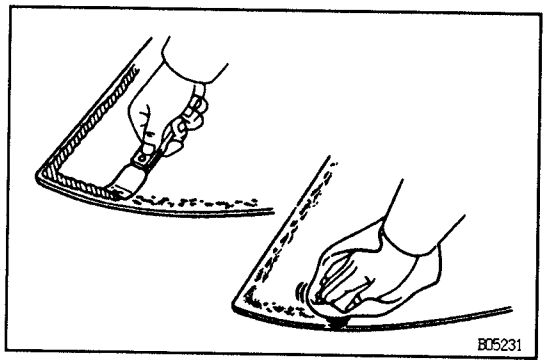

2. CLEAN REMOVED GLASS

(a) Using a scraper, remove the adhesive sticking to the glass.

(b) Clean the glass with cleaner.
NOTICE: Do not touch the glass after cleaning it.

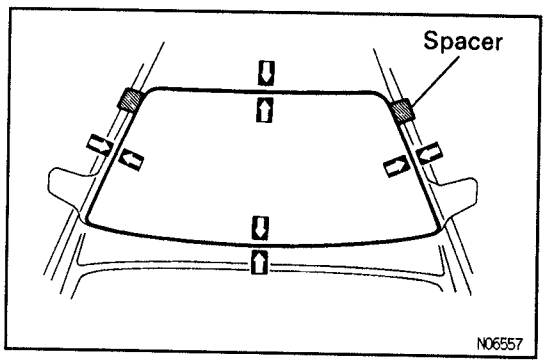

3. POSITION GLASS

(a) Place the glass in correct position.

(b) Check that all contacting parts of the glass rim are perfectly even and do not make contact with the spacers.

(c) Place reference marks between the glass and body.

(d) Remove the glass.

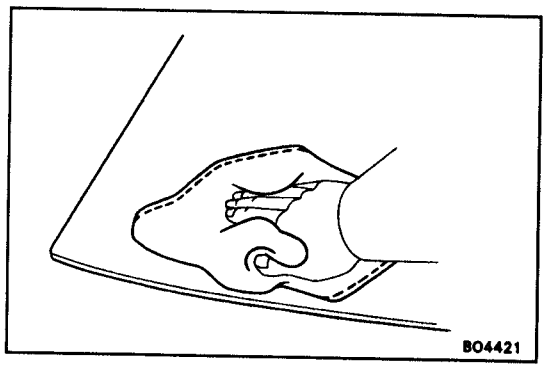

4. CLEAN CONTACT SURFACE OF GLASS

Using a cleaner, clean the contact surface black—colored area around the entire glass rim.
NOTICE: Do not touch the glass face after cleaning it.

QUARTER WINDOW GLASS

B014Y-04

COMPONENTS

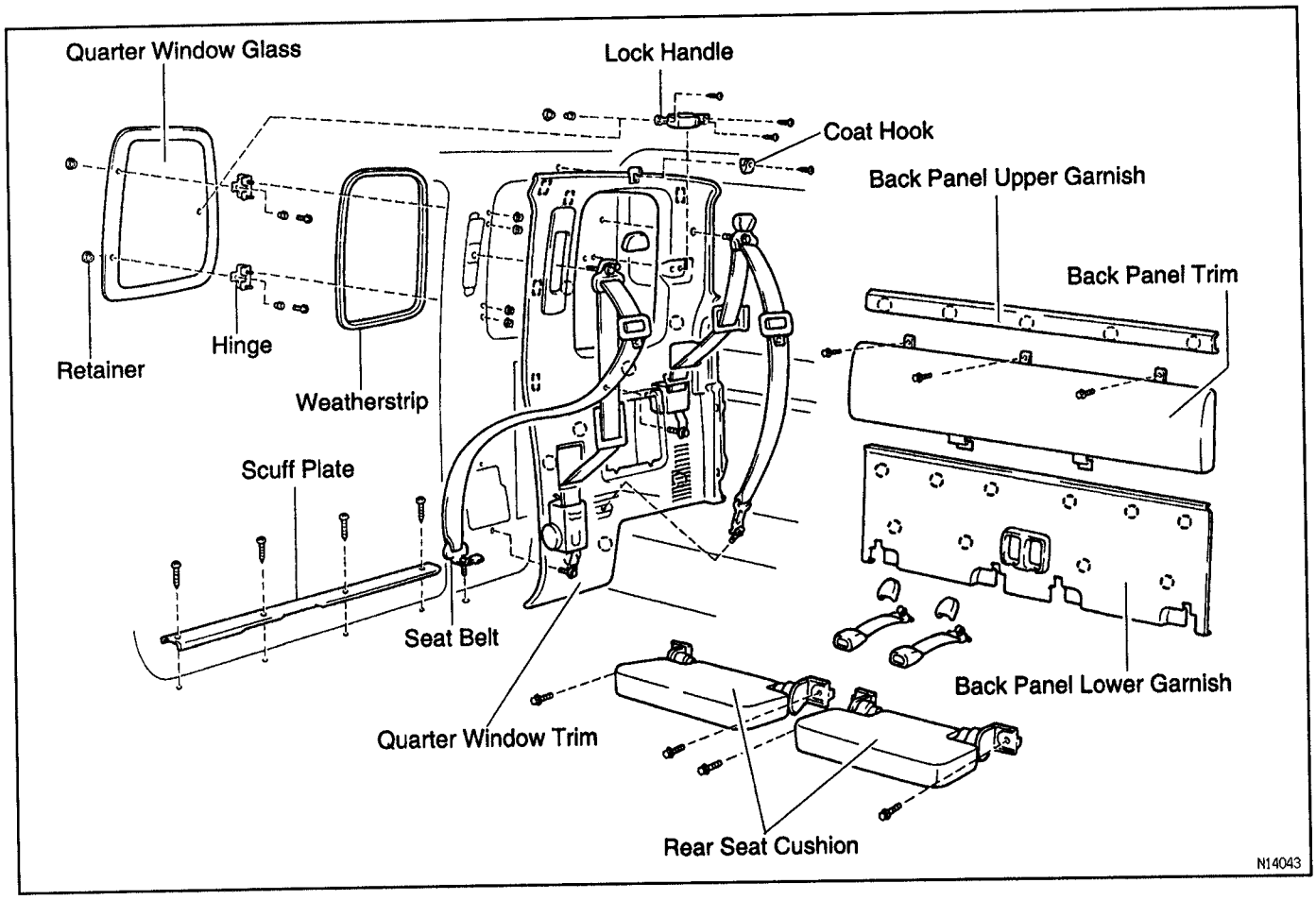

B01T7-02

QUARTER WINDOW GLASS REMOVAL

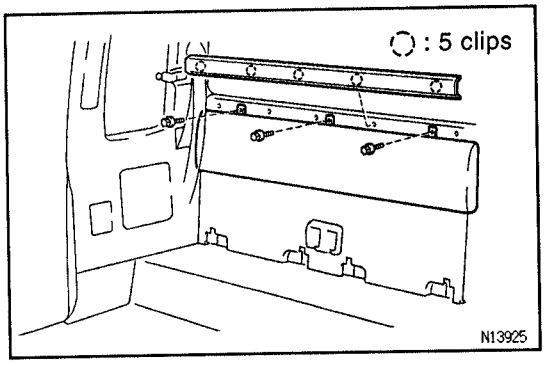

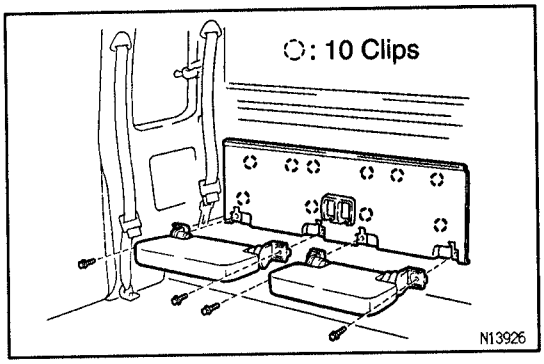

1. **REMOVE DOOR SCUFF PLATE**
   Remove the 4 screws and plate.
2. **REMOVE BACK PANEL UPPER GARNISH AND BACK PANEL TRIM**
   (a) Using a screwdriver, remove the garnish.
   (b) Remove the 3 bolts and trim.
   HINT: Tape the screwdriver tip before use.
3. **REMOVE BACK PANEL LOWER GARNISH**
   Using a screwdriver, remove the garnish.
   HINT: Tape the screwdriver tip before use.
4. **REMOVE REAR SEAT CUSHION**
   Remove the 4 bolts and rear seat cushions.
5. **REMOVE SEAT BELT**
   Remove the 4 bolts, seat belt anchor and belt guide.
   Torque: 43 N·m (440 kgf·cm, 32 ft·lbf)

BO

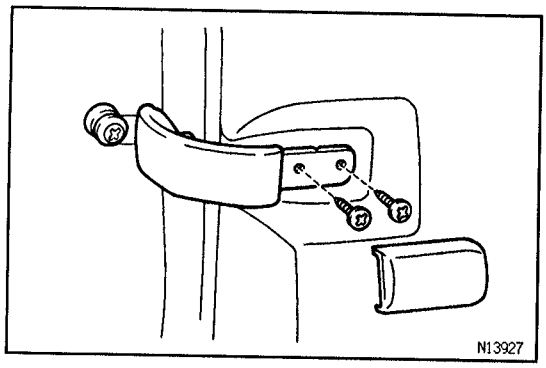

6. REMOVE LOCK HANDLE

(a) Using a screwdriver, remove the cover.
(b) Remove the 2 screws and lock handle.
HINT: Tape the screwdriver tip before use.

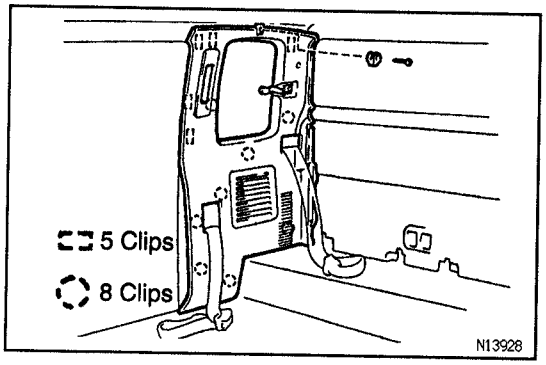

7. REMOVE COAT HOOK

Remove the screw and coat hook.

8. REMOVE QUARTER TRIM

Remove the 13 clips and quarter trim.

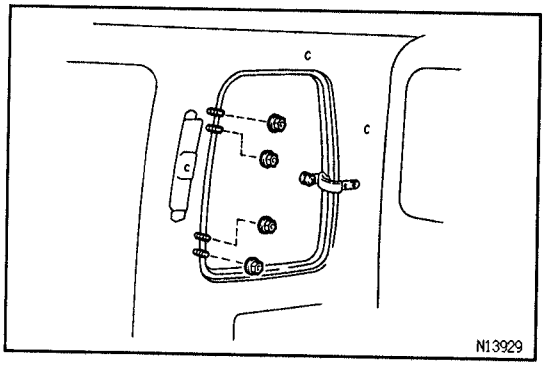

9. REMOVE QUARTER WINDOW GLASS

Remove the 4 nuts and quarter window glass.

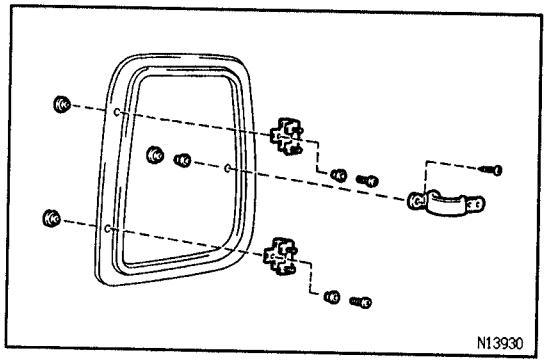

QUARTER WINDOW GLASS REPLACEMENT

BO1QW-03

REMOVE THESE PARTS:

(a) Lock handle
(b) Hinge

QUARTER WINDOW GLASS INSTALLATION

BO2S3-01

Installation is in the reverse order of removal.

BACK WINDOW GLASS
COMPONENTS

BOOK8-05

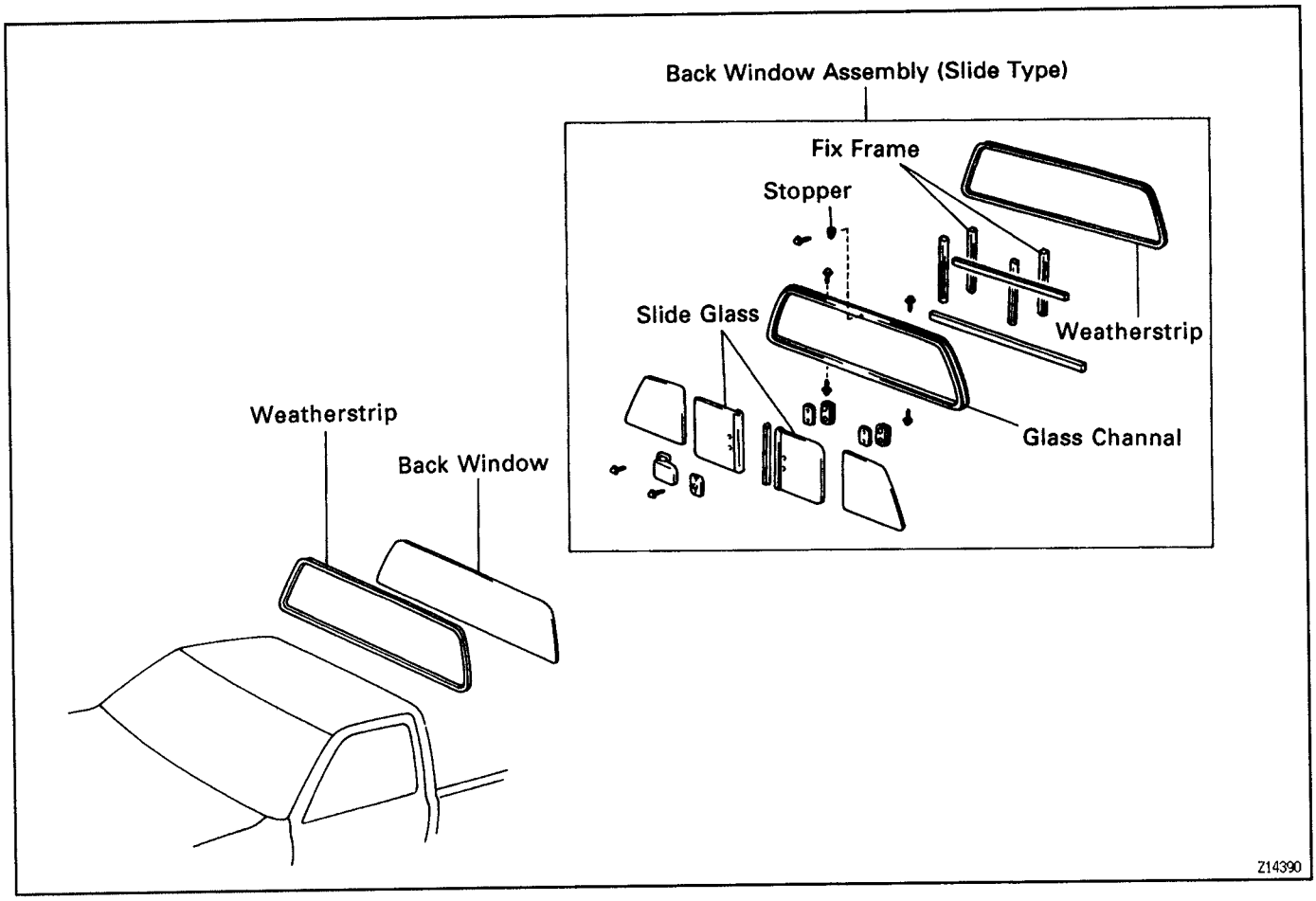

BOOK8-06

BACK WINDOW GLASS REMOVAL

REMOVE BACK WINDOW GLASS WITH WINDOW FRAME

(a) Using a screwdriver, loosen the weatherstrip from the body.

NOTICE: Be careful not to damage the body paint.

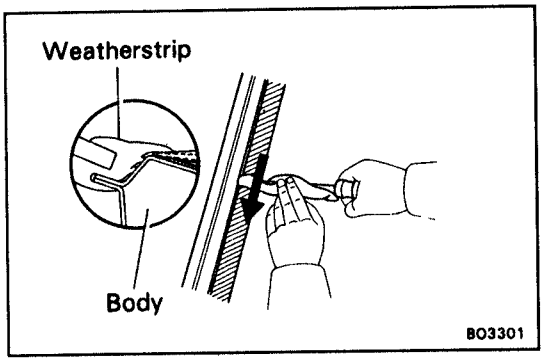

(b) Pry the lip of the weatherstrip outward from the interior part of the body flange.

(c) Pull the glass outwards, and remove it with the weatherstrip.

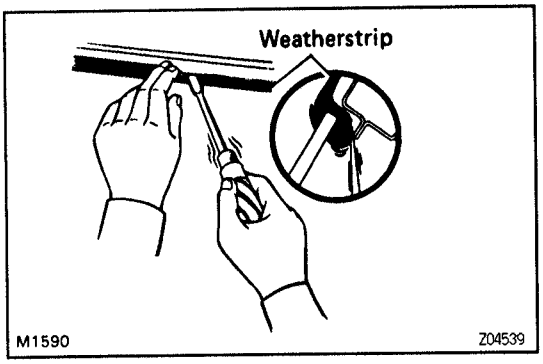

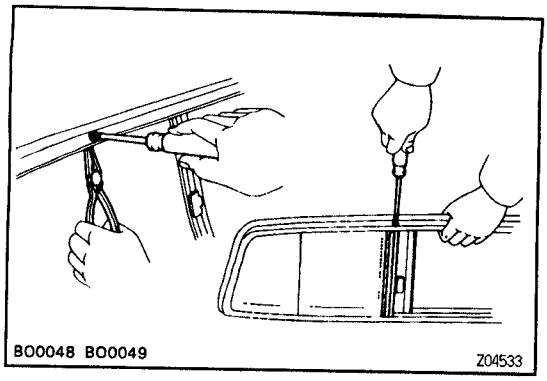

BACK WINDOW GLASS DISASSEMBLY BOOKA–07

Slide glass type:

1. **REMOVE THESE PARTS:**

(a) Stopper
(b) Fix frames

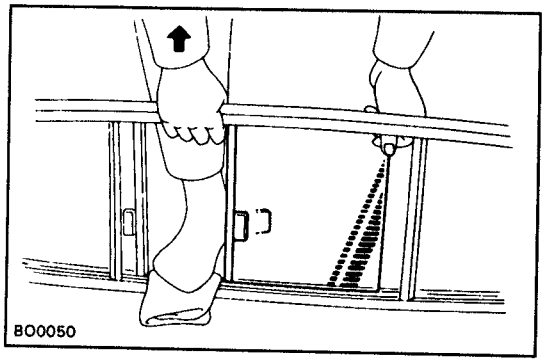

2. **REMOVE SLIDE GLASS**

Pull apart the channels and remove the 2 slide glass panes at the center area of the glass channel.

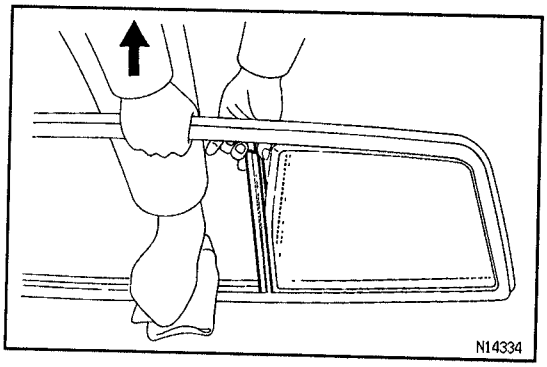

3. **REMOVE NON–SLIDE GLASS**

(a) Pull apart the channels and remove the 2 fix frames, as shown.

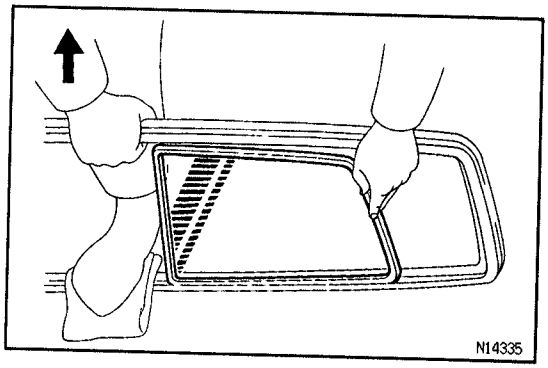

(b) Pull apart the channels and remove the 2 non–slide glass panes, as shown.

ASSEMBLY HINT: Apply soapy water to the contact surface of the weatherstrip and glass channel flange.

BO

BACK WINDOW GLASS ASSEMBLY BO254–01

Assembly is in the reverse order of disassembly.

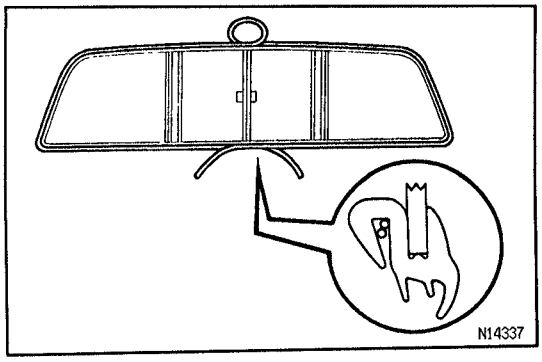

BACK WINDOW GLASS INSTALLATION

BO0KC–07

1. INSTALL BACK WINDOW GLASS WITH WINDOW FRAME

(a) Install the working cord to the frame, as shown.

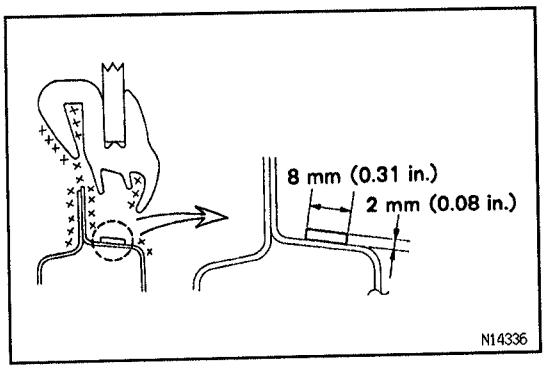

(b) Apply soapy water to the contact surface of the body and the weatherstrip lip.

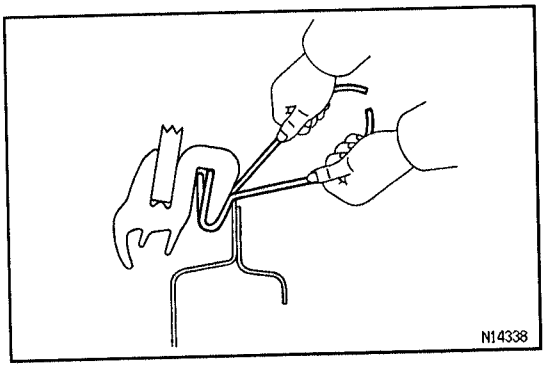

(c) Hold the glass in position on the body.

(d) Install the glass by pulling the cord from the room side, while pushing on the outside of the weatherstrip with your open hand.

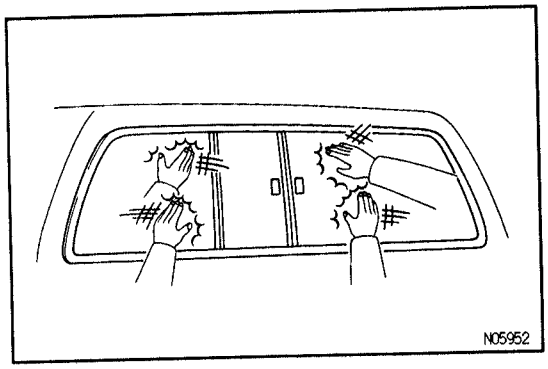

(e) To make the glass fit in place, tap from the outside with your open hand.

2. INSPECT FOR LEAKS AND REPAIR

(a) Perform a leak test after the hardening time has elapsed.

(b) Seal any leak with sealant.
Part No. 08833–00030 or equivalent

REMOVABLE ROOF
COMPONENTS

B0151-04

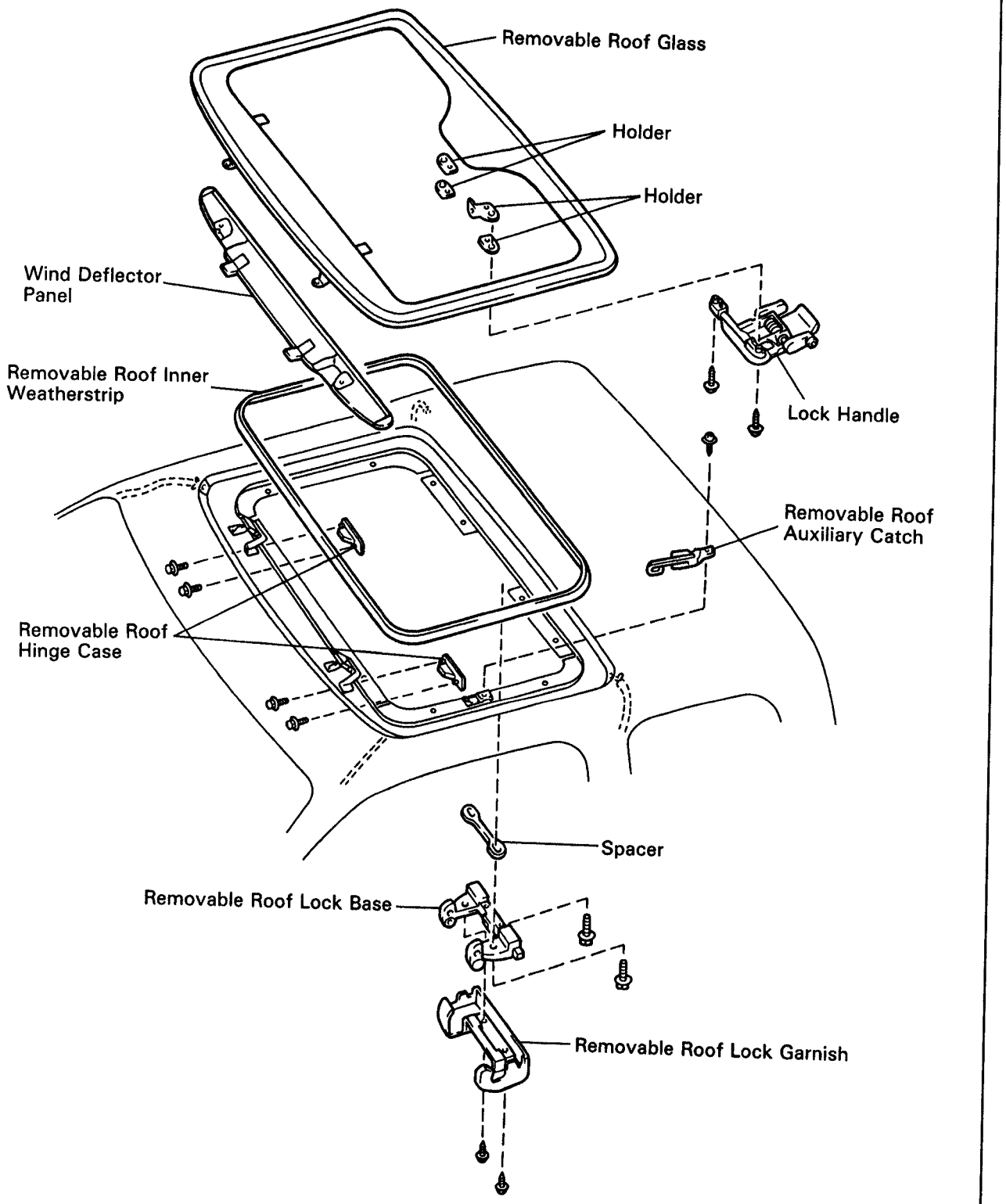

BO256-01

REMOVABLE ROOF REMOVAL

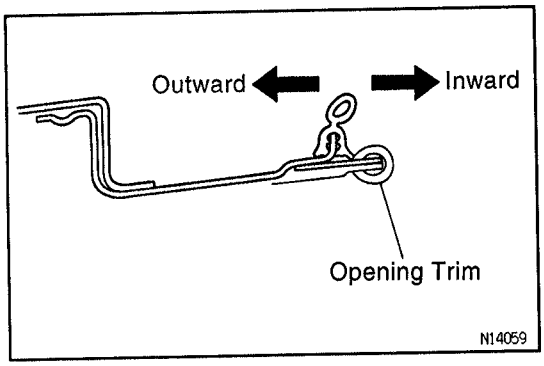

1. **REMOVE REMOVABLE ROOF INNER WEATHERSTRIP**
2. **REMOVE REMOVABLE ROOF AUXILIARY CATCH**

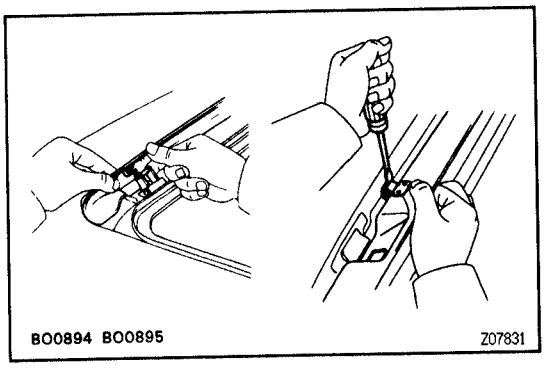

3. **REMOVE WIND DEFLECTOR PANEL**
(a) Remove the 2 outside deflector clips on the left and right sides.
(b) Remove the 2 inside deflector clips on the left and right side while prying it with a screwdriver.
HINT: Tape the screwdriver tip before use.
4. **REMOVE REMOVABLE ROOF LOCK GARNISH**

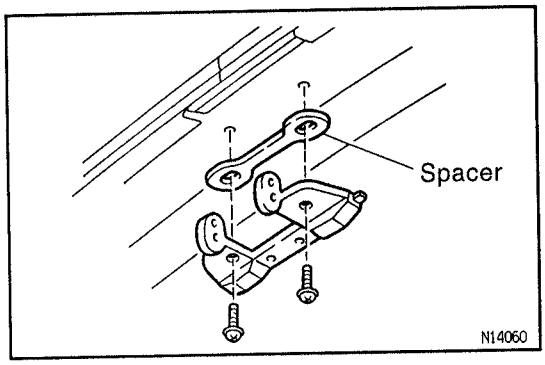

5. **REMOVE REMOVABLE ROOF LOCK BASE**
(a) Remove the 2 screws and lock base.
Torque: 6 N·m (60 kgf·cm, 52 in.·lbf)
(b) Remove the lock base and spacer.
6. **REMOVE REMOVABLE ROOF HINGE CASE**
Remove the 2 bolts and the hinge case.
Torque: 3.5 N·m (35 kgf·cm, 30 in.·lbf)

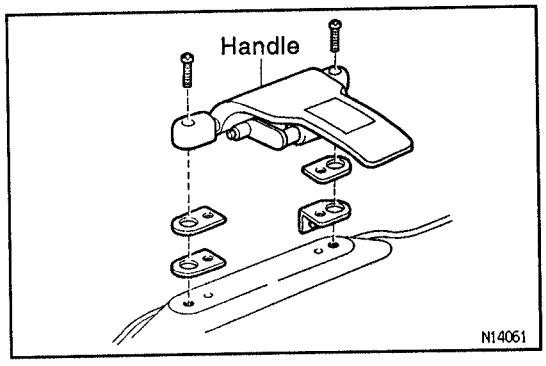

7. **REMOVE LOCK HANDLE AND HOLDER**
Remove the lock handle and holder with 2 bolts.
Torque: 3 N·m (30 kgf·cm, 26 in.·lbf)

BO256-01

REMOVABLE ROOF INSTALLATION

Installation is in the reverse order of removal.

INSTRUMENT PANEL
COMPONENTS

BO1T0-02

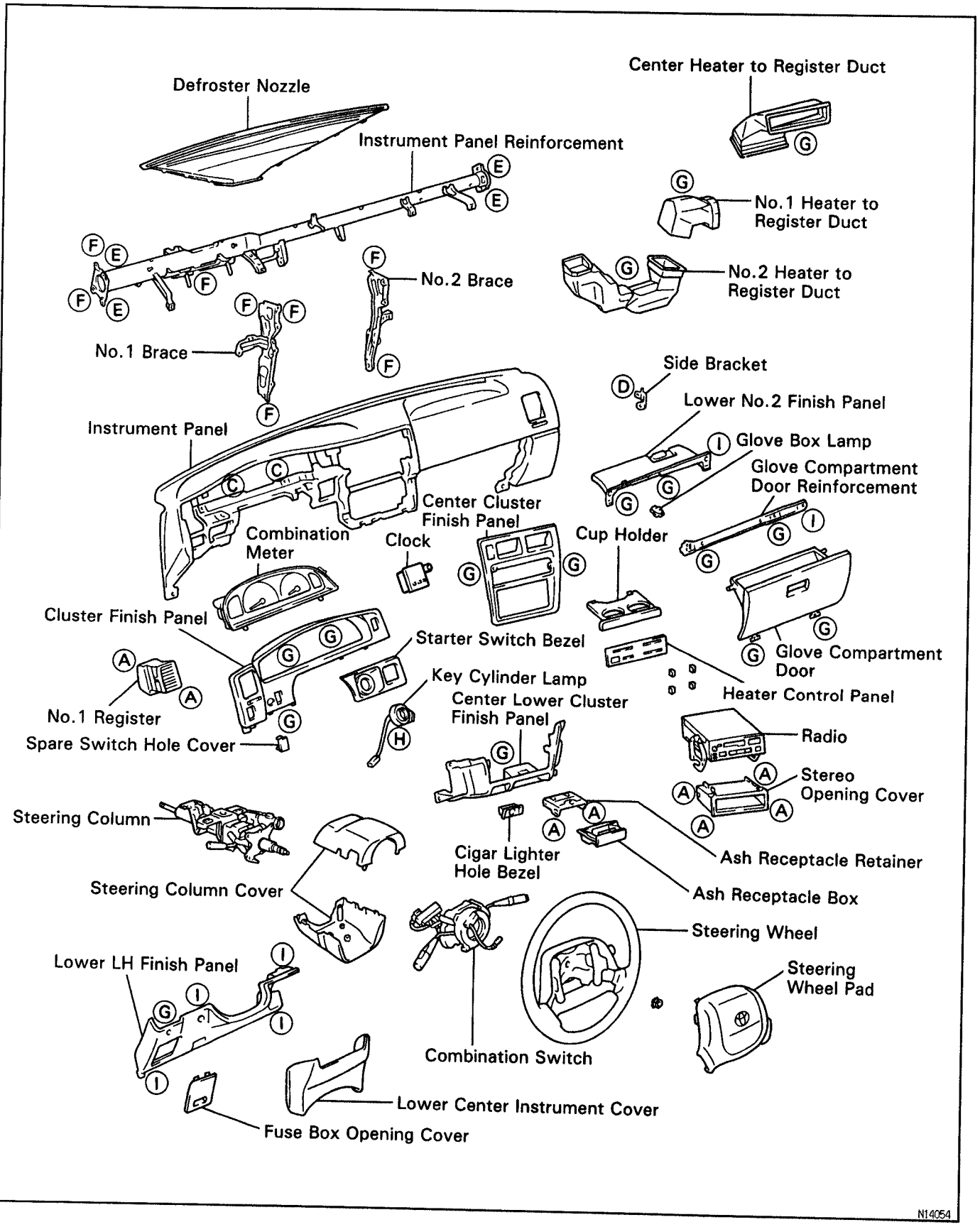

BO

CONPONENTS (Cont'd)

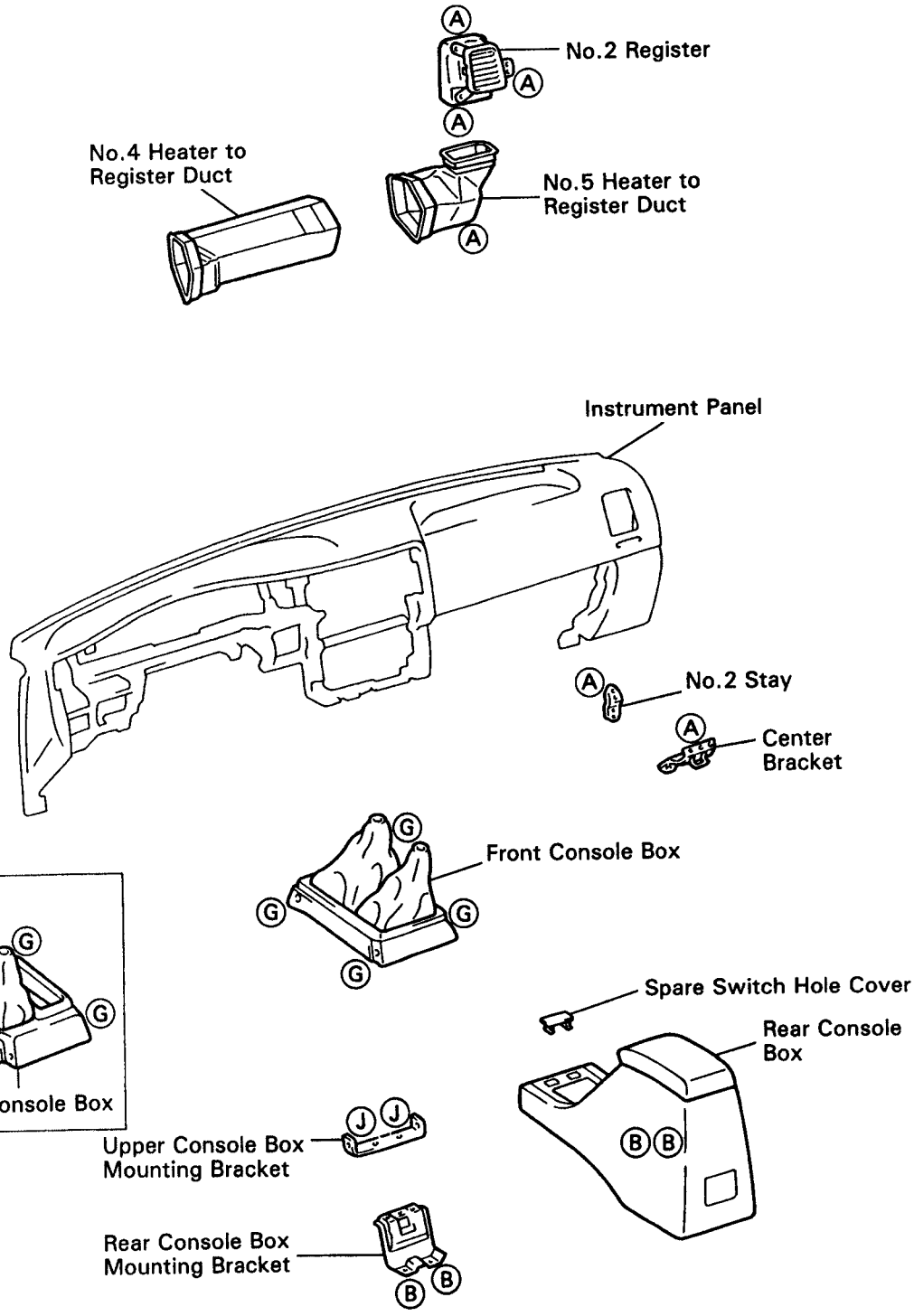

HINT: Screws in the illustration on the previous page are indicated using the code below for removal and installation of instrument panel.

mm (in.)

Code	Shape	Size	Code	Shape	Size	Code	Shape	Size	Code	Shape	Size
Ⓐ		ϕ = 5 (0.20) L = 14 (0.55)	Ⓑ		ϕ = 6 (0.24) L = 18 (0.71)	Ⓒ		—	Ⓓ		ϕ = 6 (0.24) L = 18 (0.71)
Ⓔ		—	Ⓕ		ϕ = 8 (0.31) L = 18 (0.71)	Ⓖ		ϕ = 5.22 (0.21) L = 16 (0.63)	Ⓗ		ϕ = 5 (0.20) L = 10 (0.39)
Ⓘ	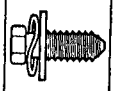	ϕ = 6 (0.24) L = 22 (0.87)	Ⓙ	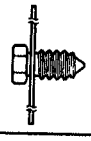	ϕ = 6 (0.24) L = 16 (0.63)						

N14115

V06480

INSTRUMENT PANEL REMOVAL

B01TA–02

1. **REMOVE STEERING WHEEL**
   (See page SR–16)
2. **REMOVE THESE PARTS:**
(a) Steering column cover
(b) Hood lock release lever
(c) Combination switch
(d) Fuse box opening cover

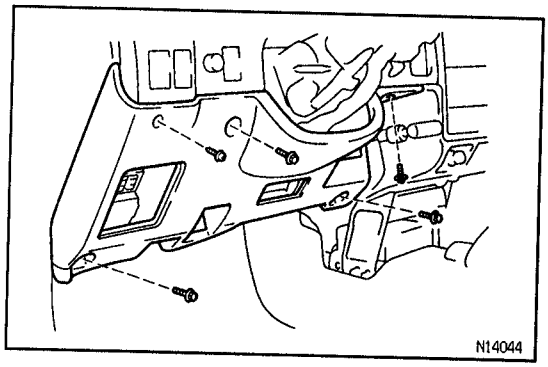

N14044

3. **REMOVE LOWER LH FINISH PANEL**
   Remove the 4 bolts, screw and lower LH finish panel.
4. **REMOVE THESE PARTS:**
(a) Starter switch bezel
(b) No. 2 heater to register duct
(c) Steering column (See page SR–13)
(d) Clock

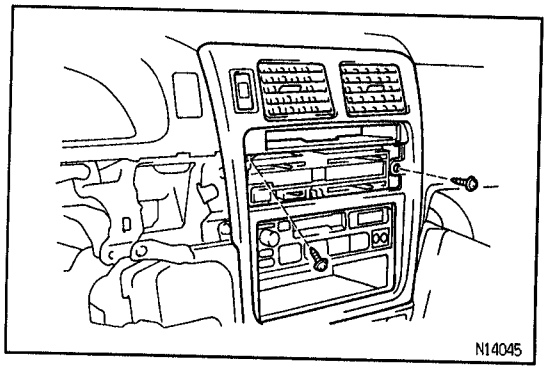

N14045

5. **REMOVE CENTER CLUSTER FINISH PANEL**
(a) Remove the cup holder and heater control knobs.
(b) Using a screwdriver, remove the heater control panel.
(c) Disconnect the hazard connector.
(d) Remove the 2 screws and center cluster finish panel.
(e) Remove the heater control.(See page AC–41)
(f) Remove the radio.
HINT: Tape the screwdriver tip before use.

BO

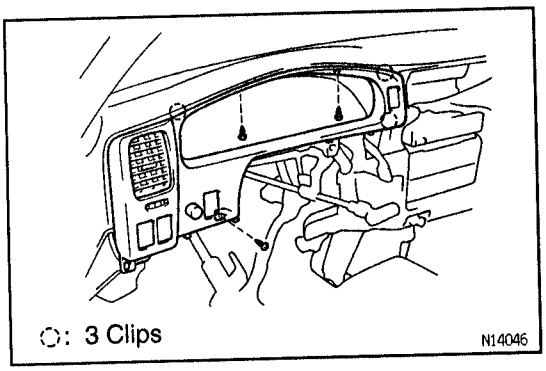

6. REMOVE CLUSTER FINISH PANEL

(a) Remove the 3 screws.

(b) Using a screwdriver, remove the panel.

HINT: Tape the screwdriver tip before use.

7. REMOVE COMBINATION METER

(a) Remove the 4 screws.

(b) Disconnect the speedometer cable.

(c) Disconnect the 4 connectors.

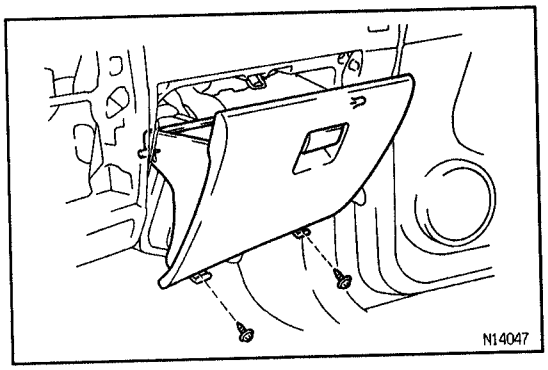

8. REMOVE THESE PARTS:

(a) No. 1 register

(b) No. 1 heater to register duct

9. REMOVE GLOVE COMPARTMENT DOOR

Remove the 2 screws and glove compartment door.

10. REMOVE GLOVE COMPARTMENT DOOR REINFORCEMENT

Remove the 2 screws, bolt and glove compartment door reinforcement.

11. REMOVE LOWER CENTER INSTRUMENT COVER

Remove the 2 clips.

12. REMOVE LOWER NO. 2 FINISH PANEL

Remove the 3 screws.

13. REMOVE THESE PARTS:

(a) Ash receptacle box

(b) Ash receptacle retainer

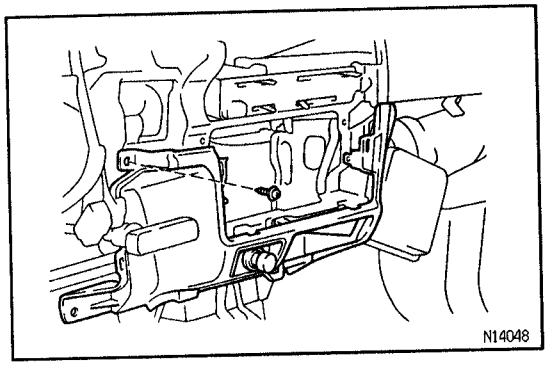

14. REMOVE CENTER LOWER CLUSTER FINISH PANEL

(a) Remove the stereo opening cover.

(b) Remove the screw.

(c) Disconnect the cigar lighter connector.

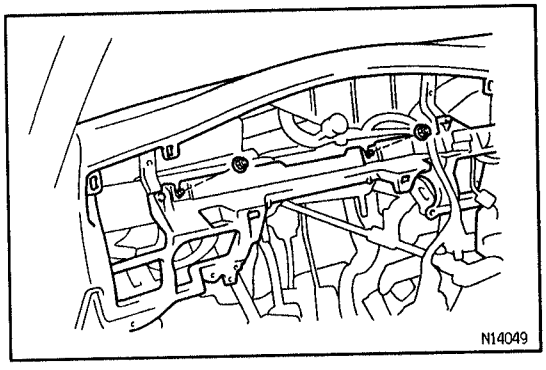

15. REMOVE INSTRUMENT PANEL

(a) Remove the side bracket.

(b) Remove the 2 nuts and instrument panel.

16. REMOVE INSTRUMENT PANEL REINFORCEMENT

(a) Remove the No. 1 and No. 2 brace.

(b) Remove the center heater to register duct.

(c) Remove the defroster nozzle.

(d) Remove the 4 nuts, 3 bolts and reinforcement.

INSTRUMENT PANEL DISASSEMBLY

BO0KF–05

REMOVE THESE PARTS:

(a) No. 4 heater to register duct
(b) No. 5 heater to register duct
(c) No. 2 register
(d) Center bracket
(e) No. 2 stay
(f) Front console box
(g) Upper console box mounting bracket
(h) Rear console box
(i) Rear console box mounting bracket

INSTRUMENT PANEL ASSEMBLY

BO257–01

Assembly is in the reverse order of disassembly.

INSTRUMENT PANEL INSTALLATION

BO258–01

Installation is in the reverse order of removal.

ONE–TOUCH TAIL GATE

COMPONENTS

BO150–04

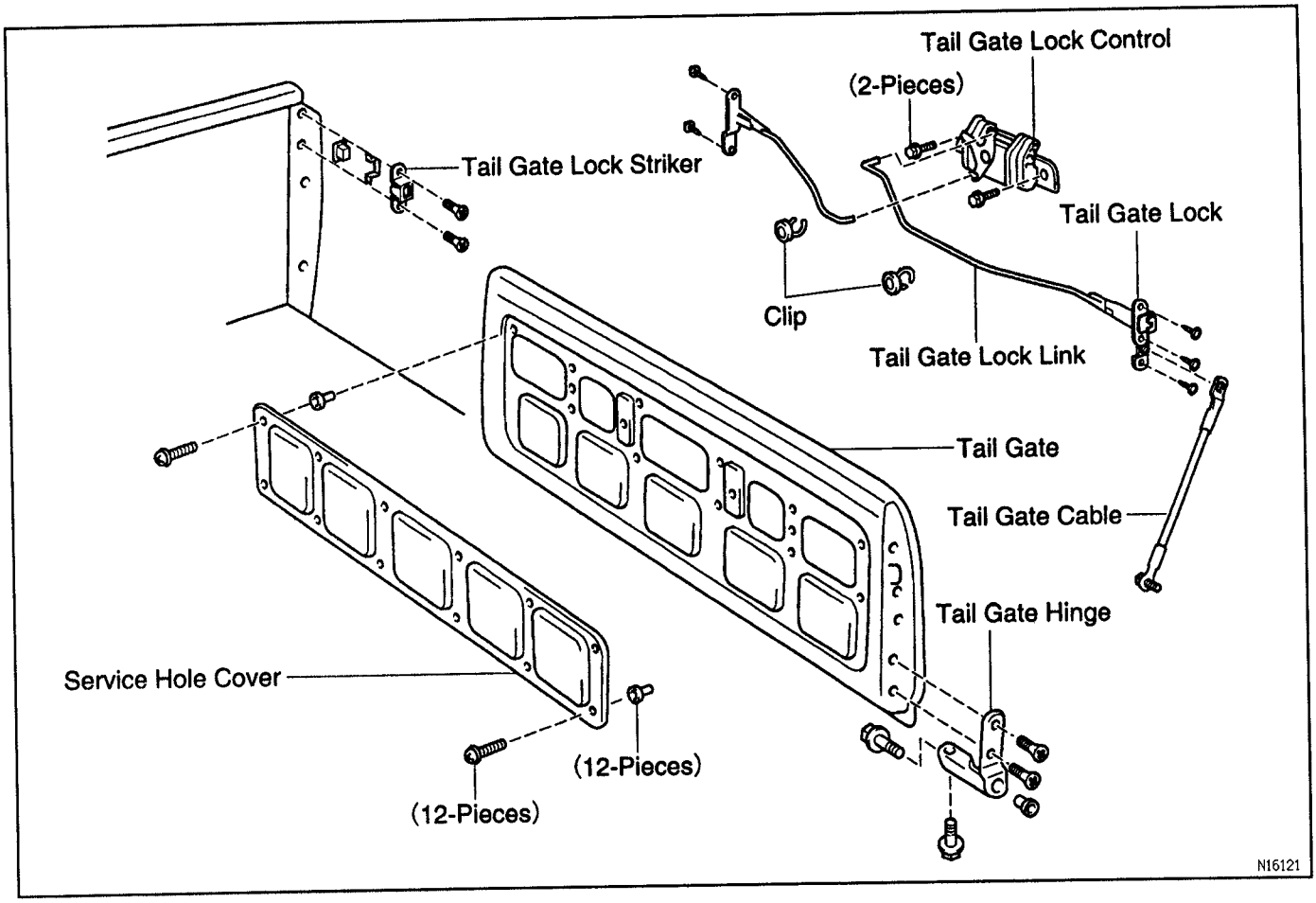

BO250–01

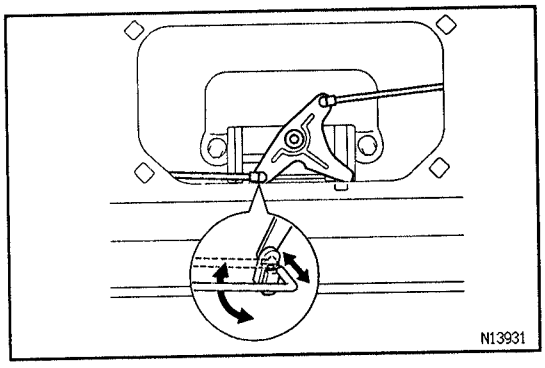

TAIL GATE REMOVAL

1. **REMOVE SERVICE HOLE COVER**
   Remove the 12 screws and service hole cover.
2. **DISCONNECT TALE GATE LOCK LINK FROM TAIL GATE LOCK CONTROL**

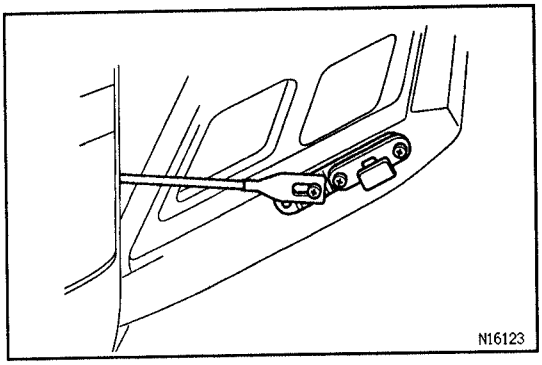

3. **REMOVE TAIL GATE CABLE**
   (a) Disconnect the tail gate cable from the tail gate.
   (b) Remove the bolt and tail gate cable from the body.
   Torque: 14 N·m (140 kgf·cm, 10 ft·lbf)
4. **REMOVE TAIL GATE LOCK FROM TAIL GATE**
   Remove the 2 screws and tail gate lock.

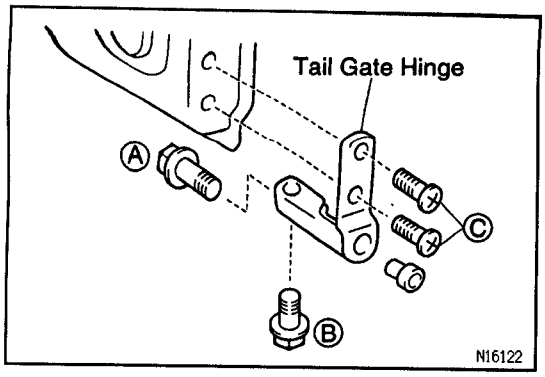

5. REMOVE THESE PARTS:

(a) Tail gate lock striker
Torque: 12 N·m (120 kgf·cm, 9 ft·lbf)
(b) Tail gate
(c) Tail gate hinge
Torque:
Ⓐ: 31 N·m (310 kgf·cm, 22 ft·lbf)
Ⓑ: 24 N·m (240 kgf·cm, 17 ft·lbf)
Ⓒ: 28 N·m (290 kgf·cm, 19 ft·lbf)

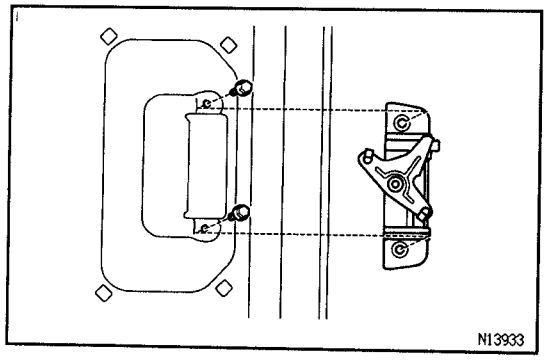

TAIL GATE LOCK CONTROL REMOVAL BO15C-04

1. REMOVE SERVICE HOLE COVER
2. DISCONNECT 2 TAIL GATE LOCK LINKS
3. REMOVE TAIL GATE LOCK CONTROL

TAIL GATE LOCK CONTROL INSTALLATION BO25A-01

Installation is in the reverse order of removal.

TAIL GATE INSTALLATION BO25B-01

Installation is in the reverse order of removal.

SEAT
COMPONENTS

B01TB-02

Bench Seat

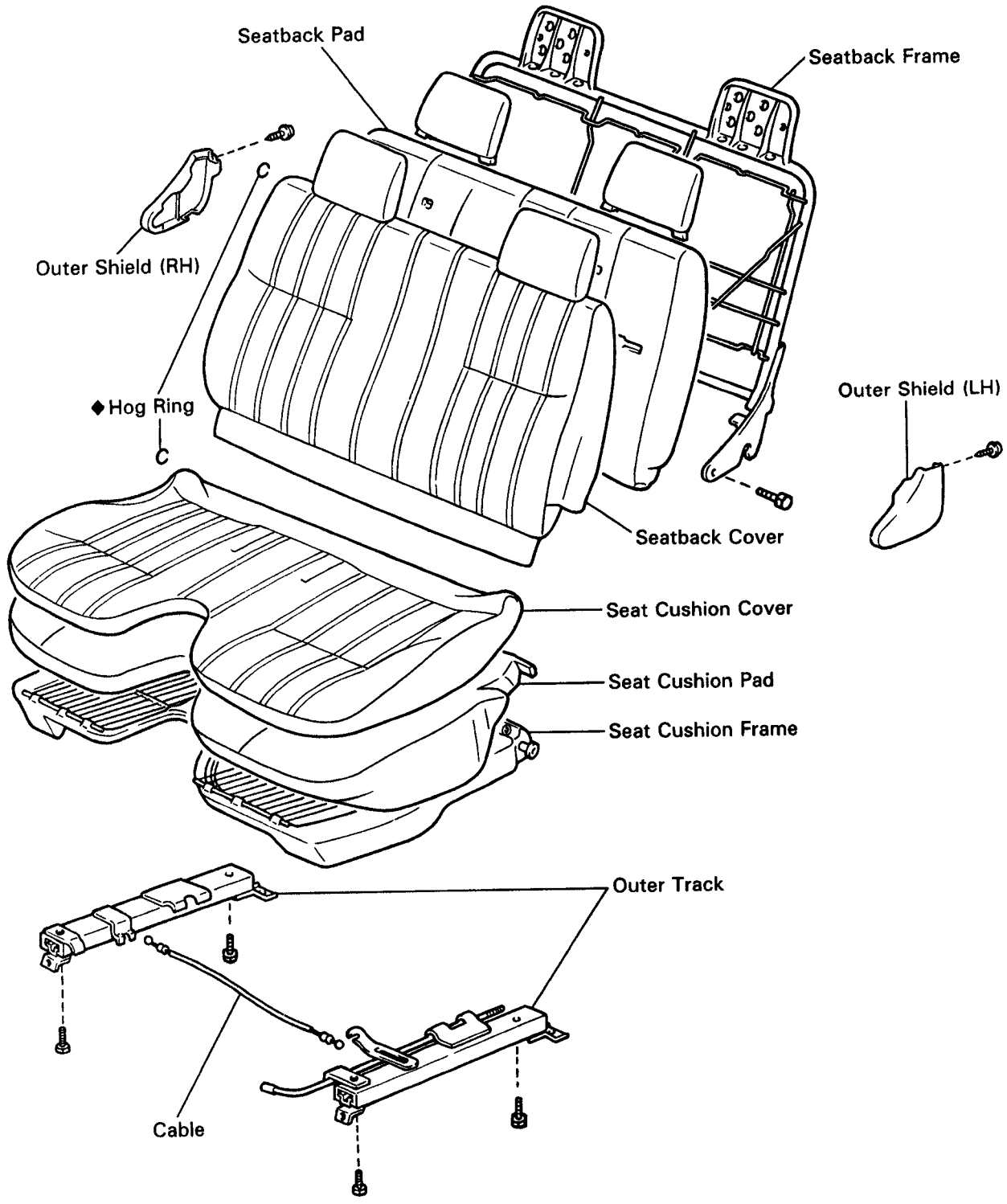

◆ Non-reusable part

N14056

BO

Split Bench Seat and Separate Seat

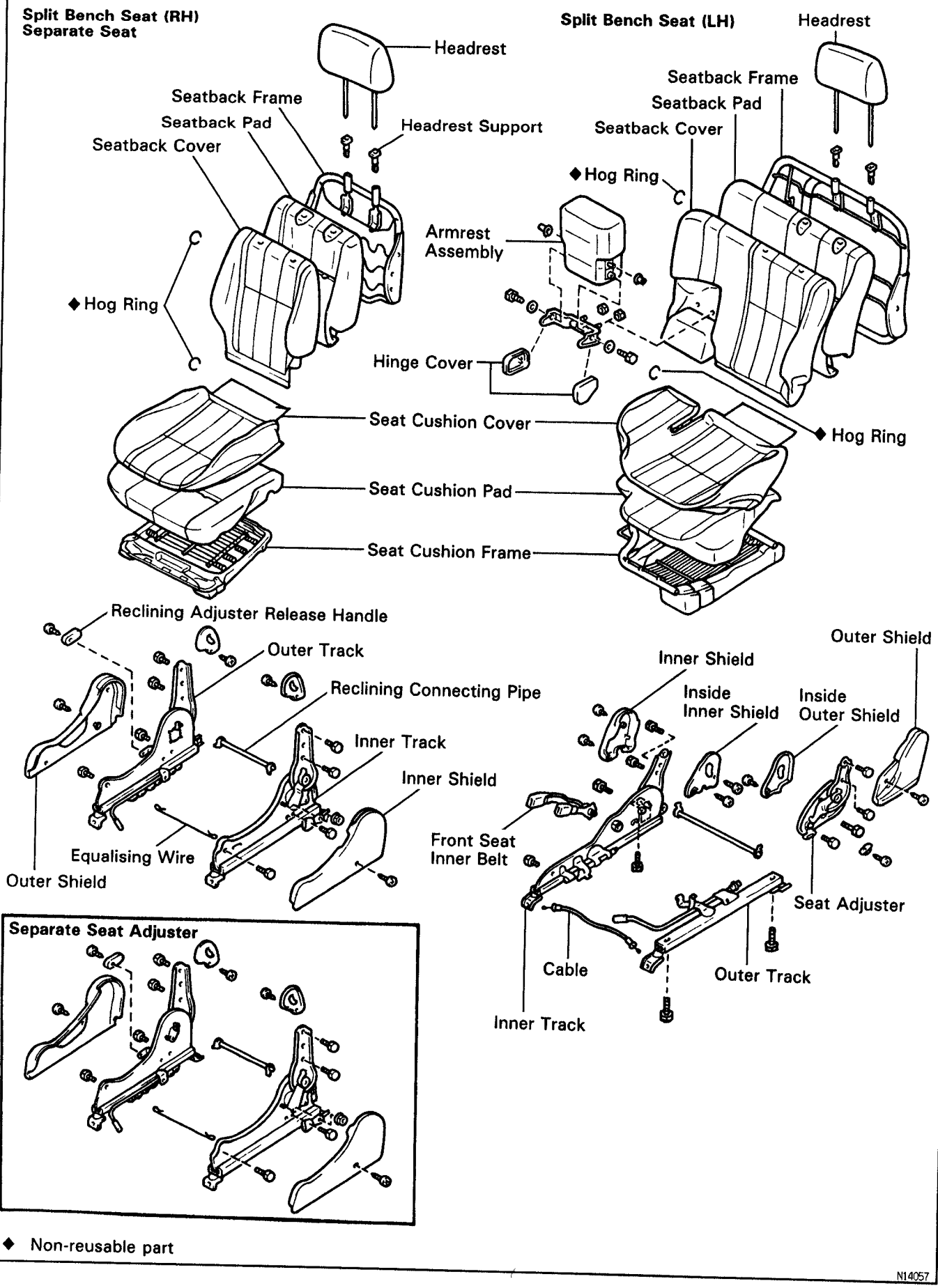

◆ Non-reusable part

N14057

BO

Sport Seat

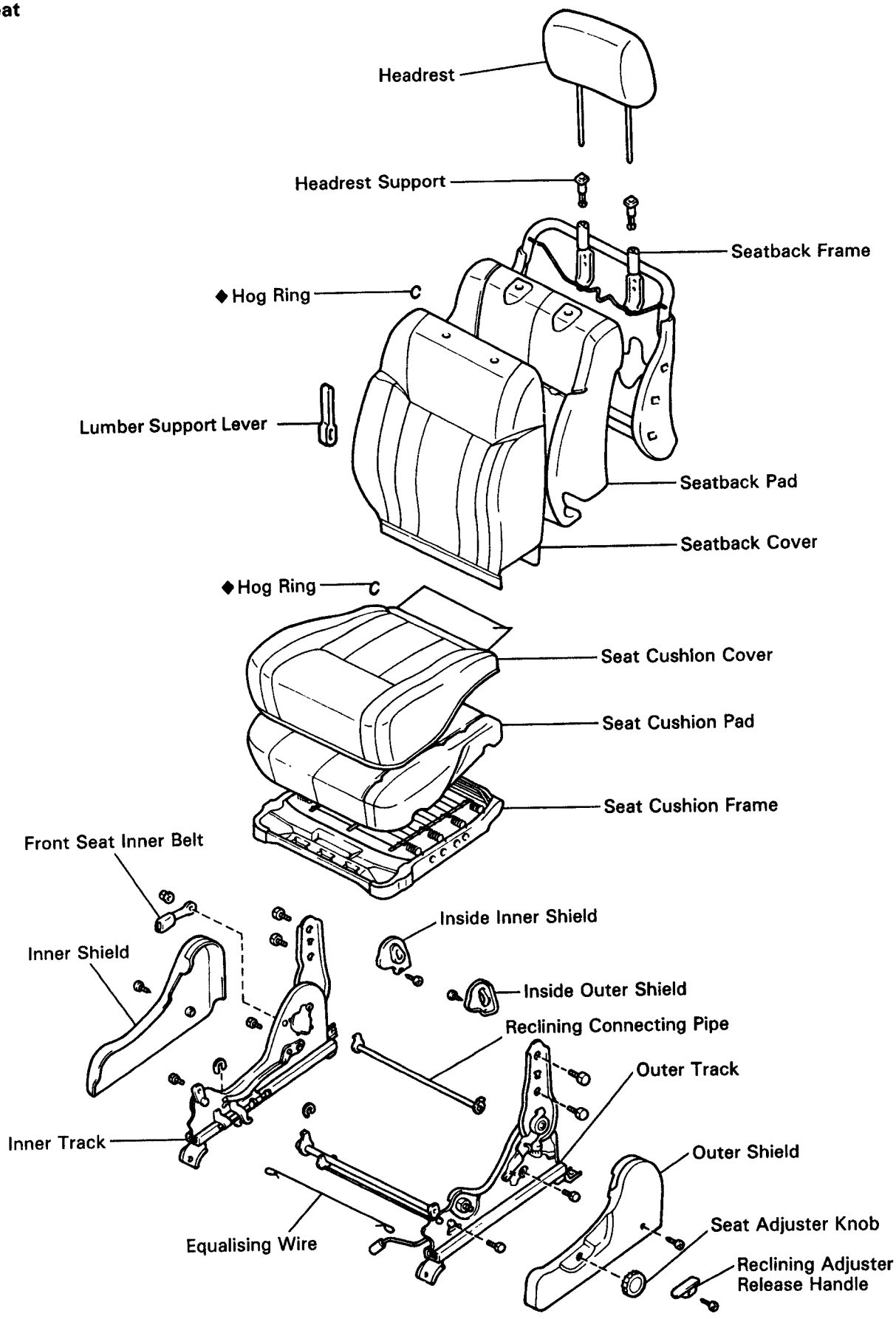

◆ Non-reusable part

N14058

COMPONENTS (Cont'd)

Rear Jump Seat

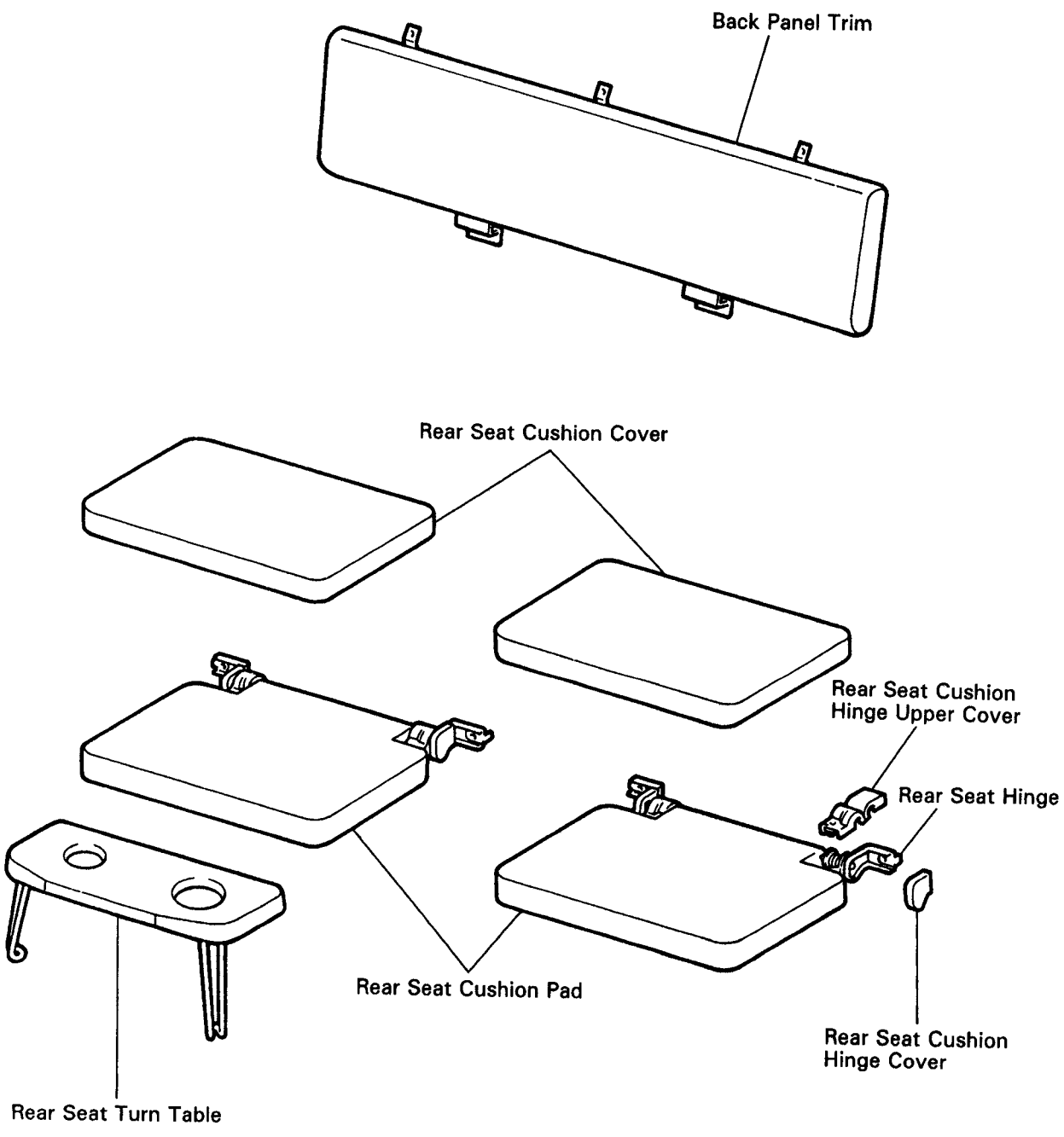

N14449

SEAT BELT

BO15F-04

COMPONENTS

FRONT:

Bench Seat and Split Bench Seat (Outer Belt)

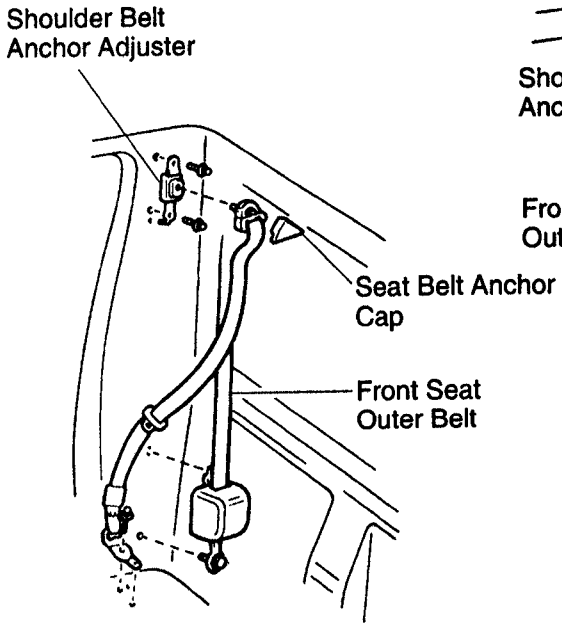

Separate Seat (Inner Belt and Outer Belt)

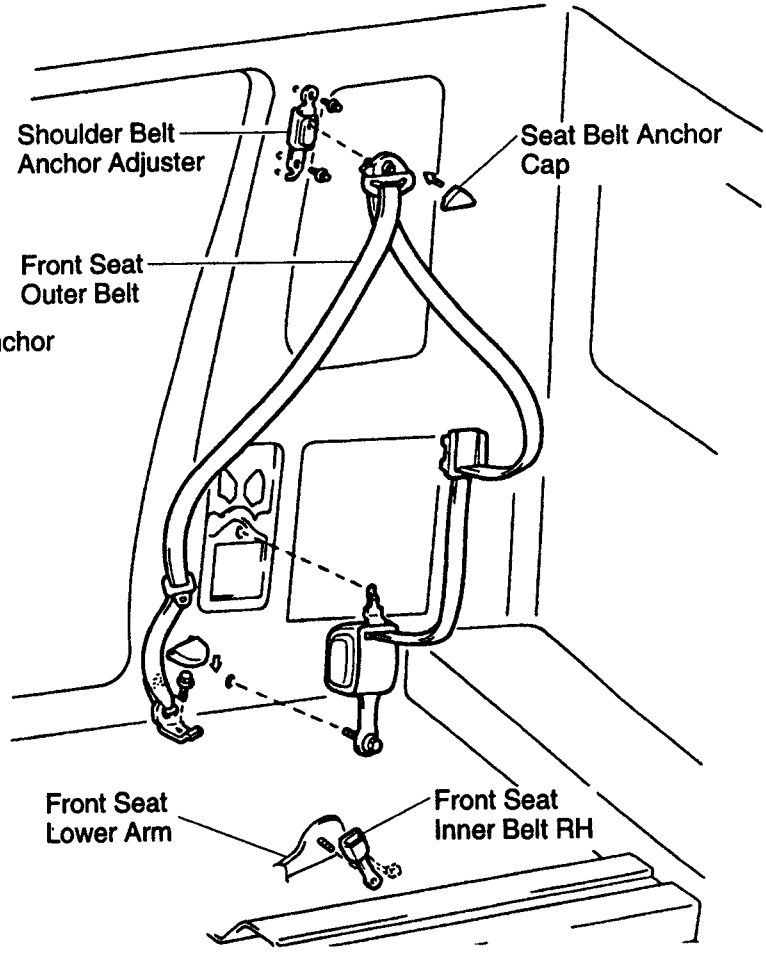

Bench Seat (Inner Belt)

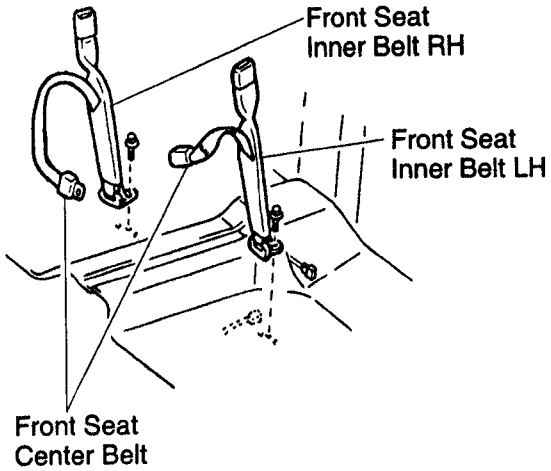

Split Bench Seat (Inner Belt)

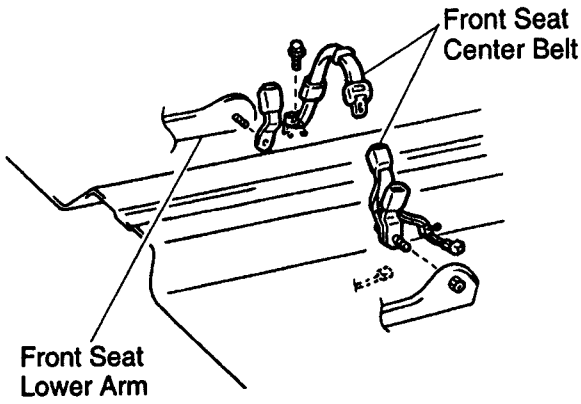

N14041

COMPONENTS (Cont'd)

REAR:

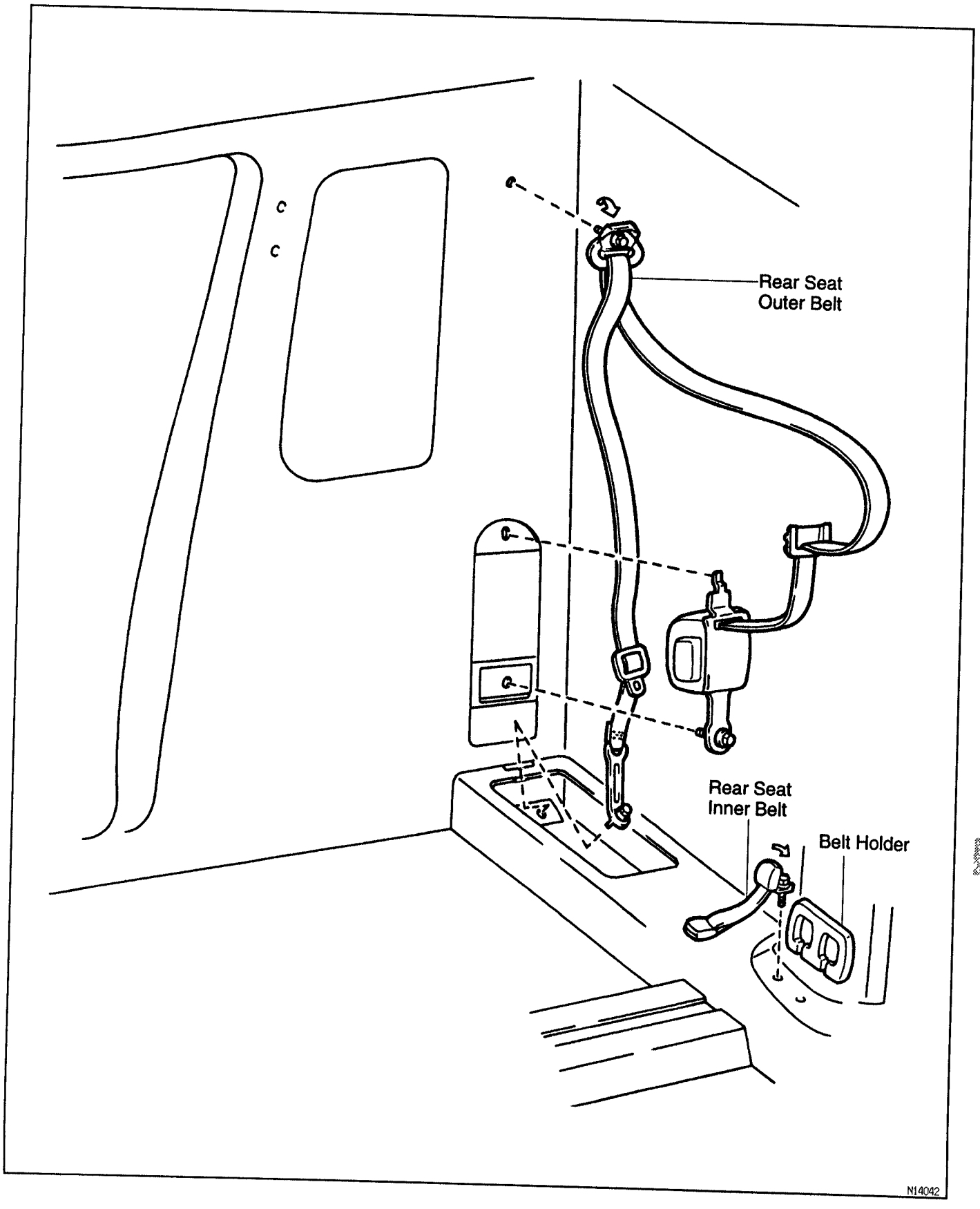

BO25C-01

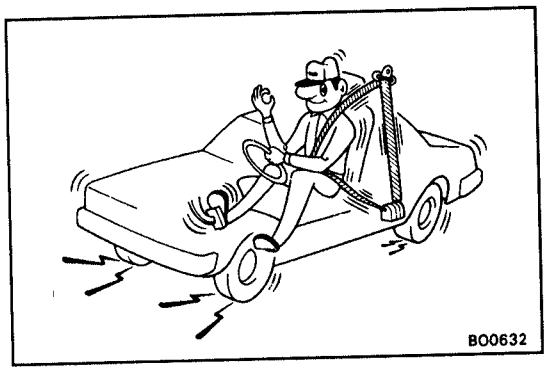

SEAT BELT INSPECTION

CAUTION: Replace the seat belt assembly (outer belt, inner belt, bolts or nuts and sill—bar) if it has been used in a severe impact. The entire assembly should be replaced even if damage is not obvious.

Emergency Locking Retractor (ELR) type

1. RUNNING TEST (IN SAFE AREA)

All seat belts:

(a) Fasten the front seat belts.

(b) Drive the car at 10 mph (16 km/h) and make a very hard stop.

(c) Check that the belt is locked and cannot be extended at this time.

HINT: Conduct this test in a safe area. If the belt does not lock, remove the belt mechanism assembly and conduct the following static check. Also, whenever installing a new belt assembly, verify the proper operation before installation.

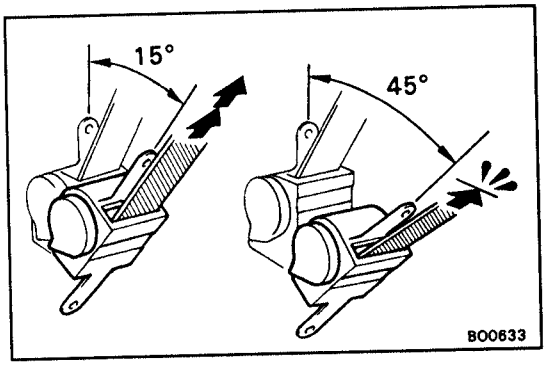

2. STATIC TEST

All seat belts:

(a) Verify that the belt locks when pulled out quickly.

(b) Remove the locking retractor assembly.

(c) Tilt the retractor slowly.

(d) Verify that the belt can be pulled out at a tilt of 15 degrees or less, and cannot be pulled out at over 45 degrees of tilt.

If a problem is found, replace the assembly.

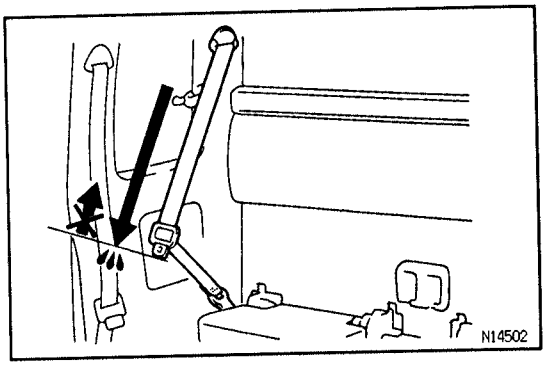

Except for driver's seat belt and FR center passenger

(e) Pull out the whole belt, release it slightly and then pull it out again.

(f) Verify that the belt cannot be extended further.

If a problem is found, replace the assembly.

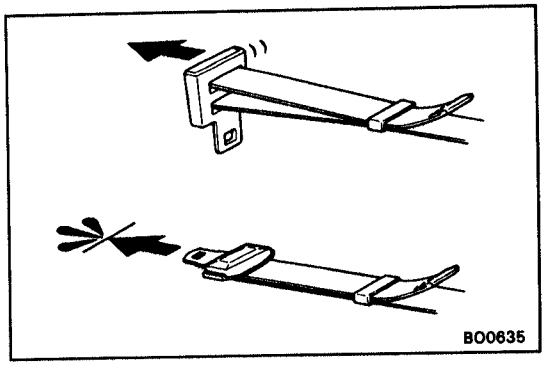

Manual Type

TESTING

(a) Adjust the belt to the proper length.

(b) Apply a firm load to the belt.

(c) Verify that the belt does not extend.

SERVICE SPECIFICATIONS

TORQUE SPECIFICATIONS

BO15K–05

Part tightened	N·m	kgf·cm	ft·lbf
HOOD			
Hood hinge x Hood	13	130	10
Hood hinge x Body	18	180	13
Hood lock x Body	8	82	71 in.·lbf
FRONT DOOR			
Hinge set bolts	23	230	17
Door lock striker x Body	12	120	9
Window regulator x Body (w/ , w/o Power window)	5	50	43 in.·lbf
Outside handle x Front door	5	50	43 in.·lbf
WIPER AND WASHER			
Wiper motor x Body	5.6	55	47 in.·lbf
Wiper link x Body	5.6	55	47 in.·lbf
Wiper arms x Wiper link	20	205	15
QUARTER WINDOW GLASS			
Seat belt anchor x Body	43	440	32
REMOVABLE ROOF			
Removable roof hinge case x Body	3.5	35	30 in.·lbf
Removable roof lock base x Body	6	60	52 in.·lbf
Removable roof handle x Removable roof	3	30	26 in.·lbf
ONE TOUCH TAIL GATE			
Tail gate cable x Tail gate	14	140	10
Tail gate lock striker x Body	12	120	9
Tail gate hinge x Body (Ⓐ bolt)	31	310	22
(Ⓑ bolt)	24	240	17
(Ⓒ bolt)	28	290	19
SEAT			
Front Seat			
Seat adjuster x Body	37	375	27
Rear Jump Seat (Extra Cab)			
Back panel trim x Body	10	100	7
Seat cushion x Body	10	100	7
SEAT BELT			
Front Seat Belt			
Shoulder belt anchor adjuster x Body	42	420	30
Shoulder belt anchor adjuster x Front outer belt	42	420	30
Front seat inner belt x Body	42	420	30
Front seat lower arm x Front seat inner belt	42	420	30
ELR x Body	42	420	30
Center belt x Body (Split bench seat)	42	420	30
Rear Seat Belt			
Rear seat outer belt x Body	42	420	30
ELR x Body	42	420	30
Rear seat inner belt x Body	42	420	30

AIR CONDITIONING SYSTEM

PRECAUTION ..... AC– 2
DESCRIPTION ..... AC– 5
PREPARATION ..... AC– 7
USE OF MANIFOLD GAUGE SET ..... AC– 8
EVACUATING AIR IN REFRIGERATION SYSTEM AND CHARGING WITH REFRIGERANT ... AC– 9
TROUBLESHOOTING ..... AC– 12
REFRIGERANT VOLUME ..... AC– 19
DRIVE BELT TENSION ..... AC– 20
IDLE–UP SPEED ..... AC– 20
REFRIGERANT LINES ..... AC– 21
COOLING UNIT ..... AC– 23
HEATER UNIT ..... AC– 24
BLOWER UNIT ..... AC– 26
COMPRESSOR ..... AC– 27
RECEIVER ..... AC– 33
CONDENSER ..... AC– 34
EVAPORATOR ..... AC– 35
HEATER RADIATOR ..... AC– 35
WATER VALVE ..... AC– 35
EXPANSION VALVE ..... AC– 36
VACUUM SWITCHING VALVE (VSV) ..... AC– 36
BLOWER MOTOR ..... AC– 38
BLOWER RESISTOR ..... AC– 38
PRESSURE SWITCH ..... AC– 39
THERMISTOR ..... AC– 39
RELAY ..... AC– 40
AIR CONDITIONING CONTROL ASSEMBLY ..... AC– 40
AIR CONDITIONING AMPLIFIER ..... AC– 44
SERVICE SPECIFICATIONS ..... AC– 46

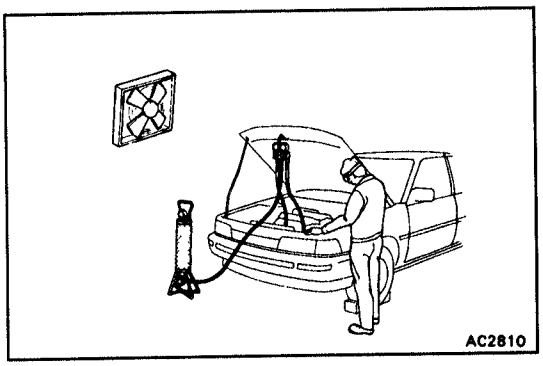

PRECAUTION

AC1T6–01

HANDLING PRECAUTIONS FOR REFRIGERANT

1. **DO NOT HANDLE REFRIGERANT IN AN ENCLOSED AREA OR NEAR AN OPEN FLAME**
2. **ALWAYS WEAR EYE PROTECTION**

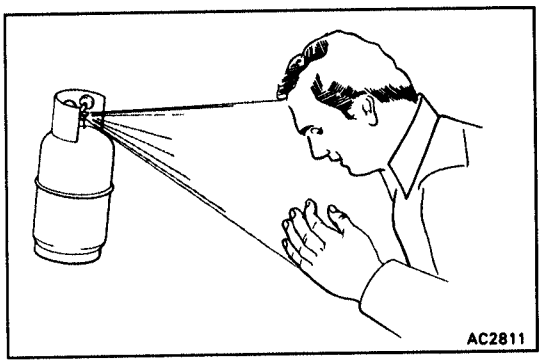

3. **BE CAREFUL THAT LIQUID REFRIGERANT DOES NOT GET IN YOUR EYES OR ON YOUR SKIN**

   If liquid refrigerant gets in your eyes or on your skin:

(a) Wash the area with lots of cool water.
CAUTION: Do not rub your eyes or skin.

(b) Apply clean petroleum jelly to the skin.

(c) Go immediately to a physician or hospital for professional treatment.

AC1T7–01

HANDLING PRECAUTIONS FOR REFRIGERANT CONTAINER

1. **NEVER HEAT CONTAINER OR EXPOSE IT TO NAKED FLAME**
2. **BE CAREFUL NOT TO DROP CONTAINER AND NOT TO APPLY PHYSICAL SHOCKS TO IT**

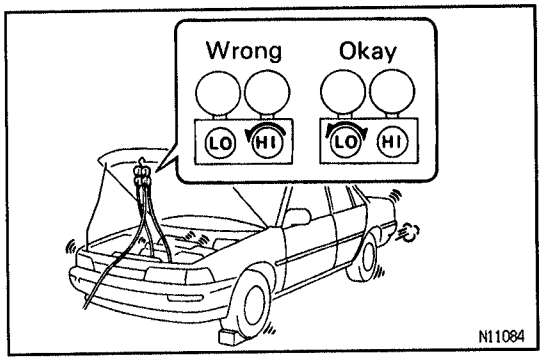

AC1T8–02

PRECAUTIONS WHEN CHARGING REFRIGERANT

1. **DO NOT OPERATE COMPRESSOR WITHOUT ENOUGH REFRIGERANT IN REFRIGERANT SYSTEM**

   If there is not enough refrigerant in the refrigerant system oil lubrication will be insufficient and compressor burnout may occur, so take care to avoid this.

2. **DO NOT OPEN HIGH PRESSURE MANIFOLD VALVE WHILE COMPRESSOR IS OPERATING**

   If the high pressure valve is opened, refrigerant flows in the reverse direction and could cause the charging cylinder to rupture, so open and close the only low pressure valve.

AC

3. **BE CAREFUL NOT TO OVERCHARGE SYSTEM WITH REFRIGERANT**

If refrigerant is overcharged, it causes problems such as insufficient cooling, poor fuel economy, engine overheating etc.

GAS LEAK TEST DESCRIPTION

AC26L–01

1. **PERFORM IN THESE CONDITIONS:**
   - Stop engine.
   - Secure good ventilation (If not, the gas leak detector may react to volatile gases which are not refrigerant, such as evaporated gasoline and exhaust gas.)
   - Repeat the test 2 or 3 times.
   - Make sure there is some refrigerant remaining in the refrigeration system.

   When compressor is OFF: approximately 392 – 588 KPa (4 – 6 kgf/cm², 57 – 35 psi)

2. **GAS LEAK TEST IN A/C UNIT**

(a) Bring the gas leak detector close to the drain hose before performing the test.

HINT:
- After the blower motor is stopped, leave the A/C unit for more than 15 minutes.
- Expose the gas leak detector sensor the under the drain hose.
- When bring the gas leak detector close to the drain hose, make sure that the gas leak detector does not react to the volatile gases.

If such reaction is unavoidable, the vehicle must be lifted up.

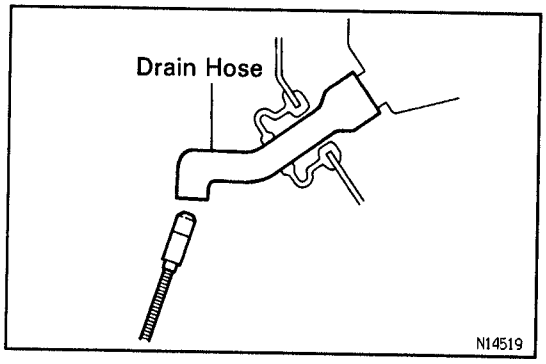

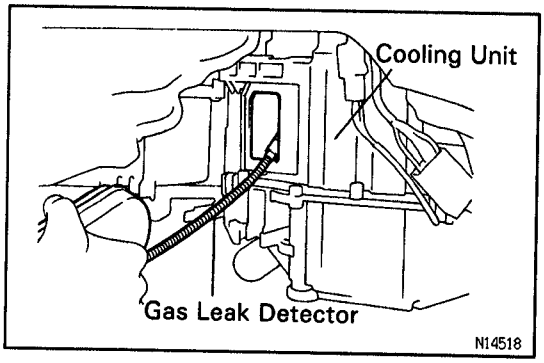

(b) If gas leak is not detected on the drain hose, remove the blower resistor from the A/C unit.Then insert the gas leak detector sensor into the unit and perform the test.

3 **GAS LEAK TEST AT PRESSURE SWITCH**

Disconnect the connector and leave the pressure switch for approximately 20 minutes.Then bring the gas leak detector close to the pressure switch and perform the test.

4 **GAS LEAK TEST AT REFRIGERANT LINES**

Bring the gas leak detector close to the refrigerant lines and perform the test.

HINT: Make sure there is no dirt on joints.

AC1TA-02

SUPPLEMENTAL RESTRAINT SYSTEM (SRS)

The TOYOTA TACOMA is equipped with an SRS (Spplemental Restraint System) such as the driver airbag. Failure to carry out service operations the correct sequence could cause the SRS to unexpectedly deployed during servicing, possibly leading to a serious accident. Further, if a mistake is made in servicing the SRS, it is possible the SRS may fail to operate when required. Before servicing (including removal or installation of parts, inspection or replacement), be sure to read the fllowing item carefully, then follow the correct procedure described in the repair manual.

DESCRIPTION
PARTS LOCATION

AC0K9-09

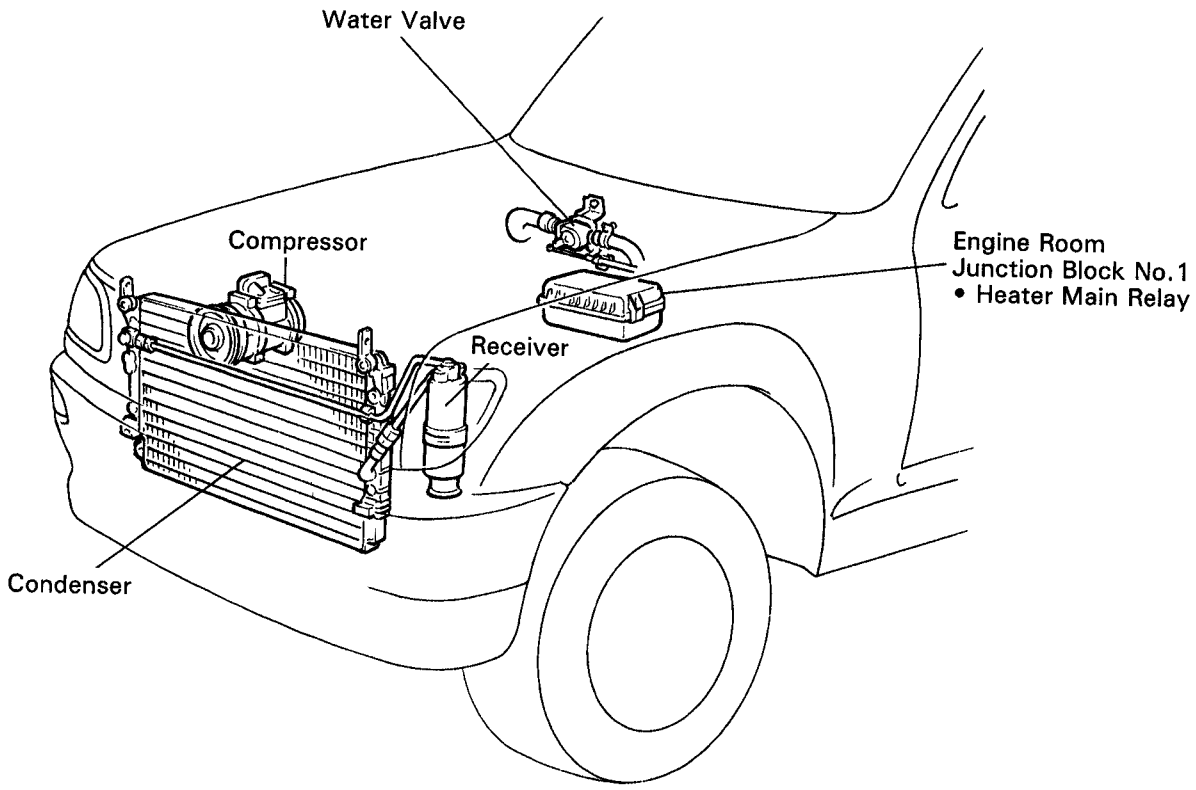

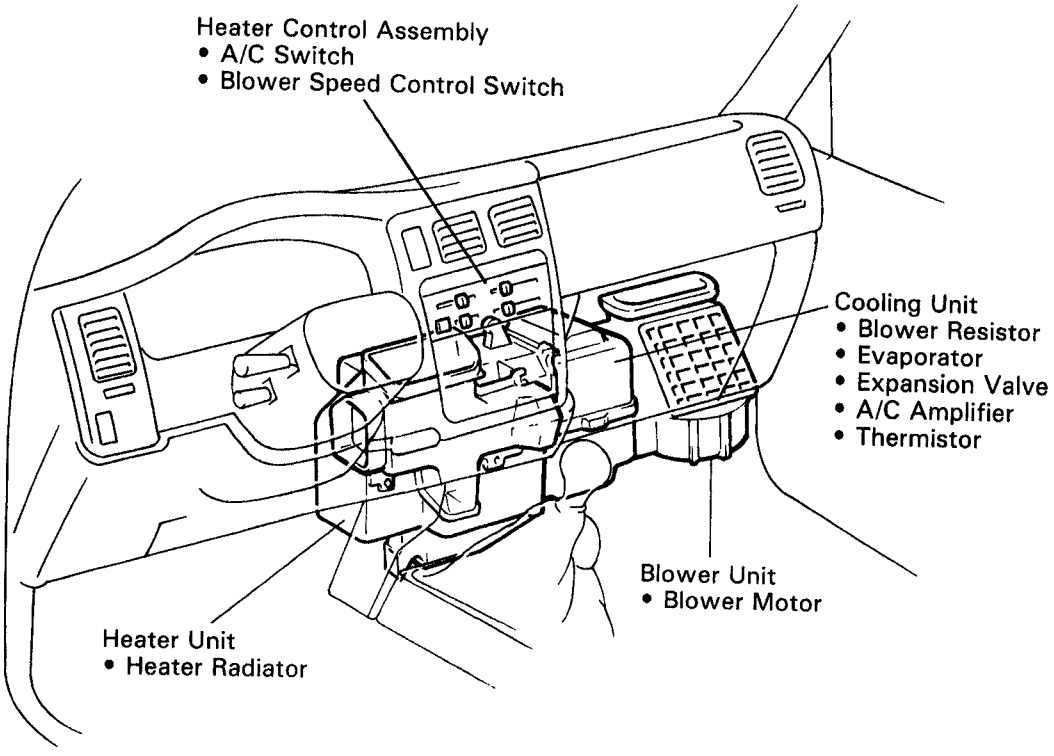

N14285

AC

AC0E8-0C

DAMPERS POSITION

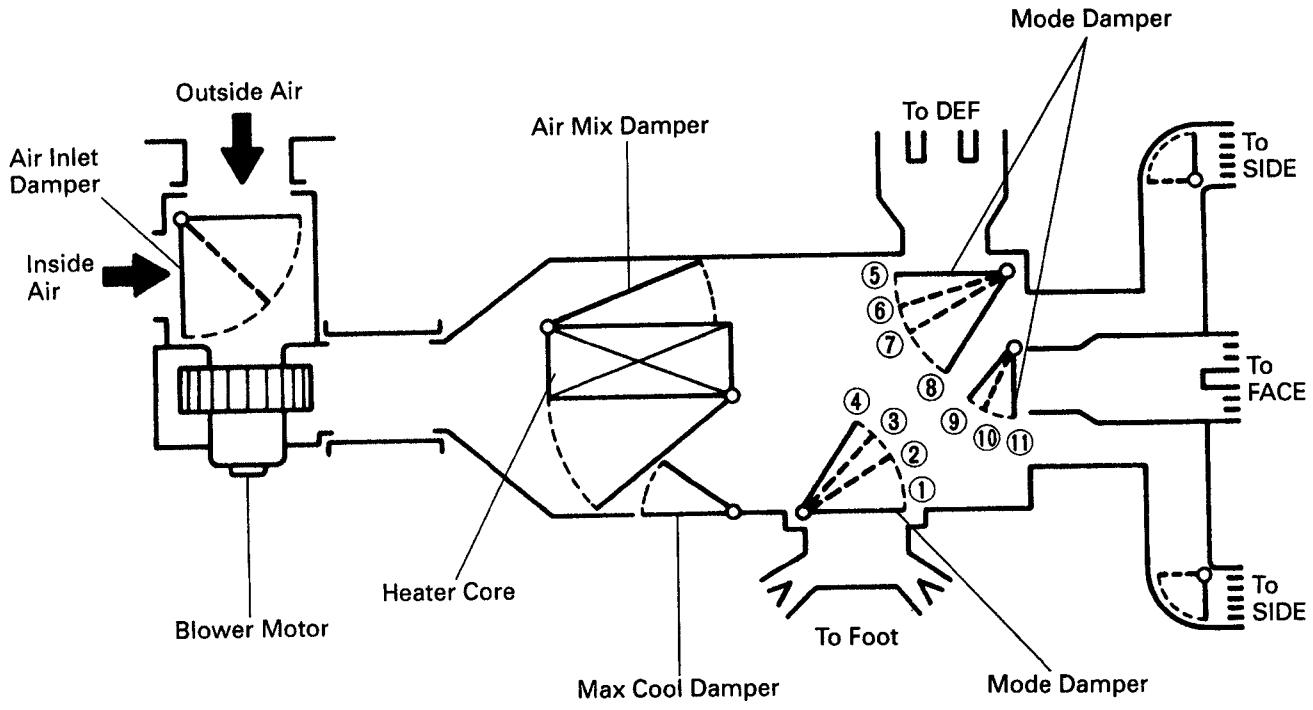

Mode	Air Flow Mode Damper Posions	Air Flow Vent			
		Center	Side	Foot	Def.
Face	① ⑤ ⑨	○	○		
Bi-Level	② ⑤ ⑩	○	○	○	
Foot	④ ⑥ ⑪		○	○	○
Foot/Def.	③ ⑦ ⑪		○	○	○
Def.	① ⑧ ⑪		○		○

N14188
O001BE The size of circule (○) indicates the proportion of the air flow volume.

Z15456

PREPARATION

SST(SPECIAL SERVICE TOOLS)

AC0ET–0A

	07110–58060 Air Conditioner Service Tool Set	
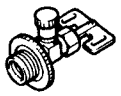	(07117–58060) Refrigerant Drain Service Valve	
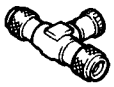	(07117–58070) T–Joint	
	(07117–58080) Quick Disconnect Adapter	Discharge (diam. 16 mm)
	(07117–58090) Quick Disconnect Adapter	Suction (diam. 13 mm)
	(07117–78050) Refrigerant Charging Gauge	
	(07117–88060) Refrigerant Charging Hose	Discharge (Red)
	(07117–88070) Refrigerant Charging Hose	Suction (Blue)
	(07117–88080) Refrigerant Charging Hose	Utility (Green)
	07112–66040 Magnetic Clutch Remover	
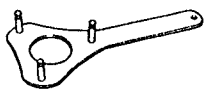	07112–76060 Magnetic Clutch Stopper	
	07114–84010 Snap Ring Pliers	
	07114–84020 Snap Ring Pliers	

AC

	07116–38360 Gas Leak Detector Assembly	

AC008–0F

RECOMMENDED TOOLS

	09082–00050 TOYOTA Electrical Tester Set.	

AC1KZ–02

LUBRICANT

Item	Capacity	Classification
Compressor oil	–	ND–OIL 8 or equivalent
When replacing receiver	10 cc (0.34 fl.oz.)	
When replacing condenser	40 cc (1.4 fl.oz.)	
When replacing evaporator	40 cc (1.4 fl.oz.)	
When replacing compressor	140 cc (4.8 fl.oz.)	

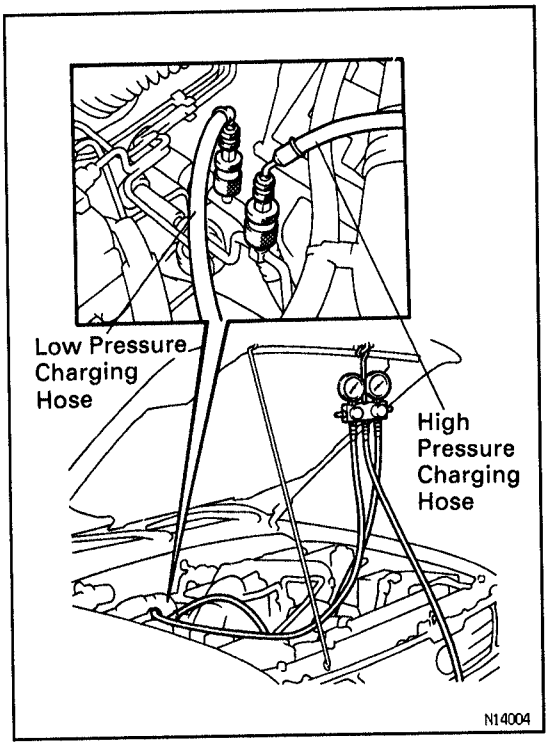

USE OF MANIFOLD GAUGE SET

AC0K8–07

MANIFOLD GAUGE SET INSTALLATION

1. **CONNECT CHARGING HOSES TO MANIFOLD GAUGE SET**
   Tighten the nuts by hand.
   CAUTION: Do not connect the wrong hoses.
2. **CONNECT QUICK DISCONNECT ADAPTERS TO CHARGING HOSES**
   Tighten the nuts by hand.
3. **CLOSE BOTH HAND VALVES OF MANIFOLD GAUGE SET**
4. **REMOVE CAPS FROM SERVICE VALVES ON REFRIGERANT LINE**

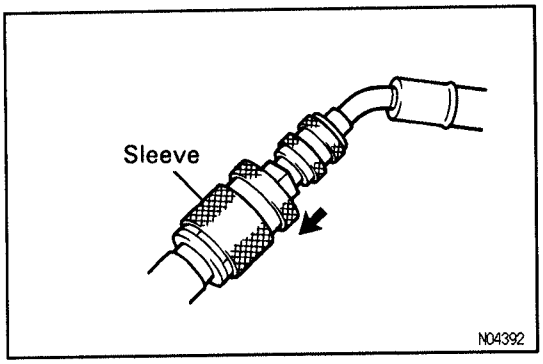

5. **CONNECT QUICK DISCONNECT ADAPTERS TO SERVICE VALVES**
   HINT: Push the quick disconnect adapters onto the service valve, then slide the sleeve of the quick disconnect adapters downward to lock it.

AC

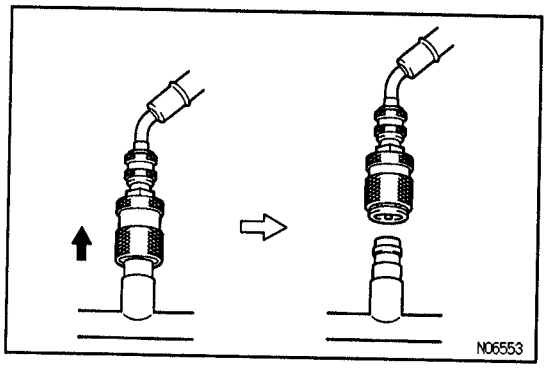

MANIFOLD GAUGE SET REMOVAL

AC0KC-06

1. CLOSE BOTH HAND VALVES OF MANIFOLD GAUGE SET
2. DISCONNECT QUICK DISCONNECT ADAPTERS FROM SERVICE VALVES ON REFRIGERANT LINE
   HINT: Slide the sleeve of the quick disconnect adapters upward to unlock the connector and remove it from the service valve.
3. INSTALL CAPS TO SERVICE VALVES ON REFRIGERANT LINE

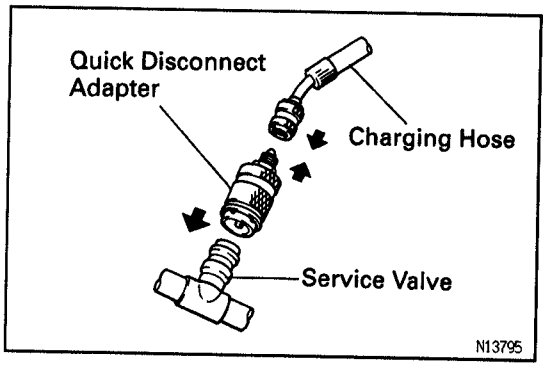

EVACUATING AIR IN REFRIGERATION SYSTEM AND CHARGING WITH REFRIGERANT

1. CONNECT QUICK DISCONNECT ADAPTERS TO CHARGING HOSES AC1QA-0A
2. REMOVE CAPS FROM SERVICE VALVES ON REFRIGERANT LINES
3. INSTALL MANIFOLD GAUGE SET ON SERVICE VALVES

(a) Close both hand valves of manifold gauge set.
(b) Connect the quick disconnect adapters to the service valves.

AC

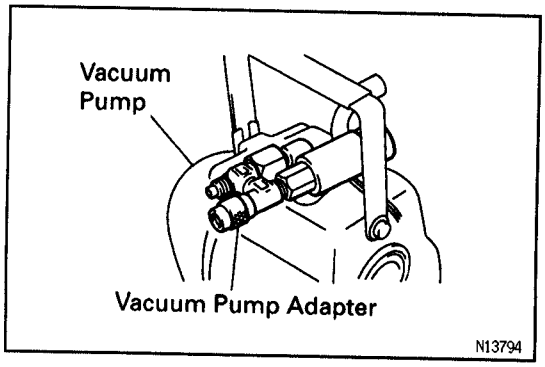

4. EVACUATE AIR FROM REFRIGERATION SYSTEM

(a) Connect the vacuum pump adapter to the vacuum pump.

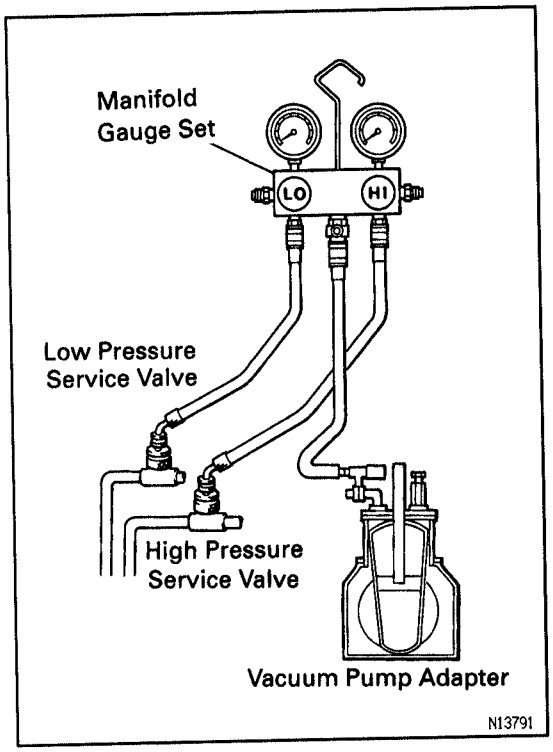

(b) Connect the center hose of the manifold gauge set to the vacuum pump adapter.

(c) Open both the high and low hand valves and run the vacuum pump.

(d) After 10 minutes or more, check that the low pressure gauge indicates 750 mmHg (30 in.Hg) or more.
HINT: If the reading is not 750 mmHg (30 in.Hg) or more, close both hand valves of manifold gauge set and stop the vacuum pump.
Check the system for leaks and repair as necessary.

(e) Close both the high and low hand valves and stop the vacuum pump.

(f) Leave the system in this condition for 5 minutes or longer and check that there is no gauge indicator.

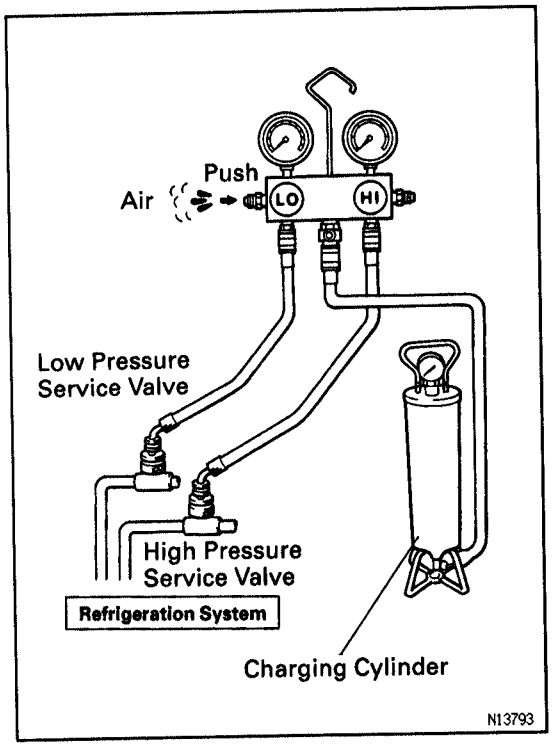

5. INSTALL CHARGING CYLINDER

HINT: When handling the charging cylinder, always follow the direction given in the instruction manual.

(a) Charge the proper amount of refrigerant in charging cylinder.

(b) Connect the center hose to the charging cylinder.
CAUTION: Do not open both high and low hand valves of manifold gauge set.

(c) Open the valve of charging cylinder.

(d) Press the valve core on the side of manifold gauge and expel the air inside of the center hose.

AC

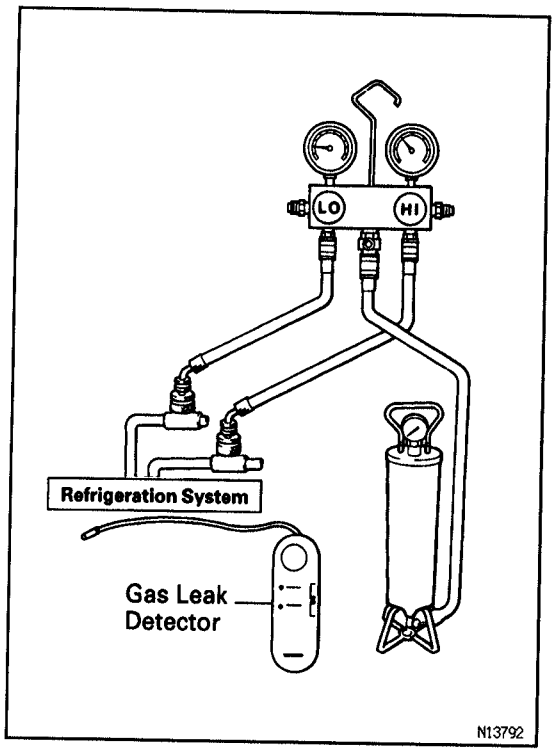

6. INSPECT REFRIGERATION SYSTEM FOR LEAKS

(a) Open the high pressure hand valve and charge refrigerant.

(b) When the low pressure gauge indicates 98 kPa (1 kgf/cm², 14 psi), close the high pressure hand valve.

(c) Using leak detector, check the system for leakage.

(d) If leak is found, repair the faulty component or connection. Add evacuate air from refrigeration system (Refer to 4).

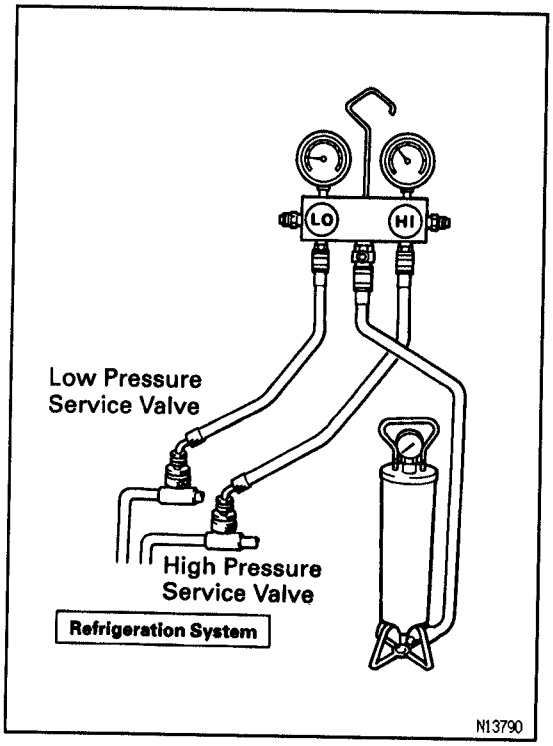

7. CHARGE REFRIGERANT INTO REFRIGERANT SYSTEM

If there is no leak after refrigrerant leak check charge, the proper amount of refrigerant into refrigerant into refrigeration system.

CAUTION:

- Never run the engine when charging the system through the high pressure side.
- Do not open the low pressure hand valve when the system is being charged with liquid refrigerant.

(a) Open the high pressure hand valve fully.

(b) Charge specified amount of refrigerant, then close the high pressure hand valve.

HINT: A fully charged system is indicated by the sight glass being free of any bubbles.

8. REMOVE MANIFOLD GAUGE SET FROM SERVICE VALVES

(a) Close both hand valves of manifold gauge set.

(b) Disconnect the quick disconnect adapters from the service valves.

9. INSTALL CAPS TO SERVICE VALVES ON REFRIGERANT LINES

AC

TROUBLESHOOTING

AC0LH-0A

Use the table below to help you find the cause of the problem.The numbers indicate the priority of the likely cause of the problem.Check each part in order. If necessary, replace these parts.

See page / Part Name / Trouble	AC-19	AC-20	—	AC-43		AC-40	AC-40	AC-38	AC-38		—	—	—	AC-27	AC-27
	Inspect volume of refrigerant	Inspect drive belt tension	Inspect engine coolant volume	Inspect A/C control lever adjustment	Inspect outlet air control	Heater main relay	Blower speed control switch	Blower resistor	Blower motor	Inspect cooling system for refrigerant	High pressure switch	Engine coolant temp. switch	Inspect refrigerant lines	Compressor	Magnetic clutch
No blower operation						1	4	3	2						
No air temperature control			1	2											
No compressor operation	1					6	8							4	3
Compressor operates immediately	1									2					
No cool air comes out	1	2												4	3
Cool air comes out immediately	1	2													
Cool air comes out only at high engine rpm	1	2											3		
Insufficient cooling	1	2								3			5		
No engine idle up when A/C switch on															
No warm air comes out			1	2											

AC

V01961

Condenser													AC-34
Receiver													AC-33
Evaporator		5											AC-35
Expansion valve		4											AC-36
Inspect refrigeration control			5										
A/C fuse				2	7	5	10	9	11				–
A/C switch						3	5	4	6				AC-42
Pressure switch							6	3	7				AC-39
Thermistor								6	4				AC-39
A/C amplifier									2	3	1		AC-44
Wiring and wiring connections												3	–
Vacuum switching valve (VSV)													AC-36
Heator radiator													AC-35

AC

V01962

ACONG-OM

REFRIGERANT SYSTEM INSPECTION WITH MANIFOLD GAUGE SET

This is a method in which the trouble is located by using a manifold gauge set.
(See "USE OF MANIFOLD GAUGE SET" on page AC−8)
Read the manifold gauge pressure when the following conditions are established:

(a) Temperature at the air inlet with the switch set at RECIRC is 30 — 35 °C (86 — 95 °F)
(b) Engine running at 1,500 rpm
(c) Blower speed control switch set at high
(d) Temperature control set at max. cool

HINT: It should be noted that the gauge indications may vary slightly due to ambient temperature conditions.

ACONR-OG

1. NORMALLY FUNCTIONING REFRIGERATION SYSTEM

Gauge reading:

Low pressure side:

0.15 — 0.25 MPa (1.5 — 2.5 kgf/cm²)

High pressure side:

1.37 — 1.57 MPa (14 — 16 kgf/cm²)

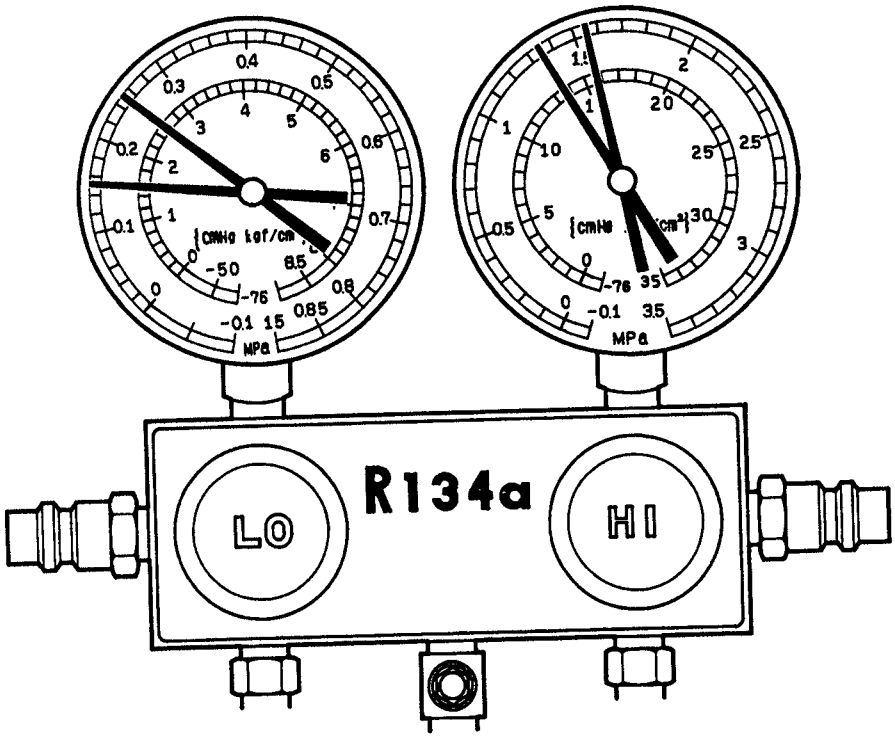

N04147

AC

2. MOISTURE PRESENT IN REFRIGERATION SYSTEM

Condition: Periodically cools and then fails to cool

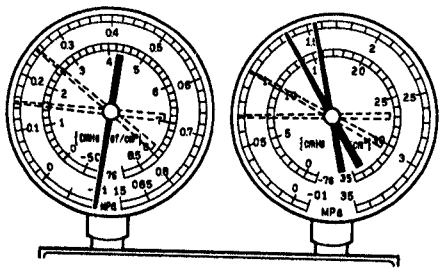

N04148

Symptom seen in refrigeration system	Probable cause	Diagnosis	Remedy
• During operation, pressure on low pressure side sometimes becomes a vacuum and sometimes normal	• Moisture entered in refrigeration system freezes at expansion valve orifice and temporarily stops cycle, but normal state is restored after a time when the ice melts	• Drier in oversaturated state ↓ • Moisture in refrigeration system freezes at expansion valve orifice and blocks circulation of refrigerant	(1) Replace receiver/drier (2) Remove moisture in cycle through repeatedly evacuating air (3) Charge proper amount of new refrigerant

V01034

3. INSUFFICIENT REFRIGERANT

Condition: Insufficient cooling

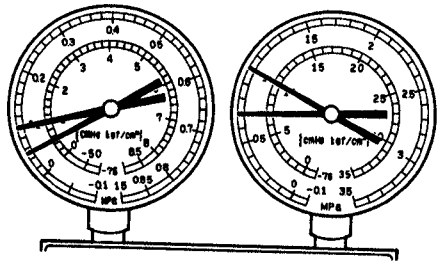

N04149

Symptom seen in refrigeration system	Probable cause	Diagnosis	Remedy
• Pressure low on both low and high pressure sides • Bubbles seen in sight glass continuously • Insufficient cooling performance	• Gas leakage at some place in refrigeration system	• Insufficient refrigerant in system ↓ • Refrigerant leaking	(1) Check for gas leakage with leak detector and repair if necessary (2) Charge proper amount of refrigerant (3) If indicated pressure value is near 0 when connected to gauge, create the vacuum after inspecting and repairing the location of the leak

V01035

AC

4. POOR CIRCULATION OF REFRIGERANT

Condition: Insufficient cooling

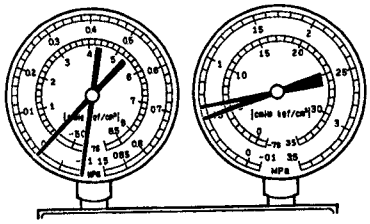

N04150

Symptom seen in refrigeration system	Probable cause	Diagnosis	Remedy
• Pressure low on both low and high pressure sides • Frost on tubes from receiver to unit	• Refrigerant flow obstructed by dirt in receiver	• Receiver clogged	• Replace receiver

V01030

5. REFRIGERANT DOES NOT CIRCULATE

Condition: Does not cool (Cools from time to time in some cases)

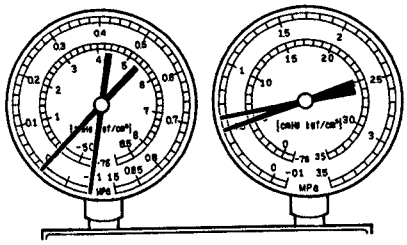

N04150

Symptom seen in refrigeration system	Probable cause	Diagnosis	Remedy
• Vacuum indicated on low pressure side, very low pressure indicated on high pressure side • Frost or dew seen on piping before and after receiver/drier or expansion valve	• Refrigerant flow obstructed by moisture or dirt in refrigeration system • Refrigerant flow obstructed by gas leakage from expansion valve heat sensing tube	• Refrigerant does not circulate	(1) Check heat sensing tube, expansion valve and EPR (2) Clean out dirt in expansion valve by blowing with air If not able to remove dirt, replace expansion valve (3) Replace receiver (4) Evacuate air and charge new refrigerant to proper amount. For gas leakage from heat sensing tube, replace expansion valve.

V01041

AC

6. REFRIGERANT OVERCHARGE OR INSUFFICIENT COOLING OF CONDENSER

Condition: Insufficient Cooling

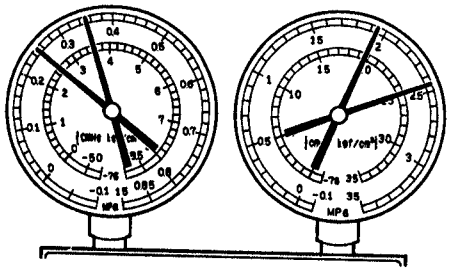

N04151

Symptom seen in refrigeration system	Probable cause	Diagnosis	Remedy
• Pressure too high on both low and high pressure sides • No air bubbles seen through the sight glass even when the engine rpm is lowered.	• Unable to develop sufficient performance due to excessive refrigerant in system • Insufficient cooling of condenser	• Excessive refrigerant in cycle → refrigerant overcharged • Condenser cooling insufficient → condenser fins clogged or fan motor faulty	(1) Clean condenser (2) Check fan motor operation (3) If (1) and (2) are in normal state, check amount of refrigerant Charge proper amount of refrigerant

V01032

7. AIR PRESENT IN REFRIGERATION SYSTEM

Condition: Insufficient cooling

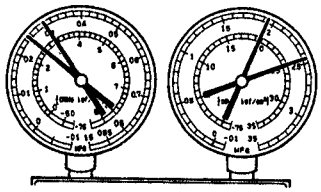

NOTE: These gauge indications are shown when the refrigeration system has been opened and the refrigerant charged without vacuum purging.

N04153

Symptom seen in refrigeration system	Probable cause	Diagnosis	Remedy
• Pressure too high on both low and high pressure sides • The low pressure piping is hot to the touch • Bubbles seen in sight glass	• Air entered in refrigeration system	• Air present in refrigeration system ↓ • Insufficient vacuum purging	(1) Check compressor oil to see if it is dirty or insufficient (2) Evacuate air and charge new refrigerant

V01033

AC

8. EXPANSION VALVE IMPROPERLY MOUNTED/HEAT SENSING TUBE DEFECTIVE (OPENS TOO WIDE)

Condition: Insufficient cooling

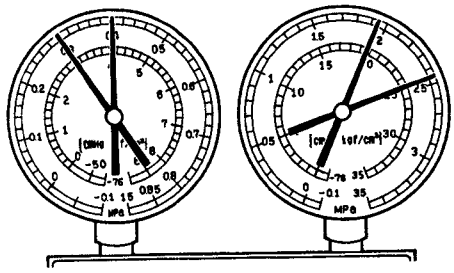

N04152

Symptom seen in refrigeration system	Probable cause	Diagnosis	Remedy
• Pressure too high on both low and high pressure sides • Frost or large amount of dew on piping on low pressure side	• Trouble in expansion valve or heat sensing tube not installed correctly	• Excessive refrigerant in low pressure piping ↓ • Expansion valve opened too wide	(1) Check heat sensing tube installed condition (2) If (1) is normal, check expansion valve Replace if defective

V01031

9. DEFECTIVE COMPRESSION COMPRESSOR

Condition: Does not cool

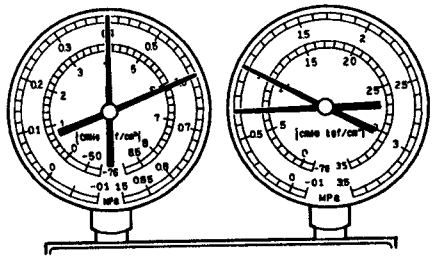

N04146

Symptom seen in refrigeration system	Probable cause	Diagnosis	Remedy
• Pressure too high on low pressure side • Pressure too low on high pressure side	• Internal leak in compressor	• Compression defective ↓ • Valve leaking or broken sliding parts	• Repair or replace compressor

V01029

AC

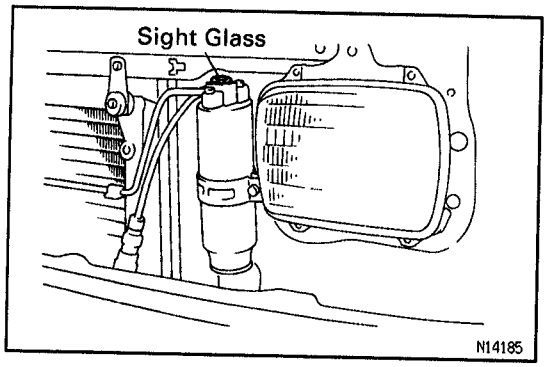

REFRIGERANT VOLUME

REFRIGERANT VOLUME INSPECTION

AC00G–16

1. SET TEMPERATURE CONTROL AT MAX. COOL
2. SET BLOWER SWITCH AT "HI"
3. SET AIR INLET CONTROL AT "RECIRC"
4. A/C SWITCH ON
5. FULLY OPEN DOORS
6. RUN ENGINE AT APPROX. 1,500 RPM
7. INSPECT AMOUNT OF REFRIGERANT
   Observe the sight glass on the liquid tube.

Item	Symptom	Amount of refrigerant	Remedy
1	Bubbles present in sight glass	Insufficient*	(1) Check for gas leakage with gas leak tester and repair if necessary (2) Add refrigerant until bubbles disappear
2	No bubbles present in sight glass	None, sufficient or too much	Refer to items 3 and 4
3	No temperature difference between compressor inlet and outlet	Empty or nearly empty	(1) Check for gas leakage with gas leak tester and repair if necessary (2) Add refrigerant until bubbles disappear
4	Temperature between compressor inlet and outlet is noticeably different	Correct or too much	Refer to items 5 and 6
5	Immediately after air conditioning is turned off, refrigerant in sight glass stays clear	Too much	(1) Discharge refrigerant (2) Evacuate air and charge proper amount of purified refrigerant
6	When air conditioning is turned off, refrigerant foams and then stays clear	Correct	–

* Bubbles in the sight glass with ambient temperatures higher than usual can be considered normal if cooling is sufficient.

AC

REFRIGERANT CHARGE VOLUME

AC00H–0W

Specified amount:
600 ± 50 g (21.16 ± 1.76 oz.)

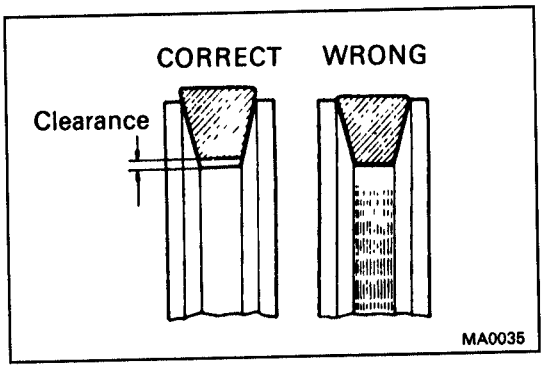

DRIVE BELT TENSION

AC1RF-02

DRIVE BELT TENSION INSPECTION

1. **INSPECT DRIVE BELT INSTALLATION CONDITION**
   Visually check drive belt for cracks, oiliness or wear.
   Check that the belt does not touch the bottom of the pulley groove.
   If necessary, replace the drive belt.

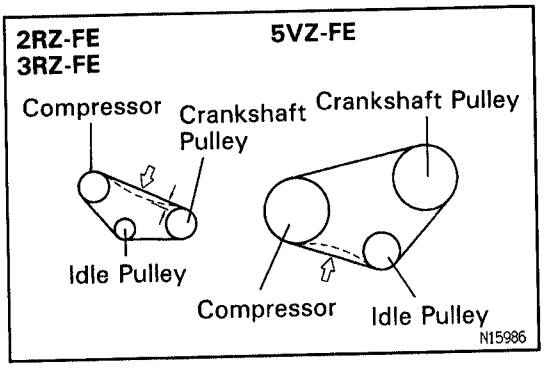

2. **INSPECT DRIVE BELT DEFLECTION**
   Using a belt tension gauge, check the drive belt tension.

   Belt tension gauge:

   Nippondenso BTG–20 (95506–00020) or
   Borroughs No. BT–33–73F

   Drive belt tension:

   New belt 160 ± 25 lbf
   Used belt 100 ± 20 lbf

   HINT:

   - "New belt" refers to a belt which has been used less than 5 minutes on a running engine.
   - "Used belt" refers to a belt which has been used on a running engine for 5 minutes or more.
   - After installing the drive belt, check that it fits properly in the ribbed grooves.

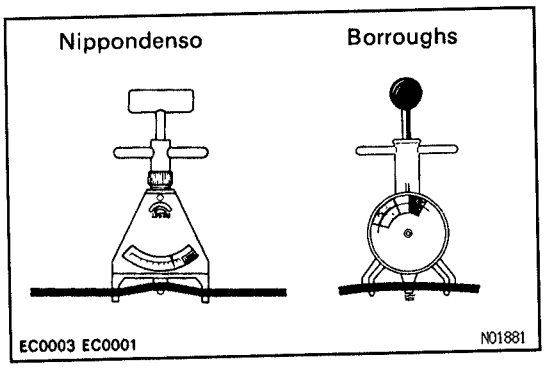

AC26M-01

DRIVE BELT REMOVAL

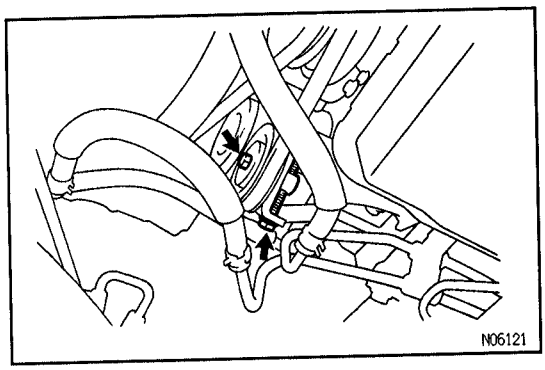

1. **REMOVE PS DRIVE BELT**
   (See SR section)
2. **REMOVE ENGINE UNDER COVER**
3. **LOOSEN IDLE PULLEY LOCK NUT**
   Torque: 39 N·m (400 kgf·cm, 29 ft·lbf)
4. **LOOSEN AND REMOVE COMPRESSOR DRIVE BELT**

AC26N-01

DRIVE BELT INSTALLATION

Installation is in the reverse order of removal.

AC

IDLE–UP SPEED

IDLE UP SPEED INSPECTION

AC1L0–03

1. **WARM UP ENGINE**
2. **SET VEHICLE IN THESE CONDITIONS:**
   - Blower switch high position
   - A/C switch on
   - Magnetic clutch on
3. **INSPECT IDLE–UP SPEED**

   Standard idle up speed:

   2RZ–FE, 3RZ–FE Engine:

   900 ± 50 rpm

   5VZ–FE Engine:

   850 ± 50 rpm

REFRIGERANT LINES

TIGHTENING TORQUE OF REFRIGERATION LINES

AC00L–0U

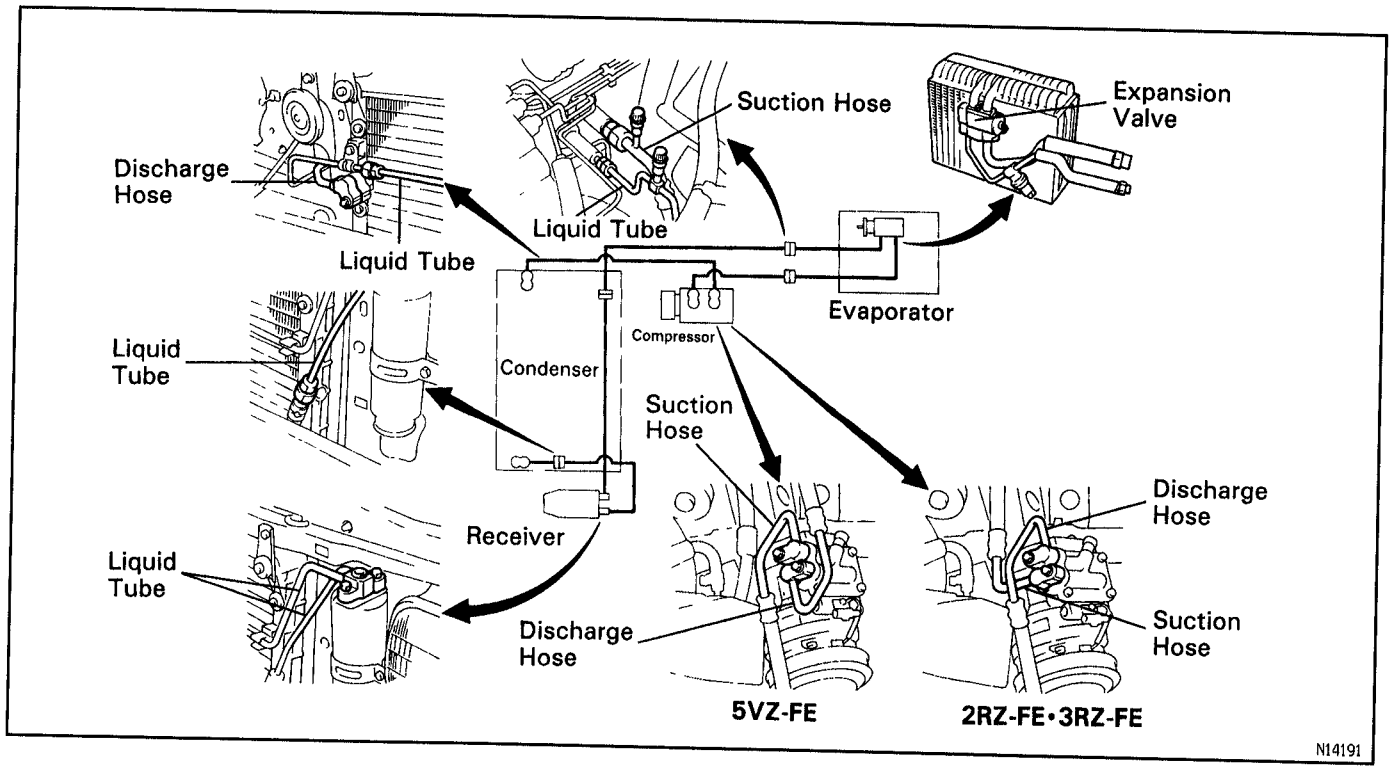

ON–VEHICLE INSPECTION

AC00M–0Z

1. **INSPECTION HOSE AND TUBE CONNECTIONS FOR LOOSENESS**
2. **INSPECT HOSES AND TUBES FOR LEAKAGE**

   Using a gas leak detector, check for leakage of refrigerant.

AC

AC1RG-03

REFRIGERANT LINES REPLACEMENT

1. **DISCHARGE REFRIGERANT FROM REFRIGERATION SYSTEM**
2. **REPLACE FAULTY TUBE OR HOSE**
   NOTICE: Cap the open fittings immediately to keep moisture or dirt out of the system.
3. **TORQUE CONNECTIONS TO SPECIFIED TORQUE**
   NOTICE: Connections should not be torqued tighter than the specified torqued.

   Receiver x Liquid tube
   Torque: 6.0 N·m (61 kgf·cm, 53 ft·lbf)

   Condenser x Discharge tube
   Torque: 10 N·m (100 kgf·cm, 7 ft·lbf)

   Condenser x Liquid tube
   Torque: 14 N·m (140 kgf·cm, 10 ft·lbf)

   Compressor x Discharge tube
   Torque: 10 N·m (100 kgf·cm, 7 ft·lbf)

   Compressor x Suction tube
   Torque: 10 N·m (100 kgf·cm, 7 ft·lbf)

   Cooling unit x Liquid tube
   Torque: 14 N·m (140 kgf·cm, 10 ft·lbf)

   Cooling unit x Suction tube
   Torque: 32 N·m (330 kgf·cm, 24 ft·lbf)

   Expansion valve x Evaporator
   Torque: 5.4 N·m (55 kgf·cm, 48 ft·lbf)

   Suction line
   Torque: 32 N·m (330 kgf·cm, 24 ft·lbf)

   Liquid line
   Torque: 14 N·m (140 kgf·cm, 10 ft·lbf)
4. **EVACUATE AIR IN REFRIGERATION SYSTEM AND CHARGE WITH REFRIGERANT**
   Specified amount:
   600 ± 50g (21.16 ± 1.76 oz.)
5. **INSPECT FOR LEAKAGE OF REFRIGERANT**
   Using a gas leak detector, check for leakage of refrigerant.
6. **INSPECT AIR CONDITIONING OPERATION**

AC

COOLING UNIT

COOLING UNIT REMOVAL

AC1RH–02

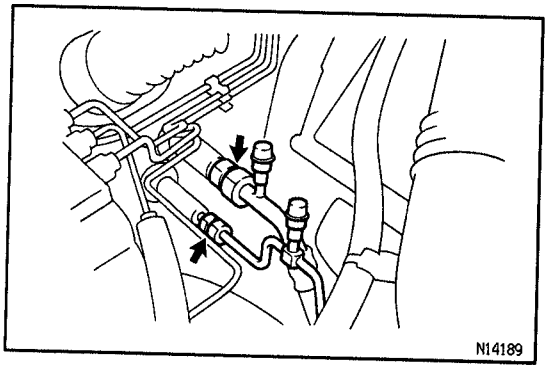

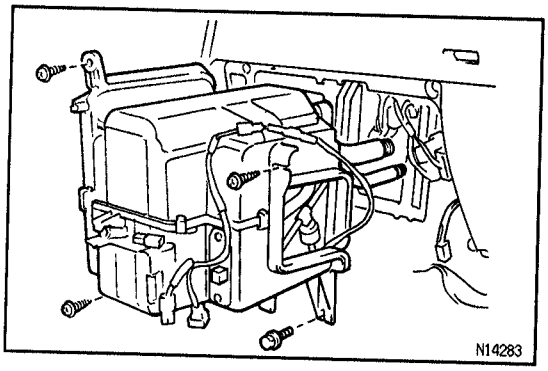

1. **DISCHARGE REFRIGERANT FROM REFRIGERATION SYSTEM**

   INSTALLATION HINT: Evacuate air from refrigeration system.

   Charge system with refrigerant and inspect for leakage of refrigerant.

   Specified amount:

   600 ± 50 g (21.16 ± 1.76 oz.)

2. **DISCONNECT SUCTION TUBE AND LIQUID TUBE FROM COOLING UNIT FITTINGS**

   Torque:

   Liquid tube: 14 N·m (140 kgf·cm, 10 ft·lbf)

   Suction tube: 32 N·m (330 kgf·cm, 24 ft·lbf)

   REMOVAL NOTICE: Cap the open fittings immediately to keep moisture or dirt out of the system.

   INSTALLATION HINT: Lubricate 2 new O–rings with compressor oil and install the tubes.

3. **REMOVE 2 GROMMETS**
4. **REMOVE DRAIN PIPE GROMMET**
5. **REMOVE GLOVE COMPARTMENT PARTS (See page BO–27)**
6. **REMOVE COOLING UNIT**

(a) Disconnect the connectors.

(b) Remove the 3 screws, bolt and the cooling unit.

COOLING UNIT DISASSEMBLY

AC1RJ–02

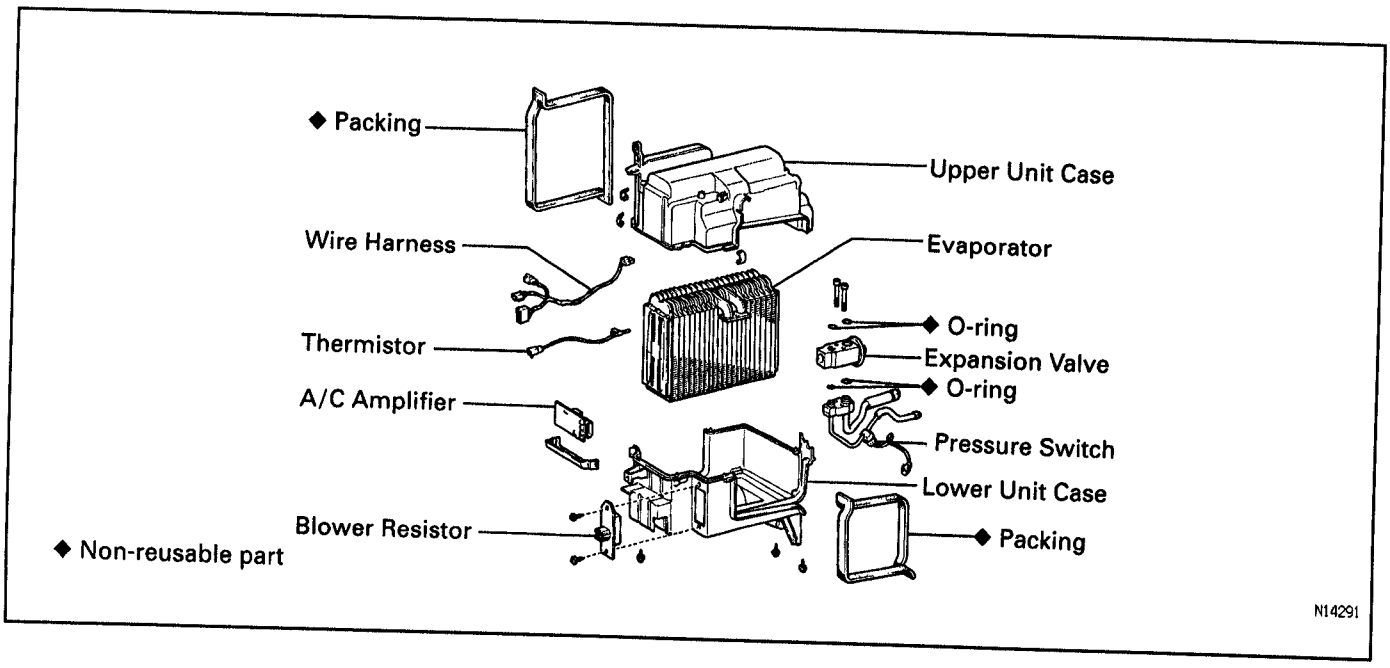

AC

1. **REMOVE THESE PARTS**
(a) A/C amplifier.
(b) Wire harness.
2. **REMOVE BLOWER RESISTOR**
Remove the 2 screws and blower resistor.
3. **SEPARATE UPPER AND LOWER UNIT CASE**
(a) Using a knife, cut off the each packing.
(b) Remove 3 clips and 3 screws.
(c) Separate the upper and lower unit case.
4. **REMOVE EVAPORATOR FROM LOWER UNIT CASE**
ASSEMBLY HINT: If evaporator was replaced, add compressor oil to compressor.
Add 40 — 50 cc (1.4 —1.7 fl.oz.)
Compressor oil:
ND—OIL 8 or equivalent
5. **REMOVE THERMISTOR**
Pull out the thermistor from evaporator.
6. **REMOVE PRESSURE SWITCH**
ASSEMBLY HINT: Lubricate a new O—ring with compressor oil and install the switch.
7. **REMOVE EXPANSION VALVE**
Using a hexagon wrench, remove the 2 bolts and separate the expansion valve and evaporator.
Torque: 5.4 N·m (55 kgf·cm, 48 in.·lbf)
INSTALLATION HINT: Lubricate 4 new O—rings with compressor oil and install the tubes.

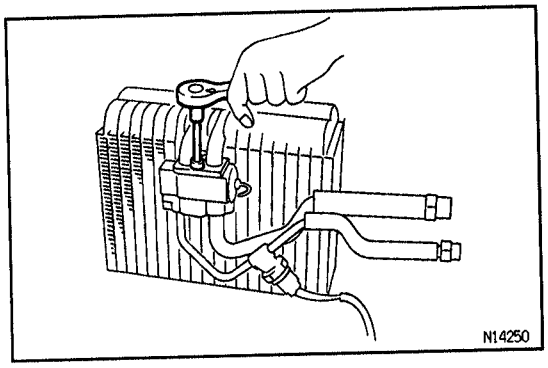

AC26P—01

COOLING UNIT ASSEMBLY

Assembly is in the reverse order of disassembly.

AC26Q—01

COOLING UNIT INSTALLATION

Installation is in the reverse order of removal.

AC

HEATER UNIT

AC26R—01

HEATER UNIT REMOVAL

1. **REMOVE COOLING UNIT**
(See page AC—23)
2. **DRAIN ENGINE COOLANT FROM RADIATOR**
REMOVAL HINT: It is not necessary to drain out all the coolant.

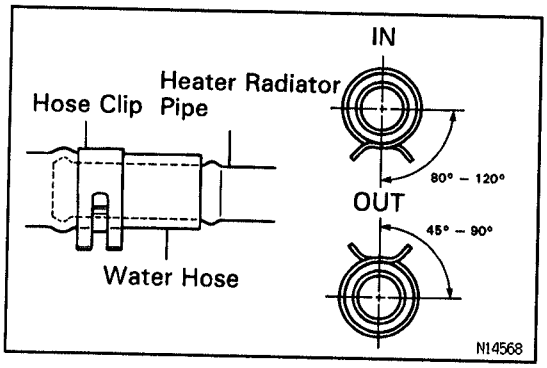

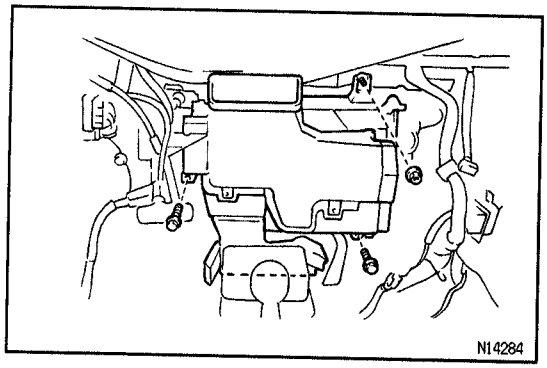

3. **DISCONNECT WATER HOSES FROM HEATER RADIATOR PIPES**

INSTALLATION HINT:

- Push the water hose onto the heater radiator pipe as far as the ridge on the pipe.
- Install the hose clip in a position, as shown in the illustration.

4. **REMOVE INSTRUMENT PANEL AND REINFORCEMENT**

(See page BO–27)

5. **REMOVE DEFROSTER DUCT HEATER TO REGISTER NO.4**

6. **REMOVE HEATER UNIT**

Remove the 2 bolts, the nut and the heater unit.

HEATER UNIT DISASSEMBLY

AC1RL–02

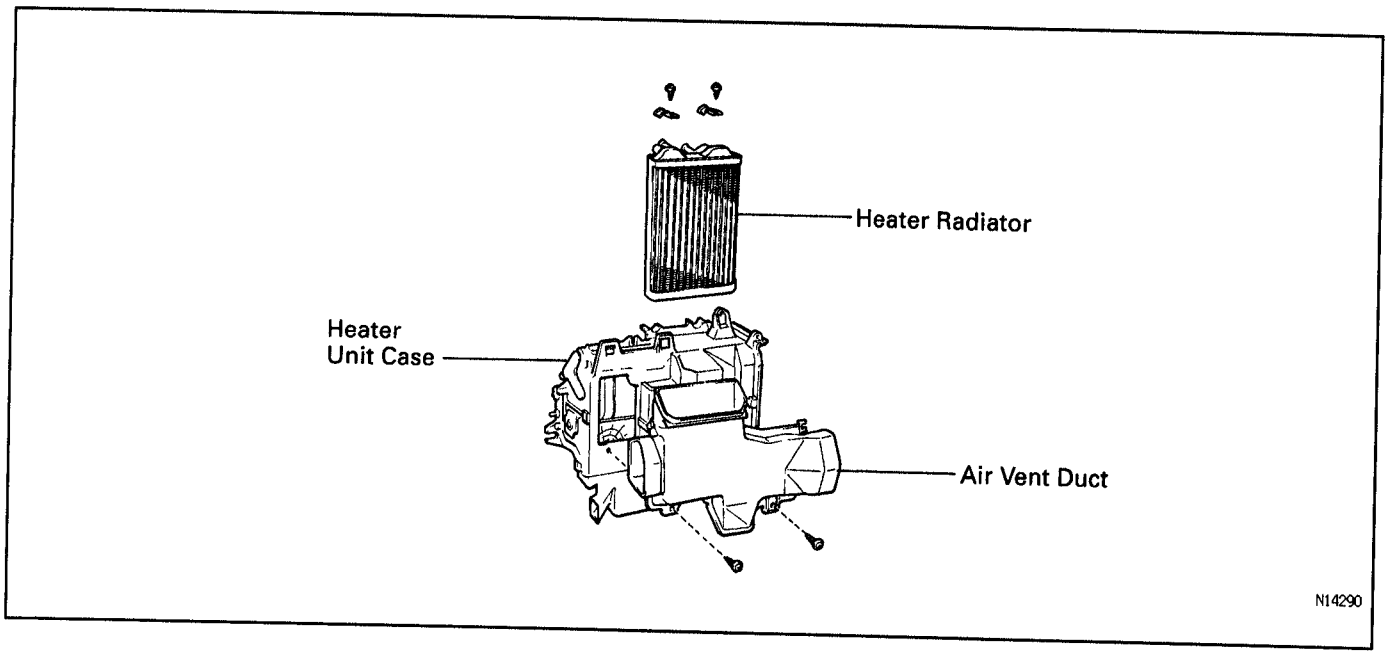

1. **REMOVE HEATER RADIATOR**

(a) Remove the 2 screws and 2 plates.

(b) Pull out the heater radiator.

2. **REMOVE AIR VENT DUCT**

Remove the 2 screws and duct.

HEATER UNIT ASSEMBLY

AC26S–01

Assembly is in the reverse order of disassembly.

AC

AC26T–01

HEATER UNIT INSTALLATION

Installation is in the reverse order of removal.

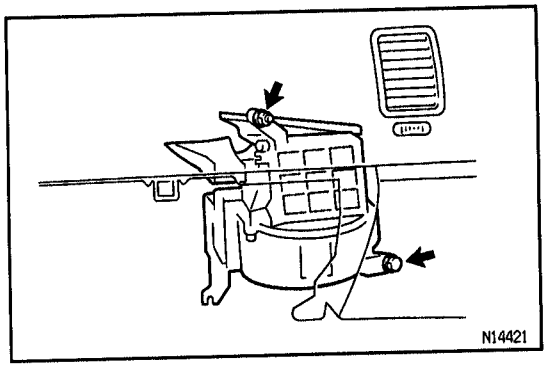

BLOWER UNIT

AC033–0C

BLOWER UNIT REMOVAL

1. **REMOVE GLOVE COMPARTMENT PARTS**
   (See page BO–27)
2. **REMOVE COOLING UNIT**
   (See page AC–23)
3. **REMOVE BLOWER UNIT**

(a) Disconnect the connector from the blower motor.

(b) Disconnect the air inlet damper control cable from the blower motor.
INSTALLATION HINT: For installing the control cable, refer to " HEATER CONTROL CABLES ADJUSTMENT".

(c) Remove the nut and bolt, and the blower unit.

AC1H8–05

BLOWER UNIT DISASSEMBLY

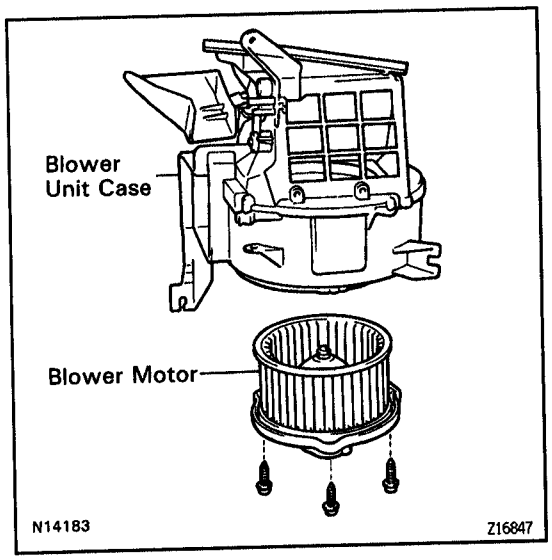

REMOVE BLOWER MOTOR
Remove the 3 screws and blower motor.

AC26U–01

BLOWER UNIT ASSEMBLY

Assembly is in the reverse order of disassembly.

AC26V–01

BLOWER UNIT INSTALLATION

Installation is in the reverse order of removal.

AC

COMPRESSOR

ON–VEHICLE INSPECTION

AC1RM–01

Magnetic Clutch:

1. **MAKE THESE VISUAL CHECKS:**

(a) Leakage of grease from the clutch bearing.

(b) Signs of oil on the pressure plate or rotor.

Repair or replace, as necessary.

2. **INSPECT MAGNETIC CLUTCH BEARING FOR NOISE**

(a) Start engine.

(b) Check for abnormal noise from near the compressor when the A/C switch is OFF.

If abnormal noise is being emitted, replace the magnetic clutch.

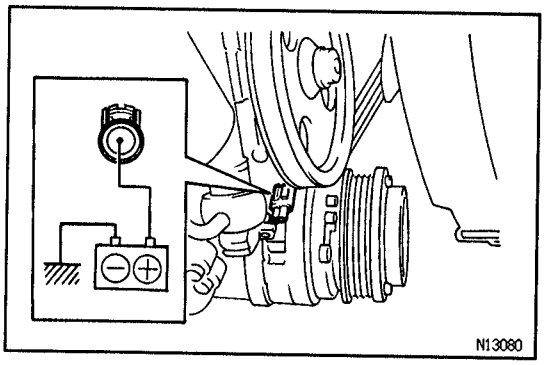

3. **INSPECT MAGNETIC CLUTCH**

(a) Disconnect the connector from the magnetic clutch.

(b) Connect the positive (+) lead from the battery to the terminal on the magnetic clutch connector and the negative (–) lead to the body ground.

(c) Check that the magnetic clutch is energized.

If operation is not as specified, replace the magnetic clutch.

Compressor:

1. **INSTALL MANIFOLD GAUGE SET**
(See page AC–8)
2. **START ENGINE**
3. **INSPECT COMPRESSOR FOR METALLIC SOUND**

Check if there is a metallic sound from the compressor when the A/C switch is on.

If metallic sound is heard, replace the compressor assembly.

4. **INSPECT PRESSURE OF REFRIGERATION SYSTEM**

See " REFRIGERANT SYSTEM INSPECTION WITH MANIFOLD GAUGE SET" on page AC–14

5. **STOP ENGINE**
6. **INSPECT VISUALLY FOR LEAKAGE OF REFRIGERANT FROM SAFETY SEAL**

If there is any leakage, replace the compressor assembly.

AC10M–05

COMPRESSOR REMOVAL

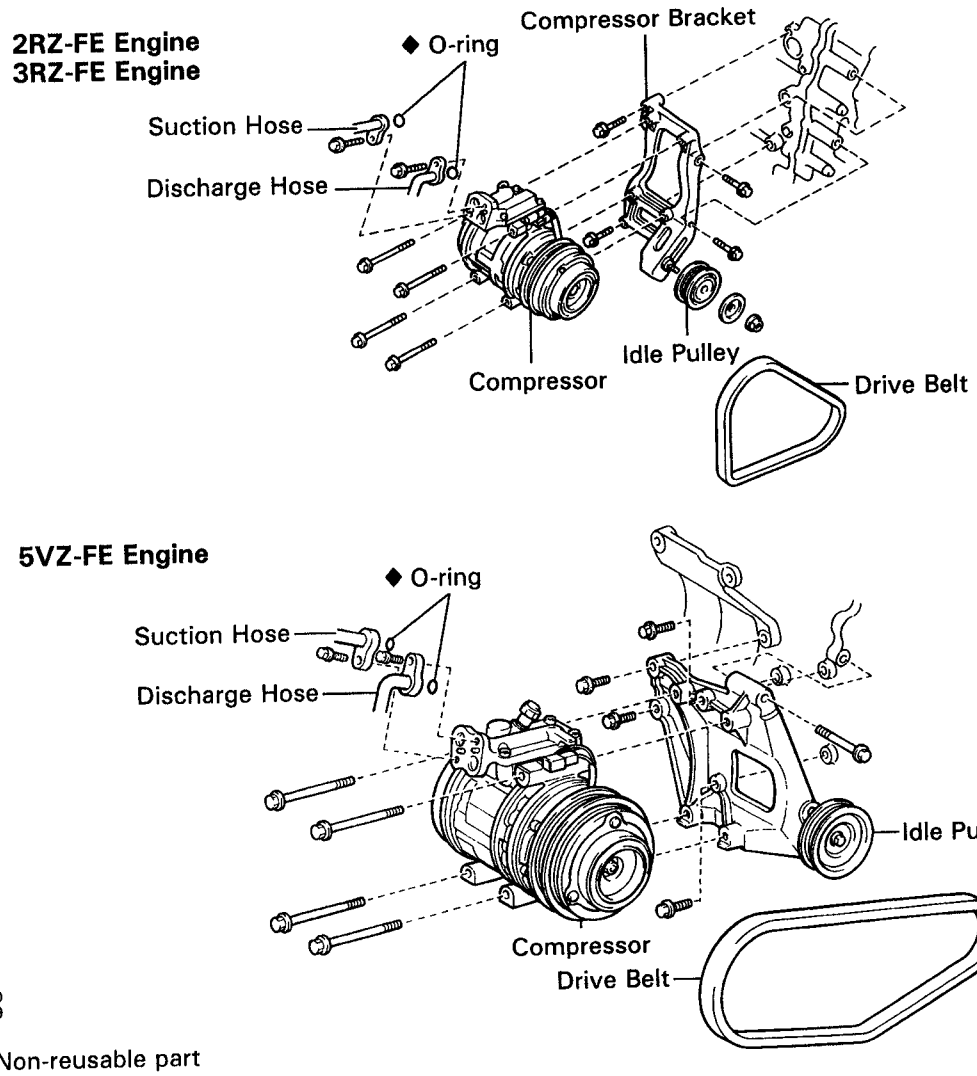

1. **RUN ENGINE AT IDLE SPEED WITH A/C ON FOR APPROX. 10 MINUTES WITH A/C ON**
2. **STOP ENGINE**
3. **DISCONNECT NEGATIVE (–) TERMINAL CABLE FROM BATTERY**
4. **DISCONNECT CLUTCH LEAD WIRE FROM WIRING HARNESS**
5. **DISCHARGE REFRIGERANT FROM REFRIGERATION SYSTEM**
6. **DISCONNECT 2 HOSES FROM COMPRESSOR SERVICE VALVES**

   NOTICE: Cap the open fitting immediately to keep moisture or dirt out of the system.
7. **REMOVE COMPRESSOR**

AC

(a) Remove the fan shroud.
(b) Loosen the drive belt.
(c) Remove the compressor mounting bolts and the compressor.

8. REMOVE COMPRESSOR BRACKET
2RZ–FE, 3RZ–FE Engine:
Remove the 4 bolts and compressor brakcet.
5VZ–FE Engine:
Remove the 5 bolts and compressor brakcet.

MAGNETIC CLUTCH DISASSEMBLY

AC1RN–01

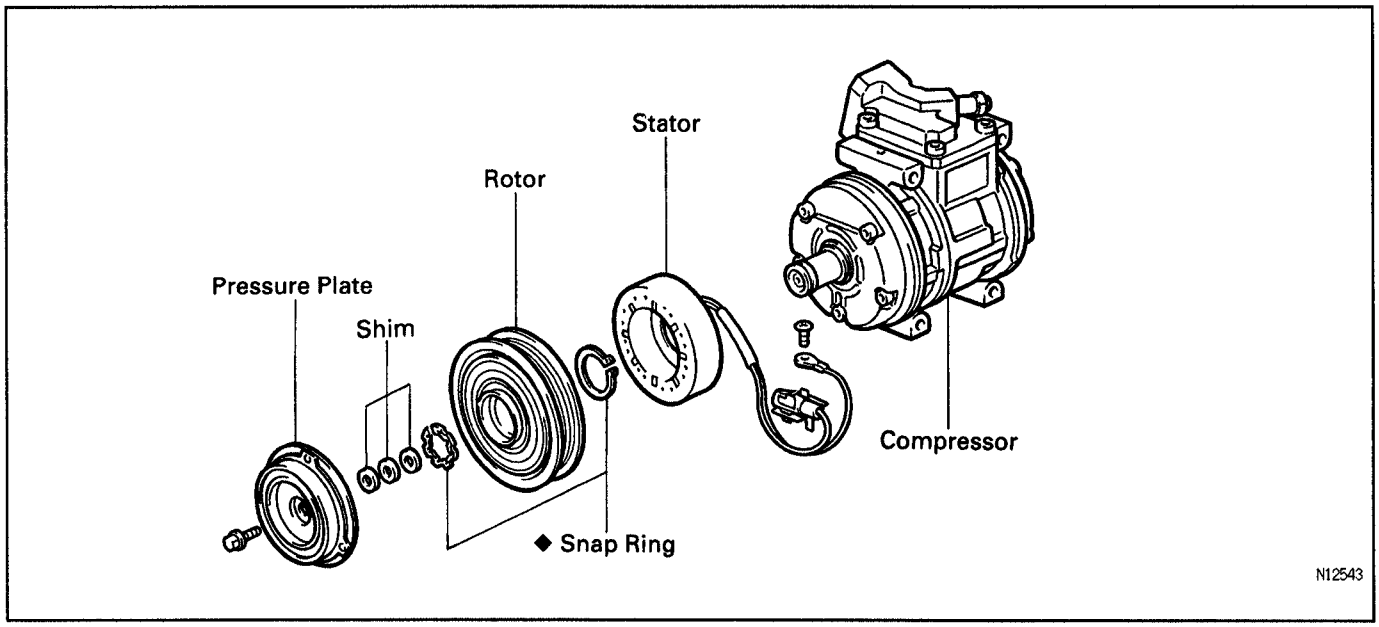

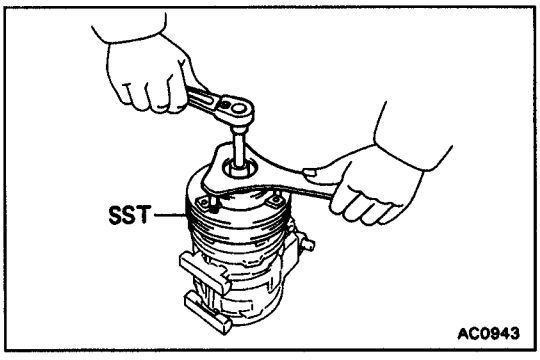

1. REMOVE PRESSURE PLATE
(a) Using SST and socket wrench, remove the shaft bolt.
Torque: 14 N·m (140 kgf·cm, 10 ft·lbf)
SST 07112–76060

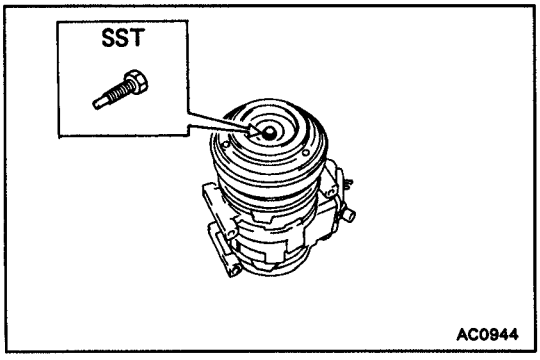

(b) Install a SST on the pressure plate.
SST 07112–66040

AC

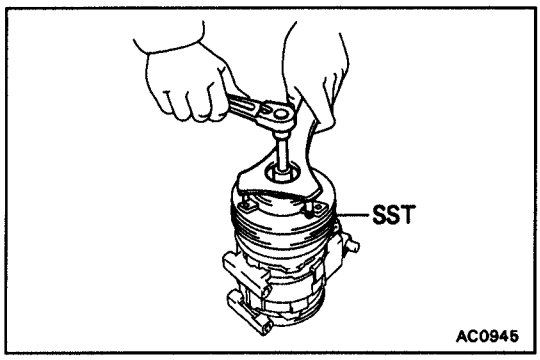

(c) Using SST and socket wrench, remove the pressure plate.
SST 07112–76060

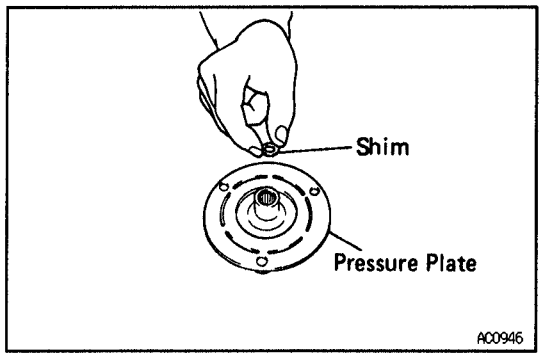

(d) Remove the shims from the pressure plate.

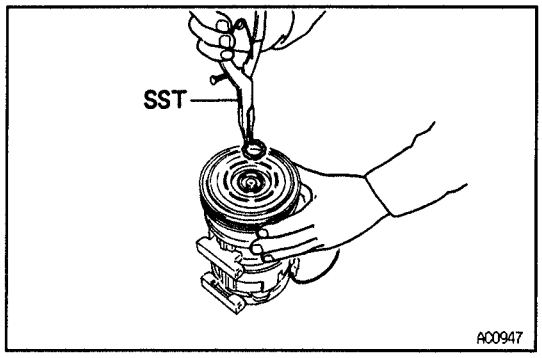

2. REMOVE ROTOR

(a) Using SST, remove the snap ring.
SST 07114–84020

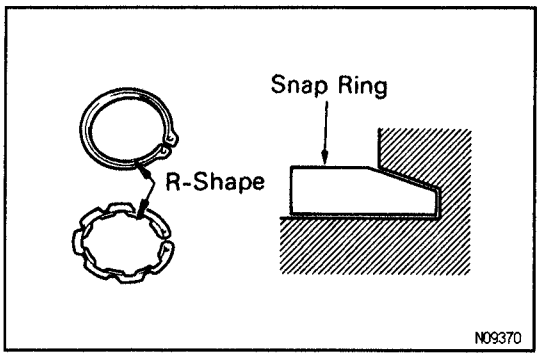

ASSEMBLY NOTICE: The snap ring should be installed so that its beveled side faces up.

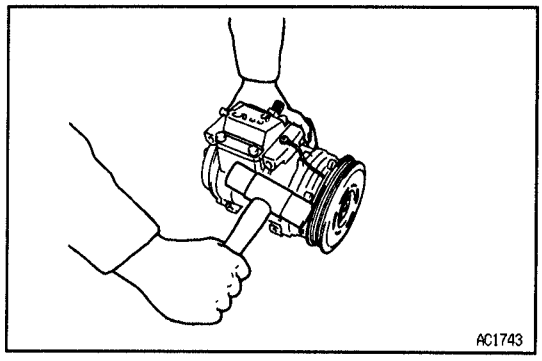

(b) Using a plastic hammer, tap the rotor off the shaft.
DISASSEMBLY NOTICE: Be careful not to damage the pulley when tapping on the rotor.

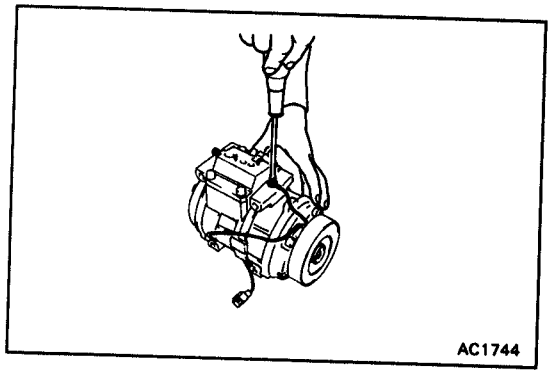

3. REMOVE STATOR

(a) Disconnect the stator lead wire from the compressor housing.

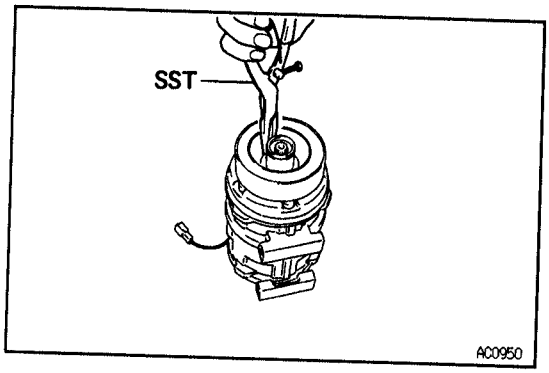

(b) Using SST, remove the snap ring.
SST 07114–84020

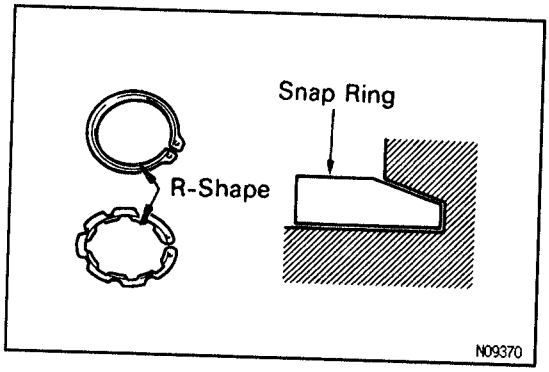

ASSEMBLY NOTICE: The snap ring should be installed so that its beveled side faces up.

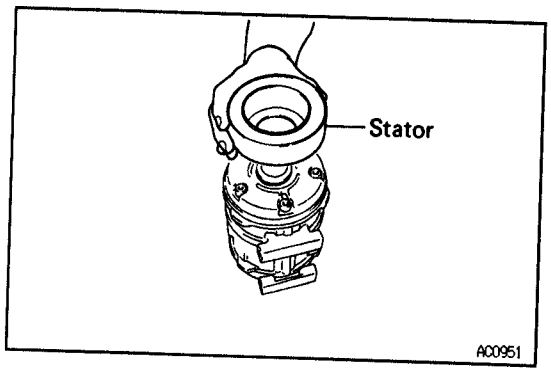

(c) Remove the stator.

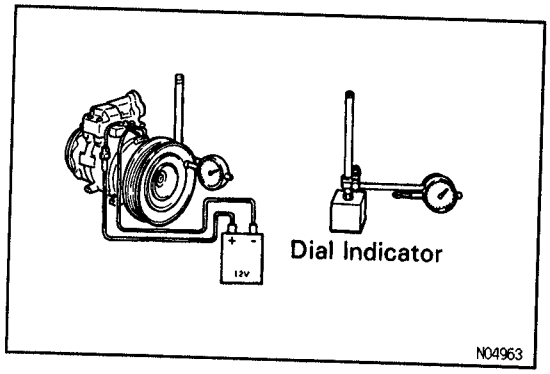

MAGNETIC CLUTCH ASSEMBLY

AC1RP–01

Assembly is in the reverse order of disassembly.

CHECK CLEARANCE OF MAGNETIC CLUTCH

(a) Set the dial indicator to the pressure plate of the magnetic clutch.

(b) Connect the magnetic clutch lead wire to the positive (+) terminal of the battery.

AC

(c) Check the clearance between the pressure plate and rotor when connecting the negative (–) terminal to the battery.

Standard clearance:

0.5 ± 0.15 mm (0.020 ± 0.0059 in.)

If the clearance is not within standard clearance, adjust the clearance using shims to obtain the standard clearance.

Shim Thickness:

0.1 mm (0.004 in.)
0.3 mm (0.012 in.)
0.5 mm (0.020 in.)

AC10N–06

COMPRESSOR INSTALLATION

1. **INSTALL COMPRESSOR BRACKET**
   Install the compressor bracket with the mounting bolts and nut.
   Torque:
   2RZ–FE, 3RZ–FE:
   Bolt: 48 N·m (489 kgf·cm, 35 ft·lbf)
   Pulley nut: 40 N·m (408 kgf·cm, 30 ft·lbf)
   5VZ–FE: 47 N·m (479 kgf·cm, 35 ft·lbf)
2. **INSTALL COMPRESSOR**
   Install the compressor with the 4 bolts.
   Torque: 25 N·m (250 kgf·cm, 18 ft·lbf)
3. **INSTALL AND INSPECT COMPRESSOR DRIVE BELT**
   (See page AC–20)
4. **CONNECT DISCHARGE HOSE AND SUCTION HOSE TO COMPRESSOR**
   Torque: 10 N·m (100 kgf·cm, 7 ft·lbf)
   HINT: Lubricate 2 new O–rings with compressor oil and install the hoses.
5. **CONNECT MAGNETIC CLUTCH CONNECTOR**
6. **CONNECT NEGATIVE (–) TERMINAL CABLE TO BATTERY**
7. **CHARGE SYSTEM WITH REFRIGERANT AND INSPECT FOR LEAKAGE OF REFRIGERANT**
   Specified amount:
   600 ± 50 g (21.16 ± 1.76 oz.)

AC

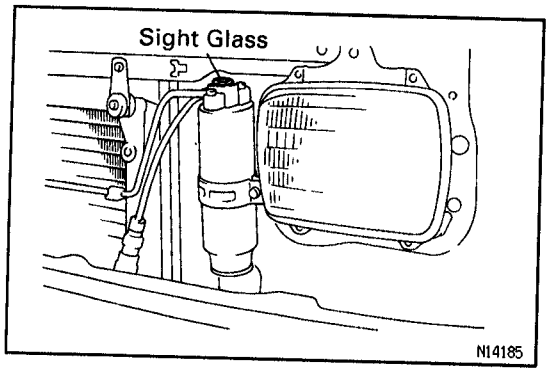

RECEIVER

AC1RQ–02

ON–VEHICLE INSPECTION

INSPECT FITTING FOR LEAKAGE

Using a gas leak detector, check for leakage.
If there is leakage, check the tightening torque at the joints.

RECEIVER REMOVAL

AC1RR–02

1. **DISCHARGE REFRIGERANT FROM REFRIGERATION SYSTEM**

INSTALLATION HINT: Evacuate air from refrigeration system.
Charge system with refrigerant and inspect for leakage of refrigerant.
Specified amount:
600 ± 50 g (21.16 ± 1.76 oz.)

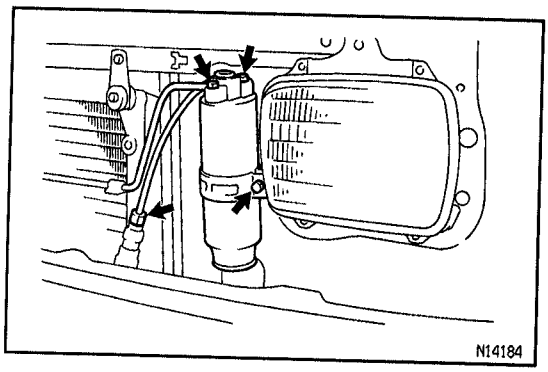

2. **DISCONNECT 2 LIQUID TUBES FROM RECEIVER**

(a) Remove the union nut from the condenser.
Torque: 14 N·m (140 kgf·cm, 10 ft·lbf)

(b) Remove the 2 bolts from receiver.
Torque: 6.0 N·m (60 kgf·cm, 52 in.·lbf)

INSTALLATION HINT: Lubricate 3 new O–rings with compressor oil to the compressor.
REMOVAL NOTICE: Cap the open fitting immediately to keep moisture or dirt out of system.

3. **REMOVE RECEIVER FROM RECEIVER HOLDER**

Remove the holder bolt and pull the receiver upward from the holder.
INSTALLATION HINT: If receiver was replaced, add compressor oil to compressor.
Add 20 cc (0.71 fl.oz.)
Compressor oil:
ND–OIL 8 or equivalent

AC

RECEIVER INSTALLATION

AC26W–01

Installation is in the reverse order of removal.

CONDENSER

AC1RS–02

ON–VEHICLE INSPECTION

1. **INSPECT CONDENSER FINS FOR BLOCKAGE OR DAMAGE**
   If the fins are clogged, wash them with water and dry with compressed air.
   NOTICE: Be careful not to damage the fins.
   If the fins are bent straighten them with a screwdriver or pliers.
2. **INSPECT CONDENSER AND FITTINGS FOR LEAKAGE**
   Using a gas leak detector, check for leakage.
   If there is leakage, check the tightening torque at the joints.

AC26X–01

CONDENSER REMOVAL

1. **DISCHARGE REFRIGERANT FROM REFRIGERATION SYSTEM**
   INSTALLATION HINT: Evacuate air from refrigeration system.
   Charge system with refrigerant and inspect for leakage of refrigerant.
   Specified amount:
   600 ± 50 g (21.16 ± 1.76 oz.)
2. **REMOVE THESE PARTS:**
   - Radiator Grille
   - Hood Lock
   - Front Bumper Filler

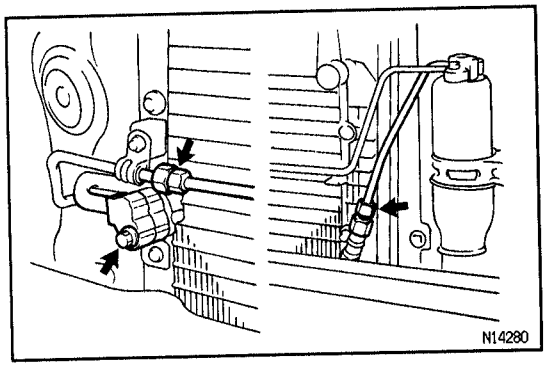

3. **DISCONNECT LIQUID TUBE AND DISCHARGE HOSE FROM CONDENSER FITTING**
   Torque:
   Discharge hose: 10 N·m (100 kgf·cm, 7 ft·lbf)
   Liquid tube: 14 N·m (140 kgf·cm, 10 ft·lbf)
   REMOVAL NOTICE: Cap open the fittings immediately to keep moisture out of the system.
   INSTALLATION HINT: Lubricate 2 new O–rings with compressor oil and install the tubes.
4. **REMOVE CONDENSER**
   Remove the 2 condenser mounting bolts and pull out the condenser.
   INSTALLATION HINT: If condenser was replaced, add compressor oil to the compressor.
   Add 40 – 50 cc (1.4 – 1.7 fl.oz.)
   Compressor oil:
   ND–OIL 8 or equivalent

AC

CONDENSER INSTALLATION

AC28Y-01

Installation is in the reverse order of removal.

EVAPORATOR

EVAPORATOR INSPECTION

AC013-0C

1. CHECK EVAPORATOR FINS FOR BLOCKAGE
   If the fins are clogged, clean them with compressed air.
   NOTICE: Never use water to clean the evaporator.
2. CHECK FITTINGS FOR CRACKS OR SCRATCHES
   Repair as necessary.

EVAPORATOR REMOVAL AND INSTALLATION

AC1KR-02

(See page AC–23)

HEATER RADIATOR

HEATER RADIATOR REMOVAL AND INSTALLATION

AC1RT-01

(See page AC–25)

HEATER RADIATOR INSPECTION

AC1L8-02

INSPECT FINS FOR BLOCKAGE
If the fins are clogged, clean them with compressed air.

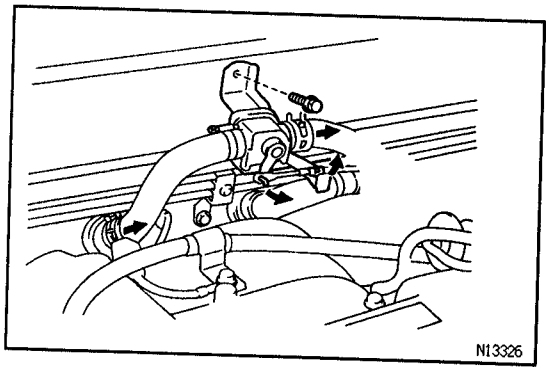

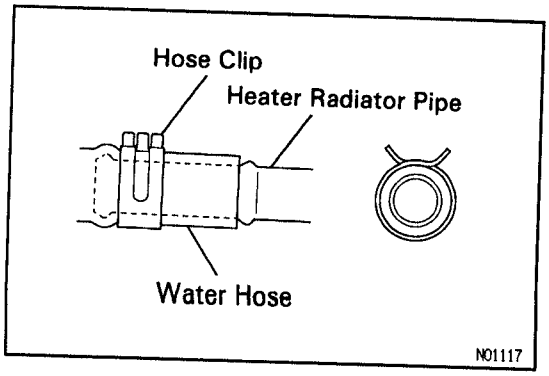

WATER VALVE

WATER VALVE REMOVAL

AC1L9-04

1. DRAIN ENGINE COOLANT FROM RADIATOR
   REMOVAL HINT: It is not necessary to drain out all the coolant.
2. DISCONNECT WATER VALVE CONTROL CABLE
   INSTALLATION HINT: For installing the control cable, refer to "HEATER CONTROL CABLES ADJUSTMENT"
3. DISCONNECT WATER HOSE
4. REMOVE WATER VALVE

(a) Disconnect the water hose from the heater radiator pipe.

(b) Remove the bolt and the water valve.
INSTALLATION HINT:

- Push the water hose onto the heater radiator pipe as far as the ridge on the pipe.
- Install the hose clip in a position as shown in the illustration.

AC

AC26Z-01

WATER VALVE INSTALLATION

Installation is in the reverse order of removal.

EXPANSION VALVE ON–VEHICLE INSPECTION

AC0JA-07

1. **CHECK QUANTITY OF GAS DURING REFRIGERATION CYCLE**
2. **INSTALL MANIFOLD GAUGE SET**
3. **RUN ENGINE**
   Run the engine at 1,500 rpm for at least 5 minutes. Then check that the high pressure reading is 1.37 – 1.57 MPa (14 – 16 kgf/cm², 199 – 228 psi).
4. **CHECK EXPANSION VALVE**
   If the expansion valve is faulty, the low pressure reading will drop to 0 kPa (0 kgf/cm², 0 psi).
   HINT: When the low pressure drops to 0 kPa (0 kgf/cm², 0 psi), feel the receiver's IN and OUT sides for zero temperature difference.

AC270-01

EXPANSION VALVE REMOVAL AND INSTALLATION

(See page AC–23)

VACUUM SWITCHING VALVE (VSV)

AC271-01

VSV INSPECTION

1. **REMOVE VSV**

(a) Disconnect the vacuum hoses and the connector from the VSV.

(b) Remove the bolt and the VSV.

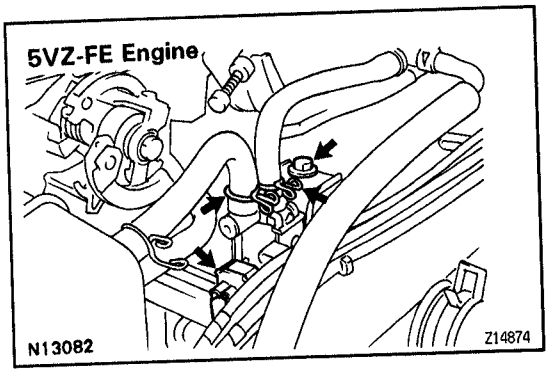

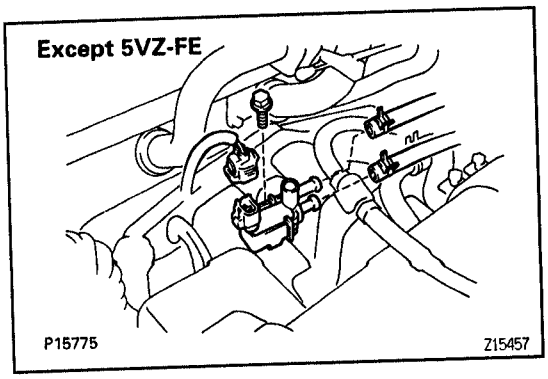

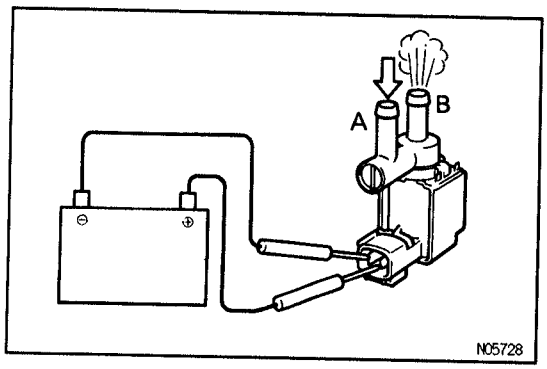

2. CHECK VACUUM CIRCUIT CONTINUITY IN VSV BY BLOWING AIR INTO PIPES

(a) Connect the VSV terminals to the battery terminals, as shown in the illustration.

(b) Blow into pipe "A" and check that air comes out of pipe "B".

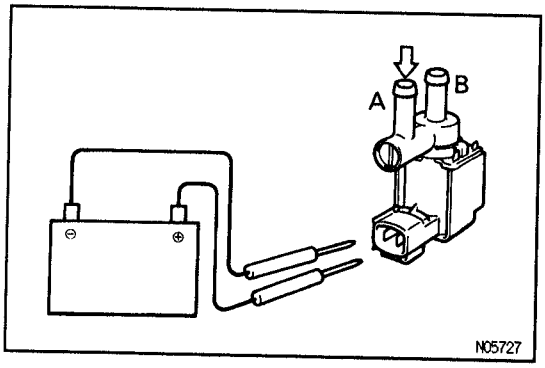

(c) Disconnect the battery.

(d) Blow into pipe "A" and check that air does not come out of pipe "B".

If a problem is found, replace the VSV.

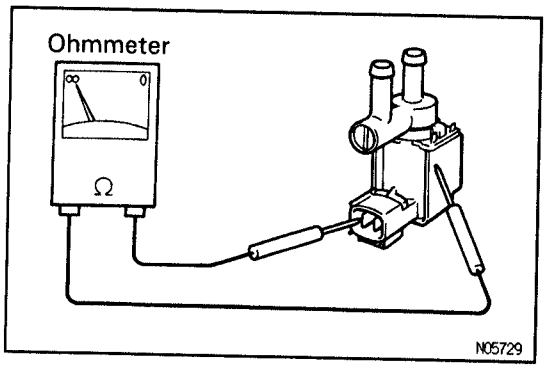

3. CHECK FOR SHORT CIRCUIT

Using an ohmmeter, check that there is no continuity between either terminals and the VSV body.

If there is continuity, replace the VSV.

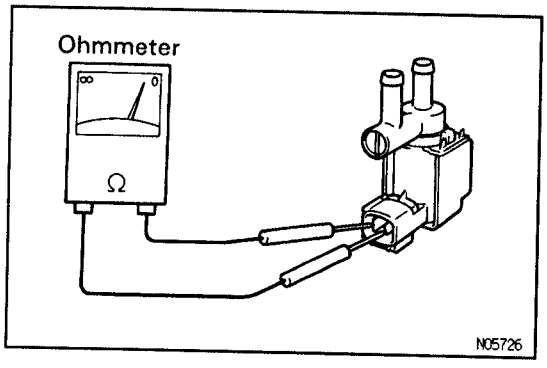

4. CHECK FOR OPEN CIRCUIT

Using an ohmmeter, measure resistance between the 2 terminals.

Standard resistance:

30 – 34 Ω at 20°C (68°F)

If resistance value is not as specified, replace the VSV.

BLOWER MOTOR

AC0WQ-04

BLOWER MOTOR REMOVAL AND INSTALLATION

(See page "BLOWER UNIT" AC–26)

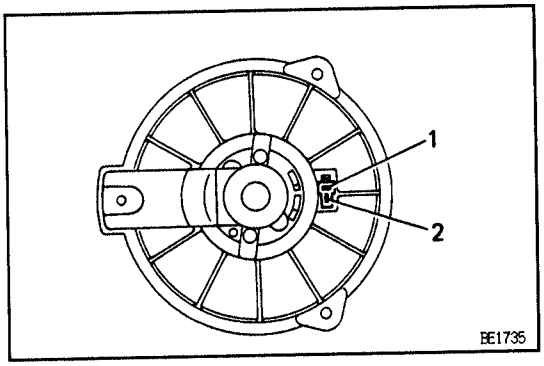

AC0SN-05

MOTOR INSPECTION

INSPECT BLOWER MOTOR OPERATION

Connect the positive (+) lead from the battery to terminal 1 and the negative (–) lead to terminal 2, then check that the motor operation is smooth.

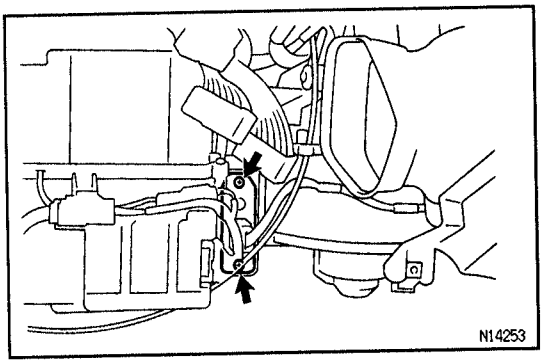

BLOWER RESISTOR

AC0FX-06

BLOWER RESISTOR REMOVAL

1. REMOVE GROVE COMPARTMENT PARTS
   (See page BO–27)
2. REMOVE BLOWER RESISTOR

(a) Disconnect the connector.
(b) Remove the 2 screws and the blower resistor.

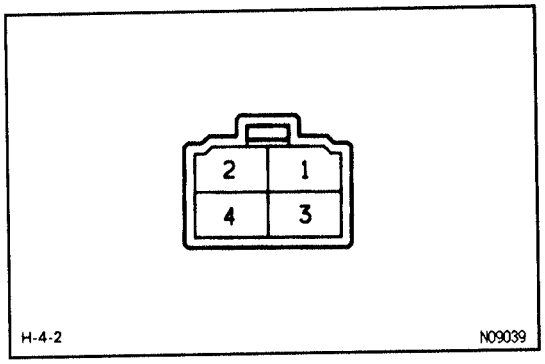

AC0FY-06

BLOWER RESISTOR INSPECTION

INSPECT BLOWER RESISTOR CONTINUITY

Condition	Tester connection	Specified condition
Constant	1 – 2 – 3 – 4	Continuity

If continuity is not as specified, replace the blower resistor.

AC272-01

BLOWER RESISTOR INSTALLATION

Installation is in the reverse order of removal.

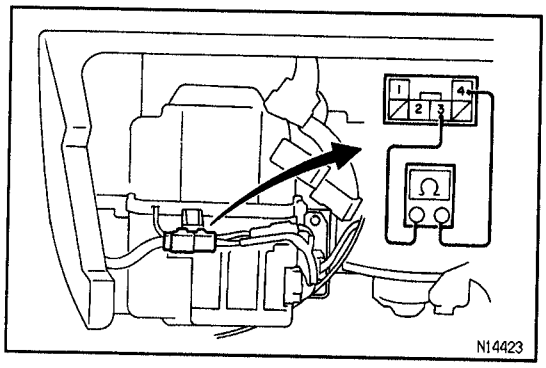

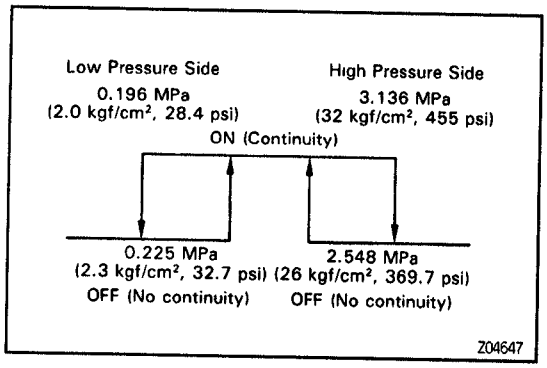

PRESSURE SWITCH

ON–VEHICLE INSPECTION

AC0L1–0C

1. **INSTALL MANIFOLD GAUGE SET**
   (See page AC–8)
2. **REMOVE GLOVE COMPARTMENT DOOR**
   Remove the 2 screws and the glove compartment door.
3. **DISCONNECT CONNECTOR FROM PRESSURE SWITCH**
4. **RUN ENGINE AT APPROX. 1,500 RPM**
5. **INSPECT PRESSURE SWITCH OPERATION**
   Check continuity between 3 and 4 terminals when refrigerant pressure is changed, as shown, in the illustration.
   If operation is not as specified, replace the pressure switch.
6. **STOP ENGINE AND REMOVE MANIFOLD GAUGE SET**
7. **CONNECT CONNECTOR TO PRESSURE SWITCH**
8. **INSTALL GLOVE COMPARTMENT DOOR**
   Install the glove compartment door with the 2 screws.

PRESSURE SWITCH REMOVAL AND INSTALLATION

AC0L2–06

(See "COOLING UNIT" on page AC–23)

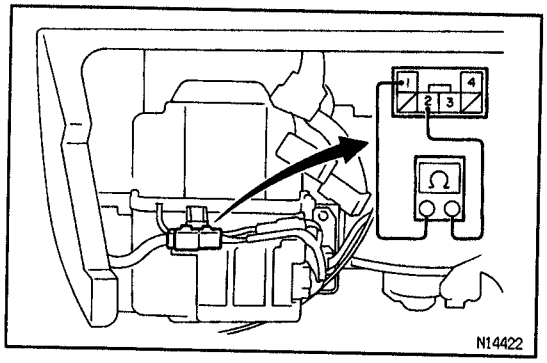

THERMISTOR

ON–VEHICLE INSPECTION

AC1KU–04

1. **REMOVE GLOVE COMPARTMENT DOOR**
   Remove the 2 bolts and the glove compartment door.
2. **DISCONNECT CONNECTOR OF THERMISTOR**
3. **CHECK RESISTANCE OF THERMISTOR**
   Measure resistance between 1 and 2 terminals.
   Standard resistance:
   1,500 Ω at 25 °C (77°F)
   If resistance is not as specified, replace the thermistor.

AC

THERMISTOR REMOVAL AND INSTALLATION

AC1KV–02

(See page AC–23)

AC1KW-04

THERMISTOR INSPECTION

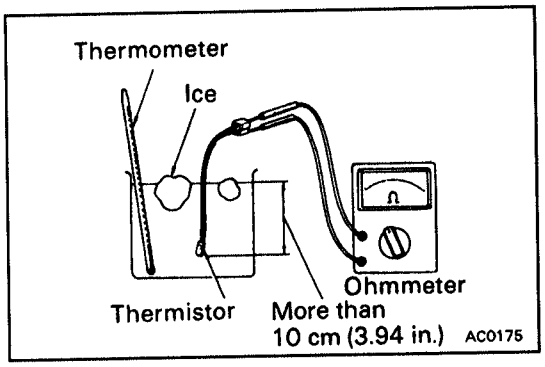

INSPECT THERMISTOR RESISTANCE

(a) Place the thermistor in cold water, and while changing the temperature of the water, measure resistance at the connector and at the same time, measure temperature of the water with a thermometer.

(b) Compare the 2 readings on the chart.
If resistance value is not as specified, replace the thermistor.

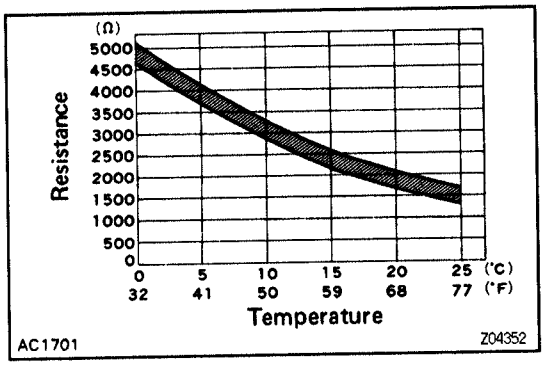

RELAY

AC273-01

RELAY INSPECTION

1. REMOVE RELAY

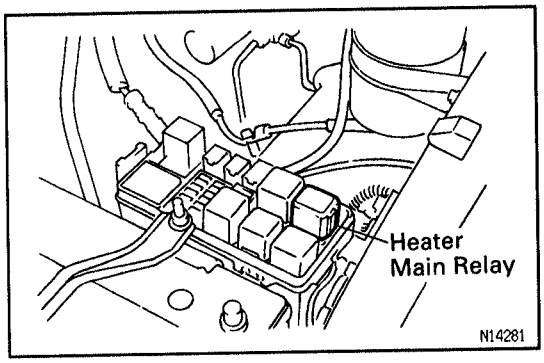

2. INSPECT HEATER MAIN RELAY CONTINUITY

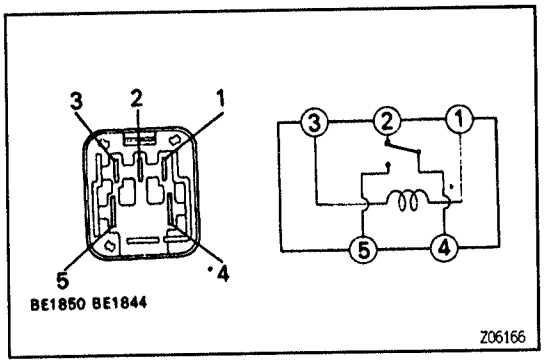

Condition	Tester connection	Specified condition
Constant	1 – 3 2 – 4	Continuity
Apply B+ between terminals 1 and 3.	4 – 5	Continuity

If continuity is not as specified, replace the relay.

AIR CONDITIONING CONTROL ASSEMBLY

AC0L6-06

ON–VEHICLE INSPECTION

INSPECT A/C CONTROL LEVERS OPERATION

Move the control levers to left and right, and check for stiffness and binding through the full range of the levers.

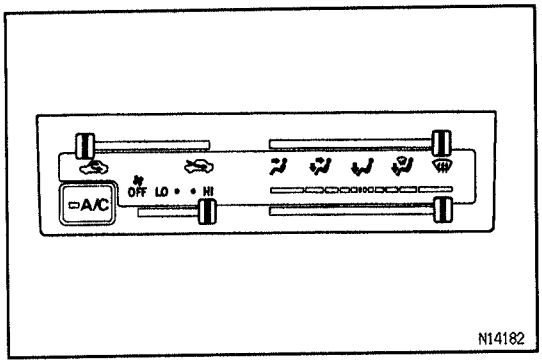

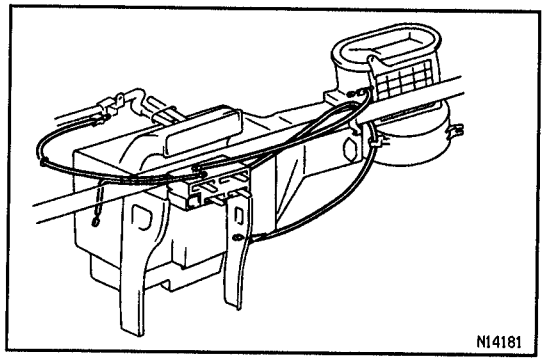

A/C CONTROL ASSEMBLY REMOVAL AC1L8-03

1. DISCONNECT HEATER CONTROL CABLES

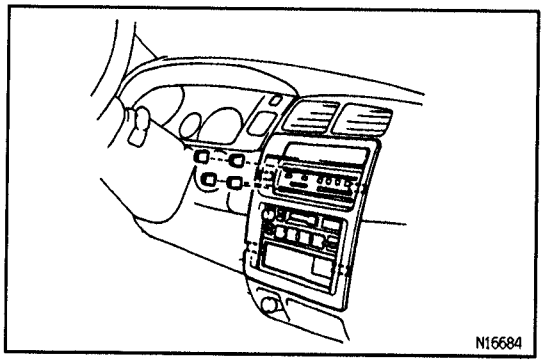

2. REMOVE THESE PARTS:
(a) Heater control knobs
(b) A/C switch
(c) A/C control panel

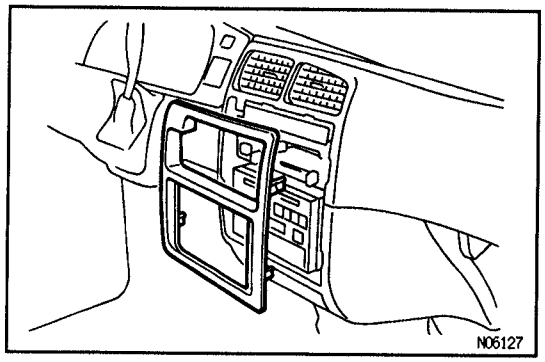

3. REMOVE INSTRUMENT PANEL CENTER LOWER FINISH PANEL

4. REMOVE A/C CONTROL ASSEMBLY
Remove the 3 screws and A/C control assembly then disconnect the the connector.

A/C CONTROL ASSEMBLY INSPECTION AC274-01

1. INSPECT BLOWER SPEED CONTROL SWITCH CONTINUITY

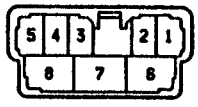

SH-8-2

Terminal / Switch position	1	2	5	6	8	Illumination 3	Illumination 4
OFF							
LO			○	○			
o (M1)	○		○	○		○ (M) ○	
○ (M2)		○	○	○			
H1			○	○	○		

V01960

If continuity is not as specified, replace the blower speed control switch.

AC

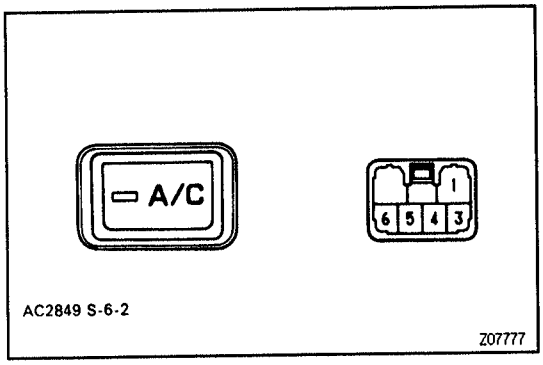

2. INSPECT A/C SWITCH CONTINUITY

Condition/ Circuit	Tester connection	Specified condition
A/C switch OFF	–	No continuity
A/C switch ON	4 – 5 4 – 6	Continuity
Illumination	1 – 3	Continuity

If continuity is not as specified, replace the A/C switch.

AC275-01

SWITCHES REMOVAL

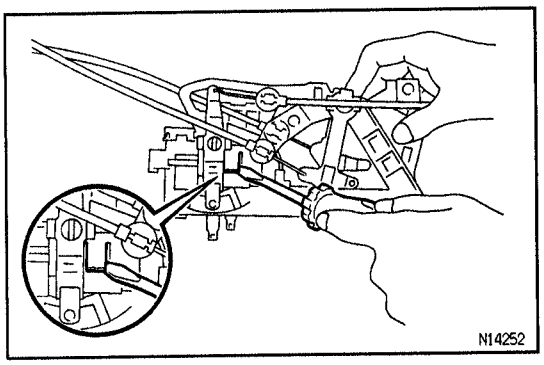

1. REMOVE BLOWER SPEED CONTROL SWITCH

(a) Remove the illumination light from the heater control assembly.

(b) Using a screwdriver, pry loose the clip and push out the blower speed control switch to rear of the heater control assembly.
REMOVAL HINT: Tape the screwdriver tip before use.

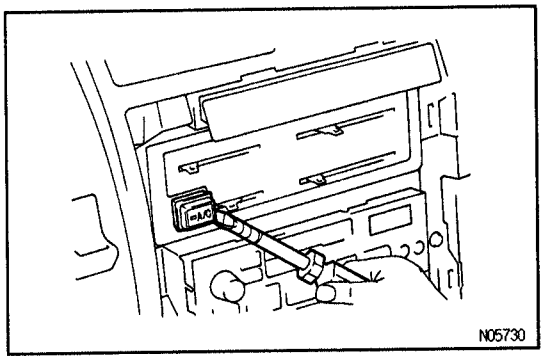

2. REMOVE A/C SWITCH

Using a screw driver, pry loose the clip and remove the A/C switch.
REMOVAL HINT: Tape the screwdriver tip before use.

AC276-01

SWITCHES INSTALLATION

Installation is in the reverse order of removal.

AC277-01

A/C CONTROL ASSEMBLY INSTALLATION

Installation is in the reverse order of removal.

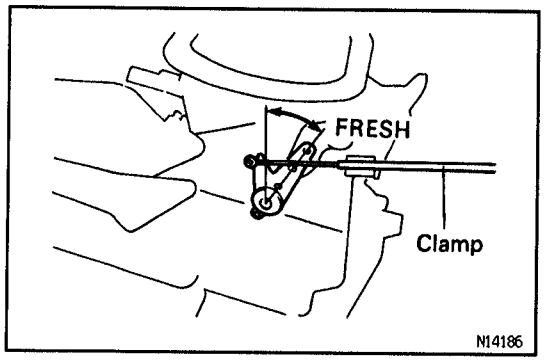

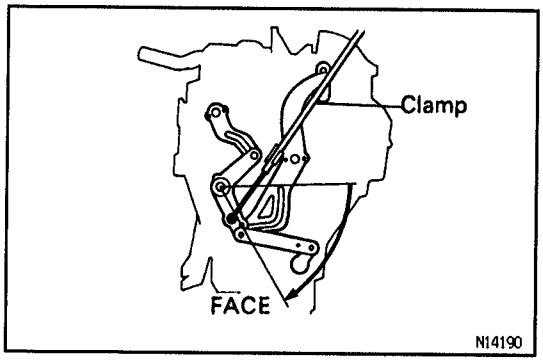

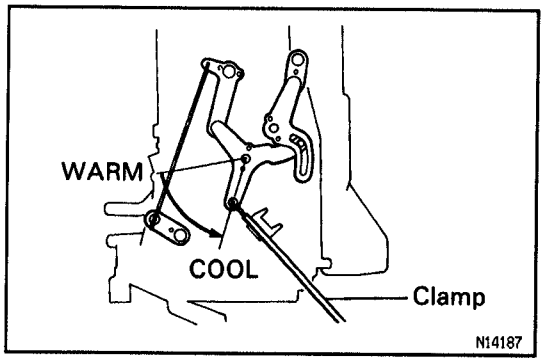

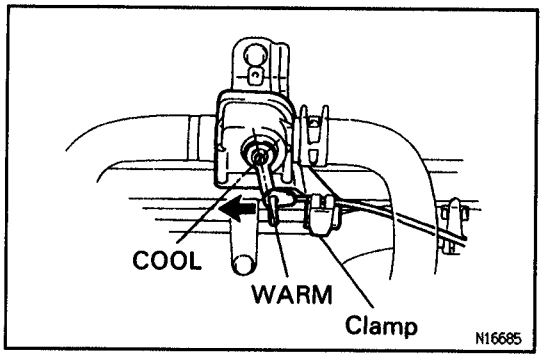

AC278-03

HEATER CONTROL CABLES ADJUSTMENT

1. **SET A/C CONTROL LEVERS IN THESE CONDITIONS:**

(a) Air inlet control lever "FRESH" position.
(b) Mode control lever "FACE" position
(c) Temperature control lever "COOL" position.

2. **ADJUST AIR INLET DAMPER CONTROL CABLE**
Set the air inlet damper on "FRESH" position, install the control cable and lock the clamp.

3. **ADJUST MODE DAMPER CONTROL CABLE**
Set the mode damper on "FACE" position, install the control cable and lock the clamp.

4. **ADJUST AIR MIX DAMPER CONTROL CABLE**
Set the air mix damper on "WARM" position, install the control cable and lock the clamp.

5. **ADJUST WATER VALVE CONTROL CABLE**
Set the water valve on "WARM" position, install the control cable and lock the clamp.

Wire harness side

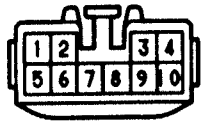

e-10-1 Z15513

AIR CONDITIONING AMPLIFIER

AC0LD-07

ON-VEHICLE INSPECTION

INSPECT AMPLIFIER CIRCUIT

(a) Disconnect the amplifier connector and inspect the connector on wire harness side, as shown in the chart below.

Test conditions:

- Ignition switch ON
- Temperature control lever MAX COOL
- Blower control lever HI
- A/C switch ON

Tester connection	Condition	Specified condition
4 — Ground	Constant	Continuity
3 — ECM terminal ACT	Constant	Continuity
8 — ECM terminal AC1	Constant	Continuity
9 — Ground	Constant	40 Ω at 25 °C (77 °F)
2 — 10	Constant	1.5 kΩ at 25 °C (77 °F)
5 — Ground	A/C switch ON	Battery positive voltage
5 — Ground	A/C switch OFF	No voltage

If circuit is as specified, try replacing the amplifier with a new one. If the circuit is not as specified, inspect the circuits connected to other parts.

From back side

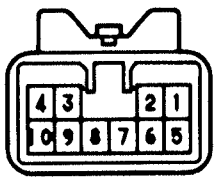

e-10-2 Z15514

(b) Connect the connector to A/C amplifier and inspect wire harness side connector from the back side, as shown.

Test conditions:

- Ignition switch ON
- A/C switch ON
- Temperature control dial MAX COOL
- Blower control lever HI
- Install manifold gauge set

Tester connection	Condition	Specified condition
1 — Ground	Refrigerant pressure 196 — 3,410 kPa	Battery positive voltage
1 — Ground	Refrigerant pressure less than 196 kPa or more than 3,140 kPa	No voltage

If circuit is not as specified, replace the A/C amplifier.

AC

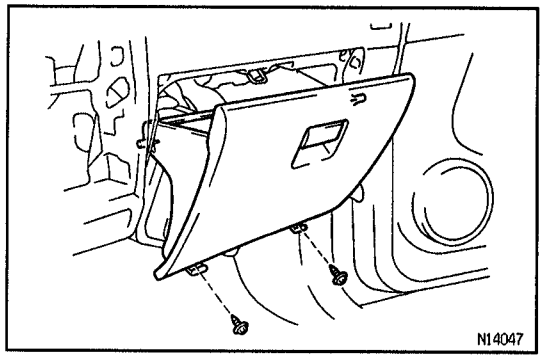

AMPLIFIER REMOVAL

AC1LC-03

1. REMOVE GLOVE COMPARTMENT DOOR

Remove the 2 screws and the glove compartment door.

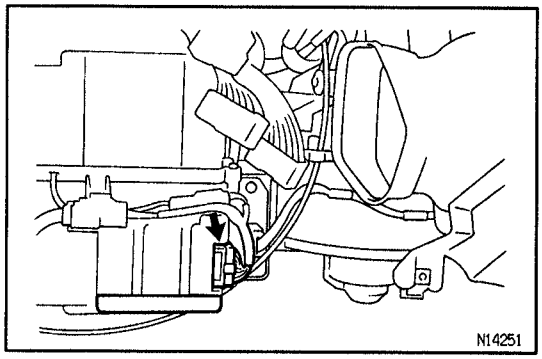

2. REMOVE A/C AMPLIFIER

(a) Disconnect the connector from the amplifier.
(b) Remove amplifier cover.
(c) Remove the amplifier from the cooling unit.

AMPLIFIER INSTALLATION

AC270-01

Installation is in the reverse order of removal.

SERVICE SPECIFICATIONS

SERVICE DATA

AC05J–0G

Refrigerant charge volume	600 ± 50 g (21.16 ± 1.76 oz.)
Drive belt tension	
New belt	160 ± 25 lbf
Used belt	100 ± 20 lbf
Idle up speed	–
2RZ–FE, 3RZ–FE	900 ± 50 rpm
5VZ–FE	850 ± 50 rpm
Magnetic clutch clearance	0.5 ± 0.15 mm (0.020 ± 0.0059 in.)

TORQUE SPECIFICATIONS

AC02A–0T

Part tightened	N·m	kgf·cm	ft·lbf
Compressor and Compressor Bracket x Engine	37	375	27
Compressor x Compressor bracket	25	250	18
Compressor bracket x Engine (2RZ–FE, 3RZ–FE)	48	489	35
Compressor bracket x Engine (5VZ–FE)	47	479	35
Idle pulley lock nut (2RZ–FE, 3RZ–FE)	40	408	30
Suction and Discharge hose x Compressor	10	100	7
Suction hose x A/C unit	32	330	24
Discharge tube x Condenser	10	100	7
Liquid tube x Receiver	6.0	60	52 in.·lbf
Liquid tube x Condenser	10	100	7
Liquid tube x A/C unit	14	140	10
Expansion valve x Evaporator	5.4	55	48in.·lbf
Expansion valve x Liquid tube	14	140	10